4–25–96
Vol. 61 No. 81
Pages 18229–18482

federal register

Thursday
April 25, 1996

Briefings on How To Use the Federal Register
For information on briefings in Washington, DC, see announcement on the inside cover of this issue.

FEDERAL REGISTER Published daily, Monday through Friday, (not published on Saturdays, Sundays, or on official holidays), by the Office of the Federal Register, National Archives and Records Administration, Washington, DC 20408, under the Federal Register Act (49 Stat. 500, as amended; 44 U.S.C. Ch. 15) and the regulations of the Administrative Committee of the Federal Register (1 CFR Ch. I). Distribution is made only by the Superintendent of Documents, U.S. Government Printing Office, Washington, DC 20402.

The Federal Register provides a uniform system for making available to the public regulations and legal notices issued by Federal agencies. These include Presidential proclamations and Executive Orders and Federal agency documents having general applicability and legal effect, documents required to be published by act of Congress and other Federal agency documents of public interest. Documents are on file for public inspection in the Office of the Federal Register the day before they are published, unless earlier filing is requested by the issuing agency.

The seal of the National Archives and Records Administration authenticates this issue of the Federal Register as the official serial publication established under the Federal Register Act. 44 U.S.C. 1507 provides that the contents of the Federal Register shall be judicially noticed.

The Federal Register is published in paper, 24x microfiche and as an online database through *GPO Access*, a service of the U.S. Government Printing Office. The online database is updated by 6 a.m. each day the Federal Register is published. The database includes both text and graphics from Volume 59, Number 1 (January 2, 1994) forward. Free public access is available on a Wide Area Information Server (WAIS) through the Internet and via asynchronous dial-in. Internet users can access the database by using the World Wide Web; the Superintendent of Documents home page address is http://www.access.gpo.gov/su__docs/, by using local WAIS client software, or by telnet to swais.access.gpo.gov, then login as guest, (no password required). Dial-in users should use communications software and modem to call (202) 512–1661; type swais, then login as guest (no password required). For general information about *GPO Access*, contact the *GPO Access* User Support Team by sending Internet e-mail to gpoaccess@gpo.gov; by faxing to (202) 512–1262; or by calling (202) 512–1530 between 7 a.m. and 5 p.m. Eastern time, Monday–Friday, except for Federal holidays.

The annual subscription price for the Federal Register paper edition is $494, or $544 for a combined Federal Register, Federal Register Index and List of CFR Sections Affected (LSA) subscription; the microfiche edition of the Federal Register including the Federal Register Index and LSA is $433. Six month subscriptions are available for one-half the annual rate. The charge for individual copies in paper form is $8.00 for each issue, or $8.00 for each group of pages as actually bound; or $1.50 for each issue in microfiche form. All prices include regular domestic postage and handling. International customers please add 25% for foreign handling. Remit check or money order, made payable to the Superintendent of Documents, or charge to your GPO Deposit Account, VISA or MasterCard. Mail to: New Orders, Superintendent of Documents, P.O. Box 371954, Pittsburgh, PA 15250–7954.

There are no restrictions on the republication of material appearing in the Federal Register.

How To Cite This Publication: Use the volume number and the page number. Example: 61 FR 12345.

SUBSCRIPTIONS AND COPIES

PUBLIC	
Subscriptions:	
Paper or fiche	202–512–1800
Assistance with public subscriptions	512–1806
General online information	202–512–1530
Single copies/back copies:	
Paper or fiche	512–1800
Assistance with public single copies	512–1803
FEDERAL AGENCIES	
Subscriptions:	
Paper or fiche	523–5243
Assistance with Federal agency subscriptions	523–5243

For other telephone numbers, see the Reader Aids section at the end of this issue.

FEDERAL REGISTER WORKSHOP

THE FEDERAL REGISTER: WHAT IT IS AND HOW TO USE IT

FOR: Any person who uses the Federal Register and Code of Federal Regulations.

WHO: Sponsored by the Office of the Federal Register.

WHAT: Free public briefings (approximately 3 hours) to present:

1. The regulatory process, with a focus on the Federal Register system and the public's role in the development of regulations.
2. The relationship between the Federal Register and Code of Federal Regulations.
3. The important elements of typical Federal Register documents.
4. An introduction to the finding aids of the FR/CFR system.

WHY: To provide the public with access to information necessary to research Federal agency regulations which directly affect them. There will be no discussion of specific agency regulations.

WASHINGTON, DC

[Two Sessions]

WHEN: May 14, 1996 at 9:00 am
May 21, 1996 at 9:00 am

WHERE: Office of the Federal Register Conference Room, 800 North Capitol Street, NW., Washington, DC (3 blocks north of Union Station Metro)

RESERVATIONS: 202–523–4538

Printed on recycled paper containing 100% post consumer waste

Contents

Federal Register
Vol. 61, No. 81
Thursday, April 25, 1996

Agriculture Department
See Animal and Plant Health Inspection Service
See Federal Crop Insurance Corporation
See Forest Service
See Rural Housing Service
NOTICES
Agency information collection activities:
Submission for OMB review; comment request, 18371

Air Force Department
NOTICES
Base realignment and closure:
Disposal and reuse—
K.I. Sawyer AFB, MI, 18384–18385

Animal and Plant Health Inspection Service
RULES
Plant-related quarantine, domestic:
Karnal bunt disease—
California, 18233–18235
NOTICES
Meetings:
Foreign Animal and Poultry Diseases Advisory Committee, 18371

Antitrust Division
NOTICES
National cooperative research notifications:
Auto Body Consortium, Inc., 18409
Corporation for National Research Initiatives, 18409
Industrial Macromolecular Crystallography Association, 18410
International Pharmaceutical Aerosol Consortium for Toxicology Testing of HFA–134a (IPACT–I), 18410
International Pharmaceutical Aerosol Consortium for Toxicology Testing of HFA–227 (IPACT–II), 18409–18410
Southwest Research Institute, 18409

Census Bureau
NOTICES
Agency information collection activities:
Proposed collection; comment request, 18374–18375

Civil Rights Commission
NOTICES
Meetings; State advisory committees:
Missouri, 18373
North Dakota, 18373

Coast Guard
RULES
List of penalty provisions Coast Guard is authorized to enforce; appendix removed, 18250–18251
NOTICES
Reports; availability, etc.:
Tank vessel design, construction, and operation under 1990 Oil Pollution Act, 18457–18458

Commerce Department
See Census Bureau
See Foreign-Trade Zones Board
See International Trade Administration
See National Oceanic and Atmospheric Administration

Committee for the Implementation of Textile Agreements
NOTICES
Cotton, wool, and man-made textiles:
Burma (Myanmar), 18383
El Salvador, 18383–18384

Comptroller of the Currency
PROPOSED RULES
Government securities sales practices:
Banks' conduct of business as government securities brokers or dealers; standards, 18470–18477

Consumer Product Safety Commission
RULES
Hazardous substance:
Multiple tube mine and shell fireworks devices; stability performance test requirement
Correction, 18245
NOTICES
Meetings; Sunshine Act, 18384

Defense Department
See Air Force Department
PROPOSED RULES
Federal Acquisition Regulation (FAR):
Late offers consideration, 18480–18482

Education Department
NOTICES
Meetings:
National Library of Education Advisory Task Force, 18385

Employment and Training Administration
NOTICES
Adjustment assistance:
ABT CO et al., 18420–18421
Galey & Lord, 18419
Hill Co., Inc., 18413–18414
Pope & Talbot, Inc., 18420
NAFTA transitional adjustment assistance:
Equitable Resources Energy Co. et al., 18414–18419

Energy Department
See Federal Energy Regulatory Commission

Environmental Protection Agency
RULES
Air pollutants, hazardous; national emission standards:
Tennessee; radionuclides emissions other than radon from Energy Department facilities, etc., 18280–18281
Air pollution; standards of performance for new stationary sources:
Metals emissions determination, 18260–18280
Air quality implementation plans; approval and promulgation; various States:
Florida, 18259–18260
Kansas and Missouri, 18251–18255
Ohio, 18255–18257

Wisconsin, 18257–18259
Hazardous waste program authorizations:
Alabama, 18281–18284
North Carolina, 18284–18286
Superfund program:
National oil and hazardous substances contingency plan—
National priorities list update, 18287
PROPOSED RULES
Air quality implementation plans; approval and promulgation; various States:
Florida, 18311
Kansas and Missouri, 18310
Wisconsin, 18311

Equal Employment Opportunity Commission
NOTICES
Meetings; Sunshine Act, 18394

Executive Office of the President
See Presidential Documents
See Trade Representative, Office of United States

Farm Credit Administration
RULES
Farm credit system:
Accounting and reporting requirements; high risk assets, 18235–18236

Federal Aviation Administration
RULES
Airworthiness directives:
Boeing, 18238–18242
SAAB, 18242–18245
Societe Nationale Industrielle Aerospatiale and Eurocopter France, 18236–18238
PROPOSED RULES
Airworthiness directives:
McDonnell Douglas, 18303–18305
New Piper Aircraft, Inc., 18299–18303
NOTICES
Environmental statements; availability, etc.:
Syracuse-Hancock International Airport, NY, 18458
Meetings:
RTCA, Inc., 18461

Federal Bureau of Investigation
NOTICES
Meetings:
Criminal Justice Information Services Advisory Policy Board, 18410–18411

Federal Communications Commission
RULES
Radio broadcasting:
Broadcast license renewal procedures, 18289–18291
Television broadcasting:
Cable television systems—
Major television markets; list, 18291–18292
PROPOSED RULES
Personal communications services:
Mobile-satellite services; allocation of 70 MHz range satellites operation use; comment period reopening, 18354–18355
Telecommunications Act of 1996; implementation:
Local competition provisions, 18311–18354
NOTICES
Applications, hearings, determinations, etc.:
KGCX, Inc., et al., 18394

Federal Crop Insurance Corporation
PROPOSED RULES
Crop insurance regulations:
Pear crop provisions, 18293–18299

Federal Deposit Insurance Corporation
PROPOSED RULES
Government securities sales practices:
Banks' conduct of business as government securities brokers or dealers; standards, 18470–18477

Federal Emergency Management Agency
RULES
Flood insurance; communities eligible for sale:
Michigan et al., 18287–18289
NOTICES
Disaster and emergency areas:
Indiana, 18394–18395
New York, 18395
Texas, 18395
Meetings:
Technical Mapping Advisory Council, 18395

Federal Energy Regulatory Commission
NOTICES
Electric rate and corporate regulation filings:
Great Bay Power Corp. et al., 18388–18391
Hydroelectric applications, 18385–18386, 18391–18394
Applications, hearings, determinations, etc.:
CNG Transmission Corp., 18387
Colorado Interstate Gas Co., 18387
Northwest Pipeline Corp., 18388
Pacific Gas Transmission Co., 18386–18387
Williams Natural Gas Co., 18388
Wisconsin Electric Power Co., 18386

Federal Highway Administration
RULES
Right-of-way and environment:
Right-of-way program administration; obsolete and redundant regulations removed, 18246–18247
PROPOSED RULES
Motor carrier safety standards:
Training of entry-level drivers of commercial motor vehicles, 18355–18366

Federal Maritime Commission
NOTICES
Agreements filed, etc., 18395–18396

Federal Reserve System
PROPOSED RULES
Membership of State banking institutions and international banking operations (Regulations H and K):
Banks conduct of business as government securities brokers or dealers; standards, 18470–18477
NOTICES
Banks and bank holding companies:
Formations, acquisitions, and mergers, 18396–18397
Permissible nonbanking activities, 18397

Fish and Wildlife Service
NOTICES
Endangered and threatened species permit applications, 18407
Environmental statements; availability, etc.:
Incidental take permits—
Iron County, UT; Utah prairie dog, 18407–18408

Foreign-Trade Zones Board
NOTICES
Applications, hearings, determinations, etc.:
Alabama
ZF Industries, Inc.; automotive axle assembly manufacturing plant, 18375
Illinois
Shell Oil Co.; oil refinery complex, 18379–18380
Virginia, 18380

Forest Service
NOTICES
Environmental statements; notice of intent:
Tonto National Forest, AZ, 18372–18373

General Services Administration
PROPOSED RULES
Federal Acquisition Regulation (FAR):
Late offers consideration, 18480–18482

Geological Survey
NOTICES
Meetings:
Federal Geographic Data Committee—
Facilities working group, 18408

Health and Human Services Department
See National Institutes of Health

Housing and Urban Development Department
RULES
Fair housing:
Fair Housing Act implementation; Federal regulatory reform
Correction, 18248–18249
Manufactured home procedural and enforcement regulations:
Federal regulatory review
Correction, 18249–18250
NOTICES
Grant and cooperative agreement awards:
Public and Indian housing—
Youth sports program; correction, 18402–18405
Privacy Act:
Systems of records, 18401–18402

Interior Department
See Fish and Wildlife Service
See Geological Survey
See Land Management Bureau
See Minerals Management Service

Internal Revenue Service
NOTICES
Agency information collection activities:
Proposed collection; comment request, 18464
Meetings:
Information Reporting Program Advisory Committee, 18464–18465

International Trade Administration
NOTICES
Antidumping:
Circular welded carbon steel pipes and tubes from—
Thailand, 18375–18377
Circular welded non-alloy steel pipe from—
Korea, 18380–18381
Fresh tomatoes from—
Mexico, 18377–18378
Silicon metal from—
Brazil, 18375
Antidumping and countervailing duties:
Administrative review requests, 18378–18379
Scope rulings; list, 18381–18383

Justice Department
See Antitrust Division
See Federal Bureau of Investigation
See National Institute of Justice
NOTICES
Pollution control; consent judgments:
Cambridge Plating Co., Inc., 18411
Flour City Architectural Metals, Inc., et al., 18412
Island Realty, Inc., 18413
Keystone Sanitation Co., Inc., et al., 18411–18412
Leggett & Platt, Inc., 18412
Oaas, Torger L., et al., 18412–18413

Labor Department
See Employment and Training Administration
See Mine Safety and Health Administration
See Pension and Welfare Benefits Administration

Land Management Bureau
NOTICES
Classification of public lands:
Utah, 18406–18407
Closure of public lands:
Oregon, 18405, 18408–18409
Coal leases, exploration licenses, etc.:
Colorado, 18406
Meetings:
Northwest Colorado Resource Advisory Council, 18406
Resource advisory councils—
Upper Snake River Districts, 18405–18406
Resource management plans, etc.:
Pocatello Resource Area, ID, 18405

Maritime Administration
NOTICES
Applications, hearings, determinations, etc.:
BSTC Holding Inc., 18461–18462

Minerals Management Service
PROPOSED RULES
Outer Continental Shelf; oil, gas, and sulphur operations:
Lessees; flexibility in keeping leases in force beyond primary term, 18309–18310

Mine Safety and Health Administration
PROPOSED RULES
Respirable coal mine dust; occupational exposure; NIOSH criteria document
Response, 18308–18309

National Aeronautics and Space Administration
PROPOSED RULES
Federal Acquisition Regulation (FAR):
Late offers consideration, 18480–18482

National Communications System
NOTICES
Federal telecommunications standards:
Telecommunications—
Project 25 land mobile radio standards, etc., 18446–18447

National Highway Traffic Safety Administration
RULES
Alcohol traffic safety programs, incentive grant criteria; CFR part removed, 18247–18248
NOTICES
Meetings:
Safety performance standards, research, and safety assurance programs, 18463

National Institute for Literacy
NOTICES
Agency information collection activities:
Proposed collection; comment request, 18445–18446

National Institute of Justice
NOTICES
Grants and cooperative agreements; availability, etc.:
High intensity drug trafficking areas; program assessment, 18411

National Institutes of Health
NOTICES
Meetings:
Human Genome Research National Advisory Council, 18397–18398
National Cancer Institute, 18400–18401
National Center for Research Resources, 18399–18400
National Heart, Lung, and Blood Institute, 18397, 18399
National Institute of Allergy and Infectious Diseases, 18401
National Institute of Environmental Health Sciences, 18398–18400
National Institute of Mental Health, 18399
National Institute of Neurological Disorders and Stroke, 18398

National Oceanic and Atmospheric Administration
PROPOSED RULES
Tuna, Atlantic bluefin fisheries, 18366–18370
NOTICES
Meetings:
Gulf of Mexico Fishery Management Council, 18383

National Science Foundation
NOTICES
Meetings:
Advanced Scientific Computing Special Emphasis Panel, 18447
Geosciences Special Emphasis Panel, 18447
Research, Evaluation and Communication Special Emphasis Panel, 18447

Nuclear Regulatory Commission
NOTICES
Applications, hearings, determinations, etc.:
Commonweath Edison Co., 18449–18450
Portland General Electric Co. et al., 18448–18449

Office of United States Trade Representative
See Trade Representative, Office of United States

Pension and Welfare Benefits Administration
NOTICES
Employee benefit plans; prohibited transaction exemptions:
Jacor Communications Inc. et al., 18421–18445

Presidential Documents
ADMINISTRATIVE ORDERS
National Parks:
Public-private partnerships (Memorandum of April 22, 1996), 18231–18232
Tansportation impact; planning (Memorandum of April 22, 1996), 18229–18230

Public Health Service
See National Institutes of Health

Rural Housing Service
NOTICES
Agency information collection activities:
Proposed collection; comment request, 18371–18372

Securities and Exchange Commission
PROPOSED RULES
Securities:
Odd-lot tender offers by issuers, 18306–18308
NOTICES
Meetings; Sunshine Act, 18455
Self-regulatory organizations; proposed rule changes:
National Association of Securities Dealers, Inc., 18452–18454
Philadelphia Stock Exchange, Inc., 18454–18455
Applications, hearings, determinations, etc.:
Public utility holding company filings, 18451–18452

Selective Service System
NOTICES
Agency information collection activities:
Submission for OMB review; comment request, 18455–18456

State Department
NOTICES
Meetings:
Shipping Coordinating Committee, 18456–18457

Surface Transportation Board
NOTICES
Motor carriers:
Fuel cost-related surcharge increases; petitions to allow short-term notices—
American Trucking Associations, Inc., et al., 18462–18463

Textile Agreements Implementation Committee
See Committee for the Implementation of Textile Agreements

Trade Representative, Office of United States
NOTICES
World Trade Organization:
European Communities' banana regime, 18450–18451

Transportation Department
See Coast Guard
See Federal Aviation Administration
See Federal Highway Administration
See Maritime Administration
See National Highway Traffic Safety Administration
See Surface Transportation Board
NOTICES
Comprehensive truck size and weight study; analytical framework and outreach plan, 18458–18461

Treasury Department
See Comptroller of the Currency
See Internal Revenue Service
RULES
Bank Secrecy Act:
Suspicious transactions; reporting requirement
Correction, 18250
Currency and foreign transactions; financial reporting and recordkeeping requirements:
Bank Secrecy Act; implementation—
Funds transfers and transmittals (wire transfers); recordkeeping by financial institutions; correction, 18250
NOTICES
Meetings:
Community Adjustment and Investment Program Advisory Committee, 18463–18464

United States Information Agency
NOTICES
Grants and cooperative agreements; availability, etc.:
Edmund S. Muskie fellowship program, 18465–18467

Separate Parts In This Issue

Part II
Treasury Department, Comptroller of the Currency; Federal Reserve System; Federal Deposit Insurance Corporation, 18470–18477

Part III
Department of Defense; General Services Administration; National Aeronautics and Space Administration, 18480–18482

Reader Aids
Additional information, including a list of public laws, telephone numbers, reminders, and finding aids, appears in the Reader Aids section at the end of this issue.

Electronic Bulletin Board
Free Electronic Bulletin Board service for Public Law numbers, Federal Register finding aids, and a list of documents on public inspection is available on 202–275–1538 or 275–0920.

CFR PARTS AFFECTED IN THIS ISSUE

A cumulative list of the parts affected this month can be found in the Reader Aids section at the end of this issue.

3 CFR

Administrative Orders:

Memorandums:

April 22, 1996 18229
April 22, 1996 18231

7 CFR

301.....18233

Proposed Rules:

457.....18293

12 CFR

621.....18235

Proposed Rules:

13.....18470
208.....18470
211.....18470
368.....18470

14 CFR

39 (3 documents) 18236, 18238, 18242

Proposed Rules:

39 (2 documents) 18299, 18303

16 CFR

1500.....18245
1507.....15245

17 CFR

Proposed Rules:

240.....18306

23 CFR

710.....18246
712.....18246
720.....18246
740.....18246
1309.....18247

24 CFR

100.....18248
103.....18248
109.....18248
3280.....18249

30 CFR

Proposed Rules:

70.....18308
71.....18308
250.....18309

31 CFR

103 (2 documents) 18250

33 CFR

1.....18250

40 CFR

52 (4 documents) 18251, 18255, 18257, 18259
60.....18260
61.....18260
63.....18280
271 (2 documents) 18281, 18284
300.....18287

Proposed Rules:

52 (3 documents) 18310, 18311

44 CFR

64.....18287

47 CFR

1.....18289
73.....18289
76.....18291

Proposed Rules:

Ch. I.....18811
2.....18354

48 CFR

Proposed Rules:

14.....18480
15.....18480
52.....18480

49 CFR

Proposed Rules:

383.....18355

50 CFR

Proposed Rules:

285.....18366

Federal Register
Vol. 61, No. 81
Thursday, April 25, 1996

Presidential Documents

Title 3—

The President

Memorandum of April 22, 1996

Additional Transportation Planning To Address Impacts of Transportation on National Parks

Memorandum for the Heads of Executive Departments and Agencies

Transportation in national parks—including ground transportation of visitors into the parks and airplane flights over the parks—has a significant impact on a visitor's experience of the park and on park management. The Secretary of Transportation has both valuable expertise and regulatory authority to address certain of these issues, and has been working on them with the Secretary of the Interior and others.

Aircraft flying at low altitudes over national parks can, if not properly managed, mar the natural beauty of the parks and create significant noise problems as well. The intrusion of such aircraft can interfere with wildlife (including threatened and endangered species), cultural resources and ceremonies, and visitors' enjoyment of parks, including the ability to experience natural sounds without interruption from mechanical noise. Several parks face overflight problems, including Grand Canyon National Park where substantial restoration of natural quiet is mandated by law, and several others identified by the National Park Service (NPS). It is important to the future of parks to address these problems quickly and in a fair and reasonable manner.

In addition, the National Park System contains thousands of miles of roads. All too often in peak visitor periods roads are so crowded with cars that the congestion and competition for space diminish the quality of the public's experience. Parks are not too full of people, but the roads and parking areas often are jammed. With modern technology and alternative transportation systems, the parks can continue to be accessible to all, and can be more enjoyable places to experience and learn about nature and history.

Therefore, to the extent permitted by law, I hereby direct the Secretary of Transportation in consultation with the heads of relevant departments and agencies to continue the ongoing development of rules as set out below to address overflights of the National Parks:

1. For Grand Canyon National Park,

(a) issue proposed regulations within 90 days to place appropriate limits on sightseeing aircraft over the Grand Canyon National Park to reduce the noise immediately and make further substantial progress toward restoration of natural quiet, as defined by the Secretary of the Interior, while maintaining aviation safety in accordance with the Overflights Act (Public Law 100–91). Action on this rulemaking to accomplish these purposes should be completed by the end of 1996; and

(b) should any final rulemaking determine that issuance of a further management plan is necessary to substantially restore natural quiet in the Grand Canyon National Park, complete within 5 years a plan that addresses how the Federal Aviation Administration and NPS will complete the ''substantial restoration and maintenance of natural quiet,'' as defined by the Secretary of the Interior in accordance with the Overflights Act. Any such plan shall ensure that the restoration of natural quiet required by the Overflights Act shall be completed in the park not more than 12 years from the date of issuance of this directive as recommended in NPS's 1994 ''Report on Effects of Aircraft Overflights on the National Park System.''

2. For Rocky Mountain National Park, complete and issue, if appropriate, within 90 days, a notice of proposed rulemaking to address the potential adverse impact on the park and its visitors of overflights by sightseeing aircraft, keeping in mind the value of natural quiet and the natural experience in the park, as well as protection of public health and safety.

3. Issue by the end of 1996 a notice of proposed rulemaking for the management of sightseeing aircraft in those National Parks where it is deemed necessary to reduce or prevent the adverse effects of such aircraft. The regulation should, at a minimum, establish a framework for managing air traffic over those park units identified in the 1994 NPS study, as priorities for (1) resolution of airspace issues and (2) maintaining or restoring natural quiet.

4. Develop appropriate educational and other materials for the public at large and all aviation interests that describe the importance of natural quiet to park visitors and the need for cooperation from the aviation community. This guidance shall also recognize that, in some parks, air tours provide important access to approved areas in those parks, especially with regard to the disabled communities.

In addition, with respect to ground transportation in the parks, the Secretary of the Interior, in consultation with the Secretary of Transportation, is directed as follows:

To develop a plan for a comprehensive effort to improve public transportation in the national parks. This plan should include:

1. design of pilot programs for improved public transportation in the Grand Canyon, Zion, and Yosemite National Parks;

2. plans to work with relevant State, local, and tribal governments on this effort;

3. options to increase access to the parks by rebuilding infrastructure in the parks; and

4. recommendations to enhance resource protection and the quality of visitor experience through innovative transportation planning including, where possible and appropriate, the use of alternative fuel vehicles.

This memorandum shall be published in the Federal Register.

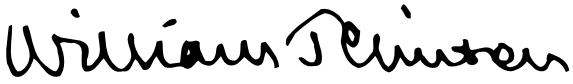

THE WHITE HOUSE,
Washington, April 22, 1996.

[FR Doc. 96–10369
Filed 4–24–96; 8:45 am]
Billing code 3195–01–P

Presidential Documents

Memorandum of April 22, 1996

Facilitating Public-Private Partnerships for Protection of the National Parks

Memorandum for the Heads of Executive Departments and Agencies

Many important efforts are already underway in which the private sector works in partnership with government to protect or maintain public lands. These include the work of the National Park Foundation, an organization created by the Congress in 1967 to receive private gifts and make disbursements to benefit the parks; cooperative agreements between the private sector and State and local parks to share resources and equipment and to provide valuable services, including maintenance services, to the parks; and agreements with willing private parties to acquire conservation easements. In an effort to ensure that the public-private partnerships that can enhance park protection and maintenance are as effective as possible, I hereby direct the following action:

1. The Secretary of the Interior is to provide to me, within 30 days, a specific proposal for ways in which the National Park Foundation's role in fostering public-private partnerships on behalf of the parks can be invigorated through either administrative or legislative action.

2. The Secretary of the Interior is to provide to me a legislative proposal that would make permanently available to the National Park System the authority to enter into cooperative agreements on behalf of the parks. This proposal should be consistent with the temporary authority that would be provided by enactment of my 1997 budget proposal as submitted to the Congress.

3. The Secretary of the Interior is to provide a report to me within 6 months on options for preserving historic structures within National Parks. This report should consider the possibilities for partnerships with businesses, associations, and individuals in the private sector.

4. The Secretary of the Interior shall work with the Congress to pass legislation that would allow the implementation of the 1995 National Park Service study to protect vistas surrounding Point Reyes National Seashore, California, while retaining existing private uses through actions including the purchase of conservation easements from willing private sellers. The Secretary of the Interior shall also give priority to funding such purchases from existing funds should authorization for such purchases be enacted. In addition, to the extent permitted by law and within existing budget authority, the Secretary shall exercise his existing authority to make a minor boundary adjustment as necessary to carry out the purposes of the National Park Service study to add property to Point Reyes National Seashore prior to enactment of such legislation, and to make available an amount of funds not to exceed $1 million to purchase such property from willing sellers.

This memorandum shall be published in the Federal Register.

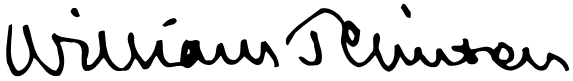

THE WHITE HOUSE,
Washington, April 22, 1996.

[FR Doc. 96–10370
Filed 4–24–96; 8:45 am]
Billing code 3195–01–P

Rules and Regulations

Federal Register
Vol. 61, No. 81
Thursday, April 25, 1996

This section of the FEDERAL REGISTER contains regulatory documents having general applicability and legal effect, most of which are keyed to and codified in the Code of Federal Regulations, which is published under 50 titles pursuant to 44 U.S.C. 1510.

The Code of Federal Regulations is sold by the Superintendent of Documents. Prices of new books are listed in the first FEDERAL REGISTER issue of each week.

DEPARTMENT OF AGRICULTURE

Animal and Plant Health Inspection Service

7 CFR Part 301

[Docket No. 96–016–5]

Karnal Bunt

AGENCY: Animal and Plant Health Inspection Service, USDA.

ACTION: Interim rule and request for comments.

SUMMARY: We are amending the Karnal bunt regulations by adding Imperial County, CA, and a portion of Riverside County, CA, to the list of areas quarantined because of infestations of Karnal bunt. We are also adding *Tilletia* indica (Mitra) Mundkur, the organism that causes Karnal bunt, to the list of restricted articles. This action is necessary on an emergency basis to prevent the artificial spread of Karnal bunt, a serious fungal disease of wheat, durum wheat, and triticale, into noninfected areas of the United States.

DATES: Interim rule effective April 19, 1996. Consideration will be given only to comments received on or before June 24, 1996.

ADDRESSES: Please send an original and three copies of your comments to Docket No. 96–016–5, Regulatory Analysis and Development, PPD, APHIS, suite 3C03, 4700 River Road Unit 118, Riverdale MD 20737–1238. Please state that your comments refer to Docket No. 96–016–5. Comments received may be inspected at USDA, room 1141, South Building, 14th Street and Independence Avenue SW., Washington, DC, between 8 a.m. and 4:30 p.m., Monday through Friday, except holidays. Persons wishing to inspect comments are requested to call ahead on (202) 690–2817 to facilitate entry into the comment reading room.

FOR FURTHER INFORMATION CONTACT: Mr. Stephen Poe, Operations Officer, Domestic and Emergency Operations, PPQ, APHIS, 4700 River Road, Unit 134, Riverdale, MD 20732, (301) 734–8247.

SUPPLEMENTARY INFORMATION:

Background

Karnal bunt is a serious fungal disease of wheat (*Triticum aestivum*), durum wheat (*Triticum durum*), and triticale (*Triticum aestivum* X *Seale cereals*), a hybrid of wheat and rye. The disease is caused by the smut fungus *Tilletia indica* (Mitra) Mundkur and is spread by spores. Karnal bunt is a serious disease that affects both yield and grain quality. It adversely affects the color, odor, and palatability of flour and other foodstuffs made from affected grain. Grain containing any amount of bunted kernels is reduced in quality. Karnal bunt does not present a risk to human health.

On March 20, 1996, the Secretary of Agriculture signed a ''Declaration of Extraordinary Emergency'' authorizing the Secretary to take emergency action under 7 U.S.C. 150dd with regard to Karnal bunt within the States of Arizona, New Mexico, and Texas. The ''Declaration of Extraordinary Emergency'' was published in the Federal Register on March 25, 1996 (61 FR 12058, Docket No. 96–016–1). On March 26, 1996, the Secretary of Agriculture signed a ''Declaration of Emergency'' authorizing the transfer and use of funds within the Department for a program to control Karnal bunt wherever it may be found in the United States. The ''Declaration of Emergency'' was published in the Federal Register on March 29, 1996 (61 FR 14046, Docket No. 96–016–2).

In an interim rule effective March 25, 1996, and published in the Federal Register March 28, 1996 (61 FR 13649–13655, Docket No. 93–016–3), we established the Karnal bunt regulations (7 CFR 301.89–1 through 301.89–11) and quarantined the State of Arizona and a total of six counties in the States of New Mexico and Texas. The regulations impose restrictions on the interstate movement of regulated articles from quarantined areas in order to prevent the artificial spread of Karnal bunt to noninfested areas of the United States.

Additions to Quarantined Areas

Recently, Karnal bunt was detected in lots of seed that were either planted or stored in California. On April 12, 1996, the Secretary of Agriculture signed a ''Declaration of Extraordinary Emergency'' authorizing the Secretary to take emergency action under 7 U.S.C. 150dd with regard to Karnal bunt within California.

The regulations in § 301.89–3 provide that the Administrator of APHIS will quarantine each State, or portion of a State, that is infected with Karnal bunt or that the Administrator considers necessary to regulate due to its proximity to an infestation or its inseparability from an infected locality for quarantine purposes.

In accordance with these criteria and the recent detection of Karnal bunt in California, we are amending § 301.89–3(e) by adding all of Imperial County and a portion of Riverside County, CA, to the list of quarantined areas.

The quarantined area in Riverside County, CA, is that portion of the county in the Blythe and Ripley areas bounded by a line drawn as follows: Beginning at the intersection of State Highway 62 and the Riverside-San Bernardino County line, then east along the Riverside-San Bernardino County line to its intersection with the California-Arizona State line; then south along the California-Arizona State line to its intersection with the Riverside-Imperial County line; then west along the Riverside-Imperial County line to its intersection with Graham Pass Road; then northeast along Graham Pass Road to its intersection with Chuckwalla Valley Road; then west and northwest along Chuckwalla Valley Road to its intersection with Interstate Highway 10; then west along Interstate Highway 10 to its intersection with State Highway 177; then northeast and north along State Highway 177 to its intersection with State Highway 62; then northeast along State Highway 62 to the point of beginning.

Addition of Regulated Article

Section 301.89–2 of the regulations lists articles whose movement from quarantined areas is restricted due to the risk of spreading Karnal bunt. In this interim rule, we are adding to the list of regulated articles ''*Tilletia indica* (Mitra) Mundkur,'' the organism that causes Karnal bunt.

Emergency Action

The Administrator of the Animal and Plant Health Inspection Service has determined that an emergency exists that warrants publication of this interim rule without prior opportunity for public comment. Immediate action is necessary to prevent the artificial spread of Karnal bunt to noninfected areas of the United States.

Because prior notice and other public procedures with respect to this action are impracticable and contrary to the public interest under these conditions, we find good cause under 5 U.S.C. 553 to make it effective upon signature. We will consider comments that are received within 60 days of publication of this rule in the Federal Register. After the comment period closes, we will publish another document in the Federal Register. It will include a discussion of any comments we receive and any amendments we are making to the rule as a result of the comments.

Executive Order 12866 and Regulatory Flexibility Act

This rule has been reviewed under Executive Order 12866. For this action, the Office of Management and Budget has waived its review process required by Executive Order 12866.

This action quarantines one entire county and a portion of another county in California because of Karnal bunt and restricts the interstate movement of regulated articles from those quarantined areas. This action also adds *Tilletia indica* (Mitra) Mundkur to the list of regulated articles. This emergency situation makes compliance with section 603 and timely compliance with section 604 of the Regulatory Flexibility Act (5 U.S.C. 603 and 604) impracticable. This rule may have a significant economic impact on a substantial number of small entities. If we determine this is so, then we will discuss the issues raised by section 604 of the Regulatory Flexibility Act in our Final Regulatory Flexibility Act Analysis.

Executive Order 12372

This program/activity is listed in the Catalog of Federal Domestic Assistance under No. 10.025 and is subject to Executive Order 12372, which required intergovernmental consultation with State and local officials. (See 7 CFR part 3015, subpart V.)

Executive Order 12778

This rule has been reviewed under Executive Order 12778, Civil Justice Reform. This rule: (1) Preempts all State and local laws and regulations that are inconsistent with this rule; (2) has no retroactive effect; and (3) only requires administrative proceedings before parties may file suit in court challenging this rule upon the cancellation of a certificate, limited permit, or compliance agreement.

National Environmental Policy Act

An environmental assessment and finding of no significant impact have been prepared for this rule. The assessment provides a basis for the conclusion that the treatment of regulated articles, under the conditions specified in this rule, will not have a significant impact on the quality of the human environment. Based on the finding of no significant impact, the Administrator of the Animal and Plant Health Inspection Service has determined that an environmental impact statement need not be prepared.

The environmental assessment and finding of no significant impact were prepared in accordance with: (1) The National Environmental Policy Act of 1969 (NEPA) (42 U.S.C 4321 *et seq.*), (2) Regulations on the Council on Environmental Quality for implementing the procedural provisions of NEPA (40 CFR parts 1500–1508), (3) USDA regulations implementing NEPA (7 CFR part 1b), and (4) APHIS' NEPA Implementing Procedures (7 CFR part 372).

Copies of the environmental assessment and finding of no significant impact are available for public inspection at USDA, room 1141, South Building, 14th Street and Independence Avenue SW., Washington, DC, between 8 a.m. and 4:30 p.m., Monday through Friday, except holidays. Persons wishing to inspect copies are requested to call ahead on (202) 690–2817 to facilitate entry into the reading room. In addition, copies may be obtained by writing to the individual listed under **FOR FURTHER INFORMATION CONTACT.**

Paperwork Reduction Act

In accordance with section 3507(j) of the Paperwork Reduction Act of 1995 (44 U.S.C. 3501 *et seq.*), the information collection and recordkeeping requirements included in this interim rule have been submitted for emergency approval to the Office of Management and Budget (OMB). OMB has assigned control number 0579–0121 to the information collection and recordkeeping requirements. Notwithstanding any other provision of the law, no person is required to respond to, nor shall any person be subject to a penalty for failure to comply with a collection of information, subject to the requirements of the Paperwork Reduction Act, unless that collection of information displays a currently valid OMB Control Number. Please send written comments to the Office of Information and Regulatory Affairs, OMB, Attention: Desk Officer for APHIS, Washington, DC 20503. Please state that your comments refer to Docket No. 96–016–5. Please send a copy of your comments to: (1) Docket No. 96–016–5, Regulatory Analysis and Development, PPD, APHIS, suite 3C03, 4700 River Road Unit 118, Riverdale, MD 20737–1238, and (2) Clearance Officer, OIRM, USDA, room 404–W, 14th Street and Independence Avenue SW., Washington, DC 20250.

The paperwork associated with the Karnal bunt program will include the completion of compliance agreements, certificates, and limited permits. There will also be requests for inspections. We are soliciting comments from the public (as well as affected agencies) concerning our proposed information collection and recordkeeping requirements. We need this outside input to help us accomplish the following:

(1) Evaluate whether the proposed collection of information is necessary for the proper performance of our agency's functions, including whether the information will have practical utility;

(2) Evaluate the accuracy of our estimate of the burden of the proposed collection of information, including the validity of the methodology and assumptions used;

(3) Enhance the quality, utility, and clarity of the information to be collected; and

(4) Minimize the burden of the information collection on those who are to respond (such as through the use of appropriate automated, electronic, mechanical, or other technological collection techniques or other forms of information technology, e.g., permitting electronic submission responses).

Estimate of burden: Public reporting burden for this collection of information is estimated to average 20 minutes per response.

Respondents: State plant regulatory officials, shippers, growers, and representatives of the plant industry.

Estimated number of respondents: 1,915.

Estimated number of responses per respondent: 3.824.

Estimated total annual burden on respondents: 2,410 hours.

Copies of this information collection can be obtained from: Clearance Officer, OIRM, USDA, room 404–W, 14th Street and Independence Avenue SW., Washington, DC 20250.

List of Subjects in 7 CFR Part 301

Agricultural commodities, Plant diseases and pests, Quarantine, Reporting and recordkeeping requirements, Transportation.

PART 301—DOMESTIC QUARANTINE NOTICES

Accordingly, 7 CFR part 301 is amended as follows:

1. The authority citation for part 301 continues to read as follows:

Authority: 7 U.S.C. 150bb, 150dd, 150ee, 150ff, 161, 162, and 164–167; 7 CFR 2.22, 2.80, and 371.2(c).

2. In § 301.89–2, paragraphs (e) through (n) are redesignated as paragraphs (f) through (o), respectively, and a new paragraph (e) is added, as follows:

§ 301.89–2 Regulated articles.

* * * * *

(e) *Tilletia indica* (Mitra) Mundkur;

* * * * *

3. In § 301.89–3, paragraph (e), the designation of quarantined areas is amended by adding, in alphabetical order, entries for Imperial County and Riverside County in California, as follows:

§ 301.89–3 Quarantined areas.

* * * * *

(e) * * *

* * * * *

California

Imperial County. The entire county.

Riverside County. That portion of Riverside County in the Blythe and Ripley areas bounded by a line drawn as follows: Beginning at the intersection of State Highway 62 and the Riverside-San Bernardino County line, then east along the Riverside-San Bernardino County line to its intersection with the California-Arizona State line; then south along the California-Arizona State line to its intersection with the Riverside-Imperial County line; then west along the Riverside-Imperial County line to its intersection with Graham Pass Road; then northeast along Graham Pass Road to its intersection with Chuckwalla Valley Road; then west and northwest along Chuckwalla Valley Road to its intersection with Interstate Highway 10; then west along Interstate Highway 10 to its intersection with State Highway 177; then northeast and north along State Highway 177 to its intersection with State Highway 62; then northeast along State Highway 62 to the point of beginning.

Done in Washington, DC, this 19th day of April, 1996.

Terry L. Medley,

Acting Administrator, Animal and Plant Health Inspection Service.

[FR Doc. 96–10260 Filed 4–24–96; 8:45 am]

BILLING CODE 3410–34–P

FARM CREDIT ADMINISTRATION

12 CFR Part 621

RIN 3052–AB54

Accounting and Reporting Requirements

AGENCY: Farm Credit Administration.

ACTION: Final rule.

SUMMARY: The Farm Credit Administration (FCA or Agency), by the Farm Credit Administration Board (Board), adopts as final without change an interim rule amending its regulations on high-risk assets. The interim rule was adopted on November 17, 1994 (59 FR 60886, Nov. 29, 1994). The interim rule reflected recent changes in generally accepted accounting principles (GAAP) that supported retention of existing regulatory guidance for Farm Credit System (System) institutions. Although the need for immediate regulatory action did not permit a public comment period before the interim rule took effect, the FCA requested post-promulgation public comment on the interim rule. This final rule addresses the comments received.

EFFECTIVE DATE: December 15, 1994.

FOR FURTHER INFORMATION CONTACT:

Linda C. Sherman, Policy Analyst, Regulation Development, Office of Examination, Farm Credit Administration, McLean, VA 22102–5090, (703) 883–4498, TDD (703) 883–4444,

or

William L. Larsen, Senior Attorney, Regulatory Operations Division, Office of General Counsel, Farm Credit Administration, McLean, VA 22102–5090, (703) 883–4020, TDD (703) 883–4444.

SUPPLEMENTARY INFORMATION:

I. Background

Substantial amendments to the FCA's regulations on Accounting and Reporting Requirements at 12 CFR part 621 became effective on December 31, 1993. *See* 58 FR 48780, September 20, 1993. These regulations include requirements and standards for institutions to use in accounting for high-risk assets and disclosing loan performance characteristics. The amendments promoted consistency with industry practices in accounting and reporting and ensured that FCA regulatory requirements and standards remained consistent with GAAP.

Subpart C of part 621 provides System institutions and FCA examiners with clear guidance on how to categorize, account for, report, and disclose the performance of high-risk assets. In particular, the regulations provide specific criteria for placing loans in nonaccrual status, for using cash basis versus cost recovery accounting practices, for upgrading loans from nonaccrual to accrual status, and for aggregating nonaccrual loans. The amended regulations promote consistent financial reporting among System institutions and Systemwide financial statements that are comparable to those of other federally regulated financial institutions.

Subpart C was subject to a ''sunset'' provision when originally adopted, because the FCA expected that aspects of subpart C guidance might conflict with the provisions of Statement of Financial Accounting Standards (SFAS) No. 114 when they were later implemented by System institutions.[1] However, in October 1994, the Financial Accounting Standards Board (FASB) amended SFAS No. 114 by adopting SFAS No. 118.[2] SFAS No. 118 removed those elements of SFAS No. 114 that would have conflicted with subpart C. As a result, the FCA decided to retain subpart C. To ensure the elimination of the sunset provision before it automatically rescinded subpart C at year-end 1994, the FCA issued an interim rule with a request for public comment (59 FR 60886, Nov. 29, 1994).

II. Analysis of Public Comments

The FCA received one comment letter on the interim rule. The letter was submitted by the Farm Credit Council (FCC) on behalf of its membership, together with the Farm Credit System's Accounting Standards Work Group under the direction of the Federal Farm Credit Banks Funding Corporation.

The FCC recognizes the FCA's efforts to promote accounting and financial reporting requirements consistent with the current practices of commercial banks. However, reiterating arguments from their July 14, 1993 comment letter on the proposed rule, the FCC continues to express concern about adopting specific accounting and financial reporting rules rather than general guidelines. The FCC believes the regulations should be broad enough to allow for evolutionary changes in GAAP and notes that other regulators do not

[1] Statement of Financial Accounting Standards No. 114, ''Accounting by Creditors for Impairment of a Loan,'' an amendment of SFAS Statement Nos. 5 and 15, dated May 1993, was subject to mandatory implementation by institutions for fiscal years beginning after December 15, 1994.

[2] Statement of Financial Accounting Standards No. 118, ''Accounting by Creditors for Impairment of a Loan—Income Recognition and Disclosures,'' an amendment of FASB Statement No. 114, dated October 1994.

include such specific rules in their regulations. They urge the FCA to rescind the interim rule. Rescission would restore the sunset provision and retroactively eliminate §§ 621.6, 621.7, 621.8, 621.9 and 621.10 (subpart C).

The FCC bases its concern on the length of time necessary to amend FCA regulations. The FCC warns that the presence of specific requirements in the regulations could cause the System's financial reporting process to conflict with GAAP because the FCA would not be able to change its regulations quickly enough to remain current with GAAP guidelines for the accounting and financial reporting of high-risk assets. The FCC also points out that if the Agency were to lack a quorum of its Board, as has occurred in the past, it would be impossible to amend the regulations to be consistent with changes as may be required by GAAP.

The FCA observes in response that the application of GAAP to specific areas of accounting and financial reporting is not always well defined. This has been especially true of high-risk asset accounting. GAAP has not consistently provided specific authoritative guidance in the area of problem loan accounting and reporting until recently. While other financial institution regulators have addressed this issue by instituting specific guidance in their call report instructions, the FCA is addressing them in the accounting regulations. There is little substantive difference between these two approaches. Both the Office of the Comptroller of the Currency's (OCC) Call Report instructions and the FCA's regulations are published in the Federal Register, and both give the public an opportunity to provide comments prior to implementation of the revised policy direction.

The FCA continues to believe that, in areas such as high-risk accounting, the promulgation of regulations covering subjects not fully addressed by GAAP can be an effective method of promoting consistent accounting and reporting by System institutions. Since its adoption, the final regulation has improved the internal consistency of System financial disclosures regarding high-risk assets and made System accounting and reporting for such assets more comparable to the practices of the rest of the financial services industry. If GAAP provides future guidance and direction that conflicts with FCA regulations, the FCA agrees that it is important to respond to the changes. The FCA believes that it can address any inconsistencies that may develop between its regulations and GAAP in a timely fashion.

In support of its contention that the detailed nature of FCA regulations might make it difficult for the FCA to keep up with evolving trends in regulatory accounting guidance, the FCC notes two apparent inconsistencies between FCA regulations and the approach taken by other federal bank and thrift regulators. While not commenting substantively on the provisions, the FCC suggests that more flexible accounting and financial reporting guidelines would facilitate keeping System financial reporting consistent with other financial institutions. As noted, the FCA agrees with the broad goal of accounting and reporting consistency between the System and other financial institutions. However, in certain circumstances, the unique needs of the System may require FCA guidance that may differ from the approach of other regulators without affecting broad comparability of System financial reporting. This is the case with respect to the two examples of accounting and reporting guidance noted by the FCC.

First, the FCC notes that § 621.9(a) requires all contractual principal and interest due on the loan to be paid and the loan to be current before returning a nonaccrual loan to accrual status. The FCC compares this to guidance by other financial institution regulators that would permit institutions to return past due loans to accrual status if they are ''reasonably assured of repayment within a reasonable time period.''[3]

The FCA believes that any nonaccrual loan must demonstrate performance in order to be reinstated to accrual status. An essential demonstration of performance is that the loan be brought current. Under the final regulation, this must occur *before* an institution can resume interest accrual on that asset. However, the regulation also states that ''[o]nce the ultimate collectibility of the recorded investment is no longer in doubt, payments received in cash on such loan may qualify for recognition as interest income,'' (i.e., cash basis accounting) if certain characteristics are met at the time the payment is received. Therefore, application of FCA's regulation results in an accounting treatment of income recognition on such assets similar to that allowed by the other financial institution regulators.

In a second example, the FCC states that the OCC allows for cash basis interest income recognition on nonaccrual loans with partial charge-offs before complete recovery of the charge-off. The FCC notes that this differs from the requirement in § 621.8 that interest income cannot be recognized on a nonaccrual loan with an unrecovered partial charge-off. The FCA believes that applying loan payments to recover partial charge-offs prior to recording interest income is a prudent and appropriate approach to eliminating doubt as to the loan's ultimate collectibility and is not inconsistent with GAAP. In addition, this requirement is mitigated by an exception in cases where the prior charge-off was taken as part of a formal restructuring of the loan. The FCA believes this approach is justified for this type of asset in light of the unique structure of the System and its concentration of credit in limited agricultural markets. Moreover, any differences in income recognition between the FCA and the OCC requirements are likely to be temporary if the loan continues to perform.

For the reasons stated in the interim rule release, supplemented by the above analysis and discussion, the FCA Board adopts the interim rule amending 12 CFR part 621, which was published at 59 FR 60886 on November 29, 1994, as final without change. The effective date of this rule remains December 15, 1994. The FCA will continue to follow closely any further developments under GAAP in the area of problem loan accounting and reporting and will adjust its requirements as necessary.

Dated: April 19, 1996.

Floyd F. Fithian,

Secretary, Farm Credit Administration Board.

[FR Doc. 96–10238 Filed 4–24–96; 8:45 am]

BILLING CODE 6705–01–P

[3] Joint Statement of the OCC, Federal Deposit Insurance Corporation, Federal Reserve Board, and Office of Thrift Supervision titled ''Revised Interagency Guidance on Returning Nonaccrual Loans to Accrual Status'' issued June 10, 1993.

DEPARTMENT OF TRANSPORTATION

Federal Aviation Administration

14 CFR Part 39

[Docket No. 95–SW–01–AD; Amendment 39–9577; AD 96–09–03]

Airworthiness Directives; Societe Nationale Industrielle Aerospatiale and Eurocopter France Model SA–365N, N1, and N2 Helicopters

AGENCY: Federal Aviation Administration, DOT.

ACTION: Final rule.

SUMMARY: This amendment adopts a new airworthiness directive (AD), applicable to Societe Nationale Industrielle Aerospatiale and Eurocopter France Model SA–365N, N1,

and N2 helicopters, that requires an inspection of the door jettison systems to determine if the handle shafts are locked to the jettison systems. If the inspection indicates the handle shafts are locked to the jettison systems, this AD requires installation of a snapwire on the jettison systems and a visual inspection of the door jettison handles to determine whether two spring pins are installed, and installation of a second spring pin, if necessary. If the initial inspection indicates that the handle shafts are not locked to the jettison systems, this AD requires replacement of the sheared spring pin with two spring pins. This amendment is prompted by a factory inspection performed by the manufacturer that revealed that the forward passenger door jettison handles may have been fitted with one spring pin instead of two spring pins at the door jettison handle attachment points. The actions specified by this AD are intended to prevent a loss of the doors in flight and subsequent damage to the horizontal stabilizer, main fin, or lateral fins.

EFFECTIVE DATE: May 30, 1996.

ADDRESSES: The service information referenced in this AD may be obtained from American Eurocopter Corporation, 2701 Forum Drive, Grand Prairie, Texas 75053–4005. This information may be examined at the FAA, Office of the Assistant Chief Counsel, 2601 Meacham Blvd., Room 663, Fort Worth, Texas.

FOR FURTHER INFORMATION CONTACT: Mr. Richard Monschke, Aerospace Engineer, Rotorcraft Standards Staff, FAA, Rotorcraft Directorate, 2601 Meacham Blvd., Fort Worth, Texas 76137, telephone (817) 222–5116, fax (817) 222–5961.

SUPPLEMENTARY INFORMATION: A proposal to amend part 39 of the Federal Aviation Regulations (14 CFR part 39) to include an airworthiness directive (AD) that is applicable to Societe Nationale Industrielle Aerospatiale and Eurocopter France Model SA–365N, N1, and N2 helicopters was published in the Federal Register on November 2, 1995 (60 FR 55681). That action proposed to require, within 30 days after the effective date of the AD, an inspection of the door jettison systems to determine if the handle shafts were locked to the jettison systems. If the inspection indicated the handle shafts were locked to the jettison systems, that action proposed to require installation of a snapwire on the jettison systems and within 500 hours time-in-service, a visual inspection of the door jettison handles to determine whether two spring pins were installed, and installation of a second spring pin, if necessary. If the initial inspection indicated that the handle shafts were not locked to the jettison systems, the action proposed to require, before further flight, replacement of the sheared spring pin with two spring pins.

Interested persons have been afforded an opportunity to participate in the making of this amendment. No comments were received on the proposal or the FAA's determination of the cost to the public. The FAA has determined that air safety and the public interest require the adoption of the rule as proposed, except for various non-substantive editorial changes and deleting the incorporation by reference of the service bulletin. The FAA has determined that these changes will neither increase the economic burden on any operator nor increase the scope of the AD.

The FAA estimates that 27 helicopters of U.S. registry will be affected by this AD, that it will take approximately 8 work hours per helicopter to accomplish the actions, and that the average labor rate is $60 per work hour. Required parts will cost approximately $230 per helicopter. Based on these figures, the total cost impact of the AD on U.S. operators is estimated to be $19,170.

The regulations adopted herein will not have substantial direct effects on the States, on the relationship between the national government and the States, or on the distribution of power and responsibilities among the various levels of government. Therefore, in accordance with Executive Order 12612, it is determined that this final rule does not have sufficient federalism implications to warrant the preparation of a Federalism Assessment.

For the reasons discussed above, I certify that this action (1) is not a ''significant regulatory action'' under Executive Order 12866; (2) is not a ''significant rule'' under DOT Regulatory Policies and Procedures (44 FR 11034, February 26, 1979); and (3) will not have a significant economic impact, positive or negative, on a substantial number of small entities under the criteria of the Regulatory Flexibility Act. A final evaluation has been prepared for this action and it is contained in the Rules Docket. A copy of it may be obtained from the Rules Docket at the location provided under the caption **ADDRESSES.**

List of Subjects in 14 CFR Part 39

Air transportation, Aircraft, Aviation safety, Safety.

Adoption of the Amendment

Accordingly, pursuant to the authority delegated to me by the Administrator, the Federal Aviation Administration amends part 39 of the Federal Aviation Regulations (14 CFR part 39) as follows:

PART 39—AIRWORTHINESS DIRECTIVES

1. The authority citation for part 39 continues to read as follows:

Authority: 49 U.S.C. 106(g), 40113, 44701.

§ 39.13 [Amended]

2. Section 39.13 is amended by adding a new airworthiness directive to read as follows:

AD 96–09–03 Societe Nationale Industrielle Aerospatiale and Eurocopter France (Eurocopter France): Amendment 39–9577. Docket No. 95–SW–01–AD.

Applicability: Model SA–365N, N1, and N2 helicopters, serial numbers (S/N) 6008, 6033, 6083, 6084, 6085, 6093, 6120 and higher that have not been modified in accordance with Avis De Modification (AMS) 365A07–56B15, certificated in any category.

Note 1: This AD applies to each helicopter identified in the preceding applicability provision, regardless of whether it has been modified, altered, or repaired in the area subject to the requirements of this AD. For helicopters that have been modified, altered, or repaired so that the performance of the requirements of this AD is affected, the owner/operator must use the authority provided in paragraph (b) to request approval from the FAA. This approval may address either no action, if the current configuration eliminates the unsafe condition, or different actions necessary to address the unsafe condition described in this AD. Such a request should include an assessment of the effect of the changed configuration on the unsafe condition addressed by this AD. In no case does the presence of any modification, alteration, or repair remove any helicopter from the applicability of this AD.

Compliance: Required as indicated, unless accomplished previously.

To prevent a loss of the doors in flight and subsequent damage to the horizontal stabilizer, main fin, or lateral fins, accomplish the following:

(a) Within 30 days after the effective date of this AD, for both the left and right forward passenger door jettison systems, cut the snapwire on the door jettison handle, and, without turning the handle completely, determine whether the handle is locked to the jettison mechanism.

(1) If the door jettison handle shaft is locked to the jettison system,

(i) Install the snapwire, part number (P/N) L23321, or annealed copper safety wire, black enameled, 0.3mm diameter, on each door jettison handle.

(ii) Within 500 hours time-in-service (TIS) after the effective date of this AD, accomplish the following in accordance with the applicable maintenance manual:

(A) Remove the doors and remove the trimming panels from the passenger door posts. Visually inspect each door to determine whether two spring pins are installed to fasten each jettison handle.

(B) If only one spring pin is installed, install a second spring pin.

(C) Reinstall the trimming panel.

(D) Reinstall the door.

(E) Install the snapwire as specified in paragraph (a)(1)(i) of this AD.

(2) If a door jettison handle shaft is not locked to the jettison system, before further flight, accomplish the following.

(i) Remove the door and the trimming panel.

(ii) Remove the sheared spring pin.

(iii) Replace the sheared spring pin with two spring pins.

(iv) Reinstall the door trimming panels.

(v) Reinstall the door.

(vi) Install the snapwire as described in paragraph (a)(1)(i) of this AD.

Note 2: Eurocopter Service Bulletin SA 365, No. 01.38, dated January 31, 1994, pertains to this AD.

(b) An alternative method of compliance or adjustment of the compliance time that provides an acceptable level of safety may be used when approved by the Manager, Rotorcraft Standards Staff, FAA, Rotorcraft Directorate. Operators shall submit their requests through an FAA Principal Maintenance Inspector, who may concur or comment and then send it to the Manager, Rotorcraft Standards Staff.

Note 3: Information concerning the existence of approved alternative methods of compliance with this AD, if any, may be obtained from the Rotorcraft Standards Staff.

(c) Special flight permits may be issued in accordance with sections 21.197 and 21.199 of the Federal Aviation Regulations (14 CFR 21.197 and 21.199) to operate the helicopter to a location where the requirements of this AD can be accomplished.

(d) This amendment becomes effective on May 30, 1996.

Issued in Fort Worth, Texas, on April 18, 1996.

Eric Bries,

Acting Manager, Rotorcraft Directorate, Aircraft Certification Service.

[FR Doc. 96–10075 Filed 4–24–96; 8:45 am]

BILLING CODE 4910–13–U

---

14 CFR Part 39

[Docket No. 96–NM–75–AD; Amendment 39–9581; AD 96–09–07]

Airworthiness Directives; Boeing Model 757 Series Airplanes Equipped With Moog Spoiler Actuators

AGENCY: Federal Aviation Administration, DOT.

ACTION: Final rule; request for comments.

SUMMARY: This amendment supersedes an existing airworthiness directive (AD) that is applicable to Boeing Model 757 series airplanes equipped with certain Abex spoiler actuator electro-hydraulic servo valves (EHSV) installed in certain spoiler actuators. The existing AD currently requires a one-time inspection of the spoiler actuator to determine if a suspect EHSV is incorrectly installed, and replacement of the EHSV, if necessary. That amendment was prompted by reports that a bias spring in the EHSV of certain spoiler actuators was found to be incorrectly installed. The actions specified by that AD are intended to prevent a significant control upset of the airplane as a result of problems associated with an incorrectly installed EHSV in the spoiler actuator assembly. This amendment adds additional suspect EHSV's that require inspection; it also corrects the actuator manufacturer's name and corrects the serial number of one EHSV.

DATES: Effective May 10, 1996.

Comments for inclusion in the Rules Docket must be received on or before June 24, 1996.

ADDRESSES: Submit comments in triplicate to the Federal Aviation Administration (FAA), Transport Airplane Directorate, ANM–103, Attention: Rules Docket No. 96–NM–75–AD, 1601 Lind Avenue, SW., Renton, Washington 98055–4056.

Information concerning this AD action may be examined at the FAA, Transport Airplane Directorate, 1601 Lind Avenue, SW., Renton, Washington.

FOR FURTHER INFORMATION CONTACT: Don Eiford, Aerospace Engineer, Systems and Equipment Branch, ANM–130S, FAA, Seattle Aircraft Certification Office, 1601 Lind Avenue, SW., Renton, Washington; telephone (206) 227–2788; fax (206) 227–1181.

SUPPLEMENTARY INFORMATION: On March 5, 1996, the FAA issued AD 96–06–01, amendment 39–9537 (61 FR 9607, March 11, 1996), which is applicable to Boeing Model 757 series airplanes equipped with certain electro hydraulic servo valves (EHSV) installed in certain spoiler actuators. That AD requires a one-time inspection of the EHSV on the spoiler actuator to determine if a suspect valve is incorrectly installed; if so, the EHSV must be replaced. That action was prompted by reports that a bias spring in the EHSV of certain spoiler actuators was found to be incorrectly installed.

If the jet pipe in the first stage of the EHSV is plugged, or if the differential pressure between the extend and retract ports pressurized by the jet pipe is inadequate, an incorrectly installed bias spring on the second stage spool would cause the spoiler to be driven into the ''deploy'' position. Such inadvertent spoiler deployment would result in the airplane experiencing a rolling moment. If the airplane is already banked or is at a low altitude, or if the crew does not respond rapidly enough to control the uncommanded roll, a significant control upset of the airplane could result. The actions required by AD 96–06–01 are intended to prevent the occurrence of such a control upset.

New Data Since Issuance of AD 96–06–01

Since the issuance of that AD, the manufacturer has provided the FAA with data indicating that additional suspect EHSV's may be installed on the affected airplanes. These suspect EHSV's have serial numbers of 595, 563, and 909. If any these EHSV's are installed on an airplane, there is the potential for the occurrence of the same unsafe condition that was addressed by AD 96–06–01.

Explanation of New AD

Since an unsafe condition has been identified that is likely to exist or develop on other airplanes of this same type design, this AD supersedes AD 96–06–01 to require a one-time inspection of the spoiler actuator to determine if a suspect EHSV is incorrectly installed, and replacement of the EHSV, if necessary. This AD requires the inspection for and removal of three additional suspect EHSV's.

Additionally, action is taken throughout this AD to specify the correct names of the manufacturers of the spoiler actuator and the EHSV. The subject spoiler actuators are manufactured by Moog; the subject EHSV's are manufactured by Abex.

Table 1 of this AD has been corrected to indicate that the order numbers are ''Abex'' order numbers, rather than ''Boeing'' order numbers.

Due to a typographical error, EHSV serial number ''559'' was incorrectly listed in Table 1 of AD 96–06–01 as serial number ''569.'' This AD corrects that error.

Cost Impact

According to the records of the EHSV manufacturer, all of the affected EHSV's were shipped to be installed on Model 757 series airplanes that currently are operated by non-U.S. operators under foreign registry. None of the Model 757 series airplanes affected by this action are on the U.S. Register; therefore, they are not directly affected by this AD action. However, the FAA considers that this rule is necessary to ensure that the unsafe condition is addressed in the event that:

1. any of the subject airplanes are imported and placed on the U.S. Register in the future; or

2. any one of the suspect EHSV's is installed on a U.S.-registered airplane in the the future.

Should an affected airplane be placed on the U.S. Register in the future, it would require approximately 1 work hour to accomplish the required actions, at an average labor charge of $60 per work hour. Based on these figures, the cost impact of this AD would be $60 per airplane.

Conclusion

Since this AD action does not affect any airplane that is currently on the U.S. register, it has no adverse economic impact and imposes no additional burden on any person. Therefore, notice and public procedures hereon are unnecessary and the amendment may be made effective in less than 30 days after publication in the Federal Register.

Comments Invited

Although this action is in the form of a final rule and was not preceded by notice and opportunity for public comment, comments are invited on this rule. Interested persons are invited to comment on this rule by submitting such written data, views, or arguments as they may desire. Communications shall identify the Rules Docket number and be submitted in triplicate to the address specified under the caption **ADDRESSES**. All communications received on or before the closing date for comments will be considered, and this rule may be amended in light of the comments received. Factual information that supports the commenter's ideas and suggestions is extremely helpful in evaluating the effectiveness of the AD action and determining whether additional rulemaking action would be needed.

Comments are specifically invited on the overall regulatory, economic, environmental, and energy aspects of the rule that might suggest a need to modify the rule. All comments submitted will be available, both before and after the closing date for comments, in the Rules Docket for examination by interested persons. A report that summarizes each FAA-public contact concerned with the substance of this AD will be filed in the Rules Docket.

Commenters wishing the FAA to acknowledge receipt of their comments submitted in response to this rule must submit a self-addressed, stamped postcard on which the following statement is made: ''Comments to Docket Number 96–NM–75–AD.'' The postcard will be date stamped and returned to the commenter.

The regulations adopted herein will not have substantial direct effects on the States, on the relationship between the national government and the States, or on the distribution of power and responsibilities among the various levels of government. Therefore, in accordance with Executive Order 12612, it is determined that this final rule does not have sufficient federalism implications to warrant the preparation of a Federalism Assessment.

For the reasons discussed above, I certify that this action (1) is not a ''significant regulatory action'' under Executive Order 12866; (2) is not a ''significant rule'' under DOT Regulatory Policies and Procedures (44 FR 11034, February 26, 1979); and (3) will not have a significant economic impact, positive or negative, on a substantial number of small entities under the criteria of the Regulatory Flexibility Act. A final evaluation has been prepared for this action and it is contained in the Rules Docket. A copy of it may be obtained from the Rules Docket at the location provided under the caption **ADDRESSES.**

List of Subjects in 14 CFR Part 39

Air transportation, Aircraft, Aviation safety, Safety.

Adoption of the Amendment

Accordingly, pursuant to the authority delegated to me by the Administrator, the Federal Aviation Administration amends part 39 of the Federal Aviation Regulations (14 CFR part 39) as follows:

PART 39—AIRWORTHINESS DIRECTIVES

1. The authority citation for part 39 continues to read as follows:

Authority: 49 U.S.C. 106(g), 40113, 44701.

§ 39.13 [Amended]

2. Section 39.13 is amended by removing amendment 39–9537 (61 FR 9607, March 11, 1996), and by adding a new airworthiness directive (AD), amendment 39–9581, to read as follows:

96–09–07 Boeing: Amendment 39–9581. Docket 96–NM–75–AD. Supersedes AD 96–06–01, Amendment 39–9537.

Applicability: Model 757 airplanes, certificated in any category, that are equipped with Moog spoiler actuators having Abex electro-hydraulic servo valves (EHSV), part number 72196, with the serial numbers listed in Table 1 of this AD:

TABLE 1

EHSV serial No.	Abex order No.*	Shipment Date*
AH–0001	C716657	8 November 1991.
AH–0002	C716657	8 November 1991.
AH–0003	C727995	25 August 1994.
AH–0004	C727995	25 August 1994.
AH–0005	C727995	25 August 1995.
AH–0006	C727995	25 August 1995.
AH–0007	C727995	25 August 1995.
13	C731181	12 June 1995.
49	C730878	01 June 1995.
61	C727955	13 September 1994.
131	C708905	13 November 89.
233	C727730	17 June 1994.
241	C731540	13 September 1995.
260	C727955	13 September 1994.
279	C728298	02 September 1994.
275	C727880	24 June 1994.
308	C725421	01 December 1993.
329	C727711	17 June 1994.
347	C727518	14 June 1994.
401	C728298	05 September 1994.
407	C727730	17 June 1994.
427	C731181	03 July 1995.
450	C731181	03 July 1995.
445	C706627	22 February 89.
457	C731663	12 September 1995.
456	C728887	28 November 1994.
463	C731435	21 August 1995.
484	C727748	22 June 1994.
515	C727745	24 June 1994.
559	C728290	05 September 1994.
563	C724224	14 September 1993.
579	C724176	14 September 1993.
595	C727735	24 January 1994.
611	C727955	14 September 1994.
607	C727997	20 July 1994.
647	C728459	10 October 1994.
726	C731096	04 September 1995.
725	C729525	19 December 1994.
819	C728135	03 August 1994.
890	C726803	06 April 1994.
874	C730890	26 April 1995.
909	C724877	29 November 1993.
912	C727977	04 August 1994.
991	C713602	10 December 1990.
998	C731477	4 September 1995.
1022	C708905	13 November 1989.
1023	C708905	13 November 1989.
1072	C709166	14 November 1989.
1148	C730192	13 March 1995.
1175	C723278	05 August 1993.
1227	C728303	31 August 1994.
1283	C731833	04 September 1995.
1487	C728549	04 October 1994.
1655	C728442	28 November 1994.
1780	C726757	06 April 1994.
1807	C728669	29 September 1994.
1862	C727625	17 June 1994.
1929	C727977	04 August 1994.
1986Z	C727730	17 June 1994.
2017Z	C725411	24 November 1993.

TABLE 1—Continued

EHSV serial No.	Abex order No.*	Shipment Date*
2034	C727730	17 June 1994.
2073	C731272	12 September 1995.
2125	C725713	12 January 1994.
2220	C729735	29 March 1995.
2334	C727730	17 June 1994.
2348	C727730	17 June 1994.
2426	C731623	12 July 1995.

*The Abex Order Number and Shipment Date are included in this listing to enable operators to review their records in order to determine if a suspect EHSV has been ordered, and if, or where, it has been installed on an airplane.

Note 1: This AD applies to each airplane identified in the preceding applicability provision, regardless of whether it has been modified, altered, or repaired in the area subject to the requirements of this AD. For airplanes that have been modified, altered, or repaired so that the performance of the requirements of this AD is affected, the owner/operator must request approval for an alternative method of compliance in accordance with paragraph (b) of this AD. The request should include an assessment of the effect of the modification, alteration, or repair on the unsafe condition addressed by this AD; and, if the unsafe condition has not been eliminated, the request should include specific proposed actions to address it.

Compliance: Required as indicated, unless accomplished previously.

To prevent a significant control upset of the airplane due to problems associated with incorrectly assembled Abex electro-hydraulic servo valves (EHSV) on certain Moog spoiler actuators, accomplish the following:

(a) Within 6 months after the effective date of this AD, perform the following procedure:

(1) While the airplane is on the ground, extend the flaps to 40 degrees. and visually inspect the spoiler actuator EHSV assembly to determine the location of the second stage bias spring end cap assembly.

(2) If the second stage bias spring cap assembly is on the aft or lower side of the EHSV assembly, prior to further flight, replace the EHSV, having Abex part number 72196, with a serviceable unit in accordance with the airplane maintenance manual.

Note 2: To be correctly positioned, the second stage bias spring cap assembly should be on the upper or forward side of the EHSV assembly. Appendix 1 of this AD provides a visual representation of the correct positioning of the EHSV assembly.

(b) An alternative method of compliance or adjustment of the compliance time that provides an acceptable level of safety may be used if approved by the Manager, Seattle Aircraft Certification Office (ACO), FAA, Transport Airplane Directorate. Operators shall submit their requests through an appropriate FAA Principal Maintenance Inspector, who may add comments and then send it to the Manager, Seattle ACO.

Note 3: Information concerning the existence of approved alternative methods of compliance with this AD, if any, may be obtained from the Seattle ACO.

(c) Special flight permits may be issued in accordance with sections 21.197 and 21.199 of the Federal Aviation Regulations (14 CFR 21.197 and 21.199) to operate the airplane to a location where the requirements of this AD can be accomplished.

(d) This amendment becomes effective on May 10, 1996.

Billing Code 4910–13–P

Appendix 1

757 SPOILER ACTUATOR INSTALLATION

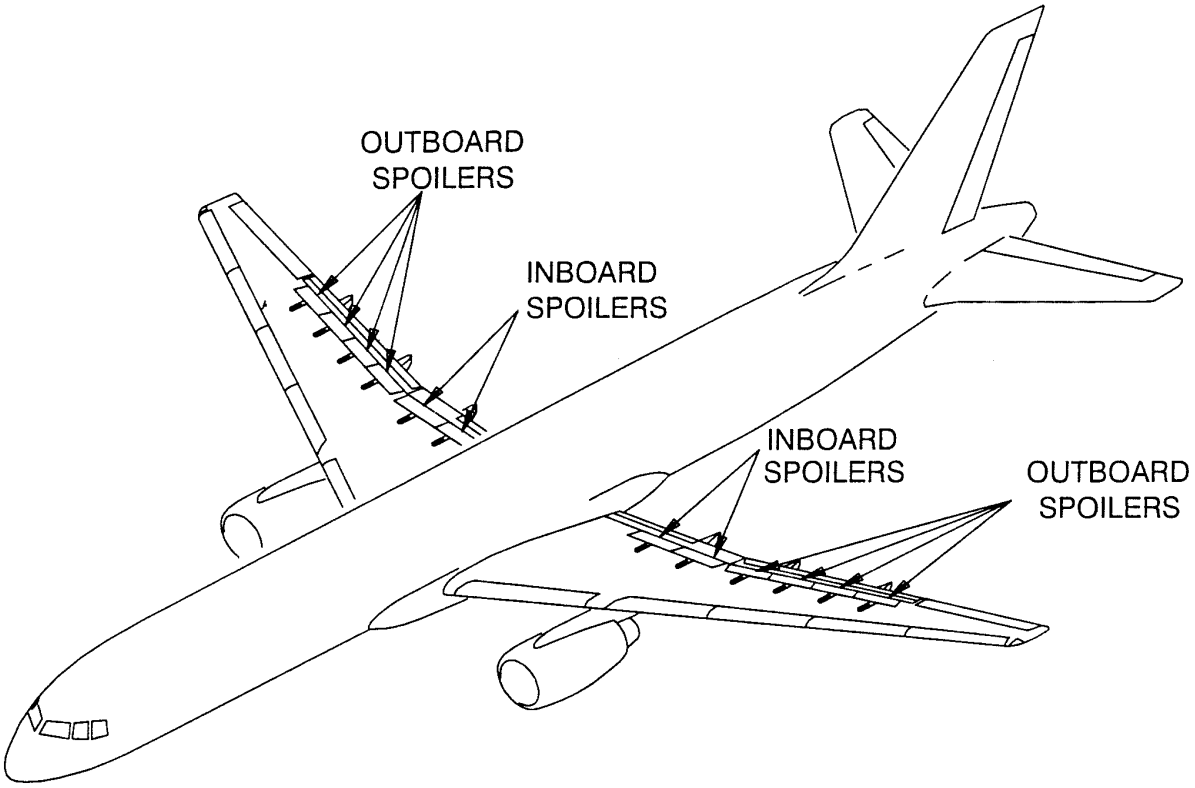

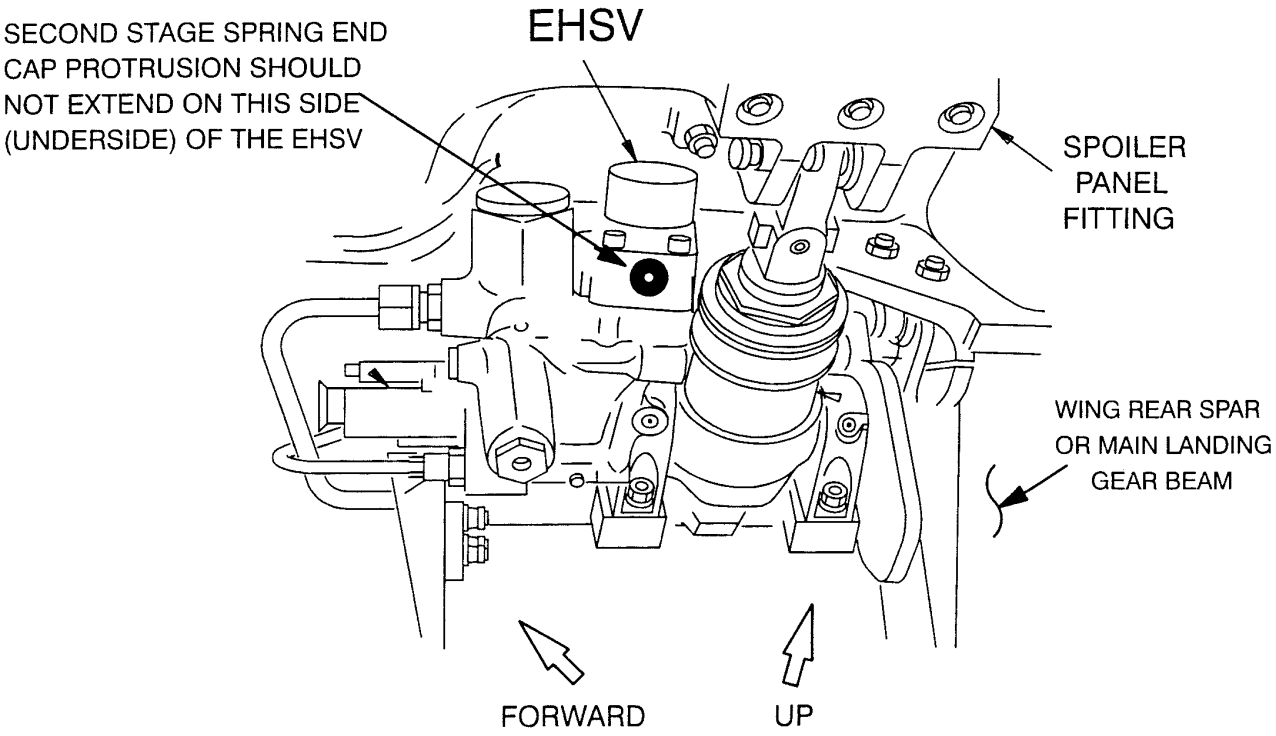

Issued in Renton, Washington, on April 19, 1996.

Darrell M. Pederson,

Acting Manager, Transport Airplane Directorate, Aircraft Certification Service.

[FR Doc. 96–10209 Filed 4–24–96; 8:45 am]

BILLING CODE 4910–13–C

14 CFR Part 39

[Docket No. 96–NM–74–AD; Amendment 39–9582; AD 96–01–04 R1]

Airworthiness Directives; Saab Model SAAB SF340A and SAAB 340B Series Airplanes

AGENCY: Federal Aviation Administration, DOT.

ACTION: Final rule; request for comments.

SUMMARY: This amendment revises an existing airworthiness directive (AD), applicable to certain Saab Model SAAB SF340A and SAAB 340B series airplanes, that currently requires revising the Airplane Flight Manual (AFM) to require verification that the auto-ignition system is operational; to define icing conditions at higher ambient temperatures; and to provide the flight crew with limitations and procedures to aid in the avoidance of engine power interruptions. The actions specified by that AD are intended to prevent failure of the auto-ignition system to re-light the engine in the event of power interruptions due to the ingestion of ice and/or slush into the engine, which could result in engine flameout and subsequent shutdown, and to provide the flight crew with guidance to aid in avoidance of such occurrences. This amendment clarifies certain requirements of the AFM revision. This amendment is prompted by communications received from affected operators that certain of the current requirements of the AD are unclear.

DATES: Effective May 10, 1996.

Comments for inclusion in the Rules Docket must be received on or before June 24, 1996.

ADDRESSES: Submit comments in triplicate to the Federal Aviation Administration (FAA), Transport Airplane Directorate, ANM–103, Attention: Rules Docket No. 96–NM–74–AD, 1601 Lind Avenue, SW., Renton, Washington 98055–4056.

This information may be examined at the FAA, Transport Airplane Directorate, 1601 Lind Avenue, SW., Renton, Washington; or at the Office of the Federal Register, 800 North Capitol Street, NW., suite 700, Washington, DC.

FOR FURTHER INFORMATION CONTACT: Ruth E. Harder, Aerospace Engineer, Standardization Branch, ANM–113, FAA, Transport Airplane Directorate, 1601 Lind Avenue, SW., Renton, Washington 98055–4056; telephone (206) 227–1721; fax (206) 227–1149.

SUPPLEMENTARY INFORMATION: On January 2, 1996, the FAA issued airworthiness directive (AD) 96–01–04, amendment 39–9480 (61 FR 511, January 8, 1996), which is applicable to certain Saab Model SAAB SF340A and SAAB 340B series airplanes. That AD requires revising the FAA-approved Airplane Flight Manual (AFM) to:

1. Require verification that the auto-ignition system is operational;

2. Define icing conditions at higher ambient temperatures; and

3. Povide the flight crew with limitations and procedures to aid in the avoidance of engine power interruptions.

That AD action was prompted by a report of complete power loss of the left engine and power fluctuations on the right engine as a result of build up of ice and/or slush in the engine inlet and subsequent ingestion into the engines. The actions required by that AD are intended to prevent failure of the auto-ignition system to re-light the engine in the event of power interruptions due to the ingestion of ice and/or slush into the engine, which could result in engine flameout and subsequent shutdown, and to provide the flight crew with guidance to aid in avoidance of such occurrences.

Since the issuance of that AD, the FAA has received communications from the Swedish airworthiness authority, Luftfartsverket (LFV), and various affected operators indicating that certain text of the AFM revision as cited in AD 96–01–04 is not clear.

Request to Clarify Frequency of Checks

Affected operators specifically request that the frequency of the auto-ignition system checks, as specified in the AFM revision contained in paragraphs (a)(1) and (a)(2) of AD 96–01–04, be clarified. As AD 96–01–04 was worded, some operators may have misinterpreted its requirements to mean that the engine must be shut down following each flight and restarted before the next flight.

The FAA finds that clarification is necessary to prevent such misinterpretation. The FAA did not intend that the AD require shutdown of the engine following each flight. The FAA acknowledges that some operators may elect not to shut down the engine following each flight. In such a case, this AD does not require that a check of the auto-ignition system be performed. Therefore, the FAA has determined that the limitations specified in paragraph (a)(1) and (a)(2) of AD 96–01–04 must be revised to clarify that the check of the auto-ignition system is required prior to each engine start and during each engine shutdown.

Request to Clarify Relationship of AD to MMEL

The LFV noted that the AFM revision specified in paragraphs (a)(1) and (a)(2) of AD 96–01–04 may imply that dispatch may occur indefinitely with an inoperative auto-ignition system.

The FAA finds that clarification of this point is necessary. The intent of AD 96–01–04 was that, if the auto-ignition system is found to be inoperative, dispatch should be accomplished in accordance with the Minimum Master Equipment List (MMEL). The FAA finds that the addition of that information to the AFM revision specified in paragraphs (a)(1) and (a)(2) of this AD will clarify the dispatch requirements.

Request to Clarify Definition of ''Icing Conditions''

For systems other than engine anti-ice activation, affected operators request that a separate and relieving definition of ''Icing Conditions'' of Outside Air Temperature (OAT) or Static Air Temperature (SAT) be included in paragraph (a)(3) of the AD, with the OAT or SAT criteria to be specified as +5 degrees Centigrade (C).

The FAA agrees that the definition of ''Icing Conditions'' needs to be clarified for systems other than engine anti-ice. The FAA finds that paragraph (a)(3) of the AD must be revised to expand the definition of ''Icing Conditions'' by including a separate definition for all airplane operations other than engine anti-ice, which specifies the OAT or SAT criteria as +5 degrees C.

Conclusion

Based on the issues raised by the affected operators and the LFV, the FAA finds that AD 96–01–04 must be revised as discussed previously. These revisions will ensure that the requirements of the AD are understood clearly. Clearer understanding will ensure that the intent of the AD is met and that the addressed unsafe condition is prevented.

Explanation of the Revised Rule

This airplane model is manufactured in Sweden and is type certificated for operation in the United States under the provisions of section 21.29 of the Federal Aviation Regulations (14 CFR 21.29) and the applicable bilateral airworthiness agreement.

Since an unsafe condition has been identified that is likely to exist or develop on other airplanes of the same type design registered in the United States, this AD revises AD 96–01–04 to continue to require verification that the auto-ignition system is operational; to define icing conditions at higher

ambient temperatures for engine anti-ice systems; and to provide the flight crew with limitations and procedures to aid in the avoidance of engine power interruptions. For Model SAAB 340B series airplanes having an auto-ignition system that is found to be inoperative, this AD also continues to require a test of the Np overspeed system to ensure that it is operative, and repair, if necessary.

In addition, this AD revises the AFM revision by:

1. Clarifying the times at which the auto-ignition checks are to be performed;

2. Specifying that the dispatch with the auto-ignition system inoperative shall be done in accordance with the current MMEL; and

3. Providing a relieving definition of Icing Conditions for systems other than engine anti-ice.

This is to be considered interim action until final action is identified, at which time the FAA may consider further rulemaking.

Effective Date of the Revised Rule

Since a situation exists that requires the immediate adoption of this regulation, it is found that notice and opportunity for prior public comment hereon are impracticable, and that good cause exists for making this amendment effective in less than 30 days.

Comments Invited

Although this action is in the form of a final rule that involves requirements affecting flight safety and, thus, was not preceded by notice and an opportunity for public comment, comments are invited on this rule. Interested persons are invited to comment on this rule by submitting such written data, views, or arguments as they may desire. Communications shall identify the Rules Docket number and be submitted in triplicate to the address specified under the caption ''ADDRESSES''. All communications received on or before the closing date for comments will be considered, and this rule may be amended in light of the comments received. Factual information that supports the commenter's ideas and suggestions is extremely helpful in evaluating the effectiveness of the AD action and determining whether additional rulemaking action would be needed.

Comments are specifically invited on the overall regulatory, economic, environmental, and energy aspects of the rule that might suggest a need to modify the rule. All comments submitted will be available, both before and after the closing date for comments, in the Rules Docket for examination by interested persons. A report that summarizes each FAA-public contact concerned with the substance of this AD will be filed in the Rules Docket.

Commenters wishing the FAA to acknowledge receipt of their comments submitted in response to this rule must submit a self-addressed, stamped postcard on which the following statement is made: ''Comments to Docket Number 96–NM–74–AD.'' The postcard will be date stamped and returned to the commenter.

Regulatory Impact

The regulations adopted herein will not have substantial direct effects on the States, on the relationship between the national government and the States, or on the distribution of power and responsibilities among the various levels of government. Therefore, in accordance with Executive Order 12612, it is determined that this final rule does not have sufficient federalism implications to warrant the preparation of a Federalism Assessment.

The FAA has determined that this regulation is an emergency regulation that must be issued immediately to correct an unsafe condition in aircraft, and that it is not a ''significant regulatory action'' under Executive Order 12866. It has been determined further that this action involves an emergency regulation under DOT Regulatory Policies and Procedures (44 FR 11034, February 26, 1979). If it is determined that this emergency regulation otherwise would be significant under DOT Regulatory Policies and Procedures, a final regulatory evaluation will be prepared and placed in the Rules Docket. A copy of it, if filed, may be obtained from the Rules Docket at the location provided under the caption ''ADDRESSES''.

List of Subjects in 14 CFR Part 39

Air transportation, Aircraft, Aviation safety, Safety.

Adoption of the Amendment

Accordingly, pursuant to the authority delegated to me by the Administrator, the Federal Aviation Administration amends part 39 of the Federal Aviation Regulations (14 CFR part 39) as follows:

PART 39—AIRWORTHINESS DIRECTIVES

1. The authority citation for part 39 continues to read as follows:

Authority: 49 U.S.C. 106(g), 40113, 44701.

§ 39.13 [Amended]

2. Section 39.13 is amended by removing amendment 39–9480 (61 FR 511, January 8, 1996), and by adding a new airworthiness directive (AD), amendment 39–9582, to read as follows:

96–01–04 R1 SAAB Aircraft AB: Amendment 39–9582. Docket 96–NM–74–AD. Revises AD 96–01–04, Amendment 39–9480.

Applicability: Model SAAB SF340A series airplanes, serial numbers 004 through 159 inclusive; and Model SAAB 340B series airplanes, serial numbers 160 and subsequent; certificated in any category.

Note 1: This AD applies to each airplane identified in the preceding applicability provision, regardless of whether it has been modified, altered, or repaired in the area subject to the requirements of this AD. For airplanes that have been modified, altered, or repaired so that the performance of the requirements of this AD is affected, the owner/operator must request approval for an alternative method of compliance in accordance with paragraph (c) of this AD. The request should include an assessment of the effect of the modification, alteration, or repair on the unsafe condition addressed by this AD; and, if the unsafe condition has not been eliminated, the request should include specific proposed actions to address it.

Compliance: Required as indicated, unless accomplished previously.

To prevent failure of the auto-ignition system to re-light the engine in the event of power interruptions due to the ingestion of ice and/or slush into the engine, which could result in engine flameout and subsequent shutdown; and to provide the flight crew with guidance to aid in avoidance of such occurrences; accomplish the following:

(a) Within 10 days after the effective date of this AD, revise the FAA-approved Airplane Flight Manual (AFM) to include the text contained in paragraphs (a)(1), (a)(2), (a)(3), and (a)(4) of this AD, as applicable. This may be accomplished by inserting a copy of this AD into the AFM.

(1) For Model SAAB SF340A series airplanes: Insert the following sub-section in the Limitations Section of the AFM:

''IGNITION SYSTEM

Prior to each engine start, perform a check of the auto-ignition system.

- Select batteries ON (external power ON or OFF).
- Check that IGN switches are in NORM position.
- Advance PLs above FLT IDLE and verify the IGN lights in the Flight Status Panel (FSP) illuminate. In bright sunlight, shade FSP to ensure IGN lights are visible when illuminated.
- Retard PLs to GND IDLE. (IGN lights should go out.)
- If an IGN light fails to illuminate when PLs are above FLT IDLE, the auto-ignition system is considered to be inoperative.

If the auto-ignition system is inoperative:

- BEFORE ENTERING ICING CONDITIONS, SET IGNITION TO CONT. Maintain ignition in CONT until touchdown, even if icing conditions cease to exist.

• The obligation to comply with the current version of the Master Minimum Equipment List (MMEL), Revision 11, or later approved revisions is not affected by this limitation.''

(2) For Model SAAB 340B series airplanes: Insert the following sub-section in the Limitations Section of the AFM:

''IGNITION SYSTEM

During each engine shutdown, perform a check of the auto-ignition system.

• Adjust Ng to approximately 75%–77%; minimum is 75%.

• Shut down the engines (CL to FUEL OFF).

• Verify the IGN lights in the Flight Status Panel (FSP) illuminate while Ng is above 62%. In bright sunlight, shade the FSP to ensure that lights are visible when illuminated.

• If an IGN light fails to illuminate, the auto-ignition system is considered to be inoperative.

• Retard PLs to GND IDLE.

If the auto-ignition system is inoperative:

• BEFORE ENTERING ICING CONDITIONS, SET IGNITION TO CONT. Maintain ignition in CONT until touchdown, even if icing conditions cease to exist.''

• The obligation to comply with the current version of the Master Minimum Equipment List (MMEL), Revision 11, or later approved revisions is not affected by this limitation.

(3) For all airplanes: Insert the following in the Limitations Section of the AFM, under Icing Conditions:

''For engine anti-ice system activation, icing conditions exist when visible moisture in any form is present (such as clouds, fog with visibility of one mile or less, rain, snow, sleet, ice crystals) or standing water, slush, or snow (hard packed snow excluded) is present on the ramps, taxiways, or runways and the OAT or SAT is +10 degrees C and below during ground and flight operation.

For all airplane operations other than engine anti-ice, icing conditions exist when visible moisture in any form is present (such as clouds, fog with visibility of one mile or less, rain, snow, sleet, ice crystals) or standing water, slush, or snow (hard packed snow excluded) is present on the ramps, taxiways or runways and the OAT or SAT is +5 degrees C and below during ground and flight operation. ''

(4) For all airplanes: Insert the following in the Normal Procedures Section of the AFM, under Operation in Icing Conditions:

''CAUTION

Engine power interruptions may occur at ISA to ISA +20 degrees Celsius temperature and in light (or undetected) icing conditions, or shortly after exiting these conditions. Engine function will normally be recovered by the auto-ignition system before any serious loss of power. To aid in avoidance of these occurrences:

• Engine anti-ice systems must be activated prior to entering icing conditions, and maintained ON for at least 5 minutes after exiting icing conditions.''

(b) For Model SAAB 340B series airplanes: If an auto-ignition system is found to be inoperative, prior to further flight, perform an Np overspeed test to ensure that the Np overspeed system is operative, in accordance with the procedures specified in General Electric Maintenance Manual SEI–576. If the Np overspeed system is found to be inoperative, prior to further flight, repair in accordance with the procedures specified in General Electric Maintenance Manual SEI–576.

(c) An alternative method of compliance or adjustment of the compliance time that provides an acceptable level of safety may be used if approved by the Manager, Standardization Branch, ANM–113, FAA, Transport Airplane Directorate. Operators shall submit their requests through an appropriate FAA Principal Maintenance Inspector, who may add comments and then send it to the Manager, Standardization Branch, ANM–113.

Note 2: Information concerning the existence of approved alternative methods of compliance with this AD, if any, may be obtained from the Standardization Branch, ANM–113.

(d) Special flight permits may be issued in accordance with sections 21.197 and 21.199 of the Federal Aviation Regulations (14 CFR 21.197 and 21.199) to operate the airplane to a location where the requirements of this AD can be accomplished.

(e) This amendment becomes effective on May 10, 1996.

Issued in Renton, Washington, on April 19, 1996.

Darrell M. Pederson,

Acting Manager, Transport Airplane Directorate, Aircraft Certification Service.

[FR Doc. 96–10210 Filed 4–24–96; 8:45 am]

BILLING CODE 4910–13–P

CONSUMER PRODUCT SAFETY COMMISSION

16 CFR Parts 1500 and 1507

Large Multiple-tube Fireworks Devices; Correction

AGENCY: Consumer Product Safety Commission (CPSC).

ACTION: Final rule; correction.

SUMMARY: CPSC is correcting errors in its amendment to the fireworks regulations under the Federal Hazardous Substances Act that appeared in the Federal Register on March 26, 1996 (61 FR 13084). Those amendments will require that large multiple-tube fireworks devices that have any tube with an inner diameter of 1.5 inches (3.8 cm) or greater not tip over when inclined at an angle of 60 degrees from the horizontal.

EFFECTIVE DATE: March 26, 1997.

FOR FURTHER INFORMATION CONTACT: Samuel B. Hall, Office of Compliance, Consumer Product Safety Commission, Washington, DC 20207–0001; telephone (301) 504–0400, ext. 1371.

SUPPLEMENTARY INFORMATION: On March 26, 1996, the CPSC published an amendment to the fireworks regulations under the Federal Hazardous Substances Act (61 FR 13084). Those amendments will require that large multiple-tube fireworks devices that have any tube with an inner diameter of 1.5 inches (3.8 cm) or greater not tip over when inclined at an angle of 60 degrees from the horizontal. This requirement is intended to reduce the risk of injury posed when these fireworks devices tip over during firing. If they tip over, subsequent tubes may discharge in the direction of spectators or others in the vicinity. The amendment will become effective March 26, 1997.

The errors occur in new paragraph 16 CFR 1500.17(a)(12(i), at page 13095 of the Federal Register document of March 26, 1996. One of the errors correctly stated that the requirement would apply to the subject devices that first enter commerce or are imported on or after the date that is 1 year after publication. However, that paragraph should instead have stated the actual date (March 26, 1997).

The second error is that the reference to the minimum tip angle as ''greater than 60 degrees'' should have read ''less than 60 degrees''.

Accordingly, the following correction is made in the listing of banned hazardous substances at 16 CFR 1500.17(a)(12)(i) published in the Federal Register on March 26, 1996 (61 FR 13084):

1. Section 1500.17(a)(12)(i) on page 13095, column 3, is correctly revised to read as follows:

§ 1500.17 Banned hazardous substances

(a) * * *

(12)(i) Large multiple-tube devices. Multiple-tube mine and shell fireworks devices that first enter commerce or are imported on or after March 26, 1997, that have any tube measuring 1.5 inches (3.8 cm) or more in inner diameter, and that have a minimum tip angle less than 60 degrees when tested in accordance with the procedure of § 1507.12 of this part.

* * * * *

Dated: April 17, 1996.

Sadye E. Dunn,

Secretary, Consumer Product Safety Commission.

[FR Doc. 96–9995 Filed 4–24–96; 8:45 am]

BILLING CODE 6355–01–P

DEPARTMENT OF TRANSPORTATION

Federal Highway Administration

23 CFR Parts 710, 712, 720, and 740

[FHWA Docket No. 95–18]

RIN 2125–AC17

Right-of-Way Program Administration; Removal of Obsolete and Redundant Regulations

AGENCY: Federal Highway Administration (FHWA), DOT.

ACTION: Interim final rule; request for comments.

SUMMARY: This document removes regulations concerning right-of-way program administration which are obsolete and/or redundant. This action is in response to the President's Regulatory Reinvention Initiative. The removed regulatory provisions are duplicated or addressed elsewhere in FHWA/DOT regulations or are unnecessary for current programs.

DATES: This interim rule is effective May 28, 1996. Comments are due on or before June 24, 1996.

ADDRESSES: Submit written, signed comments to FHWA Docket No. 95–18, Federal Highway Administration, Room 4232, HCC–10, Office of the Chief Counsel, 400 Seventh Street, SW., Washington, D.C. 20590. All comments received will be available for examination at the above address between 8:30 a.m. and 3:30 p.m., e.t., Monday through Friday, except Federal holidays. Those desiring notification of receipt of comments must include a self-addressed, stamped envelope or postcard.

FOR FURTHER INFORMATION CONTACT: Mr. Robert A. Johnson, Office of Real Estate Services, (202) 366–2020, or Mr. Reid Alsop, Attorney, Office of Chief Counsel, HCC–31, (202) 366–1371. Office hours are from 7:45 a.m. to 4:15 p.m., e.t., Monday through Friday, except Federal holidays.

SUPPLEMENTARY INFORMATION: On November 6, 1995, the FHWA published in the Federal Register (60 FR 56004) an advance notice of proposed rulemaking (ANPRM) requesting comment on the content of 23 CFR parts 710 through 740. Twenty comments were received from individuals (2), private groups or organizations (2), and State transportation agencies (16).

Based on the responses to the ANPRM and other factors, the FHWA concludes that a comprehensive revision of the Right-of-Way related regulations is required. While such a revision is appropriate, several other regulatory revisions are currently underway that will, either directly or indirectly, affect right-of-way considerations. The FHWA will coordinate development of a notice of proposed rulemaking (NPRM) governing right-of-way/real estate programs with other related regulations now under review governing new administrative procedures and environmental issues to ensure that maximum consistency with current practice is achieved.

In the interim, the FHWA has identified numerous provisions that are no longer needed and should be removed from the regulations. Four whole parts or subparts identified during the review of the regulations as no longer needed are removed by this rule. These four include:

(1) 23 CFR part 710, subpart D—Civil Rights. This subpart of the regulations contains provisions relating civil rights under Title VI of the Civil Rights Act of 1964 to the right-of-way acquisition function. This subpart was published in 1974 and was based on provisions contained in 49 CFR part 21 issued in 1970. Since the original issuance, subchapter C—Civil Rights was added to 23 CFR. Subchapter C provides guidance and policy for implementing Title VI program requirements throughout FHWA and addresses State highway agency responsibilities in this regard. The provisions in 49 CFR part 21 and 23 CFR subchapter C contain the more current provisions relating to Civil Rights matters and are the sections of the regulations used to assess compliance. The older provisions in 23 CFR part 710, subpart D, while still relevant as guidance, are no longer needed, having been replaced by the more comprehensive provisions in 23 CFR subchapter C.

(2) 23 CFR part 712, subpart H—Land Service Facilities. This subpart contains policy guidance on Federal participation associated with land service facilities designed for access to properties affected by a highway improvement. The full control of access features associated with the Interstate system, along with the cost-to-complete funding basis for that system, necessitated regulations to assure that land service facilities (construction items) incorporated in project design were either clearly beneficial to the public or economically justified if beneficial solely to an individual property owner. The policy had existed as guidelines prior to adoption as a regulation in 1977, and has since been adopted within most State highway agencies— design development processes. The FHWA recognizes that most States now have policies meeting the basic intent of this subpart. Current funding programs are no longer based on cost-to-complete but are limited to fixed allocations. Our program emphasis is not directed at new limited access facilities. Therefore, no current interest is served by retaining this subpart.

(3) 23 CFR part 720—Appraisal. The content in this part covers employment and contracting provisions for acquiring agencies using fee appraiser and specialist services. The current content in this part is the residual portion of regulations originally issued in 1973 that covered appraisal documentation and contracting standards. The appraisal documentation standards were incorporated into 49 CFR part 24 in 1989 as part of the effort to develop a single government-wide rule implementing the Uniform Act (Pub. L. 91–646). The employment and contracting provisions contained in this part, while still considered good practice, are no longer needed to address our current programs. States have developed their own set of procedures on how to handle contracting for services under government-wide rules issued by OMB as implemented within DOT by 49 CFR part 18.

(4) 23 CFR part 740—Relocation Assistance. This part of the regulations is a residual of a larger set originally issued in 1976 governing the implementation of the relocation program under the Uniform Act. The main portion of the regulations related to this topic was incorporated in 49 CFR part 24 in 1989. What was retained at that time was participation, organization and contracting requirements. The contracting provisions found in this part are no longer appropriate as they either duplicate similar provisions found elsewhere in 23 CFR or can be addressed through implementation of the government-wide rules on contracting for services covered by 49 CFR part 18. The participation and organizational sections in this part are also either covered elsewhere in 23 CFR or no longer relate to current programs.

The removal of the above parts and subparts is not considered a major or significant change in the basic programs of FHWA and should not be considered as a relaxation of preexisting standards, or an expansion of Federal participation limits that pertained to the subjects contained therein. The removal is solely to reduce redundancy and eliminate prescriptive portions of existing regulations that have been adopted as standardized procedures over time by State highway agencies.

Rulemaking Analyses and Notices

The FHWA is waiving prior notice and opportunity for public comment on this rule because it is considered unnecessary within the meaning of section 4(b)(3)(B) of the Administrative Procedures Act, 5 USC 553(b)(3)(B). Removal of the identified sections is unlikely to engender public comment. The FHWA believes that the promulgation of this interim rule will eliminate obsolete provisions in the CFR enhancing the ease with which these regulations can be understood by the public. Nevertheless, the FHWA is opening a public docket for this rule and providing 60 days for receipt of public comment. The FHWA will consider all comments received during this 60 day period in determining whether any revision is necessary to the rule published today.

Executive Order 12866 (Regulatory Planning and Review) and DOT Regulatory Policies and Procedures

The FHWA has determined that this action is not a significant regulatory action within the meaning of Executive Order 12866 or significant within the meaning of Department of Transportation regulatory policies and procedures. Since this Interim Final Rule reduces obsolete regulatory language it will not have an adverse annual effect on the economy, interfere with the work of another agency, materially alter the budget impact of grantees, or raise novel legal or policy issues inconsistent with the principles set forth in this Executive Order. It is anticipated that the economic impact of this rulemaking will be minimal; therefore, a full regulatory evaluation is not required.

Regulatory Flexibility Act

This rule eliminates obsolete regulatory language used in the administration of right-of-way programs, and in so doing does not add to the burdens imposed on a substantial number of small entities.

Executive Order 12612 (Federalism Assessment)

This action has been analyzed in accordance with the principles and criteria contained in Executive Order 12612, and it has been determined that this action does not have sufficient federalism implications to warrant the preparation of a federalism assessment.

Executive Order 12372 (Intergovernmental Review)

Catalog of Federal Domestic Assistance Number 20.205 Highway Planning and Construction. The regulations implementing Executive Order 12372 regarding intergovernmental consultation on Federal programs and activities apply to this program.

Paperwork Reduction Act

This action does not contain a collection of information requirement for purposes of the Paperwork Reduction Act of 1995, 44 U.S.C. 3501 *et seq.*

National Environmental Policy Act

The agency has analyzed this action for the purpose of the National Environmental Policy Act of 1969 (42 U.S.C. 4321 *et seq.*) and has determined that this action would not have any effect on the quality of the environment.

Regulation Identification Number

A regulation identification number (RIN) is assigned to each regulatory action listed in the Unified Agenda of Federal Regulations. The Regulatory Information Service Center publishes the Unified Agenda in April and October of each year. The RIN contained in the heading of this document can be used to cross reference this action with the Unified Agenda.

List of Subjects in 23 CFR Parts 710, 712, 720, and 740

Grant programs—transportation, Highways and roads, Real property acquisition, Relocation assistance, Rights-of-way.

For the reasons set out in the preamble, and under the authority of 23 U.S.C. 315 and 49 CFR 1.48, title 23, Code of Federal Regulations, is amended as set forth below.

Issued on: April 18, 1996.

Rodney E. Slater,

Federal Highway Administrator.

In consideration of the foregoing, the FHWA amends chapter I of title 23, Code of Federal Regulations, as follows:

PART 710—RIGHT-OF-WAY—GENERAL

1. The authority citation for part 710 continues to read as follows:

Authority: 23 U.S.C. 101(a) and 315; 42 U.S.C. 2000d *et seq.*, 4633, 4651–4655; 49 CFR 1.48 (b) and (cc) and parts 21 and 24; 23 CFR 1.32.

§§ 710.401 through 710.405 (Subpart D)—Civil Rights [Removed]

2. In part 710, subpart D, consisting of §§ 710.401 through 710.405, is removed.

PART 712—THE ACQUISITION FUNCTION

3. The authority citation for part 712 continues to read as follows:

Authority: 23 U.S.C. 101(a), 107, 108, 111, 114, 204, 210, 308, 315, 317, and 323; 42 U.S.C. 2000d–1, 4633, 4651–4655; 49 CFR 1.48 (b) and (cc) and part 24; 23 CFR 1.32.

§§ 712.801, 712.803, and 712.805 (Subpart H)—Land Service Facilities [Removed]

4. In part 712, subpart H, consisting of §§ 712.801, 712.803, and 712.805 is removed.

PART 720—APPRAISAL [REMOVED]

5. Part 720 of chapter I is removed.

PART 740—RELOCATION ASSISTANCE [REMOVED]

6. Part 740 of chapter I is removed.

[FR Doc. 96–10207 Filed 4–24–96; 8:45 am]

BILLING CODE 4910–22–P

National Highway Traffic Safety Administration

23 CFR Part 1309

[NHTSA Docket No. 82–18; Notice 14]

RIN 2127–AG22

Incentive Grant Criteria for Alcohol Traffic Safety Programs

AGENCY: National Highway Traffic Safety Administration (NHTSA), Department of Transportation (DOT).

ACTION: Final rule.

SUMMARY: This final rule removes Part 1309 from title 23 of the Code of Federal Regulations (CFR). Part 1309 established criteria for awarding incentive grants to States that implemented effective programs to reduce drunk driving and driving under the influence of a controlled substance, in accordance with section 408 of title 23, United States Code. The regulation is being removed because it is unnecessary and obsolete. Funds for the section 408 program have not been authorized since FY 1994.

EFFECTIVE DATE: May 28, 1996.

FOR FURTHER INFORMATION CONTACT: Ms. Marlene Markison, Office of State and Community Services, National Highway Traffic Safety Administration, 400 7th Street, SW., Washington, DC 20590, telephone (202) 366–2121; or Ms. Heidi L. Coleman, Office of Chief Counsel, Room 5219, National Highway Traffic Safety Administration, 400 Seventh Street, SW., Washington, DC 20590, telephone (202) 366–1834.

SUPPLEMENTARY INFORMATION: On March 4, 1995, President Clinton directed all Federal Departments and agencies to take four steps to overhaul the nation's regulatory system. The first step was to conduct a page-by-page review of all agency regulations now in force and eliminate or revise those that are outdated or otherwise in need of reform. The review was to include careful consideration of a number of issues, including whether the regulation is obsolete, whether its intended goal can be achieved in more efficient less intrusive ways, or whether States or local governments can do the job (making Federal regulation unnecessary).

NHTSA conducted a thorough, page-by-page review of all agency regulations, including those that pertain to State and community highway safety programs.

As a result of these efforts, NHTSA has determined that Part 1309 should be removed from title 23 of the Code of Federal Regulations (CFR), because it is unnecessary and obsolete.

Part 1309 established criteria for awarding incentive grants to States that implemented effective programs to reduce drunk driving and driving under the influence of a controlled substance, in accordance with 23 U.S.C. 408. Part 1309 was first published in the Federal Register, as 23 CFR Part 1209, on February 7, 1983 (48 FR 5545). It was amended and redesignated as 23 CFR Part 1309 on June 19, 1986 (51 FR 22276). It was further amended on July 22, 1987 (52 FR 27614), May 18, 1988 (53 FR 17692) and August 25, 1988 (53 FR 32375).

Funds for the section 408 program have not been authorized since FY 1994. Because the regulation implements a program which is no longer active, and currently appears in the CFR among regulations that implement programs that continue to be active, its removal will avoid confusion for potential grant applicants. States that have remaining section 408 balances must expend their funds in accordance with 23 U.S.C. 408, OMB Circular A–87, other applicable grant funding policies (for current policies, States should consult the NHTSA/FHWA Highway Safety Grant Management Manual) and the agreements the States entered with NHTSA when they received their funds.

Rulemaking Analyses and Notices

(a) Executive Order 12866 (Regulatory Planning and Review) and DOT Regulatory Policies and Procedures

NHTSA has considered the impact of this rulemaking action under E.O. 12866 and the Department of Transportation's regulatory policies and procedures. This rulemaking document was not reviewed under E.O. 12866, ''Regulatory Planning and Review.'' This action has been determined to be not ''significant'' under the Department of Transportation's regulatory policies and procedures.

(b) Regulatory Flexibility Act

In compliance with the Regulatory Flexibility Act (Pub. L. 96–354, 5 U.S.C. 601–612), the agency has evaluated the effects of this rule on small entities. Based on the evaluation, the agency hereby certifies that this action will not have a significant economic impact on a substantial number of small entities. Accordingly, the preparation of a Regulatory Flexibility Analysis is unnecessary.

(c) Executive Order 12612 (Federalism Assessment)

This action has been analyzed in accordance with the principles and criteria contained in Executive Order 12612, and it has been determined that this action does not have sufficient federalism implications to warrant the preparation of a federalism assessment.

(d) Paperwork Reduction Act

This action does not contain a collection of information requirement for purposes of the Paperwork Reduction Act of 1980, 44 U.S.C. 3501 *et seq.*

(e) National Environmental Policy Act

The agency has analyzed this action for the purpose of the National Environmental Policy Act of 1969 (42 U.S.C. 4321 *et seq.*) and has determined that this action would not have any effect on the quality of the environment.

(f) Executive Order 12778 (Civil Justice Reform)

This amendment to the regulation does not have any preemptive or retroactive effect. It imposes no requirements on the States, but rather simply removes from the regulation outdated and obsolete provisions that no longer apply. The enabling legislation does not establish a procedure for judicial review of final rules promulgated under its provisions. There is no requirement that individuals submit a petition for reconsideration or other administrative proceedings before they may file suit in court.

Notice and Comment

Because the amendments relate to a grant program and are therefore not covered by the Administrative Procedure Act, and since they merely contain technical changes that remove outdated and obsolete provisions from the regulation and do not impose any additional requirements, the amendments are being made without prior notice and opportunity to comment.

List of Subjects in 23 CFR Part 1309

Alcohol abuse, Drug abuse, Grant programs—transportation, Highway safety.

Under the authority of 49 CFR Part 1.50, Title 23 of the Code of Federal Regulations is amended by removing Part 1309.

Issued on: April 19, 1996.

Ricardo Martinez,

Administrator, National Highway Traffic Safety Administration.

[FR Doc. 96–10121 Filed 4–24–96; 8:45 am]

BILLING CODE 4910–59–P

DEPARTMENT OF HOUSING AND URBAN DEVELOPMENT

Office of the Assistant Secretary for Fair Housing and Equal Opportunity

24 CFR Parts 100, 103, and 109

[Docket No. FR–4029–C–02]

RIN 2529–AA78

Regulatory Reinvention; Streamlining of HUD's Regulations Implementing the Fair Housing Act; Correction

AGENCY: Office of the Assistant Secretary for Fair Housing and Equal Opportunity, HUD.

ACTION: Final rule, correction.

SUMMARY: On April 1, 1996 (61 FR 14378), HUD published a final rule streamlining its regulations implementing the Fair Housing Act. The April 1, 1996 final rule implemented the Housing for Older Persons Act of 1995 by substantively revising HUD's regulations governing housing for persons 55 years of age or older. However, the final rule failed to incorporate certain changes which HUD had determined were necessary. The purpose of this document is to correct the April 1, 1996 final rule by making the required amendments to HUD's regulations governing housing for older persons. For the convenience of readers, HUD is re-publishing the entire regulatory text of the April 1, 1996 final rule, but incorporating the correction made by this document.

EFFECTIVE DATE: May 1, 1996.

FOR FURTHER INFORMATION CONTACT: Susan Forward, Deputy Assistant

Secretary for Enforcement and Investigations, Room 5106, Department of Housing and Urban Development, 451 Seventh Street, SW., Washington, DC 20410, telephone number (202) 708–4211. For hearing- and speech-impaired persons, this number may be accessed via TTY by calling the Federal Information Relay Service at 1–800–877–8339. (With the exception of the ''800'' number, these numbers are not toll free.)

SUPPLEMENTARY INFORMATION: On April 1, 1996 (61 FR 14378), HUD published a final rule which, among other streamlining amendments, implemented the Housing for Older Persons Act of 1995 (Pub.L. 104–76, approved December 28, 1996). Specifically, the April 1, 1996 rule merged 24 CFR 100.304 and 100.315, and revised § 100.304 to track the statutory language. In addition, the provisions describing the ''significant facilities and services'' requirement for ''55 or over'' housing in §§ 100.305, 100.306, 100.307, 100.310, and 100.316, were deleted to conform to the new requirements for ''55 or over'' housing established by the Housing for Older Persons Act.

However, the April 1, 1996 final rule failed to incorporate certain changes that HUD had determined were necessary. Revised § 100.304 retained most of the substance of former 24 CFR 100.315(b)(4). This provision concerned the ability of housing providers to meet the 80 percent occupancy requirement for ''55 or over'' housing by reserving unoccupied units for occupancy by persons 55 years of age or older. HUD had decided that removal of former 24 CFR 100.315(b)(4) was necessary for complete and effective implementation of the Housing for Older Persons Act. This document makes the necessary correction. For the convenience of readers, HUD is re-publishing the entire regulatory text of the April 1, 1996 final rule, but incorporating the correction made by this document.

Accordingly, FR Doc. FR–4029–F–01, Regulatory Reinvention; Streamlining of HUD's Regulations Implementing the Fair Housing Act, published in the Federal Register on April 1, 1996 (61 FR 14378) is corrected by re-publishing the regulatory text to read as follows:

PART 100—DISCRIMINATORY CONDUCT UNDER THE FAIR HOUSING ACT

1. The authority citation for part 100 continues to read as follows:

Authority: 42 U.S.C. 3535(d), 3600–3619.

2. Section 100.304 is revised to read as follows:

§ 100.304 55 or over housing.

(a) The provisions regarding familial status shall not apply to housing intended and operated for occupancy by at least one person 55 years of age or older per unit pursuant to this section.

(b) In order to qualify as housing for older persons under this section, at least 80 percent of the units in the housing facility must be occupied by at least one person 55 years of age or older, except that a newly constructed housing facility for first occupancy after March 12, 1989, need not comply with this section until 25 percent of the units in the facility are occupied.

(c) Housing satisfies the requirements of this section even though:

(1) On September 13, 1988, under 80 percent of the occupied units in the housing facility are occupied by at least one person 55 years of age or older per unit, provided that at least 80 percent of the units that are occupied after September 13, 1988, are occupied by at least one person 55 years of age or older.

(2) There are unoccupied units, provided that at least 80 percent of the occupied units are occupied by at least one person 55 years of age or older.

(3) There are units occupied by employees of the housing provider (and family members residing in the same unit) who are under 55 years of age, provided the employees perform substantial duties directly related to the management or maintenance of the housing.

§§ 100.305, 100.306, 100.307, 100.310, 100.315, and 100.316 [Removed]

3. Sections 100.305, 100.306, 100.307, 100.310, 100.315, and 100.316 are removed.

PART 103—FAIR HOUSING COMPLAINT PROCESSING

4. The authority citation for part 103 is revised to read as follows:

Authority: 42 U.S.C. 3535(d), 3600–3619.

5. Section 103.30 is amended by revising paragraph (b) to read as follows:

§ 103.30 Form and content of complaint.

* * * * *

(b) The Assistant Secretary may require complaints to be made on prescribed forms.

* * * * *

§ 103.105 [Amended]

6. Section 103.105 is amended by removing paragraph (a) and removing the paragraph designation ''(b)'' from paragraph (b).

7. Section 103.110 is amended by revising paragraph (c) to read as follows:

§ 103.110 Reactivation of referred complaints.

* * * * *

(c) The substantially equivalent State or local agency has failed to commence proceedings with respect to the complaint within 30 days of the date that it received the notification and referral of the complaint; or the agency commenced proceedings within this 30-day period, but the Assistant Secretary determines that the agency has failed to carry the proceedings forward with reasonable promptness.

8. Section 103.225 is revised to read as follows:

§ 103.225 Completion of investigation.

The investigation will remain open until a determination is made under § 103.400, or a conciliation agreement is executed and approved under § 103.310. Unless it is impracticable to do so, the Assistant Secretary will complete the investigation of the alleged discriminatory housing practice within 100 days of the filing of the complaint (or where the Assistant Secretary reactivates the complaint, within 100 days after service of the notice of reactivation under § 103.115). If the Assistant Secretary is unable to complete the investigation within the 100-day period, HUD will notify the aggrieved person and the respondent, by mail, of the reasons for the delay.

PART 109—[REMOVED]

9. Part 109 is removed.

Dated: April 17, 1996.

Elizabeth K. Julian,

Assistant Secretary for Fair Housing and Equal Opportunity.

[FR Doc. 96–10288 Filed 4–24–96; 8:45 am]

BILLING CODE 4210–28–P

---

24 CFR Part 3280

[Docket No. FR–4025–C–02]

RIN 2502–AG70

Office of the Assistant Secretary for Housing-Federal Housing Commissioner; Federal Manufactured Housing Program; Streamlining Final Rule; Correction

AGENCY: Office of the Assistant Secretary for Housing-Federal Housing Commissioner, HUD.

ACTION: Correction to final rule.

SUMMARY: On March 15, 1996 (61 FR 10858), the Department published a final rule streamlining its regulations under the National Manufactured Housing Construction and Safety Standards Act of 1974. In part, this final

rule removed part 3283 from the Code of Federal Regulations and made related conforming changes in other provisions in the manufactured housing regulations. However, one conforming change was inadvertently omitted from the rule. Therefore, this correction revises § 3280.3 in the manufactured housing regulations to delete a reference to part 3283, which was removed by the March 15 rule.

EFFECTIVE DATE: April 25, 1996.

FOR FURTHER INFORMATION CONTACT: David R. Williamson, Director, Office of Consumer and Regulatory Affairs, Department of Housing and Urban Development, Room 5241, Washington, DC; telephone number: (202) 755–4560 (this is not a toll-free number). For hearing- and speech-impaired persons, this number may be accessed via TTY (text telephone) by calling the Federal Information Relay Service at 1–800–877–8339.

SUPPLEMENTARY INFORMATION: Accordingly, FR Doc. 96–6163, Federal Manufactured Housing Program; Streamlining Final Rule (FR–4025–F–01), published on March 15, 1996, is corrected by adding the following amendment in title 24 of the Code of Federal Regulations:

PART 3280—MANUFACTURED HOME CONSTRUCTION AND SAFETY STANDARDS

1. The authority citations for part 3280 continues to read as follows:

Authority: 42 U.S.C. 3535(d), 5403, and 5424.

2. Section 3280.3 is revised to read as follows:

§ 3280.3 Manufactured home procedural and enforcement regulations and consumer manual requirements.

A manufacturer must comply with the requirements of this part 3280, part 3282 of this chapter, and 42 U.S.C. 5416.

Dated: April 19, 1996.

Camille E. Acevedo,

Assistant General Counsel for Regulations.

[FR Doc. 96–10285 Filed 4–24–96; 8:45 am]

BILLING CODE 4210–27–P

DEPARTMENT OF THE TREASURY

31 CFR Part 103

RIN 1506–AA13

Requirement to Report Suspicious Transactions; Correction

AGENCY: Financial Crimes Enforcement Network, Treasury.

ACTION: Correction to final regulations.

SUMMARY: This document contains a correction to the final rule requiring banks to file reports of suspicious transactions under the Bank Secrecy Act, which was published Monday, February 5, 1996 (61 FR 4326).

EFFECTIVE DATE: April 25, 1996.

FOR FURTHER INFORMATION CONTACT: Charles Klingman, Office of Financial Institutions Policy, FinCEN (703) 905–3920; or Joseph M. Myers, Attorney-Advisor, Office of Legal Counsel, FinCEN, at (703) 905–3590.

SUPPLEMENTARY INFORMATION:

Background

The final regulations that are the subject of these corrections require banks and other depository institutions to report to the Department of the Treasury under the Bank Secrecy Act any suspicious transactions relevant to possible violations of federal law or regulation.

Need for Correction

As published, the final regulations contain an error which may prove to be misleading and is in need of clarification.

Correction of Publication

Accordingly, the publication on February 5, 1996 of the final regulations, which were the subject of FR Doc. 96–2272, is corrected as follows:

§ 103.21 [Corrected]

3. On page 4332, in the second column, in § 103.21, paragraph (f), line 7, the word ''shall'' is corrected to read ''may''.

Dated: April 22, 1996.

Anna Fotias,

Alternate Federal Register Liaison Officer, Financial Crimes Enforcement Network.

[FR Doc. 96–10280 Filed 4–24–96; 8:45 am]

BILLING CODE 4820–03–P

31 CFR Part 103

RIN 1506–AA17

Amendment to the Bank Secrecy Act Regulations Relating to Orders for Transmittals of Funds by Financial Institutions; Correction

AGENCY: Financial Crimes Enforcement Network, Treasury.

ACTION: Correction to final regulations.

SUMMARY: This document contains corrections to the final rule amending the Bank Secrecy Act regulations relating to orders for transmittals of funds by financial institutions, which was published Monday, April 1, 1996 (61 FR 14386).

EFFECTIVE DATE: May 28, 1996.

FOR FURTHER INFORMATION CONTACT: Charles D. Klingman, Office of Financial Institutions Policy, at (703) 905–3920, or Joseph M. Myers, Office of Legal Counsel, (703) 905–3590.

SUPPLEMENTARY INFORMATION:

Background

The final regulations that are the subject of these corrections amend the Bank Secrecy Act regulations relating to orders for transmittals of funds by financial institutions.

Need for Correction

As published, the final regulations contain errors which may prove to be misleading and are in need of clarification.

Correction of Publication

Accordingly, the publication on April 1, 1996 of the final regulations, which were the subject of FR Doc. 96–7682, is corrected as follows:

§ 103.33 [Corrected]

1. On page 14388, in the third column, in § 103.33, paragraph (g)(3) introductory text, line 7, the language ''transfer system by a financial institution'' is corrected to read ''transfer system or otherwise by a financial institution''.

2. On page 14388, in the third column, in § 103.33, paragraph (g)(3) introductory text, line 9, the language ''the Federal Reserve Bank completes its'' is corrected to read ''the Federal Reserve Bank or otherwise, completes its''.

Dated: April 22, 1996.

Anna Fotias,

Alternate Federal Register Liaison Officer, Financial Crimes Enforcement Network.

[FR Doc. 96–10279 Filed 4–24–96; 8:45 am]

BILLING CODE 4820–03–P

DEPARTMENT OF TRANSPORTATION

Coast Guard

33 CFR Part 1

[CGD 96–010]

RIN 2115–AF30

Removal of Appendix to 33 CFR Subpart 1.07, List of Penalty Provisions Coast Guard Is Authorized To Enforce

AGENCY: Coast Guard, DOT.

ACTION: Final rule.

SUMMARY: As part of the President's Regulatory Reinvention Initiative, the Coast Guard is removing obsolete regulations. The Appendix to 33 CFR Subpart 1.07 is outdated. To avoid misleading the public with outdated materials, the Coast Guard is removing the Appendix.

EFFECTIVE DATE: April 25, 1996.

ADDRESSES: Unless otherwise indicated, documents referred to in this preamble are available for inspection or copying at the office of the Executive Secretary, Marine Safety Council (G–LRA/3406), U.S. Coast Guard Headquarters, 2100 Second Street SW., room 3406, Washington D.C. 20593–0001 between 8 a.m. and 3 p.m., Monday through Friday, except Federal holidays. The telephone number is (202) 267–1477.

FOR FURTHER INFORMATION CONTACT: LT Michele Bouziane, Staff Attorney, Maritime and International Law Division, Office of Chief Counsel, U.S. Coast Guard Headquarters, (202) 267–0014.

SUPPLEMENTARY INFORMATION:

Background and Purpose

The Appendix to 33 CFR Subpart 1.07 lists penalty provisions of statutes the Coast Guard is authorized to enforce. This includes penalty provisions of laws that the Coast Guard enforces and administers under this part. It also includes penalty provisions of laws that another agency administers, but the Coast Guard enforces when violations occur on the high seas and waters over which the United States has jurisdiction. The Appendix also lists the penalty procedure (civil or criminal) used by the Coast Guard to address violations of each statute.

The Appendix was last updated in 1982. The Appendix, in its outdated condition, is of little use and could be misleading. The Coast Guard does not plan to update the index because the information it contains is available elsewhere in statutes and regulations. To avoid misleading the public with outdated materials, the Coast Guard is removing the Appendix.

Regulatory Information

This rule is being published as a final rule without a prior notice of proposed rulemaking. This rulemaking merely removes the Appendix to 33 CFR Subpart 1.07 and will not impose any substantive requirements on the public. Therefore, the Coast Guard for good cause finds, under 5 U.S.C. 553 (b)(3)(B) and (d)(3), that notice and public comment procedure are unnecessary, and that this rule may be made effective upon publication.

Regulatory Evaluation

This rule is not a significant regulatory action under section 3(f) of Executive Order 12866 and does not require an assessment of potential costs and benefits under section 6(a)(3) of that order. It has not been reviewed by the Office of Management and Budget under that order. It is not significant under the regulatory policies and procedures of the Department of Transportation (DOT) (44 FR 11040; February 26, 1979). The Coast Guard expects the economic impact of this rule to be so minimal that a full Regulatory Evaluation under paragraph 10e of the regulatory policies and procedures of DOT is unnecessary.

Small Entities

Under the Regulatory Flexibility Act (5 U.S.C. 601 *et seq.*), the Coast Guard must consider whether this rule will have a significant economic impact on a substantial number of small entities. ''Small entities'' may include (1) small businesses and not-for-profit organizations that are independently owned and operated and are not dominant in their fields and (2) governmental jurisdictions with populations of less than 50,000. The Coast Guard has evaluated this rule under the Regulatory Flexibility Act. This rule involves removing the Appendix to 33 CFR Subpart 1.07 and will not have a substantive impact on the public. Therefore, the Coast Guard certifies under 5 U.S.C. 605(b) that this rule will not have a significant economic impact on a substantial number of small entities.

Collection of Information

This proposal contains no collection-of-information requirements under the Paperwork Reduction Act (44 U.S.C. 3501 *et seq.*).

Federalism

The Coast Guard has analyzed this rule under the principles and criteria contained in Executive Order 12612 and has determined that this rule does not have sufficient federalism implications to warrant the preparation of a Federalism Assessment.

Environment

The Coast Guard considered the environmental impact of this rule and concluded that, under paragraph 2.B.2 of Commandant Instruction M16475.1B (as revised by 59 FR 38654, July 29, 1994), this rule is categorically excluded from further environmental documentation. A ''Categorical Exclusion Determination'' is available in the docket for inspection or copying where indicated under **ADDRESSES**.

List of Subjects

33 CFR Part 1

Administrative practice and procedure, Authority delegations (Government agencies), Freedom of information, Penalties.

Subpart 1.07 Appendix [Removed]

Under the authority of 14 U.S.C. 633, the Appendix to 33 CFR Subpart 1.07 is removed.

Dated: April 19, 1996.

Paul M. Blayney,

Rear Admiral, U.S. Coast Guard, Chief Counsel.

[FR Doc. 96–10255 Filed 4–24–96; 8:45 am]

BILLING CODE 4910–14–M

ENVIRONMENTAL PROTECTION AGENCY

40 CFR Part 52

[KS–6–1–6985, MO–31–1–7153; FRL 5448–9]

Approval and Promulgation of Implementation Plans; States of Kansas and Missouri

AGENCY: Environmental Protection Agency (EPA).

ACTION: Direct final rule.

SUMMARY: By this action the EPA gives full approval to the State Implementation Plans (SIP) submitted by the states of Kansas and Missouri to fulfill the emission inventory update requirement of the approved Kansas City maintenance plan. The submittals also establish a motor vehicle emissions budget for the purposes of fulfilling the requirements of the Federal Transportation Conformity rule.

DATES: This action will be effective June 24, 1996 unless by May 28, 1996 adverse or critical comments are received.

ADDRESSES: Copies of the documents relevant to this action are available for public inspection during normal business hours at the: Environmental Protection Agency, Air Planning and Development Branch, 726 Minnesota Avenue, Kansas City, Kansas 66101.

FOR FURTHER INFORMATION CONTACT: Lisa V. Haugen at (913) 551–7877.

SUPPLEMENTARY INFORMATION:

I. Background

Based on ambient air quality data for the period 1989 through 1991, the

Kansas and Missouri portions of the Kansas City ozone nonattainment area were redesignated to attainment, and a maintenance plan was approved, in a June 23, 1992, Federal Register notice. In the approved maintenance plan, each state committed to completing comprehensive volatile organic compound (VOC) point source inventory updates at least twice in each five-year period following the effective date of the area's redesignation. Area and mobile source inventories are to be updated at least once every five years. These periodic updates are part of each state's continued efforts to ascertain whether actual VOC emissions are within the attainment inventory.

The 1992 approved maintenance SIP was submitted before EPA finalized its maintenance plan guidance which provided that nitrogen oxide (NO_X) emissions inventories be included in maintenance demonstrations. However, during the course of EPA review of the submittal, EPA made an assessment of NO_X emissions in Kansas City. These emission inventory updates supersede the NO_X inventory information for the period 1990 through 2000 developed by EPA during the review and approval of the 1992 maintenance plan.

On November 23, 1993, pursuant to section 176(c) of the Clean Air Act, the EPA promulgated the final rule (hereafter referred to as the Transportation Conformity rule), which established the process by which the Federal Highway Administration, the Federal Transit Administration, and metropolitan planning organizations (MPO) determine conformity of highway and transit projects. This rule applies to Kansas City as an ozone maintenance area.

The emissions budget is the mechanism EPA has identified for demonstrating consistency between emissions expected from implementation of transportation plans, Transportation Improvement Programs (TIP), and projects with estimates of emissions in the SIP from on-road motor vehicles. Motor vehicle emissions budgets are the explicit or implicit identification of the on-road motor vehicle-related portion of the projected emission inventory used to demonstrate maintenance of the National Ambient Air Quality Standard for ozone for a particular year specified in the SIP. The motor vehicle emissions budget establishes a cap on the predicted highway and transit vehicle VOC and NO_X emissions which, if exceeded, will result in a nonconformity finding.

The maintenance plan for the Kansas City area was approved before the promulgation of the Transportation Conformity rule, and therefore did not include explicit motor vehicle emission budgets for VOCs and NO_X. These SIP revisions amend the 1992 Kansas City ozone maintenance SIP to specify motor vehicle VOC and NO_x emissions budgets for the Kansas City air quality maintenance area.

II. Review of State Submittal

A comprehensive emissions inventory for both VOCs and NO_X , which includes an explicit motor vehicle emissions budget, was submitted by the state of Kansas on May 11, 1995, and by the state of Missouri on April 12, 1995. These emissions inventory updates were completed for the Kansas City ozone maintenance area, which includes Wyandotte and Johnson counties in Kansas and Clay, Jackson, and Platte counties in Missouri. With the exception of point sources and the asphalt paving source category, all other emissions estimates were calculated with 1990 as the base year, and projections were made from the base to 2010.

Air quality monitoring data, which have recently been quality-assured, indicate that measured exceedances of the ozone standard were recorded on July 11, 12, and 13, 1995, at the Liberty monitoring site in Kansas City. The highest recorded value for each day was .128 ppm, .161 ppm, and .131 ppm, respectively. These exceedances, added to a measured exceedance of the ozone standard of .128 ppm, recorded on July 29, 1993, puts the area in violation of the standard.

As required in the approved maintenance plan, contingency measures must be implemented to address the violation of the ozone standard. The approved maintenance plan also includes a commitment by the states to complete a comprehensive VOC emission inventory should a violation of the ozone standard occur. EPA has determined that the emission inventory updates submitted by the states of Kansas and Missouri fulfill the aforementioned commitment. However, if the Kansas City area experiences further violations of the ozone standard, the emission inventory will need to be revised.

A. VOC and NO_X Emissions Inventory Updates

Part 3.2 and Appendices A, B, and C of the 1992 maintenance SIP contain VOC emissions inventory estimates from point, area, and mobile sources for the period 1988 through 2000. These SIP revisions update and supersede the VOC emissions inventory in its entirety for the period between 1990 and 2000. This revision also supplements Part 3.2 with VOC emissions inventory projections for 2005 and 2010 in order to address the requirements of the Transportation Conformity rule. The NO_X emissions inventories supplement the 1992 maintenance SIP with detailed NO_X emissions estimates for the period 1990 through 2000 and for the years 2005 and 2010.

The new emission inventory numbers reflect significant changes in emissions estimation methodology and changes in the data upon which estimates are based. The reader is referred to the Technical Support Document and the states' submittals for detailed information about methodologies, emission factors, sources of input data, the basis for projections, seasonal adjustments, conversions, and assumptions. The 1990 VOC inventory includes reductions attributable to Reid Vapor Pressure control from 9.5 to 9.0 psi consistent with the 1992 Maintenance SIP.

Part 3.4 of the 1992 maintenance SIP specifically defined an ''action line'' that represented the maximum allowable VOC emissions in the Kansas City metropolitan air quality planning area. The revised 1990 VOC emissions inventories replace the ''action line'' as the number that represents the maximum allowable VOC emissions in the Kansas City air quality planning area.

The VOC emissions inventories for the Kansas City ozone maintenance area are presented in the following tables:

VOC EMISSIONS SUMMARY—ALL COUNTIES

[Unless otherwise specified, the units of measurement are in kilograms per summer day]

	On-road mobile emissions	Off-road mobile emissions	Biogenic emissions	Area source emissions	Point source emissions	Total emissions
1990	128282.53	39575.47	35821.05	86593.21	32284.52	322556.77

VOC EMISSIONS SUMMARY—ALL COUNTIES—Continued

[Unless otherwise specified, the units of measurement are in kilograms per summer day]

	On-road mobile emissions	Off-road mobile emissions	Biogenic emissions	Area source emissions	Point source emissions	Total emissions
1992	96710.10	39857.92	35821.05	86156.15	27733.27	286278.50
1995	87355.63	41221.27	35821.05	89484.05	30007.33	283889.33
2000	81815.02	43085.96	35821.05	94974.59	32346.91	288043.53
2005	73897.25	45135.34	35821.05	100297.17	34977.68	290128.48
2010	77151.71	47053.42	35821.05	105007.73	37529.13	302563.04

VOC EMISSIONS SUMMARY—MISSOURI COUNTIES (JACKSON, CLAY, PLATTE COUNTIES)

[Unless otherwise specified, the units of measurement are in kilograms per summer day]

	On-road mobile emissions	Off-road mobile emissions	Biogenic emissions	Area source emissions	Point source emissions	Total emissions
1990	81506.45	26222.22	22926.35	51480.28	21283.17	203418.47
1992	61373.89	26399.32	22926.35	51044.25	18621.05	180364.86
1995	55461.41	27237.63	22926.35	52808.29	20138.78	178572.46
2000	50495.69	28368.05	22926.35	55569.59	21708.13	179067.80
2005	45604.20	29684.52	22926.35	58481.09	23474.30	180170.47
2010	46641.63	30917.71	22926.35	60941.80	25162.72	186590.21

VOC EMISSIONS SUMMARY—KANSAS COUNTIES (WYANDOTTE AND JOHNSON)

[Unless otherwise specified, the units of measurement are in kilograms per summer day]

	On-road mobile emissions	Off-road mobile emissions	Biogenic emissions	Area source emissions	Point source emissions	Total emissions
1990	46776.08	13353.25	12894.70	35112.93	11001.34	119138.30
1992	35336.21	13458.59	12894.70	35111.91	9112.22	105913.64
1995	31894.22	13983.65	12894.70	36675.76	9868.55	105316.87
2000	31319.33	14717.91	12894.70	39405.01	10638.78	108975.73
2005	28293.04	15450.81	12894.70	41816.08	11503.38	109958.01
2010	30510.08	16135.71	12894.70	44065.93	12366.41	115972.83

The NO_X emissions inventories for the Kansas City ozone maintenance area are presented in the following tables:

NO_X EMISSIONS SUMMARY—ALL COUNTIES

[Unless otherwise specified, the units of measurement are in kilograms per summer day]

	On-road mobile emissions	Off-road mobile emissions	Biogenic emissions	Area source emissions	Point source emissions	Total emissions
1990	103895.82	43860.30	0.00	15830.39	161550.89	325137.39
1992	102580.57	43182.37	0.00	15669.14	173748.93	335181.02
1995	101275.32	45812.23	0.00	16966.07	152629.66	316683.27
2000	98337.95	44300.25	0.00	18565.52	104439.12	265642.84
2005	95408.56	41857.70	0.00	20378.20	105334.55	262979.01
2010	98570.22	40375.29	0.00	21707.60	106156.52	266809.64

NO_X EMISSIONS SUMMARY—MISSOURI COUNTIES (JACKSON, CLAY, PLATTE COUNTIES)

[Unless otherwise specified, the units of measurement are in kilograms per summer day]

	On-road mobile emissions	Off-road mobile emissions	Biogenic emissions	Area source emissions	Point source emissions	Total emissions
1990	66147.65	22398.17	0.00	4104.73	103125.99	195776.54
1992	65329.61	21998.33	0.00	4115.09	111842.06	203285.09
1995	64459.65	23655.85	0.00	4412.00	99474.58	192002.08
2000	60876.51	22757.27	0.00	4808.15	76461.04	164902.96
2005	59067.93	21277.86	0.00	5254.93	76772.77	162373.50
2010	60275.27	20396.86	0.00	5576.43	77030.49	163279.04

NO_X EMISSIONS SUMMARY—KANSAS COUNTIES (WYANDOTTE AND JOHNSON)

[Unless otherwise specified, the units of measurement are in kilograms per summer day]

	On-road mobile emissions	Off-road mobile emissions	Biogenic emissions	Area source emissions	Point source emissions	Total emissions
1990	37748.17	21462.13	0.00	11725.66	58424.89	129360.85
1992	37250.96	21184.05	0.00	11554.05	61906.87	131895.93
1995	36815.67	22156.38	0.00	12554.07	53155.08	124681.20
2000	37461.44	21542.98	0.00	13757.38	27978.08	100739.88
2005	36340.63	20579.84	0.00	15123.27	28561.78	100605.51
2010	38294.96	19978.43	0.00	16131.17	29126.03	103530.60

B. Motor Vehicle Emissions Budgets

These emission inventory updates define a VOC motor vehicle emissions budget and an NO_X motor vehicle emissions budget. The emissions inventories in the Kansas and Missouri maintenance SIPs are combined to establish these budgets to be used in determining conformity of regional transportation plans and TIPs. Combined budgets are preferable for determining conformity in bistate air quality regions with a single MPO when emissions inventories are projected to remain consistent with maintenance of the ozone standard.

Estimates of total VOC and NO_X emissions in future years in the maintenance area are less than required to demonstrate maintenance of the ozone standard. In these circumstances, the Transportation Conformity rule permits the SIP to explicitly quantify the difference as a margin and include a portion of the margin in the motor vehicle emissions budget. These SIP revisions explicitly quantify the margin and explicitly assign a portion of the margin to the motor vehicle VOC and NO_X emissions budgets for conformity purposes.

Section 51.404 of the Transportation Conformity rule requires that regional transportation plans establish ''horizon years'' which envision a transportation system for certain future years, not more than 10 years apart. These SIP revisions define the horizon years for the Kansas City maintenance area to be 2000 and 2010. The motor vehicle VOC and NO_X emissions budgets for these years are above the motor vehicle emissions inventory estimates for 2000 and 2010. This approach is designed to protect emissions growth throughout the entire maintenance period to the year 2010. The reader is referred to the states' submissions for the calculations used to determine the motor vehicle emissions budgets.

The regional motor vehicle VOC and NO_X emissions budgets, based on combining the inventories for the Missouri and Kansas portions of the air quality maintenance area, are as follows:

Ozone precursor	Regional motor vehicle budget for the year 2000	Regional motor vehicle budget for the year 2010
Non-Methane Hydro-carbons.	87548 kg/summer day.	82885 kg/summer day.
Nitrogen Ox-ides.	119889 kg/summer day.	120121 kg/summer day.

The motor vehicle emissions budgets were the subject of the interagency consultation process as required by § 51.402 of the Transportation Conformity rule. The draft emissions inventories and motor vehicle emissions budgets were reviewed by a regional air quality policy advisory committee formed under the provisions of § 174 of the Clean Air Act and the regional transportation policy committee, constituted in accordance with the Intermodal Surface Transportation Efficiency Act. They were published and made available for regional public review and comment.

The Missouri portion of the emissions inventory update and motor vehicle emissions budget was adopted by the Missouri Air Conservation Commission, after proper notice and public hearing, on March 30, 1995. A public hearing for the Kansas portion of the emissions inventory update and motor vehicle emissions budget was held on May 8, 1995, and adopted by the Secretary of Health and Environment on May 11, 1995.

Missouri and Kansas have submitted complete inventories containing point, area, biogenic, on-road, and nonroad mobile source data and accompanying documentation. The submittals provide adequate documentation on the emission estimation procedures and the data sources used to develop the inventory. The point and area source inventories are complete. Emissions for each source category were prepared or calculated according to the most current EPA guidance. The VMT development methods are adequately described and documented, and the most current EPA MOBILE model was correctly used to produce emission factors for each of the vehicle classes. Therefore, the submitted emission inventory updates meet current EPA guidance for the development of an approvable emissions inventory. EPA ACTION: By this action EPA grants full approval of the May 11, 1995, Kansas submittal and the April 12, 1995, submittal from the state of Missouri. These SIP revisions meet all of the requirements for an approvable emissions inventory update.

The EPA is publishing this action without prior proposal because the Agency views this as a noncontroversial amendment and anticipates no adverse comments. However, in a separate document in the Federal Register publication, the EPA is proposing to approve the SIP revision should adverse or critical comments be filed.

If the EPA receives such comments, this action will be withdrawn before the effective date by publishing a subsequent notice that will withdraw the final action. All public comments received will then be addressed in a subsequent final rule based on this action serving as a proposed rule. The EPA will not institute a second comment period on this action. Any parties interested in commenting on this action should do so at this time.

Nothing in this action should be construed as permitting or allowing or establishing a precedent for any future request for revision to any SIP. Each request for revision to the SIP shall be considered separately in light of specific technical, economic, and environmental factors, and in relation to relevant statutory and regulatory requirements.

Under the Regulatory Flexibility Act, 5 U.S.C. 600 *et. seq.*, EPA must prepare a regulatory flexibility analysis assessing the impact of any proposed or final rule on small entities (5 U.S.C. §§ 603 and 604). Alternatively, EPA may certify that the rule will not have a significant impact on a substantial number of small entities. Small entities

include small businesses, small not-for-profit enterprises, and government entities with jurisdiction over populations of less than 50,000.

SIP approvals under section 110 and subchapter I, Part D of the CAA do not create any new requirements, but simply approve requirements that the state is already imposing. Therefore, because the Federal SIP approval does not impose any new requirements, EPA certifies that it does not have a significant impact on any small entities affected. Moreover, due to the nature of the Federal-state relationship under the CAA, preparation of a regulatory flexibility analysis would constitute Federal inquiry into the economic reasonableness of state action. The CAA forbids EPA to base its actions concerning SIPs on such grounds (*Union Electric Co.* v. *U.S. E.P.A.*, 427 U.S. 246, 256–66 (S.Ct. 1976); 42 U.S.C. 7410(a)(2)).

This action has been classified as a Table 3 action for signature by the Regional Administrator under the procedures published in the Federal Register on January 19, 1989 (54 FR 2214–2225), as revised by a July 10, 1995, memorandum from Mary Nichols, Assistant Administrator for Air and Radiation. The Office of Management and Budget (OMB) has exempted this regulatory action from E.O. 12866 review.

Under sections 202, 203, and 205 of the Unfunded Mandates Reform Act of 1995 (''Unfunded Mandates Act''), signed into law on March 22, 1995, EPA must undertake various actions in association with proposed or final rules that include a Federal mandate that may result in estimated costs of $100 million or more to the private sector, or to state, local, or tribal governments in the aggregate.

Through submission of this SIP, the state has elected to adopt the program provided for under section 110 of the CAA. These rules may bind state and local governments to perform certain actions and also require the private sector to perform certain duties. To the extent that the rules being finalized for approval by this action will impose new requirements, sources are already subject to these regulations under state law. Accordingly, no additional costs to state or local governments, or to the private sector, result from this final action. EPA has also determined that this final action does not include a mandate that may result in estimated costs of $100 million or more to state or local governments in the aggregate or to the private sector. EPA has determined that these rules result in no additional costs to tribal government.

Under section 307(b)(1) of the CAA, petitions for judicial review of this action must be filed in the United States Court of Appeals for the appropriate circuit by June 24, 1996. Filing a petition for reconsideration by the Administrator of this final rule does not affect the finality of this rule for the purposes of judicial review, nor does it extend the time within which a petition for judicial review may be filed, and shall not postpone the effectiveness of such rule or action. This action may not be challenged later in proceedings to enforce its requirements. (See section 307(b)(2).)

List of Subjects in 40 CFR Part 52

Environmental protection, Air pollution control, Hydrocarbons, Incorporation by reference, Intergovernmental relations, Ozone, Reporting and recordkeeping requirements, Volatile organic compounds.

Dated: February 9, 1996.

Dennis Grams,

Regional Administrator.

Part 52, chapter I, title 40 of the Code of Federal Regulations is amended as follows:

PART 52—[AMENDED]

1. The authority citation for part 52 continues to read as follows:

Authority: 42 U.S.C. 7401–7671q.

Subpart R—Kansas

2. Section 52.870 is amended by adding paragraph (c)(31) to read as follows:

§ 52.870 Identification of plan.

* * * * *

(c) * * *

(31) On May 11, 1995, the Kansas Department of Health and Environment submitted an emissions inventory update to the Kansas City maintenance plan approved by EPA on June 23, 1992. The submittal also establishes a motor vehicle emissions budget for the purpose of fulfilling the requirements of the Federal Transportation Conformity rule.

(i) Incorporation by reference.

(A) Kansas City Ozone Maintenance State Implementation Plan Revision: Emissions Inventories and Motor Vehicle Emissions Budgets for the Kansas City Metropolitan Area, adopted on May 11, 1995.

Subpart AA—Missouri

3. Section 52.1320 is amended by adding paragraph (c)(94) to read as follows:

§ 52.1320 Identification of plan.

* * * * *

(c) * * *

(94) On April 12, 1995, the Missouri Department of Natural Resources submitted an emissions inventory update to the Kansas City maintenance plan approved by EPA on June 23, 1992. The submittal also establishes a motor vehicle emissions budget for the purpose of fulfilling the requirements of the Federal Transportation Conformity rule.

(i) Incorporation by reference.

(A) Kansas City Ozone Maintenance SIP Revisions: Emission Inventories and Motor Vehicle Emissions Budgets, adopted by the Missouri Air Conservation Commission on March 30, 1995.

[FR Doc. 96–10132 Filed 4–24–96; 8:45 am]

BILLING CODE 6560–50–P

---

40 CFR Part 52

[OH21–2–7260; FRL–5450–5]

Approval and Promulgation of Implementation Plans; Ohio

AGENCY: United States Environmental Protection Agency (USEPA).

ACTION: Final rule.

SUMMARY: Pursuant to letter notice procedures described at 54 FR 2214 (January 19, 1989), USEPA approved minor revisions to the Ohio State Implementation Plan (SIP) on October 31, 1995. This document describes the approved revisions and incorporates the relevant material into the Code of Federal Regulations. The SIP revisions are site-specific rules that are required as part of an effort to achieve the National Ambient Air Quality Standard (NAAQS) for ozone. The rules will benefit the environment and people who have asthma and other respiratory diseases by reducing volatile organic compound (VOC) emissions, a precursor to smog formation.

EFFECTIVE DATE: The effective date is April 25, 1996.

ADDRESSES: Copies of the State SIP revision request and USEPA's letter notice of approval are available for public inspection during normal business hours at the following locations:

United States Environmental Protection Agency, Region 5, Air and Radiation Division, 77 West Jackson Boulevard (AR–18J), Chicago, Illinois 60604; and

Office of Air and Radiation Docket and Information Center (Air Docket 6102), United States Environmental Protection Agency, 401 M Street, SW, Washington, DC, 20460.

FOR FURTHER INFORMATION CONTACT: Fayette Bright, Regulation Development Section, Air Programs Branch (AR–18J), U.S. Environmental Protection Agency, Region 5, Chicago, Illinois 60604, (312) 886–6069.

SUPPLEMENTARY INFORMATION: The Ohio Environmental Protection Agency (OEPA) originally submitted a SIP revision request on June 7, 1993, which established VOC reasonably available control technology (RACT) requirements for the facilities not covered by a control technique guideline (CTG). VOC RACT requirements were established for the following non-CTG sources [1]:

AK Steel Corporation (Armco Steel Company)
B.F. Goodrich Company—Akron Chemical Plant
Chevron U.S.A. Incorporated
Cincinnati Specialties Incorporated
Day-Glo Color Corporation
Firestone Synthetic Rubber and Latex Company
Formica Corporation
Goodyear Tire and Rubber Company—Akron Polymer
Goodyear Tire and Rubber Company—Plant C
International Paper Company
Lubrizol Corporation
Midwest Mica and Insulation Company
Morton International Incorporated
PPG Industries Incorporated
Reilly Industries Incorporated
Ritrama Duramark
Sprayon Products Incorporated
Steelcraft Manufacturing Company
Zeneca (ICI Americas, Perry)

USEPA considered the State's request a minor SIP revision request. In response to USEPA comments on the request, the State submitted revisions to the original submittal on February 17, 1995, and August 22, 1995. The first revision submitted by the State included revised rules and permit requirements (implemented through Findings and Orders issued to the facilities) for a number of the facilities which established site-specific non-CTG VOC RACT regulations. The first revision did not, however, establish requirements for all of the non-CTG facilities and some of the revised rules contained deficiencies. Therefore, the State submmitted a second revision on August 22, 1995, correcting these deficiencies and establishing requirements for the remaining non-CTG facilities.

On October 31, 1995, USEPA approved the SIP revision requests under Section 110(k) of the Clean Air Act (CAA) by notifying the affected facilities and the OEPA by letter that USEPA was approving the SIP revisions.[2] The SIP revisions became final and effective on that date. USEPA has determined that these SIP revisions satisfy requirements for RACT for the non-CTG facilities and comply with all other applicable requirements of the CAA and USEPA policy and regulations concerning such revisions.

The October 31, 1995, letter notice approvals, in conjunction with rule approvals published in the Federal Register on March 23, 1995 (60 FR 15235), correct all VOC RACT deficiencies cited in the action published May 9, 1994 (59 FR 23796). In the May 9, 1994, rulemaking action and the September 23, 1993, proposed rulemaking action (58 FR 49458), the rule deficiencies are described. The March 23, 1995, rulemaking describes how the deficiencies are remedied. The deficiencies for Canton, Youngstown, Toledo, and Dayton and some of the deficiencies for Cleveland and Cincinnati were found to be remedied when USEPA took final rulemaking action approving revisions to VOC RACT regulations for those areas. (See 60 FR 15235, March 23, 1995).

Clocks imposing sanctions on Canton, Youngstown, Toledo, Dayton, Cleveland, and Cincinnati were started as a result of the May 9, 1994, rulemaking action on VOC RACT described above. In order to stop the clocks, Ohio had to correct the VOC RACT deficiencies and have them approved into the SIP by USEPA November 9, 1995. The rule approvals published March 23, 1995, stopped the sanctions clocks for Canton, Youngstown, Toledo, and Dayton. The same March 23, 1995, rule approval corrected a number of the rule deficiencies for the Cleveland and Cincinnati areas. The remaining deficiencies were corrected by the October 31, 1995, letter notices and stopped the VOC RACT sanctions clocks for those areas.

Nothing in this action should be construed as permitting, allowing or establishing a precedent for any future request for revision to any SIP. USEPA shall consider each request for revision to the SIP in light of specific technical, economic, and environmental factors and in relation to relevant statutory and regulatory requirements.

This action has been classified as a Table 3 action for signature by the Regional Administrator under the procedures published in the Federal Register on January 19, 1989 (54 FR 2214–2225), as revised by a July 10, 1995, memorandum from Mary Nichols, Assistant Administrator for Air and Radiation. The Office of Management and Budget (OMB) has exempted this regulatory action from Executive Order 12866 review.

Under the Regulatory Flexibility Act, 5 U.S.C. 600 *et seq.*, USEPA must prepare a regulatory flexibility analysis assessing the impact of any proposed or final rule on small entities. (5 U.S.C. 603 and 604.) Alternatively, USEPA may certify that the rule will not have a significant impact on a substantial number of small entities. Small entities include small businesses, small not-for-profit enterprises, and government entities with jurisdiction over populations of less than 50,000.

SIP approvals under section 110 and subchapter I, Part D of the Act do not create any new requirements, but simply approve requirements that the State is already imposing. Therefore, because the federal SIP approval does not impose any new requirements, I certify that it does not have a significant impact on any small entities affected. Moreover, due to the nature of the Federal-State relationship under the Act, preparation of a regulatory flexibility analysis would constitute federal inquiry into the economic reasonableness of state action. The Act forbids USEPA to base its actions concerning SIPs on such grounds. *Union Electric Co.* v. *USEPA*, 427 U.S. 246, 256–66 (S.Ct. 1976); 42 U.S.C. 7410(a)(2).

Under Sections 202, 203, and 205 of the Unfunded Mandates Reform Act of 1995, signed into law on March 22, 1995, USEPA must undertake various actions in association with proposed or final rules that include a Federal mandate that may result in estimated costs of $100 million or more to the private sector, or to State, local, or tribal governments in the aggregate.

Through submission of the state implementation plan or plan revisions approved in this action, the State has elected to adopt the program provided for under section 110 of the Clean Air Act. The rules and commitments being approved in this action may bind State,

[1] The USEPA issued three sets of control technique guidelines documents which established a ''presumptive norm'' for RACT for various categories of VOC sources. Sources not covered by a CTG were called non-CTG sources.

[2] Notice of the proposed approval of these SIP revisions was published in the Federal Register on July 10, 1995. Due to the minor nature of these revisions, USEPA concluded that conducting the usual notice-and-comment rulemaking prior to approving the revisions would have been ''unnecessary and contrary to public interest,'' and therefore was not required by the Administrative Procedure Act, 5 U.S.C. Section 553(b). USEPA therefore sent notice of the approval by letter to the affected facilities and the OEPA in accordance with the procedure described in a January 30, 1989, memorandum from USEPA's Office of Air Quality Planning and Standards to the Regional Air Division Directors entitled ''Procedures for Letter Notice Approval of Minor SIP Actions.''

local and tribal governments to perform certain actions and also may ultimately lead to the private sector being required to perform certain duties. To the extent that the rules and commitments being approved by this action will impose or lead to the imposition of any mandate upon the State, local or tribal governments either as the owner or operator of a source or as a regulator, or would impose or lead to the imposition of any mandate upon the private sector, EPA's action will impose no new requirements; such sources are already subject to these requirements under State law. Accordingly, no additional costs to State, local, or tribal governments, or to the private sector, result from this action. The USEPA has also determined that this action does not include a mandate that may result in estimated costs of $100 million or more to State, local, or tribal governments in the aggregate or to the private sector.

Under Section 307(b)(1) of the Act, as amended, judicial review of this action is available only by filing a petition for review in the United States Court of Appeals for the appropriate circuit by June 24, 1996. The action may not be challenged later in proceedings to enforce their requirements. See section 307(b)(2).

List of Subjects in 40 CFR Part 52

Environmental protection, Air pollution control, Incorporation by reference, Intergovernmental relations, Ozone, Reporting and recordkeeping requirements, Volatile organic compounds.

Dated: February 29, 1996.

Valdas V. Adamkus,

Regional Administrator.

Part 52, chapter I, title 40, of the Code of Federal Regulations is amended to read as follows:

PART 52—[AMENDED]

1. The authority citation for part 52 continues to read as follows:

Authority: 42 U.S.C. 7401–7671q.

Subpart KK—Ohio

2. Section 52.1870 is amended by adding paragraph (c)(102) to read as follows:

§ 52.1870 Identification of plan.

* * * * *

(c) * * *

(102) On June 7, 1993, and February 17, 1995, the Ohio Environmental Protection Agency (OEPA) submitted revisions to the State Implementation Plan (SIP) for ozone. The revisions include 19 new non-Control Technique Guideline volatile organic compound (VOC) rules, Findings and Orders for 5 companies, and two permits to install.

(i) Incorporation by reference.

(A) OEPA OAC Rule 3745–21–01, Definitions, Paragraphs (Q); (T); effective January 17, 1995.

(B) OEPA OAC Rule 3745–21–04, Attainment Dates and Compliance Time Schedules, Paragraphs (C)(40); (C)(41); (C)(46); (C)(48); (C)(49); (C)(50); (C)(51); (C)(53); (C)(54); (C)(59); (C)(60); (C)(61); (C)(62); effective January 17, 1995.

(C) OEPA OAC Rule 3745–21–09, Control of Emissions of Volatile Organic Compounds from Stationary Sources, Paragraphs (FF), (GG), (HH), (II), (JJ), (KK), (LL), (MM), (NN), (OO), (PP), (QQ), (SS), (TT), (YY), (ZZ), (AAA); (BBB); effective January 17, 1995.

(D) Director's Final Findings and Orders for AK Steel Corporation (Middletown), International Paper Company (Cincinnati), Midwest Mica & Insulation Company (Cleveland), Reilly Industries, Inc. (Cleveland), and Sprayon Products, Inc. (Bedford Heights), Issued by Ohio Environmental Protection Agency on August 18, 1995.

(E) Permit to Install, Application Number 13–2396, for Excello Specialty Company, APS Premise Number 1318607686. The date of issuance is December 11, 1991.

(F) Permit to Install, Application Number 14–2096, for Hilton Davis Company, APS Premise Number 1431070039. The date of issuance is June 12, 1991.

* * * * *

[FR Doc. 96–10131 Filed 4–24–96; 8:45 am]

BILLING CODE 6560–50–P

---

40 CFR Part 52

[WI68–01–7294a; FRL–5461–7]

Approval and Promulgation of State Implementation Plan; Wisconsin; Industrial Adhesives SIP Revision

AGENCY: Environmental Protection Agency (EPA).

ACTION: Direct final rule.

SUMMARY: The EPA approves a revision to the Wisconsin State Implementation Plan (SIP) for ozone that was submitted on December 12, 1995, and later supplemented on January 12, 1996. This revision requires the control of volatile organic compound (VOC) emissions from facilities that utilize industrial adhesives. This submittal was made to satisfy the requirement of the 1990 Clean Air Act (CAA) that all major VOC sources in moderate, or worse, ozone nonattainment areas have Reasonably Available Control Technology (RACT) applied to them. This regulation will also be used to generate reductions in VOC emissions, which the State will use to fulfill the CAA requirement to reduce VOC emissions by at least 15 percent from the 1990 baseline emissions. In the proposed rules section of this Federal Register, the EPA is proposing approval of, and soliciting comments on, this requested SIP revision. If adverse comments are received on this action, the EPA will withdraw this final rule and address the comments received in response to this action in a final rule on the related proposed rule, which is being published in the proposed rules section of this Federal Register. A second public comment period will not be held. Parties interested in commenting on this action should do so at this time. This approval makes federally enforceable the State's rule that has been incorporated by reference.

DATES: The ''direct final'' is effective on June 24, 1996, unless EPA receives adverse or critical comments by May 28, 1996. If the effective date is delayed, timely notice will be published in the Federal Register.

ADDRESSES: Written comments should be sent to: Carlton T. Nash, Chief, Regulation Development Section, Air Programs Branch (AR–18J), U.S. EPA, 77 West Jackson Boulevard, Chicago, Illinois 60604.

Copies of the proposed SIP revision and EPA's analysis are available for inspection at the U.S. EPA, Region 5, Air and Radiation Division, 77 West Jackson Boulevard, Chicago, Illinois 60604. (Please telephone Douglas Aburano at (312) 353–6960 before visiting the Region 5 Office.)

FOR FURTHER INFORMATION CONTACT: Douglas Aburano, Environmental Engineer, Regulation Development Section, Air Programs Branch (AR–18J), U.S. EPA , Region 5, Chicago, Illinois 60604, (312) 353–6960.

SUPPLEMENTARY INFORMATION:

I. Background

Section 182(b) of the CAA sets forth the requirements for ozone nonattainment areas which have been classified as moderate or above. Section 182(b)(1)(A) requires those States with ozone nonattainment areas classified as moderate or above to submit plans to reduce VOC emissions by at least 15 percent from the 1990 baseline emissions. The 1990 baseline, as described by EPA's emission inventory guidance, is the amount of anthropogenic VOC emissions emitted on a typical summer day.

Section 182(b)(2) of the CAA requires States to adopt RACT rules for all areas designated nonattainment for ozone and classified as moderate or above for both sources covered by Control Technology Guidance (CTG) documents issued by EPA and all major sources not covered by a CTG document. The EPA has not issued a CTG document for this source category.

To fulfill the RACT requirement, and as a part of its 15 percent plan, the State of Wisconsin has developed and adopted a rule to reduce the VOC emissions from the use of industrial adhesives operations in those areas of the State that are classified as moderate or higher. These areas are the counties of Kenosha, Kewaunee, Manitowoc, Milwaukee, Ozaukee, Racine, Sheboygan, Washington, and Waukesha.

II. Evaluation of State Submittal

On November 15, 1993, the State of Wisconsin submitted its proposed 15 percent plan. The 15 percent plan submittal was followed by several submittals that contain regulations that will achieve the reductions required by the 15 percent plan. On December 12, 1995, Wisconsin submitted its industrial adhesives rule, which was later supplemented on January 12, 1996, as part of its 15 percent plan. The industrial adhesives portion of the 15 percent plan was found complete in a letter to Don Theiler, Director of the Wisconsin Department of Natural Resources' (WDNR) Bureau of Air Management, dated February 7, 1996. The WDNR followed the required legal procedures for adopting this rule that are the prerequisites for EPA to consider in approving this rule as part of Wisconsin's federally enforceable SIP. The WDNR held two public hearings for this rule on February 1, 1995 and submitted this rule to the EPA as a SIP revision under signature of the Governor's designee.

In developing the control requirements for this source category, WDNR developed the rule with input from affected facilities, adhesive suppliers, small business organizations and other state agencies. Wisconsin's rule, NR 422.127, reduces the VOC emissions from the affected sources by limiting the VOC content of the adhesives used or by requiring a minimum solids contents in the adhesives used.

In addition to recordkeeping requirements that apply generally to VOC sources, facilities that are affected by the coating limits found in this rule must keep records of the following:

1. A unique name of identification number for each adhesive and adhesive primer used.

2. The VOC content of each adhesive and adhesive primer, as applied, in units of kilograms per liter (pounds per gallon), excluding water.

3. The percent solids by weight in each adhesive or adhesive primer, as applied.

Other facilities that are not affected by the limits of this rule due to low-use exemptions must keep records indicating that the exemption threshold is not breached. If a facility goes above the exemption threshold, it must comply with the limits of this rule.

A more detailed analysis of the State's submittal is contained in a technical support document, which is available at the Regional Office listed above. In determining the approvability of this VOC rule, EPA evaluated the rule for consistency with Federal requirements, including section 110 and part D of the Clean Air Act.

III. Final Rulemaking Action

The EPA approves Wisconsin's industrial adhesives rule as being RACT for this source category thereby making this rule federally enforceable.

Because EPA considers this action noncontroversial and routine, we are approving it without prior proposal. This action will become effective on June 24, 1996. However, if we receive adverse comments by May 28, 1996, EPA will publish a document that withdraws this action.

IV. Miscellaneous

A. Applicability to Future SIP Decisions

Nothing in this action should be construed as permitting, allowing or establishing a precedent for any future request for revision to any SIP. The EPA shall consider each request for revision to the SIP in light of specific technical, economic, and environmental factors and in relation to relevant statutory and regulatory requirements.

B. Executive Order 12866

This action has been classified as a Table 3 action for signature by the Regional Administrator under the procedures published in the Federal Register on January 19, 1989 (54 FR 2214), as revised by a July 10, 1995 memorandum from Mary Nichols, Assistant Administrator for Air and Radiation. The Office of Management and Budget has exempted this regulatory action from E.O. 12866 review.

C. Regulatory Flexibility

Under the Regulatory Flexibility Act, 5 U.S.C. 600 *et seq.*, EPA must prepare a regulatory flexibility analysis assessing the impact of any proposed or final rule on small entities (5 U.S.C. 603 and 604). Alternatively, EPA may certify that the rule will not have a significant impact on a substantial number of small entities. Small entities include small businesses, small not for-profit enterprises, and government entities with jurisdiction over populations of less than 50,000.

This approval does not create any new requirements. Therefore, I certify that this action does not have a significant impact on any small entities affected. Moreover, due to the nature of the Federal-State relationship under the Act, preparation of the regulatory flexibility analysis would constitute Federal inquiry into the economic reasonableness of the State action. The Act forbids EPA to base its actions concerning SIPs on such grounds. *Union Electric Co.* v. *U.S. EPA*, 427 U.S. 246, 256–66 (1976).

D. Unfunded Mandates

Under Section 202 of the Unfunded Mandates Reform Act of 1995 (''Unfunded Mandates Act''), signed into law on March 22, 1995, the EPA must prepare a budgetary impact statement to accompany any proposed or final rule that includes a Federal mandate that may result in estimated costs to State, local, or tribal governments in the aggregate; or to the private sector, of $100 million or more. Under Section 205, the EPA must select the most cost-effective and least burdensome alternative that achieves the objectives of the rule and is consistent with statutory requirements. Section 203 requires the EPA to establish a plan for informing and advising any small governments that may be significantly or uniquely impacted by the rule.

The EPA has determined that the approval action promulgated today does not include a Federal mandate that may result in estimated costs of $100 million or more to either State, local, or tribal governments in the aggregate, or to the private sector.

This Federal action approves pre-existing requirements under State or local law, and imposes no new Federal requirements. Accordingly, no additional costs to State, local, or tribal governments, or the private sector, result from this action.

E. Petitions for Judicial Review

Under Section 307(b)(1) of the Act, petitions for judicial review of this

action must be filed in the United States Court of Appeals for the appropriate circuit by June 24, 1996. Filing a petition for reconsideration by the Administrator of this final rule does not affect the finality of this rule for the purposes of judicial review, nor does it extend the time within which a petition for judicial review may be filed and shall not postpone the effectiveness of such rule or action. This action may not be challenged later in proceedings to enforce its requirements (*See* Section 307(b)(2)).

List of Subjects in 40 CFR Part 52

Environmental protection, Air pollution control, Hydrocarbons, Incorporation by reference, Intergovernmental relations, Ozone, Reporting and recordkeeping requirements.

Dated: April 5, 1996.

Valdas V. Adamkus,

Regional Administrator.

For the reasons stated in the preamble, part 52, chapter I, title 40 of the Code of Federal Regulations is amended as follows:

PART 52—[AMENDED]

1. The authority citation for part 52 continues to read as follows:

Authority: 42 U.S.C. 7401–7671q.

Subpart YY—Wisconsin

2. Section 52.2570 is amended by adding paragraph (c)(93) to read as follows:

§ 52.2570 Identification of plan.

* * * * *

(c) * * *

(93) A revision to the ozone State Implementation Plan (SIP) was submitted by the Wisconsin Department of Natural Resources on December 11, 1995 and later supplemented on January 12, 1996. This revision consists of a volatile organic compound regulation that establishes reasonably available control technology for facilities that use industrial adhesives.

(i) Incorporation by reference. The following sections of the Wisconsin Administrative Code are incorporated by reference.

(A) NR 422.02(1e), (1m) and (28j) as created and published in the (Wisconsin) Register, August, 1995, No. 476, effective September 1, 1995.

(B) NR 422.127 as created and published in the (Wisconsin) Register, August, 1995, No. 476, effective September 1, 1995.

(C) NR 422.132(1)(c) as repealed, recreated and published in the (Wisconsin) Register, August, 1995, No. 476, effective September 1, 1995.

[FR Doc. 96–10129 Filed 4–24–96; 8:45 am]

BILLING CODE 6560–50–P

---

40 CFR Part 52

[FL–64–2–9611a; FRL–5444–4]

Approval and Promulgation of Implementation Plans, Florida: Approval of Revisions to the Florida SIP

AGENCY: Environmental Protection Agency (EPA).

ACTION: Direct final rule.

SUMMARY: EPA is approving revisions to the Florida State Implementation Plan (SIP) submitted by the State of Florida through the Florida Department of Environmental Protection (FDEP) on April 24, 1995. This submittal includes amendments to the federally enforceable state operating permit program and the SIP regulations for perchloroethylene dry cleaning facilities.

DATES: This final rule will be effective June 24, 1996 unless adverse or critical comments are received by May 28, 1996. If the effective date is delayed, timely notice will be published in the Federal Register.

ADDRESSES: Written comments on this action should be addressed to Joey LeVasseur, at the EPA Regional Office listed below. Copies of the documents relative to this action are available for public inspection during normal business hours at the following locations.

Air and Radiation Docket and Information Center (Air Docket 6102), U.S. Environmental Protection Agency, 401 M Street SW., Washington, DC 20460.

EPA, Region 4 Air Programs Branch, 345 Courtland Street NE., Atlanta, Georgia 30365.

Florida Department of Environmental Protection, Twin Towers Office Building, 2600 Blair Stone Road, Tallahassee, Florida 32399–2400.

FOR FURTHER INFORMATION CONTACT: Interested persons wanting to examine documents relative to this action should make an appointment with the Region 4 Air Programs Branch at least 24 hours before the visiting day. To schedule the appointment or to request additional information, contact Joey LeVasseur, Regulatory Planning and Development Section, Air Programs Branch, Air, Pesticides & Toxics Management Division, Region 4 EPA, 345 Courtland Street, NE., Atlanta, Georgia 30365. The telephone number is 404/347–3555 ext. 4215. Reference file FL64–2–9611a.

SUPPLEMENTARY INFORMATION: EPA is approving revisions to the Florida SIP submitted by the State of Florida through the FDEP on April 24, 1995. These revisions amend the federally enforceable state operating permit program and the SIP regulations for perchloroethylene dry cleaning facilities. The following is a description of the revisions. The regulations are more fully discussed in the official SIP submittal that is available at the Region IV office listed under the **ADDRESSES** section of this notice.

62–210.200 and 62.296.200

These sections were updated to include ''emission control equipment'' within the definition of ''dry cleaning facility,'' for consistency with the definitions and requirements of the Title V program.

62–210.300(2)(b)

This section previously was unclear and was revised to clarify the requirements for federally enforceable state operating permits (FESOPs).

62–210.300(4)

This section was revised to provide a temporary exemption to area source dry cleaning facilities from the State's minor source preconstruction review requirements.

62–296.412

This section was revised to update the applicable requirements for perchloroethylene dry cleaning facilities. The amendments make it clear that perchloroethylene facilities which have not yet been permitted under Title V continue to be subject to the requirements of this section in the interim.

Final Action

In this action, EPA is approving the revision to the SIP submitted by the State of Florida through the FDEP on April 24, 1995. The EPA is publishing this rule making without a prior proposal for approval because the Agency views this as a noncontroversial amendment and anticipates no adverse comments. However, in a separate document in this Federal Register publication, the EPA is proposing to approve the SIP revision should adverse or critical comments be filed. This action will be effective June 24, 1996 unless, within 30 days of its publication, adverse or critical comments are received.

If the EPA receives such comments, this action will be withdrawn before the

effective date by publishing a subsequent document that will withdraw the final action. All public comments received will then be addressed in a subsequent final rule based on the separate proposed rule. The EPA will not institute a second comment period on this action. Any parties interested in commenting on this action should do so at this time. If no such comments are received, the public is advised that this action will be effective June 24, 1996.

Under section 307(b)(1) of the Clean Air Act (CAA), 42 U.S.C. 7607(b)(1), petitions for judicial review of this action must be filed in the United States Court of Appeals for the appropriate circuit by June 24, 1996. Filing a petition for reconsideration by the Administrator of this final rule does not affect the finality of this rule for purposes of judicial review nor does it extend the time within which a petition for judicial review may be filed, and shall not postpone the effectiveness of such rule or action. This action may not be challenged later in proceedings to enforce its requirements. (See section 307(b)(2) of the CAA, 42 U.S.C. 7607(b)(2).)

This action has been classified as a Table 3 action for signature by the Regional Administrator under the procedures published in the Federal Register on January 19, 1989 (54 FR 2214–2225), as revised by a July 10, 1995 memorandum from Mary Nichols, Assistant Administrator for Air and Radiation. The Office of Management and Budget (OMB) has exempted this regulatory action from E.O. 12866 review.

Nothing in this action shall be construed as permitting or allowing or establishing a precedent for any future request for a revision to any state implementation plan. Each request for revision to the state implementation plan shall be considered separately in light of specific technical, economic, and environmental factors and in relation to relevant statutory and regulatory requirements.

Under the Regulatory Flexibility Act, 5 U.S.C. 600 *et seq.*, EPA must prepare a regulatory flexibility analysis assessing the impact of any proposed or final rule on small entities. 5 U.S.C. 603 and 604. Alternatively, EPA may certify that the rule will not have a significant impact on a substantial number of small entities. Small entities include small businesses, small not-for-profit enterprises, and government entities with jurisdiction over populations of less than 50,000.

SIP approvals under section 110 and subchapter I, part D of the CAA do not create any new requirements, but simply approve requirements that the State is already imposing. Therefore, because the Federal SIP-approval does not impose any new requirements, I certify that it does not have a significant impact on any small entities affected. Moreover, due to the nature of the Federal-state relationship under the CAA, preparation of a regulatory flexibility analysis would constitute Federal inquiry into the economic reasonableness of state action. The CAA forbids EPA to base its actions concerning SIPs on such grounds. *Union Electric Co.* v. *U.S. E.P.A.*, 427 U.S. 246, 256–66 (S.Ct. 1976); 42 U.S.C. section 7410(a)(2) and 7410(k)(3).

Unfunded Mandates

Under Sections 202, 203, and 205 of the Unfunded Mandates Reform Act of 1995 (''Unfunded Mandates Act''), signed into law on March 22, 1995, EPA must undertake various actions in association with proposed or final rules that include a Federal mandate that may result in estimated costs of $100 million or more to the private sector, or to State, local, or tribal governments in the aggregate.

Through submission of this state implementation plan or plan revision, the State and any affected local or tribal governments have elected to adopt the program provided for under Section 110 of the CAA. These rules may bind State, local and tribal governments to perform certain actions and also require the private sector to perform certain duties. EPA has examined whether the rules being approved by this action will impose no new requirements, since such sources are already subject to these regulations under State law. Accordingly, no additional costs to State, local, or tribal governments, or to the private sector, result from this action, and therefore there will be no significant impact on a substantial number of small entities.

List of Subjects in 40 CFR Part 52

Environmental protection, Air pollution control, Hydrocarbons, Incorporation by reference, Intergovernmental relations, Nitrogen dioxide, Ozone, Reporting and recordkeeping requirements.

Dated: January 29, 1996.

Phyllis P. Harris,

Acting Regional Administrator.

Part 52 of chapter I, title 40, *Code of Federal Regulations,* is amended as follows:

PART 52—[AMENDED]

1. The authority citation for part 52 continues to read as follows:

Authority: 42 U.S.C. 7401–7671q.

Subpart K—Florida

2. Section 52.520, is amended by adding paragraph (c)(94) to read as follows:

§ 52.520 Identification of plan.

* * * * *

(c) * * *

(94) Revisions to the Florida SIP regarding perchloroethylene dry cleaning facilities submitted on April 24, 1995.

(i) Incorporation by reference.

Sections 62–210.200(17) and (48)(c); 62–210.300(2)(b) and (4); 62–296.200(58); and 62–296.412 of the F.A.C., effective April 18, 1995.

(ii) Other material. None.

[FR Doc. 96–10127 Filed 4–24–96; 8:45 am]

BILLING CODE 6560–50–P

---

40 CFR Parts 60 and 61

[AD–FRL 5407–4]

Standards of Performance for New Stationary Sources National Emission Standards for Hazardous Air Pollutants Addition of Method 29 to Appendix A of Part 60 and Amendments to Method 101A of Appendix B of Part 61

AGENCY: Environmental Protection Agency (EPA).

ACTION: Final rule.

SUMMARY: This rule adds Method 29, ''Determination of Metals Emissions from Stationary Sources,'' to Appendix A of Part 60, and makes amendments to Method 101A of Appendix B of Part 61. Method 29 is being added so that it can be used to determine cadmium, lead, and mercury emissions from municipal waste combustors (MWC) under subpart Ea of part 60. The amendments to Method 101A of appendix B of part 61 are to expand that method's applicability, and to revise procedures for handling and analyzing samples collected by the sampling train.

EFFECTIVE DATE: April 25, 1996.

Incorporation by Reference. The incorporation by reference of certain publications listed in the regulation is approved by the Director of the Office of the Federal Register April 25, 1996.

ADDRESSES: *Docket*. Docket No. A–94–28, containing materials relevant to this rulemaking, is available for public inspection and copying between 8:30 a.m. and Noon, and 1:30 and 3:30 p.m.,

Monday through Friday, at EPA's Air And Docket Section, Room M1500, First Floor, Waterside Mall, Gallery 1, 401 M Street, S.W., Washington, D.C. 20460. A reasonable fee may be charged for copying.

FOR FURTHER INFORMATION CONTACT: William Grimley at (919) 541–1065, Source Characterization Group B (MD–19), Emissions, Monitoring, and Analysis Division, U.S. Environmental Protection Agency, Research Triangle Park, North Carolina 27711.

SUPPLEMENTARY INFORMATION:

I. The Rulemaking

Under Subparts Ca and Ea, the EPA promulgated guidelines and standards to regulate mercury, cadmium, and lead emissions from MWC's which were published in the Federal Register on December 19, 1995 (see 60 FR 65382). Method 29 is being promulgated for addition to Appendix A of 40 CFR Part 60 and will serve as the compliance test method for mercury, cadmium, and lead. Amendments to Method 101A of Appendix B of Part 61 are being promulgated to provide consistency with Method 29. These regulations were proposed on September 20, 1994 (see 59 FR 48259).

II. Public Participation

The opportunity to hold a public hearing on October 20, 1994 at 10 a.m. was present in the proposal notice, but no one wanted to make an oral presentation. The public comment period was from September 21, 1994 to November 21, 1994.

III. Significant Comments and Changes to the Proposed Rulemaking

One comment letter was received from the proposed rulemaking. The comments and responses are summarized in this preamble.

The first comment dealt with the analytical detection limits stated in Method 29. The commenter believes the detection limits are unrealistically low, and represent values achievable only under ideal conditions. The commenter concludes by saying that the method should state that it is the analyst's responsibility to determine the actual detection limit achieved.

The detection limits stated in Method 29 are those listed in the *SW–846* methods manual, and EPA believes they are reasonable ones for use in this application of *SW–846* analytical methods. However, Method 29 as proposed is clear in its discussion of the application of quality assurance procedures to document the quality of the data actually produced, and is also clear in the description of the procedure to be used to establish the actual detection limits achieved during the measurement of emissions.

The second comment addressed the point that dilution is likely to be effective in avoiding the analytical problem of spectral interference only if the analyte is present at a much greater concentration than the interferant. The commenter then suggests that Method 29 be revised to say that the effective way to adjust for spectral interference is by making background corrections or overlap corrections.

The EPA agrees with this comment, and Section 2.5 of the Method has been revised to permit these corrective techniques.

The third comment addressed the use of an alumina torch in the inductively coupled argon plasma (ICAP) emission spectroscopy procedure. The commenter believes that few ICAP users have this capability, and that an alternative technique for dealing with hydrogen fluoride could be suggested in the Method.

The EPA notes that the use of an alumina torch in this procedure has been described in related methodology for several years and is commercially available and is in use by many analysts. The alternative procedure suggested in the comment may be suitable if the detection limits needed in the particular emission measurement situation can be met.

The fourth comment addressed the required purity of the nickel nitrate used to produce the nickel nitrate matrix modifier. The commenter suggests that commercial nickel nitrate may contain small amounts of impurities.

The EPA is not aware of instances where commercial nickel nitrate that would be purchased for this purpose would contain objectionable amounts of impurities, however the Method has been revised to permit other nickel compounds of suitable purity to be used.

The fifth and final comment made a general statement concerning the length and complexity of the Method, with the commenter suggesting that the EPA should attempt to streamline and simplify the Method in order to make it less costly and easier to use.

The EPA recognizes the need to simplify methods to reduce costs, and believes that to meet the needed quality of the data to be generated by Method 29, that the best possible effort has been made.

IV. Administrative Requirements

A. Docket

The docket is an organized and complete file of all the information submitted to or otherwise considered by the EPA in the development of this final rulemaking. The principal purposes of the docket are: (1) to allow interested parties to identify and locate documents so that they can effectively participate in the rulemaking process, and (2) to serve as the record in case of judicial review (except for interagency review materials) [Section 307(d)(7)(A)].

B. Office of Management and Budget Review

1. Paperwork Reduction Act

This rule does not contain any information collection requirements subject to the Office of Management and Budget (OMB) review under the Paperwork Reduction Act, 44 U.S.C. 3501 *et seq.*

2. Executive Order 12866 Review

Under Executive Order 12866 (58 FR 51735, October 4, 1993), the EPA must determine whether the regulatory action is ''significant'' and therefore subject to the OMB review and the requirements of the Executive Order. The Order defines ''significant'' regulatory action as one that is likely to lead to a rule that may:

1. Have an annual effect on the economy of $100 million or more, or adversely affect in a material way the economy, a sector of the economy, productivity, competition, jobs, the environment, public health or safety, or State, local or tribal governments or communities;
2. Create a serious inconsistency or otherwise interfere with an action taken or planned by another agency;
3. Materially alter the budgetary impact of entitlements, grants, users fees, or loan programs or the rights and obligations of recipients thereof; or
4. Raise novel legal or policy issues arising out of legal mandates, the President's priorities, or the principles set forth in the Executive Order.

Pursuant to the terms of Executive Order 12866, the EPA does not consider this action to be significant because it does not involve any of the above mentioned items.

D. Unfunded Mandates Act

Section 202 of the Unfunded Mandates Reform Act of 1995 (''Unfunded Mandates Act'') (signed into law on March 22, 1995) requires that the Agency prepare a budgetary impact statement before promulgating a rule that includes a Federal mandate

that may result in expenditure by State, local, and tribal governments, in aggregate, or by the private sector of $100 million or more in any one year. Section 204 requires the Agency to establish a plan for obtaining input from and informing, educating, and advising any small governments that may be significantly or uniquely affected by the rule.

Under section 205 of the Unfunded Mandates Act, the Agency must identify and consider a reasonable number of regulatory alternatives before promulgating a rule for which a budgetary impact statement must be prepared. The agency must select from those alternatives the least costly, most cost-effective, or least burdensome alternative that achieves the objectives of the rule, unless the Agency explains why this alternative is not selected or the selection of this alternative is inconsistent with law.

Because this rule is estimated to result in the expenditure by State, local, and tribal governments or the private sector of less than $100 million in any one year, the Agency has not prepared a budgetary impact statement or specifically addressed the selection of the least costly, most cost-effective, or least burdensome alternative. Because small governments will not be significantly or uniquely affected by this rule, the Agency is not required to develop a plan with regard to small governments.

E. Regulatory Flexibility Act Compliance

Pursuant to the provisions of 5 U.S.C. 601 *et seq.*, I hereby certify that this final rule will not have an economic impact on small entities because no additional costs will be incurred.

List of Subjects in 40 CFR Parts 60 and 61

Environmental protection, Air pollution control, Arsenic, Asbestos, Beryllium, Cadmium, Lead, Hazardous materials, Incorporation by reference, Intergovernmental relations, Mercury, Municipal waste combustors, Reporting and recordkeeping requirements, Sewage sludge incineration.

Statutory Authority. The statutory authority for this final rule is provided by sections 101, 111, 112, 114, 116, 129, and 301 of the Clean Air Act, as amended; 42 U.S.C., 7401, 7411, 7412, 7414, 7416, 7429, and 7601.

Dated: January 18, 1996.

Carol M. Browner,

Administrator.

40 CFR parts 60 and 61 are amended as follows:

PART 60—[AMENDED]

1. The authority citation for part 60 continues to read as follows:

Authority: 42 U.S.C. 7401, 7411, 7412, 7414, 7416, and 7601.

2. Section 60.17 is amended by revising paragraph (a)(22) and by adding paragraphs (i) and (j) to read as follows:

§ 60.17 Incorporations by reference.

* * * * *

(a) * * *

(22) ASTM D 1193–77, Standard Specification for Reagent Water, for appendix A to part 60, Method 6, par. 3.1.1; Method 7, par. 3.2.2; Method 7C, par. 3.1.1; Method 7D, par. 3.1.1; Method 8, par. 3.1.3; Method 12, par. 4.1.3; Method 25D, par. 3.2.2.4; Method 26A, par. 3.1.1; Method 29, pars. 4.2.2., 4.4.2., and 4.5.6.

* * * * *

(i) Test Methods for Evaluating Solid Waste, Physical/Chemical Methods,'' EPA Publication SW–846 Third Edition (November 1986), as amended by Updates I (July, 1992), II (September 1994), IIA (August, 1993), and IIB (January, 1995). Test Method are incorporated by reference for appendix A to part 60, Method 29, pars. 2.2.1; 2.3.1; 2.5; 3.3.12.1; 3.3.12.2; 3.3.13; 3.3.14; 5.4.3; 6.2; 6.3; 7.2.1; 7.2.3; and Table 29–2. The Third Edition of SW–846 and Updates I, II, IIA, and IIB (document number 955–001–00000–1) are available from the Superintendent of Documents, U.S. Government Printing Office, Washington, DC 20402, (202) 512–1800. Copies may be obtained from the Library of the U.S. Environmental Protection Agency, 401 M Street, SW., Washington, DC 20460.

(j) Standard Methods for the Examination of Water and Wastewater, 16th edition, 1985. Method 303F Determination of Mercury by the Cold Vapor Technique. This document may be obtained from the American Public Health Association, 1015 18th Street, NW., Washington, DC 20036, and is incorporated by reference for Method 29, pars 5.4.3; 6.3; and 7.2.3 of appendix A to part 60.

3. In part 60, by adding method 29 to appendix A to read as follows:

Appendix A—Test Methods

* * * * *

Method 29—Determination of Metals Emissions from Stationary Sources

1. Applicability and Principle

1.1 Applicability. This method is applicable to the determination of antimony (Sb), arsenic (As), barium (Ba), beryllium (Be), cadmium (Cd), chromium (Cr), cobalt (Co), copper (Cu), lead (Pb), manganese (Mn), mercury (Hg), nickel (Ni), phosphorus (P), selenium (Se), silver (Ag), thallium (T1), and zinc (Zn) emissions from stationary sources. This method may be used to determine particulate emissions in addition to the metals emissions if the prescribed procedures and precautions are followed.

1.1.1 Hg emissions can be measured, alternatively, using EPA Method 101A of Appendix B, 40 CFR Part 61. Method 101–A measures only Hg but it can be of special interest to sources which need to measure both Hg and Mn emissions.

1.2 Principle. A stack sample is withdrawn isokinetically from the source, particulate emissions are collected in the probe and on a heated filter, and gaseous emissions are then collected in an aqueous acidic solution of hydrogen peroxide (analyzed for all metals including Hg) and an aqueous acidic solution of potassium permanganate (analyzed only for Hg). The recovered samples are digested, and appropriate fractions are analyzed for Hg by cold vapor atomic absorption spectroscopy (CVAAS) and for Sb, As, Ba, Be, Cd, Cr, Co, Cu, Pb, Mn, Ni, P, Se, Ag, Tl, and Zn by inductively coupled argon plasma emission spectroscopy (ICAP) or atomic absorption spectroscopy (AAS). Graphite furnace atomic absorption spectroscopy (GFAAS) is used for analysis of Sb, As, Cd, Co, Pb, Se, and Tl if these elements require greater analytical sensitivity than can be obtained by ICAP. If one so chooses, AAS may be used for analysis of all listed metals if the resulting in-stack method detection limits meet the goal of the testing program. Similarly, inductively coupled plasma-mass spectroscopy (ICP–MS) may be used for analysis of Sb, As, Ba, Be, Cd, Cr, Co, Cu, Pb, Mn, Ni, As, Tl and Zn.

2. Range, Detection Limits, Precision, and Interferences

2.1 Range. For the analysis described and for similar analyses, the ICAP response is linear over several orders of magnitude. Samples containing metal concentrations in the nanograms per ml (ng/ml) to micrograms per ml (μg/ml) range in the final analytical solution can be analyzed using this method. Samples containing greater than approximately 50 μg/ml As, Cr, or Pb should be diluted to that level or lower for final analysis. Samples containing greater than approximately 20 μg/ml of Cd should be diluted to that level before analysis.

2.2 Analytical Detection Limits. (Note: See section 2.3 for the description of in-stack detection limits.)

2.2.1 ICAP analytical detection limits for the sample solutions (based on Method 6010 in EPA Publication SW–846, Third Edition (November 1986) including updates I, II, IIA, and IIB, as incorporated by reference in § 60.17(i)) are approximately as follows: Sb (32 ng/ml), As (53 ng/ml), Ba (2 ng/ml), Be (0.3 ng/ml), Cd (4 ng/ml), Cr (7 ng/ml), Co (7 ng/ml), Cu (6 ng/ml), Pb (42 ng/ml), Mn (2 ng/ml), Ni (15 ng/ml), P (75 ng/ml), Se (75 ng/ml), Ag (7 ng/ml), Tl (40 ng/ml), and Zn (2 ng/ml). ICP–MS analytical detection limits (based on based on Method 6020 in EPA Publication SW–846, Third Edition (November 1986) as incorporated by reference in § 60.17(i)) are lower generally by a factor of ten or more. Be is lower by a factor

of three. The actual sample analytical detection limits are sample dependent and may vary due to the sample matrix.

2.2.2 The analytical detection limits for analysis by direct aspiration AAS are approximately as follow: Sb (200 ng/ml), As (2 ng/ml), Ba (100 ng/ml), Be (5 ng/ml), Cd (5 ng/ml), Cr (50 ng/ml), Co (50 ng/ml), Cu (20 ng/ml), Pb (100 ng/ml), Mn (10 ng/ml), Ni (40 ng/ml), Se (2 ng/ml), Ag (10 ng/ml), Tl (100 ng/ml), and Zn (5 ng/ml).

2.2.3 The detection limit for Hg by CVAAS (on the resultant volume of the *disgestion* of the aliquots taken for Hg analyses) can be approximately 0.02 to 0.2ng/ml, depending upon the type of CVAAS analytical instrument used.

2.2.4 The use of GFAAS can enhance the detection limits compared to direct aspiration AAS as follows: Sb (3 ng/ml), As (1 ng/ml), Be (0.2 ng/ml), Cd (0.1 ng/ml), Cr (1 ng/ml), Co (1 ng/ml), Pb (1 ng/ml), Se (2 ng/ml), and T1 (ng/ml).

2.3 *In-stack Detection Limits.*

2.3.1 For test planning purposes in-stack detection limits can be developed by using the following information (1) the procedures described in this method, (2) the analytical detection limits described in Section 2.2 and in EPA Publication SW–846, Third Edition (November 1986) including updates I, II, IIA and IIB, as incorporated by reference in § 60.17(i), (3) the normal volumes of 300 ml (Analytical Fraction 1) for the front-half and 150 ml (Analytical Fraction 2A) for the back-half samples, and (4) a stack gas sample volume of 1.25 m^3. The resultant in-stack method detection limits for the above set of conditions are presented in Table 29–1 and were calculated by using Eq. 29–1.

$$A \times B/C = D \qquad \text{Eq. 29–1}$$

Where:

A=Analytical detectin limit, µg/ml.
B=Liquid volume of digested sample prior to aliquotting for analysis, Ml.
C=Stack sample gas volume, dsm^3.
D=In-stack detection limit, µg/m^3.

TABLE 29–1.—IN-STACK METHOD DETECTION LIMITS (µg/m^3) FOR THE FRONT-HALF, THE BACK-HALF, AND THE TOTAL SAMPLING TRAIN USING ICAP AND AAS

Metal	Front-half: Probe and filter	Back-half: Impingers 1–3	Back-half: Impingers (4–6) [a]	Total train:
Antimony	[1] 7.7 (0.7)	[1] 3.8 (0.4)		[1] 11.5 (1.1)
Arsenic	[1] 12.7 (0.3)	[1] 6.4 (0.1)		[1] 19.1 (0.4)
Barium	0.5	0.3		0.8
Beryllium	[1] 0.07 (0.05)	[1] 0.04 (0.03)		[1] 0.11 (0.08)
Cadmium	[1] 1.0 (0.02)	[1] 0.5 (0.01)		[1] 1.5 (0.03)
Chromium	[1] 1.7 (0.2)	[1] 0.8 (0.1)		[1] 2.5 (0.3)
Cobalt	[1] 1.7 (0.2)	[1] 0.8 (0.1)		[1] 2.5 (0.3)
Copper	1.4	0.7		2.1
Lead	[1] 10.1 (0.2)	[1] 5.0 (0.1)		[1] 15.1 (0.3)
Manganese	[1] 0.5 (0.2)	[1] 0.2 (0.1)		[1] 0.7 (0.3)
Mercury	[2] 0.06	[2] 0.3	[2] 0.2	[2] 0.56
Nickel	3.6	1.8		5.4
Phosphorus	18	9		27
Selenium	[1] 18 (0.5)	[1] 9 (0.3)		[1] 27 (0.8)
Silver	1.7	0.9		2.6
Thallium	[1] 9.6 (0.2)	[1] 4.8 (0.1)		[1] 14.4 (0.3)
Zinc	0.5	0.3		0.8

[a] Mercury analysis only.
[1] Detection limit when analyzed by GFAAS.
[2] Detection limit when analyzed by CVAAS, estimated for Back-Half and Total Train. See Sections 2.2 and 5.4.3.
Note: Actual method in-stack detection limits may vary from these values, as described in Section 2.3.3.

2.3.2 To ensure optimum precision/resolution in the analyses, the target concentrations of metals in the analytical solutions should be at least ten times their respective analytical detection limits. Under certain conditions, and with greater care in the analytical procedure, these concentrations can be as low as approximately three times the respective analytical detection limits without seriously impairing the precision of the analyses. On at least one sample run in the source test, and for each metal analyzed, perform either repetitive analyses, Method of Standard Additions, serial dilution, or matrix spike addition, etc., to document the quality of the data.

2.3.3 Actual in-stack method detection limits are based on actual source sampling parameters and analytical results as described above. If required, the method in-stack detection limits can be improved over those shown in Table 29–1 for a specific test by either increasing the sampled stack gas volume, reducing the total volume of the digested samples, improving the analytical detection limits, or any combination of the three. For extremely low levels of *Hg only*, the aliquot size selected for digestion and analysis can be increased to as much as 10 ml, thus improving the in-stack detection limit by a factor of ten compared to a 1 ml aliquot size.

2.3.3.1 A nominal one hour sampling run will collect a stack gas sampling volume of about 1.25 m^3. If the sampling time is increased to four hours and 5 m^3 are collected, the in-stack method detection limits would be improved by a factor of four compared to the values shown in Table 29–1.

2.3.3.2 The in-stack detection limits assume that all of the sample is digested and the final liquid volumes for analysis are the normal values of 300 ml for Analytical Fraction 1, and 150 ml for Analytical Fraction 2A. If the volume of Analytical Fraction 1 is reduced from 300 to 30 ml, the in-stack detection limits for that fraction of the sample would be improved by a factor of ten. If the volume of Analytical Fraction 2A is reduced from 150 to 25 ml, the in-stack detection limits for that fraction of the sample would be improved by a factor of six. Matrix effect checks are necessary on sample analyses and typically are of much greater significance for samples that have been concentrated to less than the normal original sample volume. Reduction of Analytical Fractions 1 and 2A to volumes of less than 30 and 25 ml, respectively, could interfere with the redissolving of the residue and could increase interference by other compounds to an intolerable level.

2.3.3.3 When both of the modifications described in Sections 2.3.3.1 and 2.3.3.2 are used simultaneously on one sample, the resultant improvements are multiplicative. For example, an increase in stack gas volume by a factor of four and a reduction in the total liquid sample digested volume of both Analytical Fractions 1 and 2A by a factor of six would result in an improvement by a factor of twenty-four of the in-stack method detection limit.

2.4 Precision. The precision (relative standard deviation) for each metal detected in a method development test performed at

a sewage sludge incinerator were found to be as follows: Sb (12.7 percent), As (13.5 percent), Ba (20.6 percent), Cd (11.5 percent), Cr (11.2 percent), Cu (11.5 percent), Pb (11.6 percent), P (14.6 percent), Se (15.3 percent), Tl (12.3 percent), and Zn (11.8 percent). The precision for Ni was 7.7 percent for another test conducted at a source simulator. Be, Mn, and Ag were not detected in the tests. However, based on the analytical detection limits of the ICAP for these metals, their precisions could be similar to those for the other metals when detected at similar levels.

2.5 Interferences. Iron (Fe) can be a spectral interference during the analysis of As, Cr, and Cd by ICAP. Aluminum (Al) can be a spectral interference during the analysis of As and Pb by ICAP. Generally, these interferences can be reduced by diluting the analytical sample, but such dilution raises the in-stack detection limits. Background and overlap corrections may be used to adjust for spectral interferences. Refer to Method 6010 in EPA Publication SW–846 Third Edition (November 1986) including updates I, II, IIA and IIB, as incorporated by reference in § 60.17(i) the other analytical methods used for details on potential interferences to this method. For all GFAAS analyses, use matrix modifiers to limit interferences, and matrix match all standards.

3. Apparatus

3.1 Sampling. A schematic of the sampling train is shown in Figure 29–1. It has general similarities to the Method 5 train.

BILLING 6560–50–M

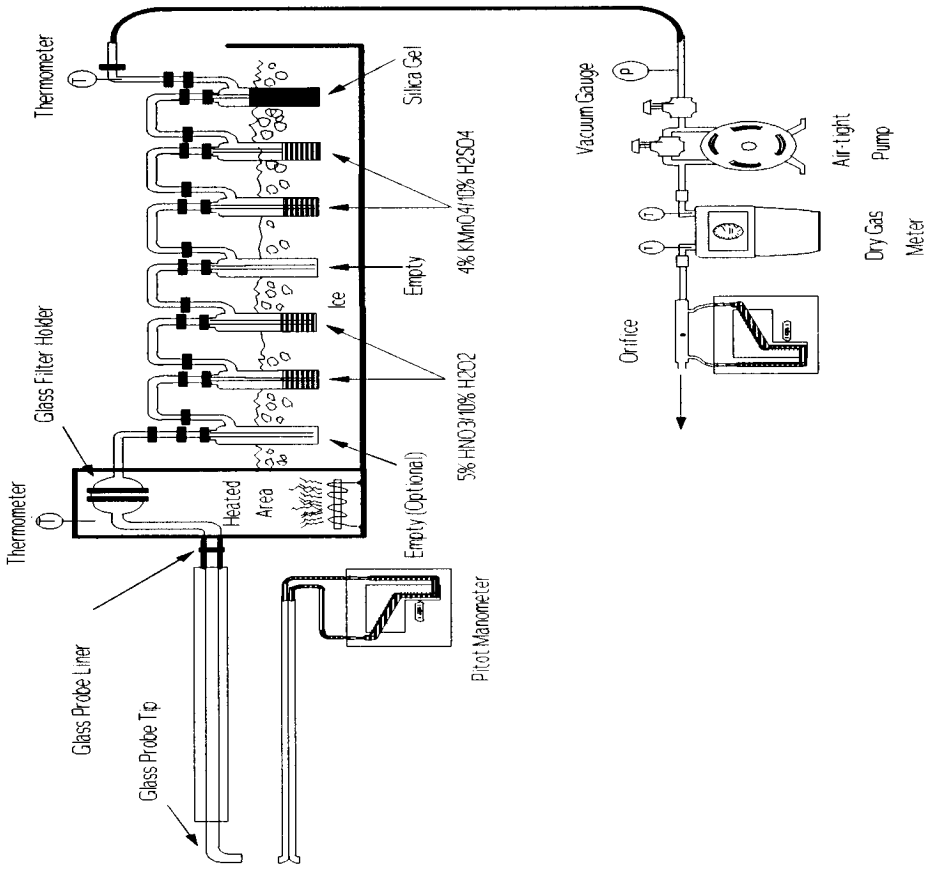

Figure 29-1. Sampling train.

BILLING 6560–50–C

3.1.1 Probe Nozzle (Probe Tip) and Borosilicate or Quartz Glass Probe Liner. Same as Method 5, Sections 2.1.1 and 2.1.2, except that glass nozzles are required unless alternate tips are constructed of materials that are free from contamination and will not interfere with the sample. If a probe tip other than glass is used, no correction to the sample test results to compensate for the nozzle's effect on the sample is allowed. Probe fittings of plastic such as Teflon, polypropylene, etc. are recommended instead of metal fittings to prevent contamination. If one chooses to do so, a single glass piece consisting of a combined probe tip and probe liner may be used.

3.1.2 Pitot Tube and Differential Pressure Gauge. Same as Method 2, Sections 2.1 and 2.2, respectively.

3.1.3 Filter Holder. Glass, same as Method 5, Section 2.1.5, except use a Teflon filter support or other non-metallic, non-contaminating support in place of the glass frit.

3.1.4 Filter Heating System. Same as Method 5, Section 2.1.6.

3.1.5 Condenser. Use the following system for condensing and collecting gaseous metals and determining the moisture content of the stack gas. The condensing system shall consist of four to seven impingers connected in series with leak-free ground glass fittings or other leak-free, non-contaminating fittings. Use the first impinger as a moisture trap. The second impinger (which is the first HNO_3/H_2O_2 impinger) shall be identical to the first impinger in Method 5. The third impinger (which is the second HNO_3/H_2O_2 impinger) shall be a Greenburg Smith impinger with the standard tip as described for the second impinger in Method 5, Section 2.1.7. The fourth (empty) impinger and the fifth and sixth (both acidified $KMnO_4$) impingers are the same as the first impinger in Method 5. Place a thermometer capable of measuring to within 1°C (2°F) at the outlet of the last impinger. If no Hg analysis is planned, then the fourth, fifth, and sixth impingers are not used.

3.1.6 Metering System, Barometer, and Gas Density Determination Equipment. Same as Method 5, Sections 2.1.8 through 2.1.10, respectively.

3.1.7 Teflon Tape. For capping openings and sealing connections, if necessary, on the sampling train.

3.2. Sample Recovery. Same as Method 5, Sections 2.2.1 through 2.2.8 (Probe-Liner and Probe-Nozzle Brushes or Swabs, Wash Bottles, Sample Storage Containers, Petri Dishes, Glass Graduated Cylinder, Plastic Storage Containers, Funnel and Rubber Policeman, and Glass Funnel), respectively, with the following exceptions and additions:

3.2.1 Non-metallic Probe-Liner and Probe-Nozzle Brushes or Swabs. Use non-metallic probe-liner and probe-nozzle brushes or swabs for quantitative recovery of materials collected in the front-half of the sampling train.

3.2.2 Sample Storage Containers. Use glass bottles (see the *Precaution:* in Section 4.3.2 of this Method) with Teflon-lined caps that are non-reactive to the oxidizing solutions, with capacities of 1000- and 500-ml, for storage of acidified $KMnO_4$-containing samples and blanks. Glass or polyethylene bottles may be used for other sample types.

3.2.3 Graduated Cylinder. Glass or equivalent.

3.2.4 Funnel. Glass or equivalent.

3.2.5 Labels. For identifying samples.

3.2.6 Polypropylene Tweezers and/or Plastic Gloves. For recovery of the filter from the sampling train filter holder.

3.3 Sample Preparation and Analysis.

3.3.1 Volumetric Flasks, 100-ml, 250-ml, and 100-ml. For preparation of standards and sample dilutions.

3.3.2 Graduated Cylinders. For preparation of reagents.

3.3.3 Parr[R] Bombs or Microwave Pressure Relief Vessels with Capping Station (CEM Corporation model or equivalent). For sample digestion.

3.3.4 Beakers and Watch Glasses. 250-ml beakers, with watch glass covers, for sample digestion.

3.3.5 Ring Stands and Clamps. For securing equipment such as filtration apparatus.

3.3.6 Filter Funnels. For holding filter paper.

3.3.7 Disposable Pasteur Pipets and Bulbs.

3.3.8 Volumetric Pipets.

3.3.9 Analytical Balance. Accurate to within .01 mg.

3.3.10 Microwave or Conventional Oven. For heating samples at fixed power levels or temperatures, respectively.

3.3.11 Hot Plates.

3.3.12 Atomic Absorption Spectrometer (AAS). Equipped with a background corrector.

3.3.12.1 Graphite Furnace Attachment. With Sb, As, Cd, Co, Pb, Se, and Tl hollow cathode lamps (HCLs) or electrodeless discharge lamps (EDLs). Same as Methods 7041 (Sb), 7060 (As), 7131 (Cd), 7201 (Co), 7421 (Pb), 7740 (Se), and 7841 (Tl) in EPA publication SW–846 Third Edition (November 1986) including updates I, II, IIA and IIB, as incorporated by reference in § 60.17(i).

3.3.12.2 Cold Vapor Mercury Attachment. With a mercury HCL or EDL, an air recirculation pump, a quartz cell, an aerator apparatus, and a heat lamp or desiccator tube. The heat lamp shall be capable of raising the temperature at the quartz cell by 10°C above ambient, so that no condensation forms on the wall of the quartz cell. Same as Method 6020 in EPA publication SW–846 Third Edition (November 1986) including updates I, II, IIA and IIB, as incorporated by reference in § 60.17(i). See Note No. 2: Section 5.4.3 for other acceptable approaches for analysis of Hg in which analytical detection limits of 0.002 ng/ml were obtained.

3.3.13 Inductively Coupled Argon Plasma Spectrometer. With either a direct or sequential reader and an alumina torch. Same as EPA Method 6010 in EPA publication SW–846 Third Edition (November 1986) including updates I, II, IIA and IIB, as incorporated by reference in § 60.17(i).

3.3.14 Inductively Coupled Plasma-Mass Spectrometer. Same as EPA Method 6020 in EPA publication SW–846 Third Edition (November 1986) including updates I, II, IIA and IIB, as incorporated by reference in § 60.17(i).

4. Reagents

4.1 Unless otherwise indicated, it is intended that all reagents conform to the specifications established by the Committee on Analytical Reagents of the American Chemical Society, where such specifications are available. Otherwise, use the best available grade.

4.2 Sampling Reagents.

4.2.1 Sample Filters. Without organic binders. The filters shall contain less than 1.3 µg/in.^{2} of each of the metals to be measured. Analytical results provided by filter manufacturers stating metals content of the filters are acceptable. However, if no such results are available, analyze filter blanks for each target metal prior to emission testing. Quartz fiber filters meeting these requirements are recommended. However, if glass fiber filters become available which meet these requirements, they may be used. Filter efficiencies and unreactiveness to sulfur dioxide (SO_2) or sulfur trioxide (SO_3) shall be as described in Section 3.1.1 of Method 5.

4.2.2 Water. To conform to ASTM Specification D1193–77, Type II (incorporated by reference—See § 60.17). If necessary, analyze the water for all target metals prior to field use. All target metals should be less than 1 ng/ml.

4.2.3 Nitric Acid (HNO_3). Concentrated. Baker Instra-analyzed or equivalent.

4.2.4 Hydrochloric Acid (HCL). Concentrated. Baker Instra-analyzed or equivalent.

4.2.5 Hydrogen Peroxide (H_2O_2), 30 Percent (V/V).

4.2.6 Potassium Permanganate ($KMnO_4$).

4.2.7 Sulfuric Acid (H_2SO_4). Concentrated.

4.2.8 Silica Gel and Crushed Ice. Same as Method 5, Sections 3.1.2 and 3.1.4, respectively.

4.3 Pretest Preparation of Sampling Reagents.

4.3.1 HNO_3/H_2O_2 Absorbing Solution, 5 Percent HNO_3/10 Percent H_2O_2. Add carefully with stirring 50 ml of concentrated HNO_3 to a 1000-ml volumeric flask containing approximately 500 ml of water, and then add carefully with stirring 333 ml of 30 percent H_2O_2. Dilute to volume with water. Mix well. This reagent shall contain less than 2 ng/ml of each target metal.

4.3.2 Acidic $KMnO_4$ Absorbing Solution, 4 Percent $KMnO_4$ (W/V), 10 Percent H_2SO_4 (V/V). Prepare fresh daily. Mix carefully, with stirring, 100 ml of concentrated H_2SO_4 into approximately 800 ml of water, and add water with stirring to make a volume of 1 liter: this solution is 10 percent H_2SO_4 (V/V). Dissolve, with stirring, 40 g of $KMnO_4$ into 10 percent H_2SO_4 (V/V) and add 10 percent H_2SO_4 (V/V) with stirring to make a volume of 1 liter. Prepare and store in glass bottles to prevent degradation. This reagent shall contain less than 2 ng/ml of Hg. *Precaution*: To prevent autocatalytic decomposition of the permanganate solution, filter the solution through Whatman 541

filter paper. Also, due to the potential reaction of the potassium permanganate with the acid, there could be pressure buildup in the solution storage bottle. Therefore these bottles shall not be fully filled and shall be vented to relieve excess pressure and prevent explosion potentials. Venting is required, but not in a manner that will allow contamination of the solution. A No. 70–72 hole drilled in the container cap and Teflon liner has been used.

4.3.3 HNO_3, 0.1 N. Add with stirring 6.3 ml of concentrated HNO_3 (70 percent) to a flask containing approximately 900 ml of water. Dilute to 1000 ml with water. Mix well. This reagent shall contain less than 2 ng/ml of each target metal.

4.3.4 HCl, 8 N. Carefully add with stirring 690 ml of concentrated HCl to a flask containing 250 ml of water. Dilute to 1000 ml with water. Mix well. This reagent shall contain less than 2 ng/ml of Hg.

4.4 Glassware Cleaning Reagents.

4.4.1 HNO_3, Concentrated. Fisher ACS grade or equivalent.

4.4.2 Water. To conform to ASTM Specification D1193–77, Type II (incorporated by reference—See § 60.17).

4.4.3 HNO_3, 10 Percent (V/V). Add with stirring 500 ml of concentrated HNO_3 to a flask containing approximately 4000 ml of water. Dilute to 5000 ml with water. Mix well. This reagent shall contain less than 2 ng/ml of each target metal.

4.5 Sample Digestion and Analysis Reagents.

The metals standards, except Hg, may also be made from solid chemicals as described in Citation 3 of the Bibliography. Refer to Citations 1, 2, or 5 of the Bibliography for additional information on Hg standards. The 1000 µg/ml Hg stock solution standard may be made according to Section 6.2.5 of Method 101A.

4.5.1 HCL, Concentrated.

4.5.2 Hydrofluoric Acid (HF), Concentrated.

4.5.3 HNO_3, Concentrated. Baker Instra-analyzed or equivalent.

4.5.4 HNO_3, 50 Percent (V/V). Add with stirring 125 ml of concentrated HNO_3 to 100 ml of water. Dilute to 250 ml with water. Mix well. This reagent shall contain less than 2 ng/ml of each target metal.

4.5.5 HNO_3, 5 Percent (V/V). Add with stirring 50 ml of concentrated HNO_3 to 800 ml of water. Dilute to 1000 ml with water. Mix well. This reagent shall contain less than 2 ng/ml of each target metal.

4.5.6 Water. To conform to ASTM Specification D1193–77, Type II (incorporated by reference—See § 60.17).

4.5.7 Hydroxylamine Hydrochloride and Sodium Chloride Solution. See Citation 2 of the Bibliography for preparation.

4.5.8 Stannous Chloride. See Citation 2 of the Bibliography for preparation.

4.5.9 $KMnO_4$, 5 Percent (W/V). See Citation 2 of the Bibliography for preparation.

4.5.10 H_2SO_4, Concentrated.

4.5.11 Potassium Persulfate, 5 Percent (W/V). See Citation 2 of the Bibliography for preparation.

4.5.12 Nickel Nitrate, Ni $(NO_3)_2$ $6H_2O$.

4.5.13 Lanthanum Oxide, La_2O_3.

4.5.14 Hg Standard (AAS Grade), 1000 µg/ml.

4.5.15 Pb Standard (AAS Grade), 1000 µg/ml.

4.5.16 As Standard (AAS Grade), 1000 µg/ml.

4.5.17 Cd Standard (AAS Grade), 1000 µg/ml.

4.5.18 Cr Standard (AAS Grade), 1000 µg/ml.

4.5.19 Sb Standard (AAS Grade), 1000 µg/ml.

4.5.20 Ba Standard (AAS Grade), 1000 µg/ml.

4.5.21 Be Standard (AAS Grade), 1000 µg/ml.

4.5.22 Co Standard (AAS Grade), 1000 µg/ml.

4.5.23 Cu Standard (AAS Grade), 1000 µg/ml.

4.5.24 Mn Standard (AAS Grade), 1000 µg/ml.

4.5.25 Ni Standard (AAS Grade), 1000 µg/ml.

4.5.26 P Standard (AAS Grade), 1000 µg/ml.

4.5.27 Se Standard (AAS Grade), 1000 µg/ml.

4.5.28 Ag Standard (AAS Grade), 1000 µg/ml.

4.5.29 Tl Standard (AAS Grade), 1000 µg/ml.

4.5.30 Zn Standard (AAS Grade), 1000 µg/ml.

4.5.31 Al Standard (AAS Grade), 1000 µg/ml.

4.5.32 Fe Standard (AAS Grade), 1000 µg/ml.

4.5.33 Hg Standards and Quality Control Samples. Prepare fresh weekly a 10 µg/ml intermediate Hg standard by adding 5 ml of 1000 µg/ml Hg stock solution prepared according to Method 101A to a 500-ml volumetric flask; dilute with stirring to 500 ml by first carefully adding 20 ml of 15 percent HNO_3 and then adding water to the 500-ml volume. Mix well. Prepare a 200 ng/ml working Hg standard solution fresh daily: add 5 ml of the 10 µg/ml intermediate standard to a 250-ml volumetric flask, and dilute to 250 ml with 5 ml of 4 percent $KMnO_4$, 5 ml of 15 percent HNO_3, and then water. Mix well. Use at least five separate aliquots of the working Hg standard solution and a blank to prepare the standard curve. These aliquots and blank shall contain 0.0, 1.0, 2.0, 3.0, 4.0, and 5.0 ml of the working standard solution containing 0, 200, 400, 600, 800, and 1000 ng Hg, respectively. Prepare quality control samples by making a separate 10 µg/ml standard and diluting until in the calibration range.

4.5.34 ICAP Standards and Quality Control Samples. Calibration standards for ICAP analysis can be combined into four different mixed standard solutions as follows:

MIXED STANDARD SOLUTIONS FOR ICAP ANALYSIS

Solution	Elements
I	As, Be, Cd, Mn, Pb, Se, Zn.
II	Ba, Co, Cu, Fe.
III	Al, Cr, Ni.
IV	Ag, P, Sb, Tl.

Prepare these standards by combining and diluting the appropriate volumes of the 1000 µg/ml solutions with 5 percent HNO_3. A minimum of one standard and a blank can be used to form each calibration curve. However, prepare a separate quality control sample spiked with known amounts of the target metals in quantities in the mid-range of the calibration curve. Suggested standard levels are 25 µg/ml for Al, Cr and Pb, 15 µg/ml for Fe, and 10 µg/ml for the remaining elements. Prepare any standards containing less than 1 µg/ml of metal on a daily basis. Standards containing greater than 1 µg/ml of metal should be stable for a minimum of 1 to 2 weeks. For ICP–MS, follow Method 6020 in EPA Publication SW–846 Third Edition (November 1986) including updates I, II, IIA and IIB, as incorporated by reference in § 60.17(i).

4.5.35 GFAAS Standards. Sb, As, Cd, Co, Pb, Se, and Tl. Prepare a 10 µg/ml standard by adding 1 ml of 1000 µg/ml standard to a 100-ml volumetric flask. Dilute with stirring to 100 ml with 10 percent HNO_3. For GFAAS, matrix match the standards. Prepare a 100 ng/ml standard by adding 1 ml of the 10 µg/ml standard to a 100-ml volumetric flask, and dilute to 100 ml with the appropriate matrix solution. Prepare other standards by diluting the 100 ng/ml standards. Use at least five standards to make up the standard curve. Suggested levels are 0, 10, 50, 75, and 100 ng/ml. Prepare quality control samples by making a separate 10 µg/ml standard and diluting until it is in the range of the samples. Prepare any standards containing less than 1 µg/ml of metal on a daily basis. Standards containing greater than 1 µg/ml of metal should be stable for a minimum of 1 to 2 weeks.

4.5.36 Matrix Modifiers.

4.5.36.1 Nickel Nitrate, 1 Percent (V/V). Dissolve 4.956 g of Ni $(NO_3)_2 \bullet 6H_2O$ or other nickel compound suitable for preparation of this matrix modifier in approximately 50 ml of water in a 100-ml volumetric flask. Dilute to 100 ml with water.

4.5.36.2 Nickel Nitrate, 0.1 Percent (V/V). Dilute 10 ml of 1 percent nickel nitrate solution to 100 ml with water. Inject an equal amount of sample and this modifier into the graphite furnace during GFAAS analysis for As.

4.5.36.3 Lanthanum. Carefully dissolve 0.5864 g of La_2O_3 in 10 ml of concentrated HNO_3, and dilute the solution by adding it with stirring to approximately 50 ml of water. Dilute to 100 ml with water, and mix well. Inject an equal amount of sample and this modifier into the graphite furnace during GFAAS analysis for Pb.

4.5.37 Whatman 40 and 541 Filter Papers (or equivalent). For filtration of digested samples.

5. Procedure

5.1 Sampling. The complexity of this method is such that, to obtain reliable results,

both testers and analysts must be trained and experienced with the test procedures, including source sampling; reagent preparation and handling; sample handling; safety equipment and procedures; analytical calculations; reporting; and the specific procedural descriptions throughout this method.

5.1.1 Pretest Preparation. Follow the same general procedure given in Method 5, Section 4.1.1, except that, unless particulate emissions are to be determined, the filter need not be desiccated or weighed. First, rinse all sampling train glassware with hot tap water and then wash in hot soapy water. Next, rinse glassware three times with tap water, followed by three additional rinses with water. Then soak all glassware in a 10 percent (V/V) nitric acid solution for a minimum of 4 hours, rinse three times with water, rinse a final time with acetone, and allow to air dry. Cover all glassware openings where contamination can occur until the sampling train is assembled for sampling.

5.1.2 Preliminary Determinations. Same as Method 5, Section 4.1.2.

5.1.3 Preparation of Sampling Train.

5.1.3.1 Set up the sampling train as shown in Figure 29–1. Follow the same general procedures given in Method 5, Section 4.1.3, except place 100 ml of the HNO_3/H_2O_2 solution (Section 4.3.1. of this method) in each of the second and third impingers as shown in Figure 29–1. Placee 100 ml of the acidic $KMnO_4$ absorbing solution (Section 4.3.2 of this method) in each of the fifth and sixth impingers as shown in Figure 29–1, and transfer approximately 200 to 300 g of pre-weighed silica gel from its container to the last impinger. Alternatively, the silica gel may be weighed directly in the impinger just prior to final train assembly.

5.1.3.2 Based on the specific source sampling conditions, the use of an empty first impinger can be eliminated if the moisture to be collected in the impingers will be less than approximately 100 ml.

5.1.3.3 If Hg analysis will not be performed, the fourth, fifth, and sixth impingers as shown in Figure 29–1 are not required.

5.1.3.4 To insure leak-free sampling train connections and to prevent possible sample contamination problems, use Teflon tape or other non-contaminating material instead of silicone grease.

Precaution: Exercise extreme care to prevent contamination within the train. Prevent the acidic $KMnO_4$ from contacting any glassware that contains sample material to be analyzed for Mn. Prevent acidic H_2O_2 from mixing with the acidic $KMnO_4$.

5.1.4 Leak-Check Procedures. Follow the leak-check procedures given in Method 5, Section 4.1.4.1 (Pretest Leak-Check), Section 4.1.4.2 (Leak-Checks During the Sample Run), and Section 4.1.4.3 (Post-Test Leak-Checks).

5.1.5 Sampling Train Operation. Follow the procedures given in Method 5, Section 4.1.5. When sampling for Hg, use a procedure analagous to that described in Section 7.1.1 of Method 101A, 40 CFR Part 61, Appendix B, if necessary to maintain the desired color in the last acidified permanganate impinger. For each run, record the data required on a data sheet such as the one shown in Figure 5–2 of Method 5.

5.1.6 Calculation of Percent Isokinetic. Same as Method 5, Section 4.1.6.

5.2 Sample Recovery.

5.2.1 Begin cleanup procedures as soon as the probe is removed from the stack at the end of a sampling period. The probe should be allowed to cool prior to sample recovery. When it can be safely handled, wipe off all external particulate matter near the tip of the probe nozzle and place a rinsed, non-contaminating cap over the probe nozzle to prevent losing or gaining particulate matter. Do not cap the probe tip tightly while the sampling train is cooling; a vacuum can form in the filter holder with the undesired result of drawing liquid from the impingers onto the filter.

5.2.2 Before moving the sampling train to the cleanup site, remove the probe from the sampling train and cap the open outlet. Be careful not to lose any condensate that might be present. Cap the filter inlet where the probe was fastened. Remove the umbilical cord from the last impinger and cap the impinger. Cap the filter holder outlet and impinger inlet. Use non-contaminating caps, whether ground-glass stoppers, plastic caps, serum caps, or Teflon tape to close these openings.

5.2.3 Alternatively, the following procedure may be used to disassemble the train before the probe and filter holder/oven are completely cooled: Initially disconnect the filter holder outlet/impinger inlet and loosely cap the open ends. Then disconnect the probe from the filter holder or cyclone inlet and loosely cap the open ends. Cap the probe tip and remove the umbilical cord as previously described.

5.2.4 Transfer the probe and filter-impinger assembly to a cleanup area that is clean and protected from the wind and other potential causes of contamination or loss of sample. Inspect the train before and during disassembly and note any abnormal conditions. Take special precautions to assure that all the items necessary for recovery do not contaminate the samples. The sample is recovered and treated as follows (see schematic in Figures 29–2a and 29–2b):

BILLING CODE 6560–50–M

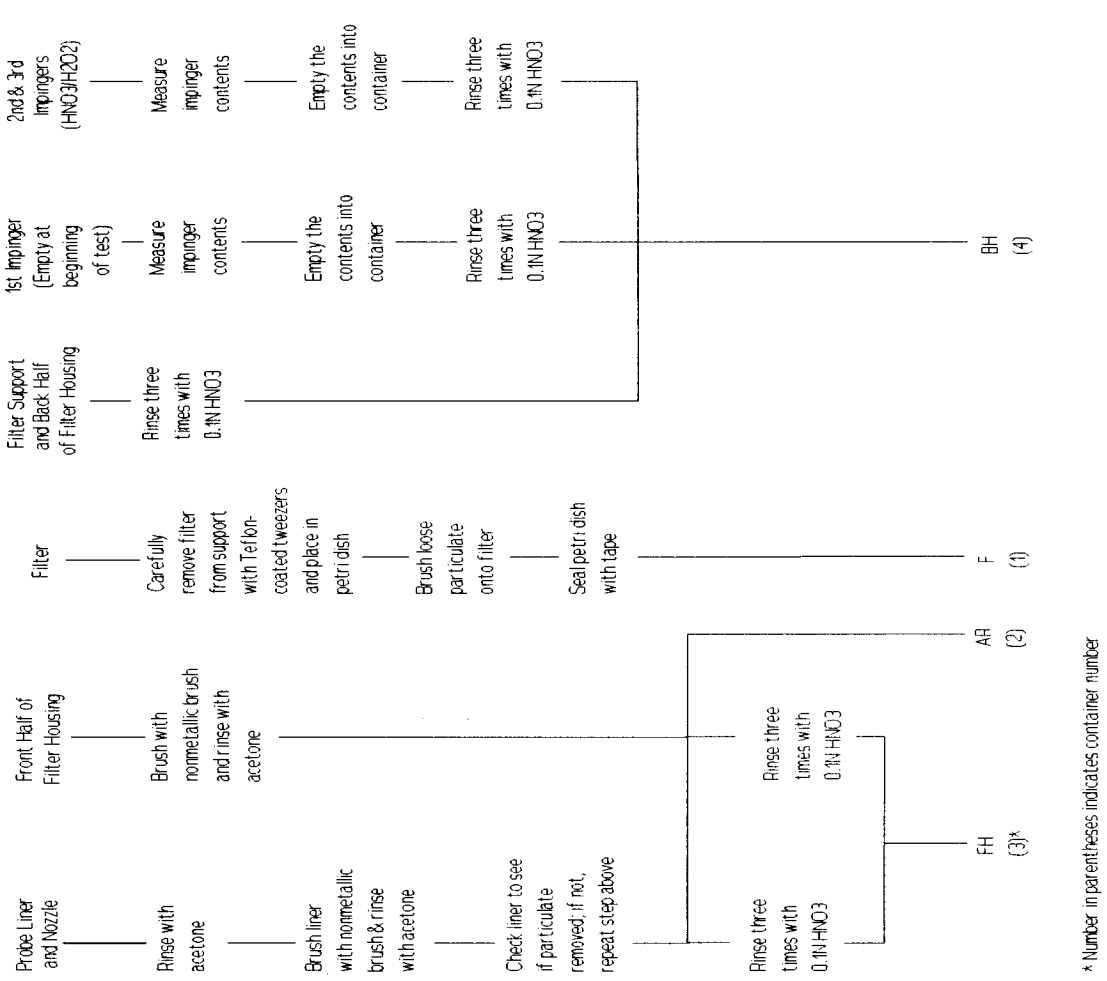

Figure 29-2a. Sample recovery scheme.

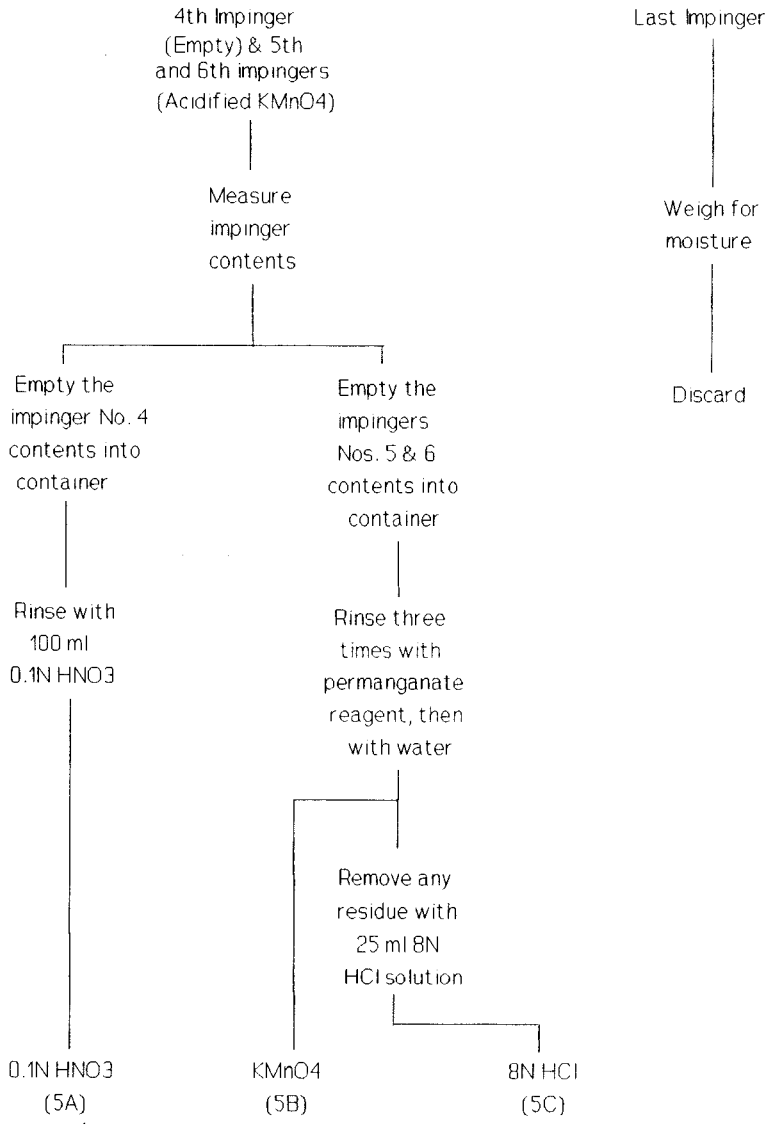

Figure 29-2b. Sample recovery scheme.

BILLING CODE 6560–50–C

5.2.5 Container No. 1 (Sample Filter). Carefully remove the filter from the filter holder and place it in its labeled petri dish container. To handle the filter, use either acid-washed polypropylene or Teflon coated tweezers or clean, disposable surgical gloves rinsed with water and dried. If it is necessary to fold the filter, make certain the particulate cake is inside the fold. Carefully transfer the filter and any particulate matter or filter fibers that adhere to the filter holder gasket to the petri dish by using a dry (acid-cleaned) nylon bristle brush. Do not use any metal-containing materials when recovering this train. Seal the labeled petri dish.

5.2.6 Container No. 2. (Acetone Rinse). Perform this procedure only if a determination of particulate emissions is to be made. Quantitatively recover particulate matter and any condensate from the probe nozzle, probe fitting, probe liner, and front half of the filter holder by washing these components with a total of 100 ml of acetone, while simultaneously taking great care to see that no dust on the outside of the probe or other surfaces gets in the sample. The use of exactly 100 ml is necessary for the subsequent blank correction procedures. Distilled water may be used instead of acetone when approved by the Administrator and shall be used when specified by the Administrator; in these cases, save a water blank and follow the Administrator's directions on analysis.

5.2.6.1 Carefully remove the probe nozzle, and clean the inside surface by rinsing with acetone from a wash bottle while brushing with a non-metallic brush. Brush until the acetone rinse shows no visible particles, then make a final rinse of the inside surface with acetone.

5.2.6.2 Brush and rinse the sample exposed inside parts of the probe fitting with acetone in a similar way until no visible particles remain. Rinse the probe liner with acetone by tilting and rotating the probe while squirting acetone into its upper end so that all inside surfaces will be wetted with acetone. Allow the acetone to drain from the lower end into the sample container. A funnel may be used to aid in transferring liquid washings to the container. Follow the acetone rinse with a non-metallic probe brush. Hold the probe in an inclined position, squirt acetone into the upper end as the probe brush is being pushed with a twisting action three times through the probe. Hold a sample container underneath the lower end of the probe, and catch any acetone and particulate matter which is brushed through the probe until no visible particulate matter is carried out with the acetone or until none remains in the probe liner on visual inspection. Rinse the brush with acetone, and quantitatively collect these washings in the sample container. After the brushing, make a final acetone rinse of the probe as described above.

5.2.6.3 It is recommended that two people clean the probe to minimize sample losses. Between sampling runs, keep brushes clean and protected from contamination. Clean the inside of the front-half of the filter holder by rubbing the surfaces with a non-metallic brush and rinsing with acetone. Rinse each surface three times or more if needed to remove visible particulate. Make a final rinse of the brush and filter holder. After all acetone washings and particulate matter have been collected in the sample container, tighten the lid so that acetone will not leak out when shipped to the laboratory. Mark the height of the fluid level to determine whether or not leakage occurred during transport. Clearly label the container to identify its contents.

5.2.7 Container No. 3 (Probe Rinse). Keep the probe assembly clean and free from contamination during the probe rinse. Rinse the probe nozzle and fitting, probe liner, and front-half of the filter holder thoroughly with a total of 100 ml of 0.1 N HNO_3, and place the wash into a sample storage container.

(Note: The use of a total of exactly 100 ml is necessary for the subsequent blank correction procedures.)

Perform the rinses as applicable and generally as described in Method 12, Section 5.2.2. Record the volume of the rinses. Mark the height of the fluid level on the outside of the storage container and use this mark to determine if leakage occurs during transport. Seal the container, and clearly label the contents. Finally, rinse the nozzle, probe liner, and front-half of the filter holder with water followed by acetone, and discard these rinses.

5.2.8 Container No. 4 (Impingers 1 through 3, Moisture Knockout Impinger, when used, HNO_3/H_2O_2 Impingers Contents and Rinses). Due to the potentially large quantity of liquid involved, the tester may place the impinger solutions from impingers 1 through 3 in more than one container, if necessary. Measure the liquid in the first three impingers to within 0.5 ml using a graduated cylinder. Record the volume. This information is required to calculate the moisture content of the sampled flue gas. Clean each of the first three impingers, the filter support, the back half of the filter housing, and connecting glassware by thoroughly rinsing with 100 ml of 0.1 N HNO_3 using the procedure as applicable in Method 12, Section 5.2.4.

(Note: The use of exactly 100 ml of 0.1 N HNO_3 rinse is necessary for the subsequent blank correction procedures. Combine the rinses and impinger solutions, measure and record the final total volume. Mark the height of the fluid level, seal the container, and clearly label the contents.)

5.2.9 Container Nos. 5A (0.1 N HNO_3*), 5B (*$KMnO_4/H_2SO_4$ absorbing solution), and 5C (8 N HCl rinse and dilution).

5.2.9.1 When sampling for Hg, pour all the liquid from the impinger (normally impinger No. 4) that immediately preceded the two permanganate impingers into a graduated cylinder and measure the volume to within 0.5 ml. This information is required to calculate the moisture content of the sampled flue gas. Place the liquid in Container No. 5A. Rinse the impinger with exactly 100 ml of 0.1 N HNO_3 and place this rinse in Container No. 5A.

5.2.9.2 Pour all the liquid from the two permanganate impingers into a graduated cylinder and measure the volume to within 0.5 ml. This information is required to calculate the moisture content of the sampled flue gas. Place this acidic $KMnO_4$ solution into Container No. 5B. Using a total of exactly 100 ml of fresh acidified $KMnO_4$ solution for all rinses (approximately 33 ml per rinse), rinse the two permanganate impingers and connecting glassware a minimum of three times. Pour the rinses into Container No. 5B, carefully assuring transfer of all loose precipitated materials from the two impingers. Similarly, using 100 ml total of water, rinse the permanganate impingers and connecting glass a minimum of three times, and pour the rinses into Container 5B, carefully assuring transfer of any loose precipitated material. Mark the height of the fluid level, and clearly label the contents. Read the Precaution: in Section 4.3.2. *NOTE:* Due to the potential reaction of $KMnO_4$ with acid, pressure buildup can occur in the sample storage bottles. Do not fill these bottles completely and take precautions to relieve excess pressure. A No. 70–72 hole drilled in the container cap and Teflon liner has been used successfully.

5.2.9.3 If no visible deposits remain after the water rinse, no further rinse is necessary. However, if deposits remain on the impinger surfaces, wash them with 25 ml of 8 N HCl, and place the wash in a separate sample container labeled No. 5C containing 200 ml of water. First, place 200 ml of water in the container. Then wash the impinger walls and stem with the HCl by turning the impinger on its side and rotating it so that the HC1 contacts all inside surfaces. Use a total of only 25 ml of 8 N HCl for rinsing both permanganate impingers combined. Rinse the first impinger, then pour the actual rinse used for the first impinger into the second impinger for its rinse. Finally, pour the 25 ml of 8 N HCl rinse carefully into the container. Mark the height of the fluid level on the outside of the container to determine if leakage occurs during transport.

5.2.10 Container No. 6 (Silica Gel). Note the color of the indicating silica gel to determine whether it has been completely spent and make a notation of its condition. Transfer the silica gel from its impinger to its original container and seal it. The tester may use a funnel to pour the silica gel and a rubber policeman to remove the silica gel from the impinger. The small amount of particles that might adhere to the impinger wall need not be removed. Do not use water or other liquids to transfer the silica gel since weight gained in the silica gel impinger is used for moisture calculations. Alternatively, if a balance is available in the field, record the weight of the spent silica gel (or silica gel plus impinger) to the nearest 0.5 g.

5.2.11 Container No. 7 (Acetone Blank). If particulate emissions are to be determined, at least once during each field test, place a 100-ml portion of the acetone used in the sample recovery process into a container labeled No. 7. Seal the container.

5.2.12 Container No. 8A (0.1 N HNO_3 Blank). At least once during each field test, place 300 ml of the 0.1 N HNO_3 solution used in the sample recovery process into a container labeled No. 8A. Seal the container.

5.2.13 Container No. 8B (Water Blank). At least once during each field test, place 100 ml of the water used in the sample recovery process into a container labeled No. 8B. Seal the container.

5.2.14 Container No. 9 (5 Percent HNO_3/10 Percent H_2O_2 Blank). At least once during each field test, place 200 ml of the 5 Percent HNO_3/10 Percent H_2O_2 solution used as the nitric acid impinger reagent into a container labeled No. 9. Seal the container.

5.2.15 Container No. 10 (Acidified $KMnO_4$ Blank). At least once during each field test, place 100 ml of the acidified $KMnO_4$ solution used as the impinger solution and in the sample recovery process into a container labeled No. 10. Prepare the container as described in Section 5.2.9.2. Read the *Precaution:* in Section 4.3.2. and read the Note in Section 5.2.9.2.

5.2.16 Container No. 11 (8 N HCl Blank). At least once during each field test, place 200 ml of water into a sample container labeled No. 11. Then carefully add with stirring 25 ml of 8 N HCl. Mix well and seal the container.

5.2.17 Container No. 12 (Sample Filter Blank). Once during each field test, place into a petri dish labeled No. 12 three unused blank filters from the same lot as the sampling filters. Seal the petri dish.

5.3 *Sample Preparation.* Note the level of the liquid in each of the containers and determine if any sample was lost during shipment. If a noticeable amount of leakage has occurred, either void the sample or use methods, subject to the approval of the Administrator, to correct the final results. A diagram illustrating sample preparation and analysis procedures for each of the sample train components is shown in Figure 29–3.

5.3.1 *Container No. 1 (Sample Filter).*

5.3.1.1 If particulate emissions are being determined, first desiccate the filter and filter catch without added heat (do not heat the filters to speed the drying) and weigh to a constant weight as described in Section 4.3 of Method 5.

5.3.1.2 Following this procedure, or initially, if particulate emissions are not being determined in addition to metals analysis, divide the filter with its filter catch into portions containing approximately 0.5 g each. Place the pieces in the analyst's choice of either individual microwave pressure relief vessels or Parr[R] Bombs. Add 6 ml of concentrated HNO_3 and 4 ml of concentrated HF to each vessel. For microwave heating, microwave the samples for approximately 12 to 15 minutes total heating time as follows: heat for 2 to 3 minutes, then turn off the microwave for 2 to 3 minutes, then heat for 2 to 3 minutes, etc., continue this alternation until the 12 to 15 minutes total heating time are completed (this procedure should comprise approximately 24 to 30 minutes at 600 watts). Microwave heating times are approximate and are dependent upon the number of samples being digested simultaneously. Sufficient heating is evidenced by sorbent reflux within the vessel. For conventional heating, heat the Parr[R] Bombs at 140 °C (285 °F) for 6 hours. Then cool the samples to room temperature, and combine with the acid digested probe rinse as required in Section 5.3.3.

5.3.1.3 If the sampling train includes an optional glass cyclone in front of the filter, prepare and digest the cyclone catch by the procedures described in section 5.3.1.2 and then combine the digestate with the digested filter sample.

5.3.2 Container No. 2 (Acetone Rinse). Note the level of liquid in the container and confirm on the analysis sheet whether or not leakage occurred during transport. If a noticeable amount of leakage has occurred, either void the sample or use methods, subject to the approval of the Administrator, to correct the final results. Measure the liquid in this container either volumetrically within 1 ml or gravimetrically within 0.5 g. Transfer the contents to an acid-cleaned, tared 250-ml beaker and evaporate to dryness at ambient temperature and pressure. If particulate emissions are being determined, desiccate for 24 hours without added heat, weigh to a constant weight according to the procedures described in Section 4.3 of Method 5, and report the results to the nearest 0.1 mg. Redissolve the residue with 10 ml of concentrated HNO_3.

BILLING CODE 6560–50–M

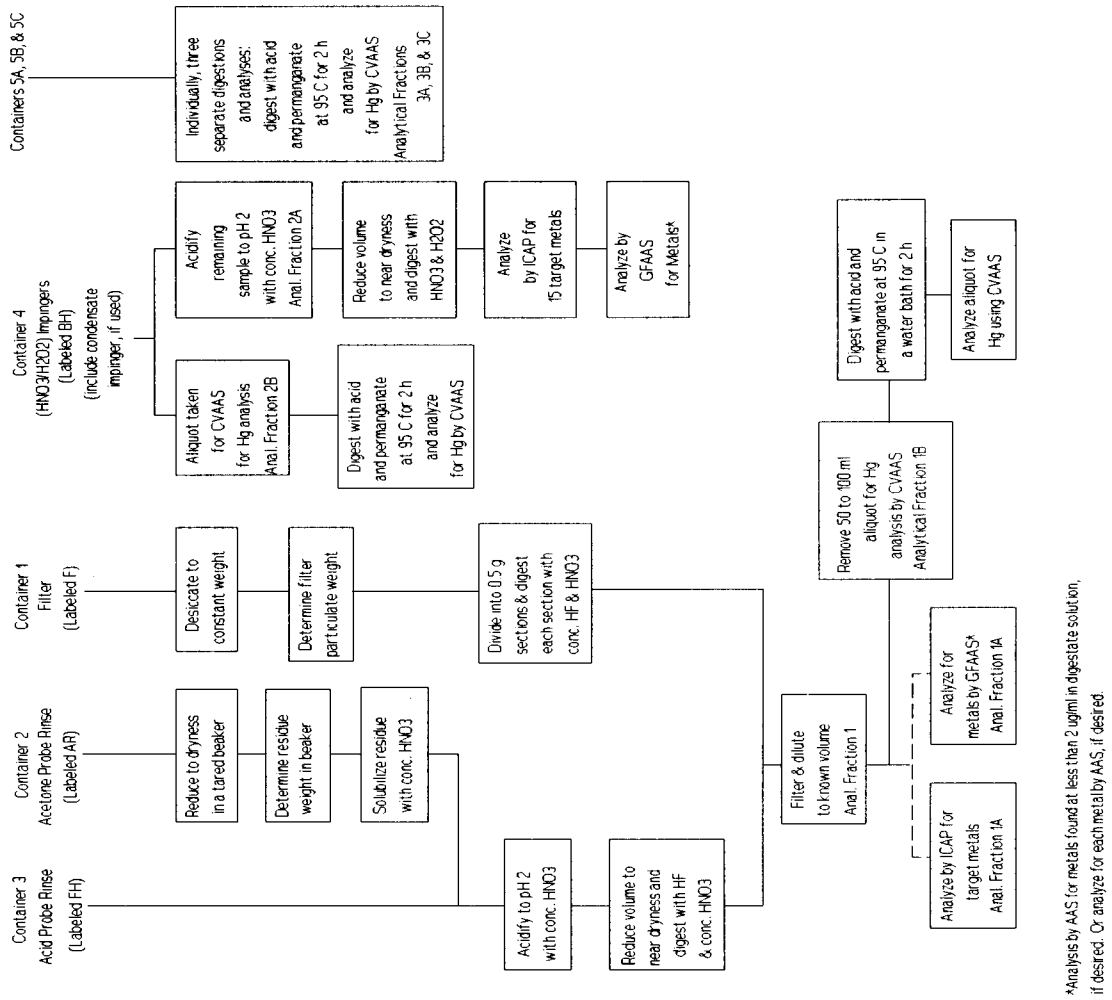

Figure 29-3. Sample preparation and analysis scheme.

BILLING CODE 6560–50–C

Quantitatively combine the resultant sample, including all liquid and any particulate matter, with Container No. 3 before beginning Section 5.3.3.

5.3.3 Container No. 3 (Probe Rinse). Verify that the pH of this sample is 2 or lower. If it is not, acidify the sample by careful addition with stirring of concentrated HNO_3 to pH 2. Use water to rinse the sample into a beaker, and cover the beaker with a ribbed watch glass. Reduce the sample volume to approximately 20 ml by heating on a hot plate at a temperature just below boiling. Digest the sample in microwave vessels or Parr[R] Bombs by quantitatively transferring the sample to the vessel or bomb, carefully adding the 6 ml of concentrated HNO_3, 4 ml of concentrated HF, and then continuing to follow the procedures described in Section 5.3.1.2. Then combine the resultant sample directly with the acid digested portions of the filter prepared previously in Section 5.3.1.2. The resultant combined sample is referred to as *''Sample Fraction 1''*. Filter the combined sample using Whatman 541 filter paper. Dilute to 300 ml (or the appropriate volume for the expected metals concentration) with water. This diluted sample is *''Analytical Fraction 1''*. Measure and record the volume of Analytical Fraction 1 to within 0.1 ml. Quantitatively remove a 50-ml aliquot and label as *''Analytical Fraction 1B''*. Label the remaining 250-ml portion as *''Analytical Fraction 1A''*. Analytical Fraction 1A is used for ICAP or AAS analysis for all desired metals except Hg. Analytical Fraction 1B is used for the determination of front-half Hg.

5.3.4 Container No. 4 (Impingers 1–3). Measure and record the total volume of this sample to within 0.5 ml and label it *''Sample Fraction 2''*. Remove a 75- to 100-ml aliquot for Hg analysis and label the aliquot *''Analytical Fraction 2B''*. Label the remaining portion of Container No. 4 as *''Sample Fraction 2A''*. Sample Fraction 2A defines the volume of Analytical Fraction 2A *prior* to digestion. All of Sample Fraction 2A is digested to produce *''Analytical Fraction 2A''*. Analytical Fraction 2A defines the volume of Sample Fraction 2A *after* its digestion and the volume of Analytical Fraction 2A is normally 150 ml. Analytical Fraction 2A is analyzed for all metals except Hg. Verify that the pH of Sample Fraction 2A is 2 or lower. If necessary, use concentrated HNO_3 by careful addition and stirring to lower Sample Fraction 2A to pH 2. Use water to rinse Sample Fraction 2A into a beaker and then cover the beaker with a ribbed watch glass. Reduce Sample Fraction 2A to approximately 20 ml by heating on a hot plate at a temperature just below boiling. Then follow either of the digestion procedures described in Sections 5.3.4.1 or 5.3.4.2.

5.3.4.1 Conventional Digestion Procedure. Add 30 ml of 50 percent HNO_3, and heat for 30 minutes on a hot plate to just below boiling. Add 10 ml of 3 percent H_2O_2 and heat for 10 more minutes. Add 50 ml of hot water, and heat the sample for an additional 20 minutes. Cool, filter the sample, and dilute to 150 ml (or the appropriate volume for the expected metals concentrations) with water. This dilution produces Analytical Fraction 2A. Measure and record the volume to within 0.1 ml.

5.3.4.2 Microwave Digestion Procedure. Add 10 ml of 50 percent HNO_3 and heat for 6 minutes total *heating* time in alternations of 1 to 2 minutes at 600 Watts followed by 1 to 2 minutes with no power, etc., similar to the procedure described in Section 5.3.1. Allow the sample to cool. Add 10 ml of 3 percent H_2O_2 and heat for 2 more minutes. Add 50 ml of hot water, and heat for an additional 5 minutes. Cool, filter the sample, and dilute to 150 ml (or the appropriate volume for the expected metals concentrations) with water. This dilution produces Analytical Fraction 2A. Measure and record the volume to within 0.1 ml.

(Note: All microwave heating times given are approximate and are dependent upon the number of samples being digested at a time. Heating times as given above have been found acceptable for simultaneous digestion of up to 12 individual samples. Sufficient heating is evidenced by solvent reflux within the vessel.)

5.3.5 Container No. 5A (Impinger 4), Container Nos. 5B and 5C (Impingers 5 and 6). Keep the samples in Containers Nos. 5A, 5B, and 5C separate from each other. Measure and record the volume of 5A to within 0.5 ml. Label the contents of Container No. 5A to be Analytical Fraction 3A. To remove any brown MnO_2 precipitate from the contents of Container No. 5B, filter its contents through Whatman 40 filter paper into a 500 ml volumetric flask and dilute to volume with water. Save the filter for digestion of the brown MnO_2 precipitate. Label the 500 ml filtrate from Container No. 5B to be Analytical Fraction 3B. Analyze Analytical Fraction 3B for Hg within 48 hours of the filtration step. Place the saved filter, which was used to remove the brown MnO_2 precipitate, into an appropriately sized *vented* container, which will allow release of any gases including chlorine formed when the filter is digested. In a laboratory hood which will remove any gas produced by the digestion of the MnO_2, add 25 ml of 8 N HCl to the filter and allow to digest for a minimum of 24 hours at room temperature. Filter the contents of Container No. 5C through a Whatman 40 filter into a 500-ml volumetric flask. Then filter the result of the digestion of the brown MnO_2 from Container No. 5B through a Whatman 40 filter into the same 500-ml volumetric flask, and dilute and mix well to volume with water. Discard the Whatman 40 filter. Mark this combined 500-ml dilute HCl solution as Analytical Fraction 3C.

5.3.6 Container No. 6 (Silica Gel). Weigh the spent silica gel (or silica gel plus impinger) to the nearest 0.5 g using a balance.

5.4 Sample Analysis. For each sampling train sample run, seven individual analytical samples are generated; two for all desired metals except Hg, and five for Hg. A schematic identifying each sample container and the prescribed analytical preparation and analysis scheme is shown in Figure 29–3. The first two analytical samples, labeled Analytical Fractions 1A and 1B, consist of the digested samples from the front-half of the train. Analytical Fraction 1A is for ICAP, ICP–MS or AAS analysis as described in Sections 5.4.1 and 5.4.2, respectively. Analytical Fraction 1B is for front-half Hg analysis as described in Section 5.4.3. The contents of the back-half of the train are used to prepare the third through seventh analytical samples. The third and fourth analytical samples, labeled Analytical Fractions 2A and 2B, contain the samples from the moisture removal impinger No. 1, if used, and $HNO_3H_2O_2$ impingers Nos. 2 and 3. Analytical Fraction 2A is for ICAP, ICP–MS or AAS analysis for target metals, except Hg. Analytical Fraction 2B is for analysis for Hg. The fifth through seventh analytical samples, labeled Analytical Fractions 3A, 3B, and 3C, consist of the impinger contents and rinses from the empty impinger No. 4 and the $H_2SO_4/KMnO_4$ Impingers Nos. 5 and 6. These analytical samples are for analysis for Hg as described in Section 5.4.3. The total back-half Hg catch is determined from the sum of Analytical Fractions 2B, 3A, 3B, and 3C. Analytical Fractions 1A and 2A can be combined proportionally prior to analysis.

5.4.1 ICAP and ICP–MS Analysis. Analyze Analytical Fractions 1A and 2A by ICAP using Method 6010 or Method 200.7 (40 CFR part 136, appendix C). Calibrate the ICAP, and set up an analysis program as described in Method 6010 or Method 200.7. Follow the quality control procedures described in Section 7.3.1. Recommended wavelengths for analysis are as follows:

Element	Wave-length (nm)
Aluminum	308.215
Antimony	206.833
Arsenic	193.696
Barium	455.403
Beryllium	313.042
Cadmium	226.502
Chromium	267.716
Cobalt	228.616
Copper	324.754
Iron	259.940
Lead	220.353
Manganese	257.610
Nickel	231.604
Phosphorous	214.914
Selenium	196.026
Silver	328.068
Thallium	190.864
Zinc	213.856

These wavelengths represent the best combination of specificity and potential detection limit. Other wavelengths may be substituted if they can provide the needed specificity and detection limit, and are treated with the same corrective techniques for spectral interference. Initially, analyze all samples for the target metals (except Hg) plus Fe and Al. If Fe and Al are present, the sample might have to be diluted so that each of these elements is at a concentration of less than 50 ppm so as to reduce their spectral interferences on As, Cd, Cr, and Pb. Perform ICP–MS analysis by following Method 6020 in EPA Publication SW–846 Third Edition (November 1986) including updates I, II, IIA, and IIB, as incorporated by reference in § 60.17(i).

(Note: When analyzing samples in a HF matrix, an alumina torch should be used;

since all front-half samples will contain HF, use an alumina torch.)

5.4.2. AAS by Direct Aspiration and/or GFAAS. If analysis of metals in Analytical Fractions 1A and 2A by using GFAAS or direct aspiration AAS is needed, use Table 29–2 to determine which techniques and procedures to apply for each target metal. Use Table 29–2, if necessary, to determine techniques for minimization of interferences. Calibrate the instrument according to Section 6.3 and follow the quality control procedures specified in Section 7.3.2.

TABLE 29–2.—APPLICABLE TECHNIQUES, METHODS AND MINIMIZATION OF INTERFERENCE FOR AAS ANALYSIS

Metal	Technique	SW–846 [1] method No.	Wavelength (nm)	Interferences	
				Cause	Minimization
Fe	Aspiration	7380	248.3	Contamination	Great care taken to avoid contamination.
Pb	Aspiration	7420	283.3	217.0 nm alternate	Background correction required.
Pb	Furnace	7421	283.3	Poor recoveries	Matrix modifier, add 10 ul of phosphorus acid to 1 ml of prepared sample in sampler cup.
Mn	Aspiration	7460	279.5	403.1 nm alternate	Background correction required.
Ni	Aspiration	7520	232.0	352.4 nm alternate Fe, Co, and Cr.	Background correction required. Matrix matching or nitrous-oxide/acetylene flame.
				Nonlinear response	sample dilution or use 352.3 nm line.
Se	Furnace	7740	196.0	Volatility	Spike samples and reference materials and add nickel nitrate to minimize volatilization.
				Adsorption & scatter	Background correction is required and Zeeman background correction can be useful.
Ag	Aspiration	7760	328.1	Adsorption & Scatter AgCl insoluble.	Background correction is required. Avoid Hydrochloric acid unless silver is in solution as a chloride complex Sample and standards monitored for aspiration rate.
Tl	Aspiration	7840	276.8		Background correction is required. Hydrochloric acid should not be used.
Tl	Furnace	7841	276.8	Hydrochloric acid or chloride	Background correction is required. Verify that losses are not occurring for volatization by spiked samples or standard addition; Palladium is a suitable matrix modifier.
Zn	Aspiration	7950	213.9	High Si, Cu, & P Contamination	Strontium removes Cu and phosphate, Great care taken to avoid contamination.
Sb	Aspiration	7040	217.6	1000 mg/ml Pb Ni, Cu, or acid	Use secondary wavelengths of 231.1.nm; match sample & standards acid concentration or use nitrous oxidefacetylene flame.
Sb	Furnace	7041	217.6	High Pb	Secondary Wavelength or Zeeman correction.
As	Furnace	7060	193.7	Arsenic volatilization Aluminum	Spiked samples and add nickel nitrate solution to digestates prior to analysis. Use Zeeman background correction.
Ba	Aspiration 7080	7080	553.6	Calcium Barium ionization	High hollow cathode current and narrow band set. 2 ml of KCl per 100 ml of sample.
Be	Aspiration	7090	234.9	500 ppm Al High Mg and Si	Add 0.1% fluoride. Use method of standard additions.
Be	Furnace	7091	234.9	Be in optical path	Optimize parameters to minimize effects.
Cd	Aspiration	7130	228.8	Absorption and light scattering	Background correction is required.

TABLE 29–2.—APPLICABLE TECHNIQUES, METHODS AND MINIMIZATION OF INTERFERENCE FOR AAS ANALYSIS—Continued

Metal	Technique	SW–846 [1] method No.	Wavelength (nm)	Interferences	
				Cause	Minimization
Cd	Furnace	7131	228.8	As above Excess Chloride Pipet tips	As above. Ammonium phosphate used as a matrix modifier. Use cadmiun-free tips.
Cr	Aspiration	7190	357.9	Akali metal	KCl ionization suppressant in samples and standards—Consult mfgs literature.
Co	Furnace	7201	240.7	Excess chloride	Use Method of Standard Additions.
Cr	Furnace	7191	357.9	200 mg/L Ca and P	All calcium nitrate for a known constant effect and to eliminate effect of phosphate.
Cu	Aspiration	7210	324.7	Absorption & scatter	Consult manufacturer's manual.

[1] Refer to EPA publication SW–846 Third Edition (November 1986) including updates I, II, IIA, and IIB, as incorporated by reference in § 60.17(i).

5.4.3 CVAAS Hg analysis. Analyze Analytical Fractions 1B, 2B, 3A, 3B, and 3C separately for Hg using CVAAS following the method outlined in Method 7470 in EPA Publication SW–846 Third Edition (November 1986) including updates I, II, IIA and IIB, as incorporated by reference in § 60.17(i) or in *Standard Methods for the Examination of Water and Wastewater,* 16th Edition, (1985), Method 303F, as incorporated by reference in § 60.17, or, optionally using *NOTE No. 2* in this section. Set up the calibration curve (zero to 1000 ng) as described in Method 7470 or similar to Method 303F using 300-ml BOD bottles instead of Erlenmeyers. Perform the following for each Hg analysis. From each original sample, select and record an aliquot in the size range from 1 ml to 10 ml. If no prior knowledge of the expected amount of Hg in the sample exists, a 5 ml aliquot is suggested for the first dilution to 100 ml (see *NOTE No. 1* in this Section). The total amount of Hg in the aliquot shall be less than 1 µg and within the range (zero to 1000 ng) of the calibration curve. Place the sample aliquot into a separate 300-ml BOD bottle, and add enough water to make a total volume of 100 ml. Next add to it sequentially the sample digestion solutions and perform the sample preparation described in the procedures of Method 7470 or Method 303F. (See *NOTE No. 2* in this Section). If the maximum readings are off-scale (because Hg in the aliquot exceeded the calibration range; including the situation where only a 1-ml aliquot of the original sample was digested), then dilute the original sample (or a portion of it) with 0.15 percent HNO_3 (1.5 ml concentrated HNO_3 per liter aqueous solution) so that when a 1- to 10-ml aliquot of the ''0.15 HNO_3 percent dilution of the original sample'' is digested and analyzed by the procedures described above, it will yield an analysis within the range of the calibration curve.

Note No. 1 to Section 5.4.3. When Hg levels in the sample fractions are below the in-stack detection limit given in Table 29–1, select a 10 ml aliquot for digestion and analysis as described.

Note No. 2 to Section 5.4.3. Optionally, Hg can be analyzed by using the CVAAS analytical procedures given by some instrument manufacturer's directions. These include calibration and quality control procedures for the Leeman Model PS200, the Perkin Elmer FIAS systems, and similar models, if available, of other instrument manufacturers. For digestion and analyses by these instruments, perform the following two steps:

(1) Digest the sample aliquot through the addition of the aqueous hydroxylamine hydrochloride/sodium chloride solution the same as described in this Section 5.4.3.: (*The Leeman, Perkin Elmer, and similar instruments described in this note add automatically the necessary stannous chloride solution during the automated analysis of Hg.)* and

(2) Upon completion of the digestion described in paragraph (1), of this note, analyze the sample according to the instrument manufacturer's directions. This approach allows multiple (including duplicate) automated analyses of a digested sample aliquot.

6. Calibration

Maintain a laboratory log of all calibrations.

6.1 Sampling Train Calibration. Calibrate the sampling train components according to the indicated sections of Method 5: Probe Nozzle (Section 5.1); Pitot Tube (Section 5.2); Metering System (Section 5.3); Probe Heater (Section 5.4); Temperature Gauges (Section 5.5); Leake-Check of the Metering System (Section 5.6); and Barometer (Section 5.7).

6.2 Industively Coupled Argon Plasma Spectrometer Calibration. Prepare standards as outlined in Section 4.5. Profile and calibrate the instrument according to the manufacturer's recommended procedures using those standards. Check the calibration once per hour. If the instrument does not reproduce the standard concentrations within 10 percent, perform the complete calibration procedures. Perform ICP–MS analysis by following Method 6020 in EPA Publication SW–846 Third Edition (November 1986) including updates I, II, IIA and IIB, as incorporated by reference in § 60.17(i).

6.3 Atomic Absorption Spectrometer—Direct Aspiration AAS, GFAAS, and CVAAS analyses. Prepare the standards as outlined in Section 4.5 and use them to calibrate the spectrometer. Calibration procedures are also outlined in the EPA methods referred to in Table 29–2 and in Method 7470 in EPA Publication SW–846 Third Edition (November 1986) including updates I, II, IIA and IIB, as incorporated by reference in § 60.17(i) or in *Standard Methods for the Examination of Water and Wastewater,* 16th Edition, (1985), Method 303F (for Hg) as incorporated by reference in § 60.17. Run each standard curve in duplicate and use the mean values to calculate the calibration line. Recalibrate the instrument approximately once every 10 to 12 samples.

7. Quality Control

7.1 Field Reagent Blanks, if analyzed. Perform the digestion and analysis of the blanks in Container Nos. 7 through 12 that were produced in Sections 5.2.11 through 5.2.17, respectively. For Hg field reagent blanks, use a 10 ml aliquot for digestion and analysis.

7.1.1 Digest and analyze one of the filters from Container No. 12 per Section 5.3.1, 100 ml from Container No. 7 per Section 5.3.2, and 100 ml from Container No. 8A per Section 5.3.3. This step produces blanks for Analytical Fractions 1A and 1B.

7.1.2 Combine 100 ml of Container No. 8A with 200 ml from Container No. 9, and digest and analyze the resultant volume per Section 5.3.4. This step produces blanks for Analytical Fractions 2A and 2B.

7.1.3 Digest and analyze a 100-ml portion of Container No. 8A to produce a blank for Analytical Fraction 3A.

7.1.4 Combine 100 ml from Container No. 10 with 33 ml from Container No. 8B to produce a blank for Analytical Fraction 3B. Filter the resultant 133 ml as described for Container No. 5B in Section 5.3.5, except do not dilute the 133ml. Analyze this blank for Hg within 48 hrs. of the filtration step, and use 400 ml as the blank volume when calculating the blank mass value. Use the

actual volumes of the other analytical blanks when calculating their mass values.

7.1.5 Digest the filter that was used to remove any brown MnO_2 precipitate from the blank for Analytical Fraction 3B by the same procedure as described in Section 5.3.5 for the similar sample filter. Filter the digestate and the contents of Container No. 11 through Whatman 40 paper into a 500-ml volumetric flask, and dilute to volume with water. These steps produce a blank for Analytical Fraction 3C.

7.1.6 Analyze the blanks for Analytical Fraction Blanks 1A and 2A per Section 5.4.1 and/or Section 5.4.2. Analyze the blanks for Analytical Fractions 1B, 2B, 3A, 3B, and 3C per Section 5.4.3. Analysis of the blank for Analytical Fraction 1A produces the front-half reagent blank correction values for the desired metals except for Hg; Analysis of the blank for Analytical Fraction 1B produces the front-half reagent blank correction value for Hg. Analysis of the blank for Analytical Fraction 2A produces the back-half reagent blank correction values for all of the desired metals except for Hg, while separate analyses of the blanks for Analytical Fractions 2B, 3A, 3B, and 3C produce the back-half reagent blank correction value for Hg.

7.2 Quality Control Samples. Analyze the following quality control samples.

7.2.1 ICAP and ICP–MS Analysis. Follow the respective quality control descriptions in Section 8 of Methods 6010 and 6020 of EPA Publication SW–846 Third Edition (November 1986) including updates I, II, IIA and IIB, as incorporated by reference in § 60.17(i). For the purposes of a source test that consists of three sample runs, modify those requirements to include the following: two instrument check standard runs, two calibration blank runs, one interference check sample at the beginning of the analysis (analyze by Method of Standard Additions unless within 25 percent), one quality control sample to check the accuracy of the calibration standards (required to be within 25 percent of calibration), and one duplicate analysis (required to be within 20 percent of average or repeat all analyses).

7.2.2. Direct Aspiration AAS and/or GFAAS Analysis for Sb, As, Ba, Be, Cd, Cu, Cr, Co, Pb, Ni, Mn, Hg, P, Se, Ag, Tl, and Zn. Analyze all samples in duplicate. Perform a matrix spike on at least one front-half sample and one back-half sample, or one combined sample. If recoveries of less than 75 percent or greater than 125 percent are obtained for the matrix spike, analyze each sample by the Method of Standard Additions. Analyze a quality control sample to check the accuracy of the calibration standards. If the results are not within 20 percent, repeat the calibration.

7.2.3 CVAAS Analysis for Hg. Analyze all samples in duplicate. Analyze a quality control sample to check the accuracy of the calibration standards (if not within 15 percent, repeat calibration). Perform a matrix spike on one sample (if not within 25 percent, analyze all samples by the Method of Standard Additions). Additional information on quality control can be obtained from Method 7470 of EPA Publication SW–846 Third Edition (November 1986) including updates I, II, IIA and IIB, as incorporated by reference in § 60.17(i) or in *Standard Methods for the Examination of Water and Wastewater*, 16th Edition, (1985), Method 303F as incorporated by reference in § 60.17.

8. Calculations

8.1 Dry Gas Volume. Using the data from this test, calculate $V_{m(std)}$, the dry gas sample volume at standard conditions as outlined in Section 6.3 of Method 5.

8.2 Volume of Water Vapor and Moisture Content. Using the total volume of condensate collected during the source sampling, calculate the volume of water vapor $V_{w(std)}$ and the moisture content B_{ws} of the stack gas. Use Equations 5–2 and 5–3 of Method 5.

8.3 Stack Gas Velocity. Using the data from this test and Equation 2–9 of Method 2, calculate the average stack gas velocity.

8.4 Metals (Except Hg) in Source Sample.

8.4.1 Analytical Fraction 1A, Front-Half, Metals (except Hg). Calculate separately the amount of each metal collected in Sample Fraction 1 of the sampling train using the following equation:

$$M_{fh}=C_{a1}\ F_d\ V_{soln,1} \qquad \text{Eq. 29–1}$$

where:

M_{fh}=Total mass of each metal (except Hg) collected in the front half of the sampling train (Sample Fraction 1), µg.

C_{a1}=Concentration of metal in Analytical Fraction 1A as read from the standard curve, µg/ml.

F_d=Dilution factor (F_d = the inverse of the fractional portion of the concentrated sample in the solution actually used in the instrument to produce the reading C_{a1}. For example, if a 2 ml aliquot of Analytical Fraction 1A is diluted to 10 ml to place it in the calibration range, F_d = 5).

$V_{soln,1}$=Total volume of digested sample solution (Analytical Fraction 1), ml.

8.4.1.1 If Analytical Fractions 1A and 2A are combined, use proportional aliquots. Then make appropriate changes in Equations 29–1 through 29–3 to reflect this approach.

8.4.2 Analytical Fraction 2A, Back-Half, Metals (except Hg). Calculate separately the amount of each metal collected in Fraction 2 of the sampling train using the following equation.

$$M_{bh}=C_{a2}\ F_a\ V_a \qquad \text{Eq. 29–2}$$

where:

M_{bh}=Total mass of each metal (except Hg) collected in the back-half of the sampling train (Sample Fraction 2), µg.

C_{a2}=Concentration of metal in Analytical Fraction 2A as read from the standard curve, (µg/ml).

F_a=Aliquot factor, volume of Sample Fraction 2 divided by volume of Sample Fraction 2A (*see Section 5.3.4.*)

V_a=Total volume of digested sample solution (Analytical Fraction 2A), ml (see Section 5.3.4.1 or 5.3.4.2, as applicable).

8.4.3 Total Train, Metals (except Hg). Calculate the total amount of each of the quantified metals collected in the sampling train as follows:

$$M_t=(M_{fh} - M_{fhb}) + (M_{bh} - M_{bhb}) \qquad \text{Eq. 29–3}$$

where:

M_t=Total mass of each metal (separately stated for each metal) collected in the sampling train, µg.

M_{fhb}=Blank correction value for mass of metal detected in front-half field reagent blank, µg.

M_{bhb}=Blank correction value for mass of metal detected in back-half field reagent blank, µg.

8.4.3.1 If the measured blank value for the front half (M_{fhb}) is in the range 0.0 to ''A'' µg [where ''A'' µg equals the value determined by multiplying 1.4 µg/in.^{2} times the actual area in in.^{2} of the sample filter], use M_{fhb} to correct the emission sample value (M_{fh}); if M_{fhb} exceeds ''A'' µg, use the greater of I or II:

I. ''A'' µg.

II. the lesser of (a) M_{fhb}, or (b) 5 percent of M_{fh}.

If the measured blank value for the black-half (M_{bhb}) is in the range 0.0 to 1 µg, use M_{bhb} to correct the emission sample value (M_{bh}); if M_{bhb}) exceeds 1 µg, use the greater of I or II:

I. 1 µg.

II. the lesser of (a) M_{bhb} or (b) 5 percent of M_{bh}.

8.5 Hg in Source Sample.

8.5.1 Analytical Fraction 1B; Front-Half Hg. Calculate the amount of Hg collected in the front-half, Sample Fraction 1, of the sampling train by using Equation 29–4:

$$Hg_{fh} = \frac{Q_{fh}}{V_{f1B}}\left(V_{soln,1}\right) \qquad \text{Eq. 29 – 4}$$

where:

Hg_{fh}=Total mass of Hg collected in the front-half of the sampling train (Sample Fraction 1), µg.

Q_{fh}=Quantity of Hg, µg, *TOTAL in the ALIQUOT of Analytical Fraction 1B selected for digestion and analysis.*

8.5.1.1 For example, if a 10 ml aliquot of Analytical Fraction 1B is taken and digested and analyzed (according to Section 5.4.3 and its NOTES Nos. 1 and 2), then calculate and use the total amount of Hg in the 10 ml aliquot for Q_{fh}.

$V_{soln,1}$=Total volume of Analytical Fraction 1, ml.

V_{f1B}=Volume of aliquot of Analytical Fraction 1B analyzed, ml.

8.5.1.2 For example, if a 1 ml aliquot of Analytical Fraction 1B was diluted to 50 ml with 0.15 percent HNO_3 as described in Section 5.4.3 to bring it into the proper analytical range, and then 1 ml of that 50-ml wa digested according to Section 5.4.3 and analyzed, V_{f1B} would be 0.02 ml.

8.5.2 Analytical Fractions 2B, 3A, 3B, and 3C; Back Half Hg.

8.5.2.1 Calculate the amount of Hg collected in Sample Fraction 2 by using Equation 29–5:

$$Hg_{bh2} = \frac{Q_{bh2}}{V_{f2B}}\left(V_{soln,2}\right) \qquad \text{Eq. 29 – 5}$$

where:

Hg_{bh2}=Total mass of Hg collected in Sample Fraction 2, µg.

Q_{bh2}=Quantity of Hg, µg, *TOTAL in the ALIQUOT of Analytical Fraction 2B selected for digestion and analysis.*

8.5.2.1.1 For example, if a 10 ml aliquot of Analytical Fraction 2B is taken and digested and analyzed (according to Section 5.4.3 and its NOTES Nos. 1 and 2), then calculate and use the total amount of Hg in the 10 ml aliquot for Q_{bh2}.

$V_{soln,2}$=Total volume of Sample Fraction 2, ml.

V_{f2B}=Volume of Analytical Fraction 2B analyzed, ml.

8.5.2.1.2 For example, if 1 ml of Analytical Fraction 2B was diluted to 10 ml with 0.15 percent HNO_3 as described in Section 5.4.3 to bring it into the proper analytical range, and then 5 ml of that 10-ml was analyzed, V_{f2B} would be 0.5 ml.

8.5.2.2 Calculate each of the back-half Hg values for Analytical Fractions 3A, 3B, and 3C by using Equation 29–6:

$$Hg_{bh3(A,B,C)} = \frac{Q_{bh3(A,B,C)}}{V_{f3(A,B,C)}}\left(V_{soln,3(A,B,C)}\right) \quad \text{Eq. } 29-6$$

where:

$Hg_{bh3\ (A,B,C)}$=Total mass of Hg collected separately in Fraction 3A, 3B, or 3C, µg.

$Q_{bh3\ (A,B,C)}$=Quantity of Hg, µg, *TOTAL, separately, in the ALIQUOT of Analytical Fraction 3A, 3B, and 3C selected for digestion and analysis,* (see previous notes in Sections 8.5.1 and 8.5.2 describing the quantity ''Q'' and calculate similarly).

$V_{f3\ (A,B,C)}$=Volume, separately, of Analytical Fraction 3A, 3B, or 3C analyzed, ml (see previous notes in Sections 8.5.1 and 8.5.2, describing the quantity ''V'' and calculate similarly).

$V_{soln,\ 3\ (A,B,C)}$=Total volume, separately, of Analytical Fraction 3A, 3B, or 3C, ml.

8.5.2.3 Calculate the total amount of Hg collected in the back-half of the sampling train by using Equation 29–7:

$$Hg_{bh}=Hg_{bh2}+Hg_{bh3A}+Hg_{bh3B}+Hg_{bh3C} \quad \text{Eq. } 29-7$$

where:

Hg_{bh}=Total mass of Hg collected in the back-half of the sampling train, µg.

8.5.3 Total Train Hg Catch. Calculate the total amount of Hg collected in the sampling train by using Equation 29–8:

$$Hg_t=(Hg_{fh}-Hg_{fhb})+(Hg_{bh}-Hg_{bhb}) \quad \text{Eq. } 29-8$$

where:

Hg_t=Total mass of Hg collected in the sampling train, µg.

Hg_{fhb}=Blank correction value for mass of Hg detected in front-half field reagent blank, µg.

Hg_{bhb}=Blank correction value for mass of Hg detected in back-half field reagent blanks, µg.

8.5.4 If the total of the measured blank values ($Hg_{fhb}+Hg_{bhb}$) is in the range of 0.0 to 0.6 µg, then use the total to correct the sample value ($Hg_{fh}+Hg_{bh}$); if it exceeds 0.6 µg, use the greater of I. or II:

I. 0.6 µg.

II. the lesser of (a) ($Hg_{fhb}+Hg_{bhb}$), or (b) 5 percent of the sample value ($Hg_{fh}+Hg_{bh}$).

8.6 Individual Metal Concentrations in Stack Gas. Calculate the concentration of each metal in the stack gas (dry basis, adjusted to standard conditions) by using Equation 29–9:

$$C_s = \frac{K_4 M_t}{V_{m(std)}} \quad \text{Eq. } 29-9$$

C_s=Concentration of a metal in the stack gas, mg/dscm.

$K_4=10^{-3}$ mg/µg.

M_t=Total mass of that metal collected in the sampling train, µg; (substitute Hg_t for M_t for the Hg calculation).

$V_{m(std)}$=Volume of gas sample as measured by the dry gas meter, corrected to dry standard conditions, dscm.

8.7 Isokinetic Variation and Acceptable Results. Same as Method 5, Sections 6.11 and 6.12, respectively.

9. Bibliography

1. Method 303F in *Standard Methods for the Examination of Water Wastewater,* 16th Edition, 1985. Available from the American Pubic Health Association, 1015 18th Street NW., Washington, DC 20036.

2. EPA Methods 6010, 6020, 7000, 7041, 7060, 7131, 7421, 7470, 7740, and 7841, *Tesdt Methods for Evaluating Solid Waste: Physical/Chemical Methods.* SW–846, Third Edition, September 1986, with updates I, II, IIA and IIB. Office of Solid Waste and Emergency Response, U.S. Environmental Protection Agency, Washington, DC 20460.

3. EPA Method 200.7, *Code of Federal Regulations*, Title 40, Part 136, Appendix C. July 1, 1987.

4. EPA Methods 1 through 5, *Code of Federal Regulations*, Title 40, Part 60, Appendix A. July 1, 1991.

5. EPA Method 101A, *Code of Federal Regulations*, Title 40, Part 61, Appendix B. July 1, 1991.

PART 61—[AMENDED]

3. The authority citation for part 61 continues to read as follows:

Authority: 42 U.S.C. 7401, 7412, 7414, 7416, and 7601.

4. In part 61, Method 101A of appendix B, by revising the heading, Sections 6.1.5, 7.2.1, 7.2.3, 7.2.5, 7.3.1., 7.3.2, 7.3.3, and 9.2; and by adding sections 5.2.4 through 5.2.7, 6.1.7, 6.1.8, 7.2.1.1 through 7.2.1.3, 7.2.6, 9.2.1, 9.2.2 and reference 3 of item 10 bibliograph; and by adding text to the end of section 6.1.6 to read as follows:

Appendix B—Test Methods

* * * * *

Method 101A—Determination of Particulate and Gaseous Mercury Emissions From Stationary Sources

* * * * *

5.2.4 Atomic Absorption Spectrophotometer or Equivalent. Any atomic absorption unit with an open sample presentation area in which to mount the optical cell is suitable. Use those instrument settings recommended by the particular manufacturer. Instruments designed specifically for the measurement of mercury using the cold-vapor technique are commercially available and may be substituted for the atomic absorption spectrophotometer.

5.2.5 Optical Cell. Alternatively, a heat lamp mounted above the cell or a moisture trap installed upstream of the cell may be used.

5.2.6 Aeration Cell. Alternatively, aeration cells available with commercial cold vapor instrumentation may be used.

5.2.7 Aeration Gas Cylinder. Nitrogen, argon, or dry, Hg-free air, equipped with a single-stage regulator. Alternatively, aeration may be provided by a peristaltic metering pump. If a commercial cold vapor instrument is used, follow the manufacturer's recommendations.

* * * * *

6.1.5 Sulfuric Acid (H_2SO_4), 10 Percent (V/V). Carefully add and mix 100 ml of concentrated H_2SO_4 to 800 ml of deionized distilled water. Then, by adding deionized distilled water, mix and bring to a final volume of 1000 ml.

6.1.6 * * *

Precaution: To prevent autocatalytic decomposition of the permanganate solution, filter the solution through Whatman 541 filter paper. Also, due to the potential reaction of the potassium permanganate with the acid, there could be pressure buildup in the solution storage bottle; therefore these bottles shall not be fully filled and shall be vented to relieve excess pressure and prevent explosive potentials. Venting is required, but should not allow contamination of the solution; a No. 70–72 hole drilled in the container cap and Teflon liner has been used.

6.1.7 Hydrochloric Acid (HCL). Concentrated. Trace-metals grade is recommended. The Hg level shall be less than 3 ng/ml.

6.1.8 HCL, 8 N. Dilute 67 ml of concentrated HCl to 100 ml with water (slowly add the HCl to the water).

* * * * *

7.2.1 Container No. 1 (Impinger, Probe, and Filter Holder) and, if applicable, No. 1A (HCl rinse).

7.2.1.1 Using a graduated cylinder, measure the liquid in the first three

impingers to within 1 ml. Record the volume of liquid present (e.g., see Figure 5–3 of Method 5 in 40 CFR Part 60). This information is required to calculate the moisture content of the effluent gas. (Use only graduated cylinder and glass storage bottles that have been precleaned as in Section 7.1.2.) Place the contents of the first three impingers into a 1000-ml glass sample bottle labeled Container No. 1. See the *Precaution* in Section 6.1.6.

Note No. 1 to Section 7.2.1.1: Due to the potential reaction of $KMnO_4$ with acid, there could be pressure buildup in the sample storage bottles. These bottles shall not be filled completely and shall be vented to relieve excess pressure. A No. 70–72 hole drilled in the container cap and Teflon liner has been used successfully).

Note No. 2 to Section 7.2.1.1: If a filter is used in the sampling train, remove the filter from its holder as outlined under ''Container No. 3'' below.)

7.2.1.2 Taking care that dust on the outside of the probe or other exterior surfaces does not get into the sample, quantitatively recover the Hg (and any condensate) from the probe nozzle, probe fitting, probe liner, front half of the filter holder (if applicable), and impingers as follows: Rinse these components with a total of 250 to 400 ml of fresh acidified 4 percent $KMnO_4$ solution carefully assuring removal of all loose particulate matter from the impingers; add all washings to Container No. 1. See the *Precaution* in Section 6.1.6 and see the *Note No. 1* in Section 7.2.1.1. To remove any residual brown deposits on the glassware following the permanganate rinse, rinse with approximately 100 ml of water carefully assuring removal of all loose particulate matter from the impingers, and add this rinse to Container No. 1. If no visible deposits remain after this water rinse, do not rinse with 8 N HCl. However, if deposits do remain on the glassware after the water rinse, wash the impinger walls and stems with a total of only 25 ml of 8 N HCl as follows; turn and shake the impingers so that the 8 N HCl contacts all inside surfaces (wash the first impinger, then pour the wash from the first impinger into the second impinger, and finally pour the wash from the second into the third). DO NOT PLACE THE HCl WASH INTO THE ACIDIFIED PERMANGANATE SOLUTION. Place the HCl wash into a separate container labeled Container No. 1A as follows: place 150 ml of water in an empty sample container labeled Container No. 1A. Pour the HCl wash carefully, with stirring, into Container No. 1A. Rinse the impinger walls and stem with a total of 50 ml of water, and place this rinse into Container No. 1A.

7.2.1.3 After all washings have been collected in the sample containers, prepare as described above to prevent leakage during shipment to the laboratory. Mark the height of the fluid level to determine whether leakage occurs during transport. Label the containers to identify their contents clearly.

7.2.3 Container No, 3 (Filter). If a filter was used, carefully remove it from the filter holder, place it into a 100 ml glass sample container, and add 20 to 40 ml of acidified $KMnO_4$. If it is necessary to fold the filter, be sure that the particulate cake is inside the fold. Carefully transfer to the 100 ml sample bottle any particulate matter and filter fibers that might adhere to the filter holder gasket by using a dry Nylon bristle brush and a sharp edged blade. See the *Precaution* in Section 6.1.6 and see the *Note No. 1* in Section 7.2.1.1. Label the container to clearly identify its contents. Mark the height of the fluid level to determine whether leakage occurs during transport.

* * * * *

7.2.5 Container No, 5 (Absorbing Solution Blank). For a blank, place 500 ml of acidified absorbing solution in a 1000 ml sample bottle. See the *Precaution* in Section 6.1.6 and see the *Note No. 1* in Section 7.2.1.1.

7.2.6 Container No. 6 (HCl rinse blank). For a blank, place 200 ml of water in a 1000-ml sample bottle, and add 25 ml of 8 N HCl carefully with stirring. Seal the container. Only one blank sample per 3 runs is required.

* * * * *

7.3.1 Containers No. 3 and No. 4 (Filter and Filter Blank). If a filter is used, place the contents, including the filter, of Containers No. 3 and 4 in separate 250-ml beakers, and heat the beakers on a steam bath until most of the liquid has evaporated. Do not take to dryness. Add 20 ml of concentrated HNO_3 to the beakers, cover them with a watch glass, and heat on a hot plate at 70 °C for 2 hours. Remove from the hot plate. Filter the solution from digestion of the Container No. 3 contents through Whatman No. 40 filter paper, and save the filtrate for addition to the Container No. 1 filtrate as described in Section 7.3.2. Discard the filter. Filter the solution from the digestion of the Container No. 4 contents through Whatman No. 40 filter paper, and save the filtrate for addition to Container No. 5 filtrate as described in Section 7.3.3. Discard the filter.

7.3.2 Container No. 1 (Impingers, Probe, and Filter Holder) and, if applicable, No. 1A (HCl rinse). Filter the contents of Container No. 1 through Whatman 40 filter paper into a 1-liter volumetric flask to remove the brown MnO_2 precipitate. Save the filter for digestion of the brown MnO_2 precipitate. Add the sample filtrate from Container No. 3 to the 1-liter volumetric flask, and dilute to volume with water. If the combined filtrates are greater than 1000 ml, determine the volume to the nearest ml and make the appropriate corrections for blank subtractions. Mix thoroughly. Mark the combined filtrates as ANALYSIS SAMPLE No. A.1. and analyze for Hg within 48 hr of the filtration step (Note: Do not confuse ANALYSIS SAMPLE No. A.1. with the contents of field Sample Container No. 1A which contains the 8 N HCl wash). Place the saved filter, which was used to remove the brown MnO_2 precipitate, into an appropriate sized *vented* container, which will allow release of any gases including chlorine formed when the filter is digested. In a laboratory hood which will remove any gas produced by the digestion of the MnO_2, add 25 ml of 8 N HCl to the filter and allow to digest for a minimum of 24 hours at room temperature. Filter the contents of Container 1A through Whatman 40 paper into a 500-ml volumetric flask. Then filter the result of the digestion of the brown MnO_2 from Container No. 1 through Whatman 40 filter into the same 500-ml volumetric flask, and dilute and mix well to volume with water. Discard the filter. Mark this combined 500-ml dilute solution as ANALYSIS SAMPLE No. HCL A.2., and analyze for Hg.

7.3.3 Container No. 5 (Absorbing Solution Blank) and No. 6 (HCl Rinse Blank). Prepare the contents of Container No. 5 for analysis by the same procedure used for Container No. 1 as described in Section 7.3.2. Add the filter blank filtrate from Container No. 4 to the 1-liter volumetric flask, and dilute to volume. Mix thoroughly. Mark this as ANALYSIS SAMPLE No. A.1. BLANK, and analyze for Hg within 48 hours of the filtration step. Digest any brown precipitate remaining on the filter from the filtration of Container No. 5 by the same procedure as described in Section 7.3.2. Filter the contents of Container No. 6 by the same procedure as described in Section 7.3.2, and combine in the 500-ml volumetric flask with the filtrate from the digested blank MnO_2 precipitate. Mark this resultant 500-ml combined dilute solution as ANALYSIS SAMPLE No. HCl A.2 blank. (Note: When analyzing samples A.1 blank and HCl A.2 blank, always begin with 10-ml aliquots. This applies specifically to blank samples.)

* * * * *

9. * * *

9.2 Total Mercury. For each source sample, correct the average maximum absorbance of the two consecutive samples whose peak heights agree within 3 percent of their average for the contribution of the blank. Then calculate the total Hg content in µg in each sample. Correct for any dilutions made to bring the sample into the working range of the spectrophotometer.

$$m_{(HC1)Hg} = \left[\frac{\left[C_{(HC1)Hg}\ D.F._{(HC1)Hg}\right]}{S} - \frac{\left[C_{(HC1\,blk)Hg}\ D.F._{(HC1\,blk)Hg}\right]}{S_{blk}} \right] V_{f(HC1)} \left(10^{-3}\right) \quad \text{Eq. 101A} - 1$$

where:

$m_{(HCl)\ Hg}$=Total blank corrected µg of Hg in HCl rinse and HCl digestate of filter sample

$C_{(HCl)\ Hg}$=Total ng of Hg analyzed in the aliquot from the 500-ml ANALYSIS SAMPLE No. HCl A.2.

$C_{(HCl\ blk)\ Hg}$=Total ng of Hg analyzed in aliquot of the 500-ml ANALYSIS SAMPLE No. HCl A.2 blank.

$D.F._{(HCl)\ Hg}$=Dilution factor for the HCl-digested Hg-containing solution, ANALYSIS SAMPLE No. ''HCl A.2.'' This dilution factor applies only to the dilution steps, if necessary, of the 500 ml of the original sample volume [$V_{f\ (HCl)}$] of ''HCl A.2'' because the original volume has been factored out in the equation along with the sample aliquot (S). In Eq. 101A–1, the sample aliquot, S, is digested according to Sections 7.4, 8.1, and 8.2 and the Hg from this digestion is introduced directly into the aeration cell for analysis. A dilution factor is required only if it is necessary to bring the sample into the analytical instrument's calibration range. If no dilution is necessary, then $D.F._{(HCl)\ Hg}$ equals 1.0.

D.F. (HCl blk)Hg=Dilution factor for the HCl-digested Hg-containing solution, ANALYSIS SAMPLE No. ''HCl A.2 blank.'' (Refer to sample No. ''HCl A.2'' dilution factor information above.)

$V_{f(HCl)}$=Solution volume of original sample, 500 ml for the HCl samples diluted as described in Section 7.3.

10^{-3}=Conversion factor µg/ng.

S=Aliquot volume of sample: digested according to Sections 7.4, 8.1, 8.2 and the Hg from this digestion is introduced directly into the aeration cell for analysis, ml.

S_{blk}=Aliquot volume of blank: digested according to Sections 7.4, 8.1, and 8.2 and the Hg from this digestion is introduced directly into the aeration cell for analysis, ml.

9.2.1 The maximum allowable blank subtraction for the Hg in the HCl washes is the lesser of the two following values: (1) the actual blank measured value (ANALYSIS SAMPLE NO. HCl A.2 blank), or (2) 5% of the Hg content in the combined HCl rinse and digested sample (ANALYSIS SAMPLE No. HCl A.2).

$$m_{(fltr)Hg} = \left[\frac{\left[C_{(fltr)Hg}\ D.F._{(fltr)Hg}\ V_{f(fltr)}\right]}{S_{(fltr)}} - \frac{\left[C_{(fltr\ blk)Hg}\ D.F._{(fltr\ blk)Hg}\ V_{f(fltr\ blk)}\right]}{S_{(fltr\ blk)}}\right]\left(10^{-3}\right) \quad \text{Eq. 101A} - 2$$

where:

$m_{(fltr)Hg}$=Total blank corrected µg of Hg in $KMnO_4$ filtrate and HNO_3 digestion of filter sample.

$C_{(fltr)Hg}$=Total ng of Hg in aliquot of $KMnO_4$ filtrate and HNO_3 digestion of filter analyzed (aliquot of ANALYSIS SAMPLE No. A.1).

$C_{(fltr\ blk)Hg}$=Total ng of Hg analyzed in aliquot of $KMnO_4$ blank and HNO_3 digestion of blank filter (aliquot of ANALYSIS SAMPLE No. A.1 blank).

$V_{f(fltr)}$=Solution volume of original sample, normally 100 ml for samples diluted as described in Section 7.3.

$V_{f(blk)}$=Solution volume of blank sample, 1000 ml for samples diluted as described in Section 7.3.

$D.F._{(fltr)Hg}$=Dilution factors, if necessary for ANALYSIS SAMPLE No. A.1, calculated similarly to those above for the (HC1) Hg samples.

$D.F._{(fltr\ blk)Hg}$=Dilution factors, if necessary for ANALYSIS SAMPLE No. A.1 blank, calculated similarly to those above for the (HCl blk)Hg samples.

9.2.2 The maximum allowable blank subtraction for the HCl is the lesser of the two following values: (1) the actual blank measured value (ANALYSIS SAMPLE No. ''A.1 blank''), or (2) 5% of the Hg content in the filtrate (ANALYSIS SAMPLE No. ''A.1'').

$$m_{Hg} = m_{(HC1)Hg + m(fltr)Hg} \qquad \text{Eq. 101A–3}$$

where:

m_{Hg}=Total blank corrected Hg content in each sample, µg.

$m_{(HC1)Hg}$=Total blank corrected µg of Hg in HCl rinse and HCl digestate of filter sample.

$M_{(fltr)Hg}$=Total blank corrected µg of Hg in $KMnO_4$ filtrate and HNO_3 digestion of filter sample.

* * * * *

10. * * *

3. Wilshire, Frank W., J.E. Knoll, T.E. Ward, and M.R. Midgett. Reliability Study of the U.S. EPA's Method 101A—Determiantion of Particulate and Gaseous Mercury Emissions U.S. Environmental Protection Agency, Research Triangle Park, NC. Report No. 600/D–31/219 AREAL 367, NTIS Acc No. PB91–23361.

* * * * *

5. In Appendix B to part 61, Method 101A is amended by revising the second and last sentences of section 7.1.1 and by revising the last two sentences of the first paragraph of section 7.1.2 to read as follows:

Appendix B to Part 61—Test Methods

* * * * *

Method 101A Determination of Particulate and Gaseous Mercury Emissions From Sewage Sludge Incinerators Meth. 101A

* * * * *

7.1.1 * * * In this method, highly oxidizable matter could make it impossible to sample for the required minimum time.* * * In cases where an excess of water condensation is encountered, collect two runs to make one sample, or add an extra impinger in front of the first impinger (also containing acidified $KMnO_4$ solution).

7.2.1 * * * In this method, clean all the glass components (a hood is recommended) by rinsing with 50 percent HNO_3, tap water, 8 N HCl, tap water, and finally deionized distilled water. Then place 50 ml of the acidified 4 percent $KMnO_4$ absorbing solution in the first impinger and 100 ml in each of the second and third impingers.

* * * * *

[FR Doc. 96–9834 Filed 4–24–96; 8:45 am]

BILLING CODE 6560–50–M

---

40 CFR Part 63

[FRL–5458–7]

State of Tennessee Request for Approval of Section 112(l) Authority

AGENCY: Environmental Protection Agency (EPA).

ACTION: Direct final rule.

SUMMARY: State of Tennessee has applied for approval of its Rule No. 1200–3–11–.08, Emission Standards for Emissions of Radionuclides Other Than Radon From Department of Energy Facilities; and also Rule No. 1200–3–11–.17, National Emission Standard for Radon Emissions From Department of Energy Facilities, under section 112(l) of the Clean Air Act (CAA) as amended November 15, 1990. The Environmental Protection Agency (EPA) has reviewed the State of Tennessee's submittal and has made the decision that the State of Tennessee's Rule No. 1200–3–11–.08 and Rule No. 1200–3–11–.17, satisfies all of the requirements necessary to qualify as a complete submittal. Thus, the EPA intends to take comment on whether the State of Tennessee's Rule No. 1200–3–11–.08 and Rule No. 1200–

3–11–.17, should be implemented and enforced in place of the EPA's 40 CFR part 61, subpart H, and 40 CFR part 61, subpart Q, respectively. The State of Tennessee's submittal is available for public review and comment.

DATES: This action will be effective on June 10, 1996 unless adverse or critical comments are received by May 28, 1996. If the effective date is delayed, timely notice will be published in the Federal Register.

ADDRESSES: Copies of the State of Tennessee's submittal are available during normal business hours at the following addresses for inspection and copying:

Division of Air Pollution Control, Tennessee Department of Environment and Conservation, L & C Annex, 9th Floor, 401 Church Street, Nashville, Tennessee;

U.S. EPA Headquarters Library, PM 211A, 401 M Street, SW., Washington, DC 20460, Phone: (202) 382–5926; and

U.S. EPA Region 4, Regional Library, 345 Courtland St., NE., Atlanta, GA 30365, Phone: (404) 347–3555, x6050.

Written comments should be sent to Douglas Neeley, EPA Region 4, Air Programs Branch, 345 Courtland St, NE., Atlanta, GA 30365, Phone: (404) 347–3555, x4176, and should be submitted concurrently to Mr. John W. Walton, P.E., Director, Division of Air Pollution Control, Tennessee Department of Environment and Conservation, L & C Annex, 9th Floor, 401 Church Street, Nashville, Tennessee 37243–1531, Phone: (615) 532–0554.

FOR FURTHER INFORMATION CONTACT: Lee Page, EPA Region 4, Air Programs Branch, 345 Courtland St, NE., Atlanta, GA 30365, Phone: (404) 347–3555, x4199.

SUPPLEMENTARY INFORMATION:

A. Background.

Section 112(l) of the Clean Air Act as amended in 1990, enables the EPA to approve State air toxics programs or rules to operate in place of the Federal air toxics program. Approval is granted by the EPA if the Agency finds that the State program or rule: (1) is ''no less stringent'' than the corresponding Federal rule or program, (2) provides adequate authority and resources, (3) provides a schedule for implementation and compliance that is sufficiently expeditious, and (4) is otherwise in compliance with Federal guidance.

B. The State of Tennessee rule 1200–3–11–.08, Emission Standards for Emissions of Radionuclides Other Than Radon From Department of Energy Facilities, and rule 1200–3–11–.17, National Emission Standards for Radon Emissions From Department of Energy Facilities, are verbatim the Federal rules 40 CFR part 61, subpart H, and 40 CFR part 61, subpart Q, respectively.

EPA is approving the State of Tennessee's rule No. 1200–3–11–.08 and rule No. 1200–3–11–.17, as a direct final rule without prior proposal because the Agency views this as a noncontroversial delegation request and anticipates no adverse comments. If no adverse comments are received in response to this direct final rule, no further activity is contemplated. If EPA receives adverse comments, the direct final rule will be withdrawn and all public comments received will be addressed in a subsequent action. Any parties interested in commenting on this action should do so at this time.

List of Subjects in 40 CFR Part 63

Environmental protection, Air Pollution control, Hazardous substances, Reporting and recordkeeping requirements.

Authority: This notice is issued under the authority of Title III of the Clean Air Act as amended, 42 U.S.C. 2399.

Dated: March 12, 1996.

Bruce P. Miller,

Acting Division Director.

[FR Doc. 96–10099 Filed 4–24–96; 8:45 am]

BILLING CODE 6560–50–P

---

40 CFR Part 271

[FRL–5459–2]

Alabama; Final Authorization of Revisions to State Hazardous Waste Management Program

AGENCY: Environmental Protection Agency.

ACTION: Immediate final rule.

SUMMARY: Alabama has applied for final authorization of revisions to its hazardous waste program under the Resource Conservation and Recovery Act (RCRA). Alabama's revisions consist of Section B ''Corrective Action Beyond Facility Boundary'' and Section C ''Corrective Action for Injection Wells'' of the HSWA Codification Rule in HSWA Cluster II, ''Burning of Hazardous Waste in Boilers and Industrial Furnaces Corrections and Technical Amendment'', ''Burning of Hazardous Waste in Boilers and Industrial Furnaces Technical Amendment II'', and ''Boilers and Industrial Furnaces; Administrative Stay for Coke Ovens'' which are provisions in RCRA Cluster II and ''Corrective Action Management Units and Temporary Units'' (CAMU), a RCRA Cluster III provision. These requirements are listed in Section B of this notice. The Environmental Protection Agency (EPA) has reviewed Alabama's applications and has made a decision, subject to public review and comment, that Alabama's hazardous waste program revisions satisfy all of the requirements necessary to qualify for final authorization. Thus, EPA intends to approve Alabama's hazardous waste program revisions. Alabama's applications for program revisions are available for public review and comment.

DATES: Final authorization for Alabama's program revisions shall be effective June 24, 1996 unless EPA publishes a prior Federal Register action withdrawing this immediate final rule. All comments on Alabama's program revision applications must be received by the close of business, May 28, 1996.

ADDRESSES: Copies of Alabama's program revision applications are available during 8:00 am to 4:30 pm at the following addresses for inspection and copying: Alabama Department of Environmental Management, 1751 Congressman W. L. Dickinson Drive, Montgomery, Alabama 36109–2608, (334) 271–7700; U.S. EPA, Region 4, Library, 345 Courtland Street, NE, Atlanta, Georgia 30365; (404) 347–4216. Written comments should be sent to Al Hanke at the address listed below.

FOR FURTHER INFORMATION CONTACT: Al Hanke, Chief, State Programs Section, Waste Programs Branch, Waste Management Division, U.S. Environmental Protection Agency, 345 Courtland Street, NE, Atlanta, Georgia 30365; (404) 347–2234 vmx 2018.

SUPPLEMENTARY INFORMATION:

A. Background

States with final authorization under Section 3006(b) of the Resource Conservation and Recovery Act (''RCRA'' or ''the Act''), 42 U.S.C. 6926(b), have a continuing obligation to maintain a hazardous waste program that is equivalent to, consistent with, and no less stringent than the Federal hazardous waste program. In addition, as an interim measure, the Hazardous and Solid Waste Amendments of 1984 (Public Law 98–616, November 8, 1984, hereinafter ''HSWA'') allows States to revise their programs to become substantially equivalent instead of equivalent to RCRA requirements promulgated under HSWA authority. States exercising the latter option receive ''interim authorization'' for the HSWA requirements under Section

3006(g) of RCRA, 42 U.S.C. 6926(g), and later apply for final authorization for the HSWA requirements. Revisions to State hazardous waste programs are necessary when Federal or State statutory or regulatory authority is modified or when certain other changes occur. Most commonly, State program revisions are necessitated by changes to EPA's regulations in 40 CFR Parts 260–268 and 124 and 270.

B. Alabama

Alabama initially received final authorization for its base RCRA program effective on December 22, 1987. Alabama received authorization for revisions to its program on January 28, 1992, July 12, 1992, December 21, 1992, May 17, 1993, November 23, 1993, April 4, 1994, January 13, 1995 and October 13, 1995. On July 1, 1991, and June 25, 1993, Alabama submitted program revision applications for additional program approvals. Today, Alabama is seeking approval of its program revisions in accordance with 40 CFR 271.21(b)(3).

EPA has reviewed Alabama's applications and has made an immediate final decision that Alabama's hazardous waste program revisions satisfy all of the requirements necessary to qualify for final authorization. Consequently, EPA intends to grant final authorization for the additional program modifications to Alabama. The public may submit written comments on EPA's immediate final decision up until May 28, 1996.

Copies of Alabama's applications for these program revisions are available for inspection and copying at the locations indicated in the ''Addresses'' section of this notice. Approval of Alabama's program revisions shall become effective June 24, 1996, unless an adverse comment pertaining to the State's revisions discussed in this notice is received by the end of the comment period.

If an adverse comment is received EPA will publish either (1) a withdrawal of the immediate final decision or (2) a notice containing a response to comments which either affirms that the immediate final decision takes effect or reverses the decision.

EPA shall administer any RCRA hazardous waste permits, or portions of permits that contain conditions based upon the Federal program provisions for which the State is applying for authorization and which were issued by EPA prior to the effective date of this authorization. EPA will suspend issuance of any further permits under the provisions for which the State is being authorized on the effective date of this authorization.

Alabama is today seeking authority to administer the following Federal requirements.

Federal requirement	FR reference	FR promulgation date	State authority
Checklist 44 B	52 FR 45788	12/1/87	335–14–5–.06(11)(e),(e)1,2 335–14–5.06(12)(c)
HSWA Codification Rule; Corrective Action Beyond Facility Boundary			
Checklist 44 C	52 FR 45788	12/1/87	335–6–8–.07 335–14–6–.01(1)(c)
HSWA Codification Rule; Correction Action for Injection Wells			
Checklist 94	56 FR 32688	7/17/9	335.1401(3)(c)2.(ii)(II) 335–14–.01(6)(a)2,2.(ii) 335–14–6–.16(1) 335–14–7–.05(1)(c)(d) 335–14–7–.08 (1–8),(9)(a)(c),(10) 335–14–7–Appendix I–IV, Appendix VII–X 335–14–8–.02(13)(a) 2.(ii)(II)(III) 335–14–8–.02(13)(a)5.(vii) 335–14–8–.02(13)(a)6,(b)1 335–14–8–.06(5)(b)1,4 335–14–8–.06(5)(c)2.(i),2.(ii), 3.(vi),3.(vii) 335–14–8–.07(4)(f)(g)
Burning of Hazardous Waste in Boilers and Industrial Furnaces; Corrections and Technical Amendments I			
Checklist 96	56 FR 42504	8/27/91	335–14–2–.01(2)(d)2,2.(i–iii) 335–14–6–.07(3)(d)2, (d)2.(i),(ii) 335–14–6–.07(4)(a)(b) 335.14.7–.08(1)(3)(4)(5), (9)(a)2(10–13) 335–14–7–Appendix IX,XI,XII
Burning of Hazardous Waste in Boilers and Industrial Furnaces; Technical Amendments II			
Checklist 98	56 FR 43874	9/5/91	335–14–7–.08(1)

Federal requirement	FR reference	FR promulgation date	State authority
Burning of Hazardous Waste in Boilers and Industrial Furnaces; Administrative Stay for Coke Ovens			
Checklist 121	58 FR 8658	2/16/93	335–14–1–.02(1) 335–14–5–.01(3) 335–14–5–.06(12)(b) 335–14–5–.19(1)(a),(1)(a)1,2 335–14–5–19(1)(b)1,(1)(b)1.(i),(ii) 335–14–5–.19(1)(b)2,(1)(c), (1)(c)1–(7),(1)d,(1)(e), (1)(e)1,2,3,3.(i).3.(ii), (1)(e)4,(1)(f),(1)(g),(1)(h) 335–14–5–.19(2)(a–g) 335–14–6–.01(1)(a) 335–14–9–.01(2) 335–14–1–.02(2) 335–14–8–.04(3)(b)
Corrective Action Management Units and Temporary Units			

Alabama's applications for these program revisions meet all of the statutory and regulatory requirements established by RCRA. Accordingly, Alabama is granted final authorization to operate its hazardous waste program as revised.

Alabama now has responsibility for permitting treatment, storage, and disposal facilities within its borders and carrying out other aspects of the RCRA program, subject to the limitations of its program revision applications and previously approved authorities. Alabama also has primary enforcement responsibilities, although EPA retains the right to conduct inspections under Section 3007 of RCRA and to take enforcement actions under sections 3008, 3013, and 7003 of RCRA.

Compliance With Executive Order 12866

The Office of Management and Budget has exempted this rule from the requirements of Section 6 of Executive Order 12866.

Unfunded Mandates Reform Act

Title II of the Unfunded Mandates Reform Act of 1995 (UMRA), P.L. 104–4, establishes requirements for Federal agencies to assess the effects of their regulatory actions on State, local, and tribal governments and the private sector. Under section 202 of the UMRA, EPA generally must prepare a written statement, including a cost-benefit analysis, for proposed and final rules with ''Federal mandates'' that may result in expenditures to State, local, and tribal governments, in the aggregate, or to the private sector, of $100 million or more in any one year. When a written statement is needed for an EPA rule, section 205 of the UMRA generally requires EPA to identify and consider a reasonable number of regulatory alternatives and adopt the least costly, most cost-effective or least burdensome alternative that achieves the objectives of the rule. The provisions of section 205 do not apply when they are inconsistent with applicable law. Moreover, section 205 allows EPA to adopt an alternative other than the least costly, most cost-effective or least burdensome alternative if the Administrator publishes with the final rule an explanation why that alternative was not adopted. Before EPA establishes any regulatory requirements that may significantly or uniquely affect small governments, including tribal governments, it must have developed under section 203 of the UMRA a small government agency plan. The plan must provide for notifying potentially affected small governments, giving them meaningful and timely input in the development of EPA regulatory proposals with significant Federal intergovernmental mandates, and informing, educating, and advising them on compliance with the regulatory requirements.

EPA has determined that this rule does not contain a Federal mandate that may result in expenditures of $100 million or more for State, local and tribal governments, in the aggregate, or the private sector in any one year. EPA does not anticipate that the approval of Alabama's hazardous waste program referenced in today's notice will result in annual costs of $100 million or more.

EPA's approval of state programs generally has a deregulatory effect on the private sector because once it is determined that a state hazardous waste program meets the requirements of RCRA section 3006(b) and the regulations promulgated thereunder at 40 CFR Part 271, owners and operators of hazardous waste treatment, storage, or disposal facilities (TSDFs) may take advantage of the flexibility that an approved state may exercise. Such flexibility will reduce, not increase compliance costs for the private sector. Thus, today's rule is not subject to the requirements of sections 202 and 205 of the UMRA.

EPA has determined that this rule contains no regulatory requirements that might significantly or uniquely affect small governments. The Agency recognizes that small governments may own and/or operate TSDFs that will become subject to the requirements of an approved state hazardous waste program. However, such small governments which own and/or operate TSDFs are already subject to the requirements in 40 CFR Parts 264, 265, and 270. Once EPA authorizes a state to administer its own hazardous waste program and any revisions to that program, these same small governments will be able to own and operate their TSDFs with increased levels of flexibility provided under the approved state program.

Certification Under the Regulatory Flexibility Act

Pursuant to the provisions of 5 U.S.C. 605(b), I hereby certify that this authorization will not have a significant economic impact on a substantial number of small entities. This authorization effectively suspends the applicability of certain Federal regulations in favor of Alabama's program, thereby eliminating duplicative requirements for handlers of hazardous waste in the State. It does not impose any new burdens on small entities. This rule, therefore, does not require a regulatory flexibility analysis.

List of Subjects in 40 CFR Part 271

Environmental protection, Administrative practice and procedure,

Confidential business information, Hazardous materials transportation, Hazardous waste, Indian lands, Intergovernmental relations, Penalties, Reporting and recordkeeping requirements, Water pollution control, Water supply.

Authority: This notice is issued under the authority of Sections 2002(a), 3006, and 7004(b) of the Solid Waste Disposal Act as amended (42 U.S.C. 6912(a), 6926, 6974(b)).

Dated: April 4, 1996.

John H. Hankinson, Jr.,

Regional Administrator.

[FR Doc. 96–10102 Filed 4–24–96; 8:45 am]

BILLING CODE 6560–50–P

---

40 CFR Part 271

[FRL–5459–1]

North Carolina; Final Authorization of Revisions to State Hazardous Waste Management Program

AGENCY: Environmental Protection Agency.

ACTION: Immediate final rule.

SUMMARY: North Carolina has applied for final authorization of revisions to its hazardous waste program under the Resource Conservation and Recovery Act (RCRA). North Carolina's revisions consist of the provisions contained in rules promulgated between July 1, 1993, and June 30, 1994, otherwise known as RCRA Cluster IV. These requirements are listed in Section B of this notice. The Environmental Protection Agency (EPA) has reviewed North Carolina's application and has made a decision, subject to public review and comment, that North Carolina's hazardous waste program revisions satisfy all of the requirements necessary to qualify for final authorization. Thus, EPA intends to approve North Carolina's hazardous waste program revisions. North Carolina's application for program revisions is available for public review and comment.

DATES: Final authorization for North Carolina's program revisions shall be effective June 24, 1996, unless EPA publishes a prior Federal Register action withdrawing this immediate final rule. All comments on North Carolina's program revision application must be received by the close of business, May 28, 1996.

ADDRESSES: Copies of North Carolina's program revision application are available during normal business hours at the following addresses for inspection and copying: North Carolina Department of Environment, Health, and Natural Resources, P.O. Box 27687, Raleigh, North Carolina 27611–7687; U.S. EPA Region 4, Library, 345 Courtland Street, NE, Atlanta, Georgia 30365; (404) 347–4216. Written comments should be sent to Al Hanke at the address listed below.

FOR FURTHER INFORMATION CONTACT: Al Hanke, Chief, State Programs Section, Waste Programs Branch, Waste Management Division, U.S. Environmental Protection Agency, 345 Courtland Street, NE, Atlanta, Georgia 30365; (404) 347–2234.

SUPPLEMENTARY INFORMATION:

A. Background

States with final authorization under Section 3006(b) of the Resource Conservation and Recovery Act (''RCRA'' or ''the Act''), 42 U.S.C. 6926(b), have a continuing obligation to maintain a hazardous waste program that is equivalent to, consistent with, and no less stringent than the Federal hazardous waste program.

In addition, as an interim measure, the Hazardous and Solid Waste Amendments of 1984 (Pub. L. 98–616, November 8, 1984, hereinafter ''HSWA'') allows States to revise their programs to become substantially equivalent instead of equivalent to RCRA requirements promulgated under HSWA authority. States exercising the latter option receive ''interim authorization'' for the HSWA requirements under Section 3006(g) of RCRA, 42 U.S.C. 6926(g), and later apply for final authorization for the HSWA requirements.

Revisions to State hazardous waste programs are necessary when Federal or State statutory or regulatory authority is modified or when certain other changes occur. Most commonly, State program revisions are necessitated by changes to EPA's regulations in 40 CFR Parts 260–268 and 124 and 270.

B. North Carolina

North Carolina initially received final authorization for its base RCRA program effective on December 31, 1984, (49 FR 48694). North Carolina most recently received final authorization effective November 27, 1995, for the provisions of RCRA Cluster III. Today, North Carolina is seeking approval of additional program revisions in accordance with 40 CFR 271.21(b)(3).

EPA has reviewed North Carolina's application and has made an immediate final decision that North Carolina's hazardous waste program revisions satisfy all of the requirements necessary to qualify for final authorization. Consequently, EPA intends to grant final authorization for the additional program modifications to North Carolina. The public may submit written comments on EPA's immediate final decision up until May 28, 1996.

Copies of North Carolina's application for these program revisions are available for inspection and copying at the locations indicated in the ''Addresses'' section of this notice.

Approval of North Carolina's program revisions shall become effective June 24, 1996, unless an adverse comment pertaining to the State's revisions discussed in this notice is received by the end of the comment period.

If an adverse comment is received EPA will publish either (1) a withdrawal of the immediate final decision or (2) a notice containing a response to comments which either affirms that the immediate final decision takes effect or reverses the decision.

EPA shall administer any RCRA hazardous waste permits, or portions of permits that contain conditions based upon the Federal program provisions for which the State is applying for authorization and which were issued by EPA prior to the effective date of this authorization. EPA will suspend issuance of any further permits under the provisions for which the State is being authorized on the effective date of this authorization.

North Carolina is today seeking authority to administer the following Federal requirements promulgated between July 1, 1993, and June 30, 1994.

Federal requirement	HSWA or FR reference	Promulgation	State authority
CHECKLIST 125 Boilers and Industrial Furnaces; Changes for Consistency with New Air Regulations.	58 FR 38816	July 20, 1993	N.C.G.S. 130A–294(c)(1) N.C.G.S. 130A–294(c)(7) N.C.G.S. 130A–294(c)(15) N.C.G.S. 150B–21.6 15A NCAC 13A.0001(e) 15A NCAC 13A.0011(e) 15A NCAC 13A.0011(f)
CHECKLIST 126 Testing and Monitoring Activities	58 FR 46040	Aug. 31, 1993	N.C.G.S. 130A–294(c)(1) N.C.G.S. 130A–294(c)(1a) N.C.G.S. 130A–294(c)(2) N.C.G.S. 130A–294(c)(7) N.C.G.S. 130A–294(c)(14) N.C.G.S. 130A–294(c)(15) N.C.G.S. 150B–21.6 15A NCAC 13A.0001(e) 15A NCAC 13A.0003(b) 15A NCAC 13A.0006(c) 15A NCAC 13A.0006(e) 15A NCAC 13A.0009(k) 15A NCAC 13A.0009(o) 15A NCAC 13A.0010(n) 15A NCAC 13A.0010(j) 15A NCAC 13A.0012(a) 15A NCAC 13A.0012(c) 15A NCAC 13A.0012(e) 15A NCAC 13A.0013(a) 15A NCAC 13A.0013(b) 15A NCAC 13A.0013(i)
CHECKLIST 127 Boilers and Industrial Furnaces; Administrative Stay and Interim Standards for Bevill Residues.	58 FR 59598	Nov. 9, 1993	N.C.G.S. 130A–294(c)(1) N.C.G.S. 130A–294(c)(7) N.C.G.S. 130A–294(c)(15) N.C.G.S. 150B–21.6 15A NCAC 13A.0011(e) 15A NCAC 13A.0011(f)
CHECKLIST 128 Waste from the use of Chlorophenolic Formulations in Wood Surface Protection.	59 FR 458	Jan. 4, 1994	N.C.G.S. 130A–294(c)(1) N.C.G.S. 130A–294(c)(15) N.C.G.S. 150B–21.6 15A NCAC 13A.0001(e) 15A NCAC 13A.0006(e)
CHECKLIST 129 Revision of Conditional Exemption for Small Scale Treatability Studies.	59 FR 8362	Feb. 18, 1994	N.C.G.S. 130A–294(c)(1) N.C.G.S. 130A–294(c)(15) N.C.G.S. 150B–21.6 15A NCAC 13A.0006(a)
CHECKLIST 130 Recycled Used Oil Management Standards; Technical Amendments and Correction II.	59 FR 10550	Mar. 4, 1994	N.C.G.S. 130A–294(b) N.C.G.S. 130A–294(c)(1) N.C.G.S. 130A–294(c)(15) N.C.G.S. 150B–21.6 15A NCAC 13A.0018(a) 15A NCAC 13A.0018(b) 15A NCAC 13A.0018(c) 15A NCAC 13A.0018(e) 15A NCAC 13A.0018(f) 15A NCAC 13A.0018(g)
CHECKLIST 131 Recordkeeping Instruction: Technical Amendments.	59 FR 13891	Mar. 24, 1994	N.C.G.S. 130A–294(c)(2) N.C.G.S. 130A–294(c)(15) N.C.G.S. 150B–21.6 15A NCAC 13A.0009(y) 15A NCAC 13A.0010(v)
CHECKLIST 132 Wood Surface Protection; Correction	59 FR 28484	June 2, 1994	N.C.G.S. 130A–294(c)(1) N.C.G.S. 130A–294(c)(15) N.C.G.S. 150B–21.6 15A NCAC 13A.0001(e)
CHECKLIST 133 Letter of Credit Revision	59 FR 29958	June 10, 1994	N.C.G.S. 130A–294(c)(7) N.C.G.S. 130A–294(c)(10) N.C.G.S. 130A–294(c)(15) N.C.G.S. 150B–21.6 15A NCAC 13A.0009(i)

Federal requirement	HSWA or FR reference	Promulgation	State authority
CHECKLIST 134 Correction of Beryllium Powder (PO15) Listing	59 FR 31551	June 20, 1994	N.C.G.S. 130A–294(c)(1) N.C.G.S. 130A–294(c)(7) N.C.G.S. 130A–294(c)(15) N.C.G.S. 150B–21.6 15A NCAC 13A.0006(d) 15A NCAC 13A.0006(e) 15A NCAC 13A.0012(c)

C. Decision

I conclude that North Carolina's application for these program revisions meets all of the statutory and regulatory requirements established by RCRA. Accordingly, North Carolina is granted final authorization to operate its hazardous waste program as revised.

North Carolina now has responsibility for permitting treatment, storage, and disposal facilities within its borders and carrying out other aspects of the RCRA program, subject to the limitations of its program revision application and previously approved authorities. North Carolina also has primary enforcement responsibilities, although EPA retains the right to conduct inspections under Section 3007 of RCRA and to take enforcement actions under sections 3008, 3013, and 7003 of RCRA.

Compliance With Executive Order 12866

The Office of Management and Budget has exempted this rule from the requirements of Section 6 of Executive Order 12866.

Unfunded Mandates Reform Act

Title II of the Unfunded Mandates Reform Act of 1995 (UMRA), Public Law 104–4, establishes requirements for Federal agencies to assess the effects of their regulatory actions on State, local, and tribal governments and the private sector. Under section 202 of the UMRA, EPA generally must prepare a written statement, including a cost-benefit analysis, for proposed and final rules with ''Federal mandates'' that may result in expenditures to State, local, and tribal governments, in the aggregate, or to the private sector, of $100 million or more in any one year. When a written statement is needed for an EPA rule, section 205 of the UMRA generally requires EPA to identify and consider a reasonable number of regulatory alternatives and adopt the least costly, most cost-effective or least burdensome alternative that achieves the objectives of the rule. The provisions of section 205 do not apply when they are inconsistent with applicable law. Moreover, section 205 allows EPA to adopt an alternative other than the least costly, most cost-effective or least burdensome alternative if the Administrator publishes with the final rule an explanation why that alternative was not adopted. Before EPA establishes any regulatory requirements that may significantly or uniquely affect small governments, including tribal governments, it must have developed under section 203 of the UMRA a small government agency plan. The plan must provide for notifying potentially affected small governments, giving them meaningful and timely input in the development of EPA regulatory proposals with significant Federal intergovernmental mandates, and informing, educating, and advising them on compliance with the regulatory requirements.

EPA has determined that this rule does not contain a Federal mandate that may result in expenditures of $100 million or more for State, local and tribal governments, in the aggregate, or the private sector in any one year. EPA does not anticipate that the approval of North Carolina's hazardous waste program referenced in today's notice will result in annual costs of $100 million or more.

EPA's approval of state programs generally has a deregulatory effect on the private sector because once it is determined that a state hazardous waste program meets the requirements of RCRA section 3006(b) and the regulations promulgated thereunder at 40 CFR Part 271, owners and operators of hazardous waste treatment, storage, or disposal facilities (TSDFs) may take advantage of the flexibility that an approved state may exercise. Such flexibility will reduce, not increase compliance costs for the private sector. Thus, today's rule is not subject to the requirements of sections 202 and 205 of the UMRA.

EPA has determined that this rule contains no regulatory requirements that might significantly or uniquely affect small governments. The Agency recognizes that small governments may own and/or operate TSDFs that will become subject to the requirements of an approved state hazardous waste program. However, such small governments which own and/or operate TSDFs are already subject to the requirements in 40 CFR Parts 264, 265, and 270. Once EPA authorizes a state to administer its own hazardous waste program and any revisions to that program, these same small governments will be able to own and operate their TSDFs with increased levels of flexibility provided under the approved state program.

Certification Under the Regulatory Flexibility Act

Pursuant to the provisions of 5 U.S.C. 605(b), I hereby certify that this authorization will not have a significant economic impact on a substantial number of small entities. This authorization effectively suspends the applicability of certain Federal regulations in favor of North Carolina's program, thereby eliminating duplicative requirements for handlers of hazardous waste in the State. It does not impose any new burdens on small entities. This rule, therefore, does not require a regulatory flexibility analysis.

List of Subjects in 40 CFR Part 271

Environmental protection, Administrative practice and procedure, Confidential business information, Hazardous materials transportation, Hazardous waste, Indian lands, Intergovernmental relations, Penalties, Reporting and recordkeeping requirements, Water pollution control, Water supply.

Authority: This notice is issued under the authority of Sections 2002(a), 3006 and 7004(b) of the Solid Waste Disposal Act as amended (42 U.S.C. 6912(a), 6926, 6974(b)).

Dated: April 4, 1996.

Phyllis P. Harris,

Acting Regional Administrator.

[FR Doc. 96–10101 Filed 4–24–96; 8:45 am]

BILLING CODE 6560–50–P

40 CFR Part 300

[FRL–5458–9]

National Oil and Hazardous Sustances Contingency Plan National Priorities List

AGENCY: Environmental Protection Agency (EPA).

ACTION: Notice of deletion of Lee's Lane Superfund Site, Louisville, Kentucky from the National Priorities List.

SUMMARY: The U.S. Environmental Protection Agency (EPA) announces the deletion of the Lees Lane Superfund Site in Louisville, Kentucky, from the National Priorities List (NPL), which is Appendix B of 40 CFR Part 300 of the National Oil and Hazardous Substances Contingency Plan (NCP). EPA and the Commonwealth of Kentucky have determined that all appropriate Fund-financed responses under the Comprehensive Environmental Response, Compensation and Liability Act (CERCLA), as amended, have been implemented and that no further cleanup is appropriate. Moreover, EPA and the Commonwealth of Kentucky determined that response actions conducted at the site to date have been protective of public health, welfare, and the environment.

EFFECTIVE DATE: May 1, 1996.

FOR FURTHER INFORMATION CONTACT: Liza Montalvo, Remedial Project Manager, U.S. Environmental Protection Agency, Region 4, North Superfund Remedial Branch, 345 Courtland Street NE., Atlanta, GA 30365, (404) 347–7791, extension 2030.

SUPPLEMENTARY INFORMATION: The site to be deleted from the NPL is: Lees Lane Landfill Superfund Site, Louisville, Kentucky.

A Notice of Intent to Delete for this site was published on May 16, 1988 (SW–FRL–3380–7). A Revised Notice of Intent to Delete was published on February 14, 1992 (FRL–4102–6). The closing date for comments on the Revised Notice of Intent to Delete was March 16, 1992. EPA received two comment letters, one from the Kentucky Resources Council (KRC) and the other from the Kentucky Natural Resources and Environmental Protection Cabinet (KNREPC). The KRC expressed its opposition to the Site's deletion stating that the remedy was not fully protective of the environment. EPA responded that the selected remedy protected human health and the environment by mitigating human exposures to contaminated Site media, and reducing continued uncontrolled releases to the environment. The KNREPC stated in its letter that the drums of hazardous waste which were discovered and removed from the Site in March 1992 by KNREPC were apparently left from the original disposal activities but had not been addressed by EPA's response action. EPA replied that such drums were likely placed there in the months preceding their discovery, and were not left on the Site at the close of EPA's response actions, or during the conduct of O&M activities. The KRC and the KNREPC expressed in their respective letters that the scope of waste disposal activities were never fully characterized at the Site. EPA responded that the estimated volume of waste buried at the Site was 2,400,000 yd^3. EPA also explained the basis for this estimate, and how the Site was characterized. These comments and EPA's responses are documented in more detail in the Responsiveness Summary which is available through the EPA Region 4 public docket located at EPA's Region 4 Office, 345 Courtland, St, N.E., Atlanta, Ga., 30365.

EPA identifies sites that appear to present a significant risk to public health, welfare, or the environment and it maintains the NPL as the list of those sites. Any site deleted from the NPL remains eligible for Fund-financed remedial actions in the unlikely event that conditions at the site warrant such action in the future. Section 300.425(e)(3) of the NCP states that Fund-financed actions may be taken at sites deleted from the NPL. Deletion of a site from the NPL does not affect responsible party liability or impede agency efforts to recover costs associated with response efforts.

List of Subjects in 40 CFR Part 300

Environmental protection, Air pollution control, Chemicals, Hazardous waste, Hazardous substances, Intergovernmental relations, Penalties, Reporting and recordkeeping requirements, Superfund, Water pollution control, Water supply.

Dated: March 25, 1996.

Phyllis P. Harris,

Acting Regional Administrator, USEPA Region 4.

For the reasons set out in the preamble, 40 CFR part 300 is amended as follows:

PART 300—[AMENDED]

The authority citation for part 300 continues to read as follows:

Authority: 33 U.S.C. 1321(c)(2); 42 U.S.C. 9601–9657; E.O. 12777, 56 FR 54757; 3 CFR 1991 Comp., p. 351; E.O. 12580, 52 FR 2923; 3 CFR, 1987 Comp., p. 193.

Appendix B [Amended]

2. Table 1 of appendix B to part 300 is amended by removing the site Lees Lane Landfill, Louisville, Kentucky.

[FR Doc. 96–10100 Filed 4–24–96; 8:45 am]

BILLING CODE 6560–50–P

FEDERAL EMERGENCY MANAGEMENT AGENCY

44 CFR Part 64

[Docket No. FEMA–7639]

List of Communities Eligible for the Sale of Flood Insurance

AGENCY: Federal Emergency Management Agency (FEMA).

ACTION: Final rule.

SUMMARY: This rule identifies communities participating in the National Flood Insurance Program (NFIP). These communities have applied to the program and have agreed to enact certain floodplain management measures. The communities' participation in the program authorizes the sale of flood insurance to owners of property located in the communities listed.

EFFECTIVE DATES: The dates listed in the third column of the table.

ADDRESSES: Flood insurance policies for property located in the communities listed can be obtained from any licensed property insurance agent or broker serving the eligible community, or from the NFIP at: Post Office Box 6464, Rockville, MD 20849, (800) 638–6620.

FOR FURTHER INFORMATION CONTACT: Robert F. Shea, Jr., Division Director, Program Implementation Division, Mitigation Directorate, 500 C Street SW., room 417, Washington, DC 20472, (202) 646–3619.

SUPPLEMENTARY INFORMATION: The NFIP enables property owners to purchase flood insurance which is generally not otherwise available. In return, communities agree to adopt and administer local floodplain management measures aimed at protecting lives and new construction from future flooding. Since the communities on the attached list have recently entered the NFIP, subsidized flood insurance is now available for property in the community.

In addition, the Director of the Federal Emergency Management Agency has identified the special flood hazard areas in some of these communities by publishing a Flood Hazard Boundary Map (FHBM) or Flood Insurance Rate Map (FIRM). The date of the flood map, if one has been published, is indicated

in the fourth column of the table. In the communities listed where a flood map has been published, Section 102 of the Flood Disaster Protection Act of 1973, as amended, 42 U.S.C. 4012(a), requires the purchase of flood insurance as a condition of Federal or federally related financial assistance for acquisition or construction of buildings in the special flood hazard areas shown on the map.

The Director finds that the delayed effective dates would be contrary to the public interest. The Director also finds that notice and public procedure under 5 U.S.C. 553(b) are impracticable and unnecessary.

National Environmental Policy Act

This rule is categorically excluded from the requirements of 44 CFR Part 10, Environmental Considerations. No environmental impact assessment has been prepared.

Regulatory Flexibility Act

The Acting Associate Director certifies that this rule will not have a significant economic impact on a substantial number of small entities in accordance with the Regulatory Flexibility Act, 5 U. S. C. 601 *et seq.*, because the rule creates no additional burden, but lists those communities eligible for the sale of flood insurance.

Regulatory Classification

This final rule is not a significant regulatory action under the criteria of section 3(f) of Executive Order 12866 of September 30, 1993, Regulatory Planning and Review, 58 FR 51735.

Paperwork Reduction Act

This rule does not involve any collection of information for purposes of the Paperwork Reduction Act, 44 U.S.C. 3501 et seq.

Executive Order 12612, Federalism

This rule involves no policies that have federalism implications under Executive Order 12612, Federalism, October 26, 1987, 3 CFR, 1987 Comp., p. 252.

Executive Order 12778, Civil Justice Reform

This rule meets the applicable standards of section 2(b)(2) of Executive Order 12778, October 25, 1991, 56 FR 55195, 3 CFR, 1991 Comp., p. 309.

List of Subjects in 44 CFR Part 64

Flood insurance, Floodplains.

Accordingly, 44 CFR part 64 is amended as follows:

PART 64—[AMENDED]

1. The authority citation for Part 64 continues to read as follows:

Authority: 42 U.S.C. 4001 *et seq.*, Reorganization Plan No. 3 of 1978, 3 CFR, 1978 Comp., p. 329; E.O. 12127, 44 FR 19367, 3 CFR, 1979 Comp., p. 376.

§ 64.6 [Amended]

2. The tables published under the authority of § 64.6 are amended as follows:

State/location	Community No.	Effective date of eligibility	Current effective map date
New Eligibles—Emergency Program			
Michigan: Green, charter township of, Mecosta County	260951		Mar. 11, 1996
New York: Victor, village of, Ontario County	361648		Mar. 12, 1996
Nebraska:			
Nuckolls County, unincorporated areas	310461		Mar. 20, 1996
Thayer County, unincorporated areas	310479	.....do	
Texas: Angelina County, unincorporated areas	480007	Mar. 29, 1996	May 22, 1979.
Michigan: Reading, township of, Hillsdale County	260410	Mar. 27, 1996	Oct. 28, 1977.
New Eligibles—Regular Program			
Mississippi: Itawamba County, unincorporated areas	280290	Mar. 12, 1996	Sept. 4, 1991.
Illinois: Crawford County, unincorporated areas	170939	Mar. 14, 1996	June 3, 1986.
Florida:			
Ebro, town of, Washington County	120629	Mar. 19, 1996	June 17, 1991.
Esto, town of, Holmes County	120630	.....do	Dec. 5, 1990.
Noma, town of, Holmes County	120631	.....do	Do.
Reinstatements			
Pennsylvania: White Oak, borough of, Allegheny County.	420089	Jan. 30, 1975, Emerg; Sept. 14, 1979, Reg; Oct. 4, 1995, Susp; Mar. 8, 1996 Rein.	Oct. 4, 1995.
New York:			
Plainfield, town of, Otsego County	361278	May 13, 1977, Emerg; Nov. 4, 1983 Reg; Nov. 4, 1992 Susp; Mar. 12, 1996 Rein.	Nov. 4, 1983.
Taylor, town of, Cortland County	361330	May 19, 1977, Emerg; May 15, 1985 Reg; June 15, 1988 Susp; Mar. 12, 1996 Rein.	May 15, 1985.
Pennsylvania: West Mifflin, borough of, Allegheny County.	420085	Aug. 7, 1974, Emerg; Feb. 15, 1980, Reg; Oct. 4, 1995, Susp; Mar. 13, 1996, Rein.	Oct. 4, 1995.
Florida: Ponce de Leon, town of, Holmes County	120117	Oct. 30, 1975, Emerg; Dec. 5, 1990, Reg; Dec. 5, 1990, Susp; Mar. 19, 1996, Rein.	Dec. 5, 1990.
Minnesota: St. Vincent, city of, Kittson County	270232	Dec. 17, 1974, Emerg; Sept. 2, 1982, Reg; June 2, 1994, Susp; Mar. 19, 1996, Rein.	Sept. 2, 1982.

State/location	Community No.	Effective date of eligibility	Current effective map date
West Virginia: Newburg, town of, Preston County	540268	June 9, 1975, Emerg; Aug. 1, 1987, Reg; Aug. 1, 1987, Susp; Mar. 19, 1996, Rein.	Aug. 1, 1987.
New York: Leicester, village of, Livingston County	361456	Sept. 15, 1980, Emerg; Aug. 27, 1982, Reg; June 15, 1988, Susp; Mar. 21, 1996 Rein.	Aug. 27, 1982.
West Virginia: Paw Paw, town of, Morgan County	540252	Oct. 2, 1975, Emerg; Nov. 2, 1984, Reg; Mar. 5, 1996, Susp; Mar. 22, 1996, Rein.	Mar. 5, 1996.
Nebraska: Elgin, city of, Antelope County	310002	Apr. 18, 1975, Emerg; June 17, 1986, Reg; June 17, 1986, Susp; Mar. 29, 1996, Rein.	June 17, 1986.
Regular Program Conversions			
Region VI			
Texas: Terrell, city of, Kaufman County	480416	Mar. 4, 1996, Suspension Withdrawn	Mar. 4, 1996.
Region II			
New York: Clarence, town of, Erie County	360232	Mar. 5, 1996,Suspension Withdrawn	Mar. 5, 1996.
Region III			
Pennsylvania: North Charleroi, borough of, Washington County.	422137	.....do	Do.
West Virginia:			
Bath, town of, Morgan County	540005	.....do	Do.
Morgan County, unincorporated areas	540144	.....do	Do.
Region V			
Indiana: Tipton, city of, Tipton County	180255	.....do	Do.
Michigan:			
Plymouth, city of, Wayne County	260236	.....do	Jan. 5, 1996.
Plymouth, charter township of, Wayne County	260237	.....do	Do.
Minnesota:			
Aitkin County, unincorporated areas	270628	.....do	Feb. 2, 1996.
Hopkins, city of, Hennepin County	270166	.....do	Dec. 19, 1995.
Wisconsin:			
Cadott, village of, Chippewa County	550043	.....do	Mar. 5, 1996.
Dane County, unincorporated areas	550077	.....do	Do.
Madison, city of, Dane County	550083	.....do	Do.
Middleton, city of, Dane County	550087	.....do	Do.
Region VI			
Louisiana: Duson, town of, Lafayette County	220104	.....do	Feb. 2, 1996.

Notice—New Eligible—Regular Program

The Township of Pembina, North Dakota is participating in the Regular Program under Pembina County's application effective March 12, 1996. Pembina County's Community Identification Number is 380079.

Code for reading third column: Emerg.—Emergency; Reg.—Regular; Rein.—Reinstatement; Susp.—Suspension; With.—Withdrawn.

(Catalog of Federal Domestic Assistance No. 83.100, ''Flood Insurance.'')

Issued: April 18, 1996.

Richard W. Krimm,

Acting Associate Director, Mitigation Directorate.

[FR Doc. 96–10237 Filed 4–24–96; 8:45 am]

BILLING CODE 6718–05–P

FEDERAL COMMUNICATIONS COMMISSION

47 CFR PARTS 1 and 73

[FCC 96–172]

Implementation of Sections 204(a) and 204(c) of the Telecommunications Act of 1996 (Broadcast License Renewal Procedures)

AGENCY: Federal Communications Commission.

ACTION: Final Rule,

SUMMARY: The Commission is implementing Sections 204(a) and 204(c) of the Telecommunications Act of 1996, which eliminate comparative renewal hearings for broadcast applications filed after May 1, 1995 and direct the Commission to grant a broadcaster's renewal application if statutory renewal standards are met. The action is necessary in order to conform the Commission's rules to Section 204(a) and (c) of the Telecommunications Act, and the intended effect of the action is to conform the rules to those statutory provisions.

EFFECTIVE DATE: April 25, 1996.

FOR FURTHER INFORMATION CONTACT: Mania K. Baghdadi, Mass Media Bureau, Policy and Rules Division (202) 418–2130.

SUPPLEMENTARY INFORMATION: This is a synopsis of the Commission's Order (In the Matter of Implementation of Sections 204(a) and 204(c) of the Telecommunications Act of 1996 (Broadcast Renewal Procedures)), adopted April 12, 1996, and released April 12, 1996. The complete text of this *Order* is available for inspection and copying during normal business hours in the FCC Reference Center (Room 239), 1919 M Street, NW., Washington, DC, and also may be purchased from the Commission's copy contractor, International Transcription Service, (202) 857–3800, 2100 M Street, NW., Suite 140, Washington, DC 20037.

Synopsis of Order

1. This Order implements Sections 204(a) and 204(c) of the Telecommunications Act of 1996 (''Telecom Act'') [Pub. L. No. 104–104,

110 Stat. 56 (1996)], which adopts new Section 309(k) of the Communications Act applicable to broadcast renewal applications filed after May 1, 1995, eliminating comparative renewal hearings, establishing instead a new two-step renewal procedure, and directing the Commission to grant a broadcaster's renewal application if statutory renewal standards are met.

2. New Section 309(k) states:

(1) * * * If the licensee of a broadcast station submits an application to the Commission for renewal of such license, the Commission shall grant the application if it finds, with respect to that station, during the preceding term of its license—

(A) the station has served the public interest, convenience, and necessity;

(B) there have been no serious violations by the licensee of this Act or the rules and regulations of the Commission; and

(C) there have been no other violations by the licensee of this Act or the rules and regulations of the Commission which, taken together, would constitute a pattern of abuse.

(2) * * * If any licensee of a broadcast station fails to meet the requirements of this subsection, the Commission may deny the application for renewal in accordance with paragraph (3), or grant such application on terms and conditions as are appropriate, including renewal for a term less than the maximum otherwise permitted.

(3) * * * If the Commission determines, after notice and opportunity for a hearing as provided in subsection (e), that a licensee has failed to meet the requirements specified in paragraph (1) and that no mitigating factors justify the imposition of lesser sanctions, the Commission shall—

(A) issue an order denying the renewal application filed by such licensee under Section 308; and

(B) only thereafter accept and consider such applications for a construction permit as may be filed under section 308 specifying the channel or broadcasting facilities of the former licensee.

(4) * * * In making the determinations specified in paragraph (1) or (2), the Commission shall not consider whether the public interest, convenience, and necessity might be served by the grant of a license to a person other than the renewal applicant.

47 U.S.C. § 309(k).

3. Additionally, Section 204(a)(2) of the Telecom Act amends Section 309(d) of the Communications Act, 47 U.S.C. § 309(d), to make the standard for filing petitions to deny conform to the statutory renewal standards. Thus, the statutory renewal standards are made applicable to the petitioner's required showing and the Commission's consequent findings in the case of a petition to deny a renewal application filed after the statutory effective date.

4. The Telecom Act does not define the terms contained in the renewal standards embodied in Section 309(k), and we likewise do not define those terms in the Order. It is our present intent to continue to apply existing policy statements and case law, refining these as appropriate on a case-by-case basis, in interpreting the statutory terms that govern the new renewal process. If we determine at some future time that further clarification is appropriate, we shall conduct such proceedings as may be warranted.

5. *Administrative Matters.* We are revising the rules as detailed below without providing prior notice and an opportunity for comment. For applications filed after May 1, 1995, the revisions simply reflect the changes mandated by the applicable provisions of the Telecom Act eliminating comparative renewals and codifying certain renewal standards. We find that notice and comment procedures are unnecessary, and that this action therefore falls within the ''good cause'' exception of the Administrative Procedure Act (''APA''). *See* 5 U.S.C. 553(b)(B) (notice requirements inapplicable ''when the agency for good cause . . . finds that notice and public procedure thereon are impracticable, unnecessary, or contrary to the public interest''). We further find for the same reasons that good cause exists to make the rule changes adopted herein effective upon publication of this Order in the Federal Register. *See id.* at 553(d)(3). The rule changes adopted in this Order do not involve discretionary action by the Commission. Rather, they simply reiterate in our rules specific terms set forth in legislation. Additionally, with respect to the revisions that involve rules of agency organization and procedure, the notice and comment requirements of the APA are inapplicable. *See* 5 U.S.C. § 553(b)(A).

6. *Termination of Comparative Renewal Rule Making.* In light of the elimination of the comparative renewal procedure, we will terminate BC Docket No. 81–742, in which the Commission is considering reforming the comparative renewal process. *See Third Further Notice of Inquiry and Notice of Proposed Rule Making* in BC Docket No. 81–742, 4 FCC Rcd 6363 (1989) [57 FR 35357 (August 25, 1989]) and preceding Notices of Inquiry and Notice of Proposed Rule Making cited therein. We believe that it would not represent the most productive use of our resources to conclude Docket No. 81–742 since it will apply only to a limited number of comparative renewal proceedings.

7. *Effective Dates.* Pursuant to the Telecom Act, Section 309(k) will be applied to renewal applications filed after May 1, 1995, and the rule changes made to implement the new renewal provisions of the Telecom Act reflect the statutory effective date. Pending comparative renewal proceedings and mutual exclusivities involving applications filed on or before May 1, 1995 will be concluded pursuant to the current rules, and accordingly, we will leave intact procedural provisions of the current rules that refer to comparative renewal proceedings until those pending proceedings and exclusivities are finally resolved. We wish to reiterate that our failure to amend or eliminate a rule that refers to or applies to comparative renewal proceedings results only from the need to conclude those ongoing proceedings. We wish to make clear that applications filed on or before May 1, 1995 will be subject to our current renewal standards and procedures, while applications filed after May 1, 1995 will be subject to the new renewal provisions adopted in Section 204 of the Telecom Act.

8. *Ordering Clause.* Accordingly, IT IS ORDERED that, pursuant to Section 204 of the Telecommunications Act of 1996, and to Sections 4(i) and 303(r) of the Communications Act of 1934 as amended, 47 U.S.C. §§ 154(i), 303(r), Parts 1 and 73 of the Commission's Rules is amended as set forth below. The rule changes are effective upon publication of this Order in the Federal Register. IT IS FURTHER ORDERED that BC Docket No. 81–742 is hereby terminated.

List of Subjects

47 CFR Part 1

Radio, Television.

47 CFR Part 73

Radio broadcasting, Television broadcasting.

Federal Communications Commission.

William F. Caton,

Acting Secretary.

Rule Changes

Parts 1 and 73 of Title 47 of the Code of Federal Regulations are amended as follows:

PART 1—PRACTICE AND PROCEDURE

1. The authority citation for Part 1 continues to read as follows:

Authority: 47 U.S.C. 151, 154, 303 and 309(j) unless otherwise noted.

2. Section 1.227 is amended by revising paragraph (b)(6) to read as follows:

§ 1.227 Consolidations.

* * * * *

(b) * * *

(6) An application which is mutually exclusive with an application for renewal of license of a broadcast station filed on or before May 1, 1995 will be designated for comparative hearing with such license renewal application if it is substantially complete and tendered for filing no later than the date prescribed in § 73.3516(e).

PART 73—RADIO BROADCAST SERVICES

3. The authority citation for part 73 continues to read as follows:

Authority: 46 U.S.C. 154, 303, 304.

4. Section 73.561 is amended by revising the last sentence of the introductory text of paragraph (b) to read as follows:

§ 73.561 Operating schedule; time sharing.

* * * * *

(b) * * * In order to be considered for this purpose, such an application to share time must be filed no later than the deadline for filing petitions to deny the renewal application of the existing licensee, or, in the case of renewal applications filed by the existing licensee on or before May 1, 1995, no later than the deadline for filing applications in conflict with the such renewal applications.

* * * * *

5. Section 73.1020 is amended by revising paragraph (b) to read as follows:

§ 73.1020 Station license period.

* * * * *

(b) For the cutoff date for the filing of applications mutually exclusive with renewal applications that are filed on or before May 1, 1995 and for the deadline for filing petitions to deny renewal applications, see § 73.3516(e).

6. Section 73.3516 is amended by revising the introductory text of paragraph (e) and paragraph (e)(1) to read as follows:

§ 73.3516 Specification of facilities.

* * * * *

(e) An application for construction permit for a new broadcast station or for modification of construction permit or license of a previously authorized broadcast station will not be accepted for filing if it is mutually exclusive with an application for renewal of license of an existing broadcast station unless the application for renewal of license is filed on or before May 1, 1995 and unless the mutually exclusive construction permit application is tendered for filing by the end of the first day of the last full calendar month of the expiring license term. A petition to deny an application for renewal of license of an existing broadcast station will be considered as timely filed if it is tendered for filing by the end of the first day of the last full calendar month of the expiring license term.

(1) If the license renewal application is not timely filed as prescribed in § 73.3539, the deadline for filing petitions to deny thereto is the 90th day after the FCC gives public notice that it has accepted the late-filed renewal application for filing. In the case of a renewal application filed on or before May 1, 1995, if the license renewal application is not timely filed as prescribed in § 73.3539, the deadline for filing applications mutually exclusive therewith is the 90th day after the FCC gives public notice that it has accepted the late-filed renewal application for filing.

* * * * *

7. Section 73.3523 is amended by revising paragraph (a) to read as follows:

§ 73.3523 Dismissal of applications in renewal proceedings.

(a) An applicant for construction permit, that has filed an application that is mutually exclusive with an application for renewal of a license of an AM, FM or television station (hereinafter competing applicant'') filed on or before May 1, 1995, and seeks to dismiss or withdraw its application and thereby remove a conflict between applications pending before the Commission, must obtain the approval of the Commission.

* * * * *

8. Section 73.3584 is amended by revising the third sentence of paragraph (a) to read as follows:

§ 73.3584 Procedure for filing petitions to deny.

(a) * * * In the case of applications for renewal of license, Petitions to Deny may be filed at any time up to the deadline established in § 73.3516(e). * * *

* * * * *

9. Section 73.3591 is amended by revising the introductory text of paragraph (a), paragraph (c), and adding new paragraph (d) to read as follows.

§ 73.3591 Grants without hearing.

(a) Except for renewal applications filed after May 1, 1995 which will be subject to paragraph (d) of this section, in the case of any application for an instrument of authorization, other than a license pursuant to a construction permit, the FCC will make the grant if it finds (on the basis of the application, the pleadings filed or other matters which it may officially notice) that the application presents no substantial and material question of fact and meets the following requirements:

* * * * *

(c) If a petition to deny the application has been filed in accordance with § 73.3584 and the FCC makes the grant in accordance with paragraph (a) of this section, the FCC will deny the petition and issue a concise statement setting forth the reasons for denial and disposing of all substantial issues raised by the petition.

(d) Renewal applications filed after May 1, 1995 will be governed by the criteria established in 47 U.S.C. § 309(k).

[FR Doc. 96–10169 Filed 4–24–96; 8:45 am]

BILLING CODE 6712–01–P

---

47 CFR Part 76

[CS Docket No. 95–139; DA 96–574]

Cable Television Service; List of Major Television Markets

AGENCY: Federal Communications Commission.

ACTION: Final rule.

SUMMARY: The Commission, through this action, amends its rules regarding the listing of major television markets, to change the designation of the Raleigh-Durham-Goldsboro television market to include the community of Fayetteville, North Carolina. This action, taken at the request of Capital Cities/ABC, Inc., licensee of television station WTVD(TV), channel 11, Durham, North Carolina; Capitol Broadcasting Company, Inc., licensee of television station WRAL(TV), channel 5, Raleigh, North Carolina; Delta Broadcasting, Inc., licensee of television station WKFT(TV), channel 40, Fayetteville, North Carolina; FSF TV, Inc., licensee of television station WRDC(TV), channel 28, Durham, North Carolina; and Paramount Stations Group of Raleigh Durham Inc., licensee of television station WLFL(TV), channel 22, Raleigh, North Carolina and after evaluation of the comments filed in this proceeding, amends the rules to

designate the subject market as the Raleigh-Durham-Goldsboro-Fayetteville, North Carolina television market. With this action, this proceeding is terminated.

EFFECTIVE DATE: May 28, 1996.

FOR FURTHER INFORMATION CONTACT: Vanessa Stallings, Cable Services Bureau, (202) 416–0800.

SUPPLEMENTARY INFORMATION: This is a synopsis of the Commission's Report and Order, Docket 95–139, adopted April 9, 1996 and released April 15, 1996. The full text of this decision is available for inspection and copying during normal business hours in the FCC Reference Center (room 239), 1919 M Street NW., Washington, D.C. 20554, and may be purchased from the Commission's copy contractor, International Transcription Service, (202) 857–3800, 1919 M Street NW., Washington, D.C. 20554.

List of Subjects in 47 CFR Part 76

Cable television.

Federal Communications Commission.

William H. Johnson,

Deputy Chief, Cable Services Bureau.

Rule Changes

Part 76 of Chapter I of Title 47 of the Code of Federal Regulations is amended as follows:

PART 76—CABLE TELEVISION SERVICE

1. The authority citation for Part 76 continues to read as follows:

Authority: Secs. 2, 3, 4, 301, 303, 307, 308, 309, 324A, 48 Stat., as amended, 1064, 1065, 1066, 1081, 1082, 1083, 1084, 1085, 1101; 47 U.S.C. Secs. 152, 153, 154, 301, 303, 307, 308, 309, 532, 533, 535, 542, 543, 544A, 552 as amended, 106 Stat. 1460.

2. Section 76.51 is amended by revising paragraph (b)(73) to read as follows:

§ 76.51 Major television markets.

* * * * *

(b) * * *

(73) Raleigh-Durham-Goldsboro-Fayetteville, North Carolina.

* * * * *

[FR Doc. 96–9794 Filed 4–24–96; 8:45 am]

BILLING CODE 6712–01–P

Proposed Rules

Federal Register
Vol. 61, No. 81
Thursday, April 25, 1996

This section of the FEDERAL REGISTER contains notices to the public of the proposed issuance of rules and regulations. The purpose of these notices is to give interested persons an opportunity to participate in the rule making prior to the adoption of the final rules.

DEPARTMENT OF AGRICULTURE

Federal Crop Insurance Corporation

7 CFR Part 457

RIN 0563–AB03

Common Crop Insurance Regulations; Pear Crop Insurance Provisions

AGENCY: Federal Crop Insurance Corporation.

ACTION: Proposed rule.

SUMMARY: The Federal Crop Insurance Corporation (FCIC) proposes specific crop provisions for the insurance of Pears. The provisions will be used in conjunction with the Common Crop Insurance Policy Basic Provisions which contains standard terms and conditions common to most crops. The intended effect of this action is to provide policy changes to better meet the needs of the insured and to include the current pear endorsement with the Common Crop Insurance Policy for ease of use and consistency of policy terms.

DATES: Written comments, data, and opinions on this proposed rule will be accepted until close of business May 28, 1996 and will be considered when the rule is to be made final. The comment period for information collection under the Paperwork Reduction Act of 1995 continues through June 24, 1996.

ADDRESSES: Interested persons are invited to submit written comments to the Chief, Program Development Branch, Federal Crop Insurance Corporation (FCIC), Farm Service Agency (FSA), United States Department of Agriculture (USDA), 9435 Holmes Road, Kansas City, MO 64131. Written comments will be available for public inspection and copying in room 0324, South Building, USDA, 14th and Independence Avenue SW., Washington, D.C., 8:15 a.m.–4:45 p.m., Monday through Friday.

FOR FURTHER INFORMATION CONTACT: Louise Narber, Program Analyst, Research and Development Division, Product Development Branch, FCIC, FSA, USDA, 9435 Holmes Road, Kansas City, MO 64131, telephone (816) 926–7730.

SUPPLEMENTARY INFORMATION:

Executive Order 12866 and Departmental Regulation 1512–1

This action has been reviewed under United States Department of Agriculture (USDA) procedures established by Executive Order 12866 and Departmental Regulation 1512–1. This action constitutes a review as to the need, currency, clarity, and effectiveness of these regulations under those procedures. The sunset review date established for these regulations is February 1, 2001.

This rule has been determined to be exempt for the purposes of Executive Order 12866 and therefore has not been reviewed by the Office of Management and Budget (OMB).

Paperwork Reduction Act of 1995

The information collection requirements contained in these regulations were previously approved by OMB pursuant to the Paperwork Reduction Act of 1995 (44 U.S.C. Chapter 35) under OMB control number 0563–0003 through September 30, 1998.

The amendments set forth in this proposed rule do not contain additional information collections that require clearance by the Office of Management and Budget under the provisions of 44 U.S.C. Chapter 35.

The title of this information collection is ''Catastrophic Risk Protection Plan and Related Requirements including, Common Crop Insurance Regulations; Pear Crop Insurance Provisions.'' The information to be collected includes: a crop insurance acreage report, an insurance application and a continuous contract. Information collected from the acreage report and application is electronically submitted to FCIC by the reinsured companies. Potential respondents to this information collection are growers of pears that are eligible for Federal crop insurance.

The information requested is necessary for the insurance company and FCIC to provide insurance, provide reinsurance, determine eligibility, determine and collect premiums or other monetary amounts, and pay benefits.

All information is reported annually. The reporting burden for this collection of information is estimated to average 16.9 minutes per response for each of the 3.6 responses from approximately 1,755,015 respondents. The total annual burden on the public for this information collection is 2,676,932 hours.

The comment period for information collections under the Paperwork Reduction Act of 1995 continues through June 24, 1996, for the following: (a) whether the proposed collection of information is necessary for the proper performance of the functions of the agency, including whether the information shall have practical utility; (b) the accuracy of the agency's estimate of the burden of the proposed collection of information; (c) ways to enhance the quality, utility, and clarity of the information to be collected; and (d) ways to minimize the burden of the collection of information on respondents, including through the use of automated collection techniques or other forms of information technology.

Comments should be submitted to the Desk Officer for Agriculture, Office of Information and Regulatory Affairs, Office of Management and Budget (OMB), Washington, D.C. 20503 and to Bonnie Hart, Advisory and Corporate Operations Staff, Regulatory Review Group, Farm Service Agency, P.O. Box 2415, Ag Box 0572, U.S. Department of Agriculture, Washington, D.C. 20013–2415, telephone (202) 690–2857. Copies of the information collection may be obtained from Bonnie Hart at the above address.

Unfunded Mandates Reform Act of 1995

Title II of the Unfunded Mandate Reform Act of 1995 (UMRA), Pub. L. 104–4, establishes requirements for Federal agencies to assess the effects of their regulatory actions on State, local, and tribal governments and the private sector. Under section 202 of the UMRA, FCIC generally must prepare a written statement, including a cost-benefit analysis, for proposed and final rules with ''Federal mandates'' that may result in expenditures to State, local, or tribal governments, in the aggregate, or to the private sector, of $100 million or more in any 1 year. When such a statement is needed for a rule, section 205 of the UMRA generally requires FCIC to identify and consider a reasonable number of regulatory

alternatives and adopt the least costly, more cost-effective or least burdensome alternative that achieves the objectives of the rule.

This rule contains no Federal mandates (under the regulatory provisions of Title II of the UMRA) for State, local, and tribal governments or the private sector. Thus, this rule is not subject to the requirements of sections 202 and 205 of the UMRA.

Executive Order 12612

It has been determined under section 6(a) of Executive Order 12612, Federalism, that this rule does not have sufficient federalism implications to warrant the preparation of a Federalism Assessment. The provisions contained in this rule will not have a substantial direct effect on States or their political subdivisions, or on the distribution of power and responsibilities among the various levels of government.

Regulatory Flexibility Act

This regulation will not have a significant impact on a substantial number of small entities. Under the current regulations, a producer is required to complete an application and acreage report. If the crop is damaged or destroyed, the insured is required to give notice of loss and provide the necessary information to complete a claim for indemnity. If the insured elects to use actual records of acreage and production as the basis for the production guarantee, the insured may elect to report this information on a yearly basis. This regulation does not alter those requirements. Therefore, the amount of work required of the insurance companies and FSA offices delivering and servicing these policies will not increase significantly from the amount of work currently required. This rule does not have any greater or lesser impact on the insured. Therefore, this action is determined to be exempt from the provisions of the Regulatory Flexibility Act (5 U.S.C. 605), and no Regulatory Flexibility Analysis was prepared.

Federal Assistance Program

This program is listed in the Catalog of Federal Domestic Assistance under No. 10.450.

Executive Order 12372

This program is not subject to the provisions of Executive Order 12372 which require intergovernmental consultation with State and local officials. See the Notice related to 7 CFR part 3015, subpart V, published at 48 FR 29115, June 24, 1983.

Executive Order 12778

The Office of the General Counsel has determined that these regulations meet the applicable standards provided in subsections 2(a) and 2(b)(2) of Executive Order 12778. The provisions of this rule will not have a retroactive effect prior to the effective date. The provisions of this rule will preempt State and local laws to the extent such State and local laws are inconsistent herewith. The administrative appeal provisions of the National Appeals Division published in 7 CFR part 11 must be exhausted before action for judicial review may be brought.

Environmental Evaluation

This action is not expected to have a significant impact on the quality of the human environment, health, and safety. Therefore, neither an Environmental Assessment nor an Environmental Impact Statement is needed.

National Performance Review

This regulatory action is being taken as part of the National Performance Review initiative to eliminate unnecessary or duplicative regulations and improve those that remain in force.

Background

FCIC proposes to add to the Common Crop Insurance Regulations (7 CFR part 457) a new section, 7 CFR part 457.111, Pear Crop Insurance Provisions. The provisions will be effective for the 1997 and succeeding crop years. The proposed Pear Crop Insurance provisions will replace the provisions found at 7 CFR part 401.140 (Pear Endorsement). Upon publication of 7 CFR part 457.111 as a final rule, the provisions for insuring pears contained herein will supersede the current provisions contained in 7 CFR part 401.140. By separate rule, FCIC will revise 7 CFR part 401.140 to limit its effect to the 1996 crop year and later remove that section.

This rule makes minor editorial and format changes to improve the Pear Crop Insurance Endorsement's compatibility with the Common Crop Insurance Policy. In addition, FCIC is proposing substantive changes in the provisions for insuring pears as follows:

1. The Pacific Northwest grows several varieties of pears in addition to Green Bartletts; however, other areas primarily grow Green Bartletts. Therefore, varietal groups will be identified in the Special Provisions and all references to type I and type II have been deleted.

2. Section 1—Add definitions for ''culls,'' ''days,'' ''direct marketing,'' ''good farming practices,'' ''interplanted,'' ''irrigated practice,'' ''marketable,'' ''production guarantee (per acre),'' ''varietal group,'' and ''written agreement'' for clarification purposes.

3. Section 2—Specify that optional units may be established by section, section equivalent, or FSA Farm Serial Number; or by acreage located on non-contiguous land, but not by both. This policy is consistent with some other perennial crop provisions. Optional units also may be established by varietal group when authorized by the Special Provisions. The provision in section 7 of the Pear Endorsement that prevented interplanted acreage of type I and type II from being divided into separate units has been deleted because two or more varieties which are interplanted may now be separate units. Production records from each variety are kept separate and many varieties do not mature at the same time. It is not realistic or necessary to allow units by blocks of different varieties but not allow units when different varieties are interplanted within a block.

4. Section 3(a)—Clarify that an insured may select only one price election for all the pears in the county insured under this policy, unless the Special Provisions provide different price elections by varietal group in which case the insured may select one price election for each varietal group designated in the Special Provisions. Each price election chosen for each varietal group must have the same percentage relationship to the maximum price offered by the insurer.

5. Section 3(b)—Add provisions for reporting the age and type, if applicable, of any interplanted perennial crop, its planting pattern, and any other information needed to establish the yield upon which the production guarantee is based. If the insured fails to notify the insurer of factors that may reduce yields from previous levels, the insurer will reduce the production guarantee at any time the insurer becomes aware of damage, removal of trees, or changes in practices. Interplanting is not allowed under the current Pear Endorsement.

6. Section 4—Change the contract change date in California from August 31 to October 31 to be consistent with other perennial crops in California.

7. Section 5—Change the cancellation and termination dates in California from November 20 to January 31 to be consistent with other perennial crops in California.

8. Section 6—Specify that to be insurable, the pears must be grown on trees that have produced an average of at least 5 tons per acre, in at least 1 of

the 4 previous crop years unless the Special Provisions or a written agreement set a lower threshold. Previous provisions required that the type must produce an average of 4 tons of pears per acre of first grade canning or U.S. Number 1 in at least 1 of the 4 previous crop years to be insurable. The change to 5 tons per acre is being proposed as more characteristic of an orchard reaching a level of production which should continue on an up trend. Four tons per acre is not an adequate indicator that the orchard has passed problems typical of a new orchard. The ''of first grade canning or U.S. Number 1'' requirement will be eliminated because it does not include U.S. No. 2 grade pears that are included in the production to count. The provision that required acceptable production records for insurance to attach also will be eliminated because if the insured does not provide acceptable records of production the guarantee may be based on a transitional yield in accordance with Actual Production History regulations published at 7 CFR part 400, subpart G.

9. Section 7—Add a provision to make interplanted pears insurable if planted with another perennial crop unless the insurance provider inspects the acreage and determines it does not qualify to be accepted for insurance coverage. This provision was added to provide insurance coverage to the maximum extent to all pear producers, and to reduce the number of acres that would require coverage under the Non-insured Assistance Program (NAP).

10. Section 8—Modify the insurance period in California so coverage will begin the later of the date the application is accepted or February 1, instead of November 21, since the cancellation and termination dates were changed to January 31 and the contract change date was changed to October 31. Provisions also were added for insuring acreage when an insurable share is acquired or relinquished on or before the acreage reporting date. Under the current Pear Endorsement for acreage acquired (for which an application is in place) on or before the acreage reporting date, coverage would attach at the time the insurer considers the crop inspection as being acceptable provided it was on or after November 21. In the same situation under these new provisions (in all States except California), coverage will have started on November 21 even if the insurer considers the inspection as being acceptable on January 14. Under the current Pear Endorsement for acreage relinquished on or before the acreage reporting date but after coverage had attached, the premium would still be due from the insured even if the insured no longer had an insurable interest. In the same situation under these new provisions, insurance will not be considered to have attached so the premium will not be due unless a transfer of right to an indemnity was completed.

11. Section 9(a)—Add adverse weather conditions as a cause of loss and delete drought, excess wind, freeze, frost, fruit-set failure and hail because they are included by the term adverse weather. Also add a clause to the insurable cause of loss ''failure of the irrigation water supply'' to limit it to a cause of loss covered by this policy.

12. Section 9(b)—Add disease and insect infestation to the excluded causes of loss unless adverse weather prevents the proper application of control measures, causes control measures to be ineffective when properly applied, or no effective control mechanism is available for such disease or insect infestation. These exclusions need to be added for clarification so that insurance coverage is not provided for causes of loss that could be prevented.

13. Section 10—Require the producer to give notice within 3 days of the date harvest should have started if the crop will not be harvested. It also requires the producer to give notice at least 15 days prior to harvest so a preharvest inspection can be made if the insured intends to sell fruit directly to retail customers in any manner. This appraisal may be used to determine the amount of production to count in a loss situation.

14. Section 11—Add a provision explaining when potential production on abandoned acreage will be included in total production to count. If the insured and the insurer agree on potential production on acreage the insured wishes to abandon or no longer care for, the insurance period for that acreage will end. If agreement is not reached, the claim may be deferred if the insured agrees to continue to care for the crop. The insurance provider will make another appraisal when the insured notifies them of further damage or that harvest is generally occurring in the area unless the crop is harvested in which case the harvested production will be used to determine the production to count. If the insured does not continue to care for the crop, the appraisal made prior to deferring the claim will be used to determine the production to count. Also for purposes of settling a claim in all States except California, the production to count is all the harvested and appraised marketable production. There is no adjustment for quality unless the ''Quality Adjustment Endorsement'' is elected. For California, references to the California Tree Fruit Agreement Standards, which is obsolete, have been changed to the California Pear Advisory Board.

15. Section 12—Add provisions for providing insurance coverage by written agreement. FCIC has a long-standing policy of permitting modification of insurance contracts by written agreement. This provision is not documented in the current Pear Endorsement. Section 12 will discuss application for, and duration of, written agreements.

16. Section 13—Provide for a quality adjustment endorsement for all States, except California, if the insured meets the following: has limited or additional coverage, pays the additional premium, the pears are damaged by volcano eruption, frost, freeze, wind or hail, and the endorsement is timely elected. The current pear provisions, without a quality adjustment endorsement, are appropriate in California because the primary marketing intent for pears grown in California is for fresh pack and then to market the pears that do not make U.S. No. 1 as processing or as juice. Also the California pear growers generally have records available for the most recent crop year in the base period. In the Pacific Northwest records for the most recent crop year in the base period are not available as winter pears go into controlled atmospheric storage and may not sell or be graded until well into the next calendar year. Also, the Pacific Northwest has widespread fire blight problems, and the quality adjustment endorsement will allow a more reflective yield of the orchards.

List of Subjects in 7 CFR Part 457

Crop insurance, Pears.

Proposed Rule

Pursuant to the authority contained in the Federal Crop Insurance Act, as amended (7 U.S.C. 1501 *et seq.*), the Federal Crop Insurance Corporation hereby proposes to amend the Common Crop Insurance Regulations (7 CFR 457), effective for the 1997 and succeeding crop years, as follows:

PART 457—[AMENDED]

1. The authority citation for 7 CFR 457 continues to read as follows:

Authority: 7 U.S.C. 1506(l), 1506(p).

2. 7 CFR 457 is amended by adding a new § 457.111 to read as follows:

§ 457.111 Pear Crop Insurance Provisions.

The Pear Crop Insurance Provisions for the 1997 and succeeding crop years are as follows:

United States Department of Agriculture

Federal Crop Insurance Corporation

Pear Crop Provisions

If a conflict exists among the Basic Provisions (§ 457.8), these crop provisions, and the Special Provisions, the Special Provisions will control these crop provisions and the Basic Provisions; and these crop provisions will control the Basic Provisions.

1. Definitions

Culls—Pears that do not meet the requirements of U.S. No. 2 grade or better.

Days—Calendar days.

Direct Marketing—Sale of the insured crop directly to consumers without the intervention of an intermediary such as a wholesaler, retailer, packer, processor, shipper, or buyer. Examples of direct marketing include selling through an on-farm or roadside stand or a farmer's market, and permitting the general public to enter the field(s) for the purpose of picking all or a portion of the crop.

FSA—Farm Service Agency of the United States Department of Agriculture.

Good farming practices—The cultural practices generally in use in the county for the crop to make normal progress toward maturity and produce at least the yield used to determine the production guarantee and are those generally recognized by the Cooperative Extension Service as compatible with agronomic and weather conditions in the county.

Harvest—The picking of mature pears from the trees or the collecting of marketable pears from the ground.

Interplanted—Acreage on which two or more crops are planted in any form of alternating or mixed pattern.

Irrigated practice—A method of producing a crop by which water is artificially applied during the growing season by appropriate systems and at the proper times, with the intention of providing the quantity of water needed to produce at least the yield used to establish the irrigated production guarantee on the irrigated acreage planted to the insured crop.

Marketable—Pear production acceptable for processing or other human consumptive use even if it does not meet any U.S. or applicable state grading standard.

Non-contiguous land—Any land owned by you or rented by you for any consideration other than a share in the insured crop, whose boundaries do not touch at any point. Land that is separated only by a public or private right-of-way, waterway or irrigation canal will be considered to be touching.

Production guarantee (per acre)—The quantity of pears (in tons) determined by multiplying the approved yield per acre by the coverage level percentage you elect, and multiplying the result by any applicable adjustment factor provided for in section 6(b)(f) of the Basic Provisions (§ 457.8).

Ton—Two thousand (2,000) pounds avoirdupois.

Varietal Group—Types of pears with similar characteristics that are grouped for insurance purposes as specified in the Special Provisions.

Written agreement—A written document that alters designated terms of a policy.

2. Unit Division

Unless limited by the Special Provisions, a unit as defined in section 1 (Definitions) of the Basic Provisions (§ 457.8) (basic unit), may be divided into optional units if, for each optional unit you meet all the conditions of this section or if a written agreement to such division exists. Basic units may not be divided into optional units on any basis including, but not limited to, production practice, type, and variety, other than as described in this section. If you do not comply fully with these provisions, we will combine all optional units that are not in compliance with these provisions into the basic unit from which they were formed. We will combine the optional units at any time we discover that you have failed to comply with these provisions. If failure to comply with these provisions is determined to be inadvertent, and the optional units are combined, that portion of the premium paid for the purpose of electing optional units will be refunded to you pro rata for the units combined. All optional units must be identified on the acreage report for each crop year.

(a) The following requirements must be met for each optional unit:

(1) You must have records, which can be independently verified, of acreage and production for each optional unit for at least the last crop year used to determine your production guarantee; and

(2) You must have records of marketed production or measurement of stored production from each optional unit maintained in such a manner that permits us to verify the production from each optional unit or the production from each unit must be kept separate until loss adjustment is completed by us.

(b) Each optional unit must meet one or more of the following criteria as applicable:

(1) *Optional Units by Section, Section Equivalent, or Farm Service Agency (FSA) Farm Serial Number:* Optional units may be established if each optional unit is located in a separate legally identified section. In the absence of sections, we may consider parcels of land legally identified by other methods of measure including, but not limited to Spanish grants, railroad surveys, leagues, labors, or Virginia Military Lands, as the equivalent of sections for unit purposes. In areas that have not been surveyed using the systems identified above, or another system approved by us, or in areas where such systems exist but boundaries are not readily discernable, each optional unit must be located in a separate farm identified by a single FSA Farm Serial Number; or

(2) *Optional Units on Acreage Located on Non-Contiguous Land:* Instead of establishing optional units by section, section equivalent or FSA Farm Serial Number, optional units may be established if each optional unit is located on non-contiguous land.

(3) Optional Units on Acreage by Varietal Group: In addition to, or instead of, establishing optional units by section, section equivalent, FSA Farm Serial Number, or on non-contiguous land, optional units may be established by varietal Group when provided for in the Special Provisions.

3. Insurance Guarantees, Coverage Levels, and Prices for Determining Indemnities

In addition to the requirements of section 3 (Insurance Guarantees, Coverage Levels, and Prices for Determining Indemnities) of the Basic Provisions (§ 457.8):

(a) You may select only one price election for all the pears in the county insured under this policy unless the Special Provisions provide different price elections by varietal group, in which case you may select one price election for each varietal group designated in the Special Provisions. The price election you choose for each varietal group must have the same percentage relationship to the maximum price offered by us for each varietal group. For example, if you choose one hundred percent (100%) of the maximum price election for a specific varietal group, you must also choose one hundred percent (100%) of the

maximum price election for all other varietal groups.

(b) You must report, by the production reporting date designated in section 3 (Insurance Guarantees, Coverage Levels, and Prices for Determining Indemnities) of the Basic Provisions (§ 457.8), by varietal group:

(1) Any damage, removal of trees, or change in practices that may reduce yields from previous levels, and the number of affected acres;

(2) The number of trees on insurable and uninsurable acreage;

(3) The age of the trees and the planting pattern; and

(4) For the first year of insurance for acreage interplanted with another perennial crop and anytime the planting pattern of such acreage is changed:

(i) The age of the interplanted crop, and type if applicable;

(ii) The planting pattern; and

(iii) Any other information that we request in order to establish your approved yield.

We will reduce the yield used to establish your production guarantee as necessary, based on the effect of the interplanted perennial crop, removal of trees, damage, or change in practices on the yield potential of the insured crop. If you fail to notify us of factors that may reduce yields from previous levels, we will reduce your production guarantee as necessary at any time we become aware of the interplanted crop, removal of trees, damage, or change in practices.

4. Contract Changes

The contract change date is October 31 preceding the cancellation date for states with a January 31 cancellation date and August 31 preceding the cancellation date for all other states (see the provisions of section 4 (Contract Changes) of the Basic Provisions (§ 457.8)).

5. Cancellation and Termination Dates

In accordance with section 2 (Life of Policy, Cancellation, and Termination) of the Basic Provisions (§ 457.8), the cancellation and termination dates are:

States	Cancellation and termination dates
California	January 31.
All other states	November 20.

6. Insured Crop

In accordance with section 8 (Insured Crop) of the Basic Provisions (§ 457.8), the crop insured will be all the pears in the county for which a premium rate is provided by the actuarial table:

(a) In which you have a share;

(b) That are of varieties adapted to the area;

(c) That are grown on trees that have produced an average of at least five (5) tons of pears per acre in at least one of the four previous crop years unless the Special Provisions or a written agreement authorizes lesser production; and

(d) That are grown in an orchard that, if inspected, is considered acceptable by us.

7. Insurable Acreage

In lieu of the provisions in section 9 (Insurable Acreage) of the Basic Provisions (§ 457.8), that prohibit insurance attaching to a crop planted with another crop, pears interplanted with another perennial crop are insurable unless we inspect the acreage and determine it does not meet insurability requirements.

8. Insurance Period

(a) In accordance with the provisions of section 11 (Insurance Period) of the Basic Provisions (§ 457.8):

(1) Coverage begins for each crop year on the later of the date we accept your application or:

(i) In California, on February 1; or

(ii) In all other states, on November 21.

(2) The calendar date for the end of the insurance period for each crop year is:

(i) September 15 for Bartlett (green and red) and Star Crimson (Crimson Red) varietal groups; or

(ii) October 15 for all other varietal groups.

(b) In addition to the provisions of section 11 (Insurance Period) of the Basic Provisions (§ 457.8):

(1) If you acquire an insurable share in any insurable acreage on or before the acreage reporting date of any crop year and if we inspect, and consider the acreage acceptable, insurance will be considered to have attached to such acreage on the calendar date for the beginning of the insurance period.

(2) If you relinquish your insurable interest on any acreage of pears on or before the acreage reporting date of any crop year insurance will not be considered to have attached to such acreage for that crop year unless:

(i) A transfer of right to an indemnity or a similar form approved by us is completed by all affected parties; and

(ii) The insurance provider is notified by you or the transferee in writing of such transfer on or before the acreage reporting date.

9. Causes of Loss

(a) In accordance with the provisions of section 12 (Causes of Loss) of the Basic Provisions (§ 457.8), insurance is provided only against the following causes of loss that occur within the insurance period:

(1) Adverse weather conditions;

(2) Fire, unless weeds and other forms of undergrowth have not been controlled or pruning debris has not been removed from the orchard;

(3) Earthquake;

(4) Volcanic eruption; or

(5) Failure of the irrigation water supply, if caused by an insured peril that occurs during the insurance period.

(b) In addition to the causes of loss excluded in section 12 (Causes of Loss) of the Basic Provisions (§ 457.8), we will not insure against damage or loss of production due to:

(1) Disease or insect infestation, unless adverse weather:

(i) Prevents the proper application of control measures or causes properly applied control measures to be ineffective; or

(ii) Causes disease or insect infestation for which no effective control mechanism is available.

(2) Failure of the fruit to color properly; or

(3) Inability to market the pears for any reason other than actual physical damage from an insurable cause specified in this section. For example, we will not pay you an indemnity if you are unable to market due to quarantine, boycott, or refusal of any person to accept production.

10. Duties in the Event of Damage or Loss

In addition to the requirements of section 14 (Duties in the Event of Damage or Loss) of the Basic Provisions (§ 457.8), the following will apply:

(a) You must notify us within 3 days of the date harvest should have started if the crop will not be harvested.

(b) You must notify us at least 15 days before harvest begins if any production from any unit will be marketed directly to consumers. We will conduct a preharvest appraisal that will be used to determine your production. If damage occurs after the preharvest appraisal, and you can provide acceptable records to us that account for all production removed from the unit after our appraisal, we will conduct an additional appraisal that will be used to determine your production. Failure to give timely notice that production will be marketed directly to consumers will result in an appraised amount of production to count of not less than the production guarantee per acre.

(c) If you intend to claim an indemnity on any unit, you must notify us prior to the beginning of harvest so

that we may inspect the damaged production. You must not sell or dispose of the damaged crop until after we have given you written consent to do so. If you fail to meet the requirements of this subsection, all such production will be considered undamaged and included as production to count.

11. Settlement of Claim

(a) We will determine your loss on a unit basis. In the event you are unable to provide production records:

(1) For any optional unit, we will combine all optional units for which acceptable records of production were not provided; or

(2) For any basic unit, we will allocate any commingled production to such units in proportion to our liability on the harvested acreage for each unit.

(b) In the event of loss or damage covered by this policy, we will settle your claim by:

(1) Multiplying the insured acreage by its respective production guarantee;

(2) Multiplying each product by the respective price election;

(3) Summing all such products;

(4) Multiplying the total production to be counted of each varietal group (see subsection 11(c)) by the respective price election;

(5) Summing all such products;

(6) Subtracting this total from the total in (3); and

(7) Multiplying the result by your share.

(c) The total production to count (in tons) from all insurable acreage on the unit will include:

(1) All appraised production as follows:

(i) Not less than the production guarantee per acre for acreage:

(A) That is abandoned;

(B) Damaged solely by uninsured causes; or

(C) For which you fail to provide production records that are acceptable to us;

(ii) Production lost due to uninsured causes;

(iii) Unharvested production; and

(iv) Potential production on acreage that you intend to abandon or no longer care for, if you and we agree on the appraised amount of production. Upon such agreement, the insurance period for that acreage will end. If you do not agree with our appraisal, we may defer the claim only if you agree to continue to care for the crop. We will then make another appraisal when you notify us of further damage or that harvest is generally occurring in the area unless you harvested the crop, in which case we will use the harvested production. If you do not continue to care for the crop, our appraisal made prior to deferring the claim will be used to determine the production to count; and

(2) For all states except California, all harvested and appraised marketable pear production from the insurable acreage.

(3) For California, all harvested and appraised production that:

(i) Meets the standards for first grade canning as defined by the California Pear Advisory Board or for U.S. Number 1 as defined by the United States Standards for Grades of Summer and Fall Pears, or Pears for Processing, or for U.S. Extra Number 1 or U.S. Number 1 as defined by the United States Standards for Grades of Winter Pears; or

(ii) Is accepted by a processor for canning or packing; or

(iii) Is marketable for any purpose.

(4) For California, notwithstanding the terms of 11(c)(3), if the cause of loss was due to an insurable cause, the quantity of production that otherwise would be considered as production to count will be reduced by whichever of the following methods results in the least production to count:

(i) By the excess over ten percent (10%) of the total production from the unit of varieties other than Forelle, Seckel or Winter Nelis that is size 180 or smaller as defined in the United States Standards for Summer and Fall Pears or for Winter Pears; or

(ii) By dividing the value per ton by the highest price election available for the insured varietal group that does not meet the specifications of section 11(c)(3)(i), subtracting this result from 1.000, multiplying this difference by the number of tons of such pears and subtracting this result from the production to count.

12. Written Agreements

Designated terms of this policy may be altered by written agreement. The following conditions will apply:

(a) You must apply in writing for each written agreement no later than the sales closing date, except as provided in subsection (e) of this section.

(b) The application for written agreement must contain all terms of the contract between you and us that will be in effect if the written agreement is not approved.

(c) If approved, the written agreement will include all variable terms of the contract, including, but not limited to, crop type or variety, the guarantee, premium rate, and price election.

(d) Each written agreement will only be valid for 1 year. If the written agreement is not specifically renewed the following year, insurance coverage for subsequent crop years will be in accordance with the printed policy.

(e) An application for written agreement submitted after the sales closing date may be approved if, after a physical inspection of the acreage, it is determined that no loss has occurred and the crop is insurable in accordance with the policy provisions.

13. Pear Quality Adjustment Endorsement

(a) The provisions of this endorsement apply if:

(1) You elect the Pear Quality Adjustment Endorsement on your application or on a form approved by us, on or before the sales closing date for the initial crop year in which you wish to insure your pears under this endorsement. By doing so, you agree to pay the additional premium designated in the actuarial table for this optional coverage; and

(2) This endorsement is not excluded by your policy.

(b) This endorsement is available in all counties for which the actuarial table designates pear premium rates, except for counties in California. This endorsement does not cover acreage insured under the Catastrophic Risk Production Endorsement in any counties.

(c) Pears damaged by volcano eruption; frost; freeze; wind; or hail are eligible for quality adjustment, subject to the following:

(1) If the harvested and appraised production does not grade eighty percent (80%) U. S. No. 2 or better in accordance with applicable United States Standards for Grades of Summer and Fall Pears, United States Standards for Grades of Winter Pears, or United States Standards for Grades of Pears for Processing, as applicable, production will be reduced as follows:

(i) By two percent (2%) for each full one percent (1%) in excess of twenty percent (20%), when twenty-one percent (21%) through sixty percent (60%) of the pears fail the grade standard; and

(ii) By one hundred percent (100%) when more than sixty percent (60%) of the pears fail the grade standard. The difference between the reduced production and the total production will be considered cull production.

(2) Pears that are knocked to the ground by wind or frozen and cannot be packed or marketed as fresh pears will be considered one hundred percent (100%) cull production.

(3) Fifteen percent (15%) of all production that is considered cull production will be production to count.

(4) No reduction in grade will be recognized for any pears that fail the grade standard due to uninsurable causes of loss.

(d) This endorsement may be canceled by either you or us for any succeeding crop year by giving written notice on or before the cancellation date preceding the crop year for which the cancellation of this endorsement is to be effective.

Signed in Washington, D.C., on April 18, 1996.

Kenneth D. Ackerman,

Manager, Federal Crop Insurance Corporation.

[FR Doc. 96–10145 Filed 4–24–96; 8:45 am]

BILLING CODE 3410–FA–P

DEPARTMENT OF TRANSPORTATION

Federal Aviation Administration

14 CFR Part 39

[Docket No. 96–CE–09–AD]

RIN 2120–AA64

Airworthiness Directives; The New Piper Aircraft, Inc. PA24, PA28R, PA30, PA32R, PA34, and PA39 Series Airplanes

AGENCY: Federal Aviation Administration, DOT.

ACTION: Notice of proposed rulemaking (NPRM).

SUMMARY: This document proposes to supersede AD 95–20–07, which currently requires repetitively inspecting the main gear side brace studs for cracks on certain The New Piper Aircraft, Inc. (Piper) PA24, PA28R, PA30, PA32R, PA34, and PA39 series airplanes, and replacing any cracked main gear side brace stud. The proposed action would retain the repetitive inspection and possible replacement requirements of AD 95–20–07, would remove airplanes with a certain main gear side brace assembly configuration from the ''Applicability'' section of the current AD, and would incorporate additional modification and replacement options. Additional information on the design and service history of the affected airplanes concerning this subject received by the Federal Aviation Administration (FAA) after issuance of AD 95–20–07 prompted the proposed action. The actions specified by the proposed AD are intended to prevent a main landing gear collapse caused by main gear side brace stud cracks, which, if not detected and corrected, could result in loss of control of the airplane during landing operations.

DATES: Comments must be received on or before June 25, 1996.

ADDRESSES: Submit comments in triplicate to the Federal Aviation Administration (FAA), Central Region, Office of the Assistant Chief Counsel, Attention: Rules Docket No. 96–CE–09–AD, Room 1558, 601 E. 12th Street, Kansas City, Missouri 64106. Comments may be inspected at this location between 8 a.m. and 4 p.m., Monday through Friday, holidays excepted.

Information that applies to the proposed AD may be examined at the Rules Docket at the address above.

FOR FURTHER INFORMATION CONTACT: Christina Marsh, Aerospace Engineer, FAA, Atlanta Aircraft Certification Office, Campus Building, 1701 Columbia Avenue, suite 2–160, College Park, Georgia 30337–2748; telephone (404) 305–7362; facsimile (404) 305–7348.

SUPPLEMENTARY INFORMATION:

Comments Invited

Interested persons are invited to participate in the making of the proposed rule by submitting such written data, views, or arguments as they may desire. Communications should identify the Rules Docket number and be submitted in triplicate to the address specified above. All communications received on or before the closing date for comments, specified above, will be considered before taking action on the proposed rule. The proposals contained in this notice may be changed in light of the comments received.

Comments are specifically invited on the overall regulatory, economic, environmental, and energy aspects of the proposed rule. All comments submitted will be available, both before and after the closing date for comments, in the Rules Docket for examination by interested persons. A report that summarizes each FAA-public contact concerned with the substance of this proposal will be filed in the Rules Docket.

Commenters wishing the FAA to acknowledge receipt of their comments submitted in response to this notice must submit a self-addressed, stamped postcard on which the following statement is made: ''Comments to Docket No. 96–CE–09–AD.'' The postcard will be date stamped and returned to the commenter.

Availability of NPRMs

Any person may obtain a copy of this NPRM by submitting a request to the FAA, Central Region, Office of the Assistant Chief Counsel, Attention: Rules Docket No. 96–CE–09–AD, Room 1558, 601 E. 12th Street, Kansas City, Missouri 64106.

Discussion

AD 95–20–07, Amendment 39–9386 (60 FR 52073, October 5, 1995), currently requires repetitively inspecting (using liquid penetrant or magnetic particle methods) the main gear side brace studs for cracks on certain Piper PA24, PA28R, PA30, PA32R, PA34, and PA39 series airplanes, and replacing any cracked main gear side brace stud. A minor correction on this action that specified who could accomplish the inspection was published in the Federal Register on November 15, 1995 (60 FR 57333).

The FAA has re-examined all available information related to AD 95–20–07, including additional information received from The New Piper Aircraft, Inc., and owners/operators of the affected airplanes. From this examination, the FAA has determined the following:

—That a third main gear side brace assembly containing the ⅝-inch stud, part number (P/N) 78717–02, with a two-piece bushing, P/N 67026–09, was installed (at manufacture) on Piper Model PA34–200T, serial numbers 34–7670325 through 34–7770372. AD 95–20–07 should not apply to these airplanes with this main gear side brace assembly configuration; and

—That Piper PA28R, PA32R, and PA34 series airplane owners/operators should have the option of incorporating a modification that would eliminate the repetitive inspection requirement of AD 95–20–07. This modification consists of reaming the existing two-piece bushings, P/N 67026–6, to an inside diameter of .624–inch to .625–inch, rechamfering the bushings, and installing the ⅝-inch stud, P/N 78717–02. The owner/operator would have the choice of incorporating this modification, installing a P/N 95643–06/–07/–08/–09 main gear side brace bracket assembly, or continuing to reinspect the main gear side brace assembly.

Based upon the information described above, the FAA has determined that AD action should be taken to prevent a main landing gear collapse caused by main gear side brace stud cracks, which, if not detected and corrected, could result in loss of control of the airplane during landing operations.

Since an unsafe condition has been identified that is likely to exist or

develop in other Piper PA24, PA28R, PA30, PA32R, PA34, and PA39 series airplanes of the same type design, the proposed AD would supersede AD 95–20–07 with a new AD that would (1) retain the requirement of repetitively inspecting the main gear side brace assembly, and replacing any cracked main gear side brace stud. This includes the inspection-terminating replacement contained in AD 95–20–07; (2) remove from the ''Applicability'' section of the current AD the Piper Model PA34–200T airplanes that incorporate a main gear side brace assembly containing the ⅝-inch stud, part number (P/N) 78717–02, with a two-piece bushing, P/N 67026–09; and (3) incorporate, as an option, an inspection-terminating modification for Piper PA28R, PA32R, and PA34 airplanes. This modification consists of reaming the existing two-piece bushings, P/N 67026–6, to an inside diameter of .624–inch to .625–inch, rechamfering the bushings, and installing the ⅝-inch stud, P/N 78717–02.

The FAA estimates that 13,200 airplanes in the U.S. registry would be affected by the proposed AD, that it would take approximately 5 workhours per airplane to accomplish the proposed action, and that the average labor rate is approximately $60 an hour. Based on these figures, the total cost impact of the proposed inspection on U.S. operators is estimated to be $3,960,000. This figure represents the total cost of the proposed initial inspection, and does not reflect costs for any of the proposed repetitive inspections or possible replacements. The FAA has no way of determining how many main gear side brace studs may need replacement or how many repetitive inspections each owner/operator may incur over the life of the airplane.

In addition, the proposed AD would require the same inspections required by AD 95–20–07. The only difference between the proposed AD and AD 95–20–07 is the addition of an inspection-terminating modification option and the elimination from the ''Applicability'' section certain airplanes that incorporate a certain main side brace stud assembly. The proposed AD would not provide any additional cost impacts over that already required by AD 95–20–07.

The regulations proposed herein would not have substantial direct effects on the States, on the relationship between the national government and the States, or on the distribution of power and responsibilities among the various levels of government. Therefore, in accordance with Executive Order 12612, it is determined that this proposal would not have sufficient federalism implications to warrant the preparation of a Federalism Assessment.

For the reasons discussed above, I certify that this action (1) is not a ''significant regulatory action'' under Executive Order 12866; (2) is not a ''significant rule'' under DOT Regulatory Policies and Procedures (44 FR 11034, February 26, 1979); and (3) if promulgated, will not have a significant economic impact, positive or negative, on a substantial number of small entities under the criteria of the Regulatory Flexibility Act. A copy of the draft regulatory evaluation prepared for this action has been placed in the Rules Docket. A copy of it may be obtained by contacting the Rules Docket at the location provided under the caption **ADDRESSES.**

List of Subjects in 14 CFR Part 39

Air transportation, Aircraft, Aviation safety, Safety.

The Proposed Amendment

Accordingly, pursuant to the authority delegated to me by the Administrator, the Federal Aviation Administration proposes to amend 14 CFR part 39 of the Federal Aviation Regulations as follows:

PART 39—AIRWORTHINESS DIRECTIVES

1. The authority citation for part 39 continues to read as follows:

Authority: 49 USC 106(g), 40113, 44701.

§ 39.13 [Amended]

2. Section 39.13 is amended by removing Airworthiness Directive (AD) 95–20–07, Amendment 39–9386, and by adding a new AD to read as follows:

The New Piper Aircraft, Inc.: Docket No. 96–CE–09–AD; Supersedes AD 95–20–07, Amendment 39–9386.

Applicability: The following airplane models and serial numbers, certificated in any category:

1. All serial numbers of Models PA24, PA24–250, PA24–260, PA24–400, PA30, and PA39 airplanes;

2. The following model and serial number airplanes that are not equipped with a part number (P/N) 78717–02 main landing gear side brace stud in both right and left main landing gear sidebrace bracket assemblies:

Model	Serial No.
PA28R–180	28R–30002 through 28R–31135, and 28R–7130001 through 28R–7130013.
PA28R–200	28R–35001 through 28R–35820, and 28R–7135001 through 28R–7635539.
PA28R–201	28R–7737002 through 28R–7737096.
PA28R–201T	28R–7703001 through 28R–7703239.
PA32R–300	32R–7680001 through 32R–7780444.
PA34–200	All serial numbers.
PA34–200T	34–7570001 through 34–7770372.

Note 1: P/N 78717–02 side brace stud was installed at manufacture on Piper Model PA34–200T airplanes, serial numbers 34–7670325 through 34–7770372.

Note 2: This AD applies to each airplane identified in the preceding applicability provision, regardless of whether it has been modified, altered, or repaired in the area subject to the requirements of this AD. For airplanes that have been modified, altered, or repaired so that the performance of the requirements of this AD is affected, the owner/operator must request approval for an alternative method of compliance in accordance with paragraph (e) of this AD. The request should include an assessment of the effect of the modification, alteration, or repair on the unsafe condition addressed by this AD; and, if the unsafe condition has not been eliminated, the request should include specific proposed actions to address it.

Compliance: Required initially as follows, and thereafter as specified in the body of this AD:

1. For the affected Models PA28R–180, PA28R–200, PA28R–201, PA28R–201T, PA32R–300, PA34–200, and PA34–200T airplanes: Within the next 100 hours time-in-service (TIS) after the effective date of this AD or, if the main gear side brace stud has already been inspected or replaced as specified in this AD, within 500 hours TIS after the last inspection or replacement, whichever occurs later.

2. For the affected Models PA24, PA24–250, PA24–260, PA24–400, PA30, and PA39 airplanes: Within the next 100 hours time-in-service (TIS) after the effective date of this AD or, if the main gear side brace stud has already been inspected or replaced as specified in this AD, within 1,000 hours TIS after the last inspection or replacement, whichever occurs later.

To prevent main landing gear (MLG) collapse caused by main gear side brace stud cracks, which, if not detected and corrected, could result in loss of control of the airplane during landing operations, accomplish the following:

Note 3: The paragraph structure of this AD is as follows:

Level 1: (a), (b), (c), etc.
Level 2: (1), (2), (3), etc.
Level 3: (i), (ii), (iii), etc.

Level 2 and Level 3 structures are designations of the Level 1 paragraph they immediately follow.

(a) Remove both the left and right main gear side brace studs from the airplane in accordance with the instructions contained in the Landing Gear section of the maintenance manual, and inspect each main gear side brace stud for cracks, using Type I (fluorescent) liquid penetrant or magnetic particle inspection methods. Figure 1 of this

AD depicts the area of the sidebrace stud shank where the sidebrace stud is to be inspected.

Note 4: All affected Models PA24 and PA24–250 airplanes were equipped at manufacture with P/N 20829–00 main gear side brace studs. All affected Models PA24–260, PA24–400, PA30, and PA39 airplanes were equipped at manufacture with P/N 22512–00 main gear side brace studs. The Appendix included with this AD contains information on determining the P/N of the bracket assembly on the affected PA28R, PA32R, and PA34 series airplanes.

BILLING CODE 4910–13–U

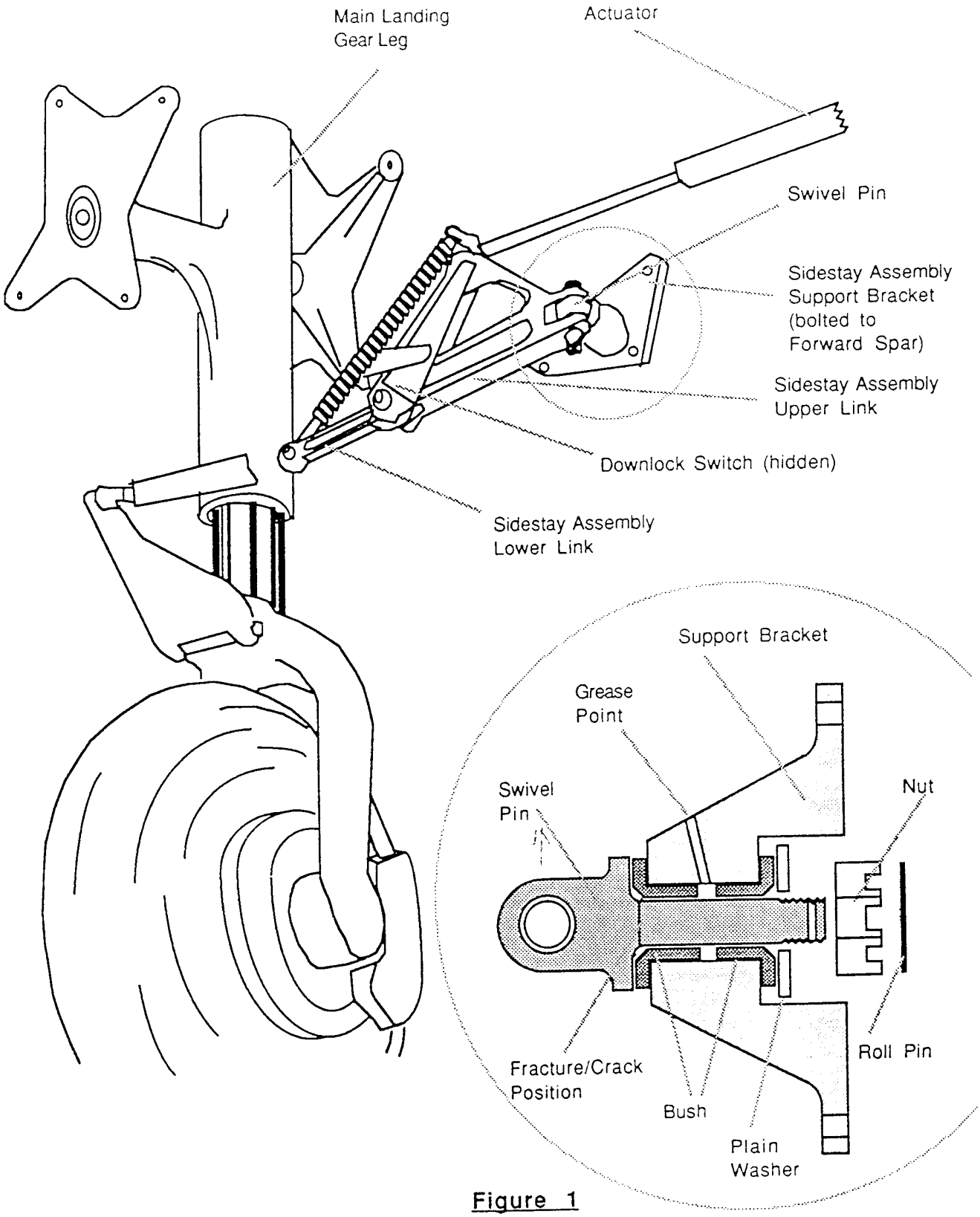

Figure 1

BILLING CODE 4910–13–C

(1) For any main gear side brace stud found cracked, prior to further flight, replace the cracked stud with an FAA-approved serviceable part (part numbers referenced in the table in paragraph (b) of this AD or FAA-approved equivalent) in accordance with the instructions contained in the Landing Gear section of the applicable maintenance manual, and accomplish one of the following, as applicable:

(i) Reinspect and replace (as necessary) as specified in paragraph (b) of this AD; or

(ii) For the affected Models PA28R–180, PA28R–200, PA28R–201, PA28R–201T, PA32R–300, PA34–200, and PA34–200T airplanes, the P/N 95299–00 or 95299–02 main gear side brace studs are no longer manufactured. Install a new main gear side brace stud bracket assembly, P/N 95643–06, P/N 95643–07, P/N 95643–08, or P/N 95643–09, as applicable. No repetitive inspections will be required by this AD for these affected airplane models when this bracket assembly is installed; or

(iii) For the affected Models PA28R–180, PA28R–200, PA28R–201, PA28R–201T, PA32R–300, PA34–200, and PA34–200T airplanes, ream the existing two-piece bushings, P/N 67026–6, to an inside diameter of .624-inch to .625-inch, rechamfer the bushings, and install the ⅝-inch stud, P/N 78717–02. No repetitive inspections will be required by this AD when this action is accomplished. If the bushings cannot be reamed while installed in the bracket (i.e., the brackets are loose), then install a main gear side brace bracket assembly, P/N 95643–06, P/N 95643–07, P/N 95643–08, or P/N 95643–09, as applicable. No repetitive inspections will be required by this AD when this bracket assembly is installed.

(2) For any main gear side brace stud not found cracked, prior to further flight, reinstall the uncracked stud in accordance with the instructions contained in the Landing Gear section of the applicable maintenance manual, and reinspect and replace (as necessary) as specified in paragraph (b) of this AD.

(b) Reinspect both the left and right main gear side brace studs, using Type I (fluorescent) liquid penetrant or magnetic particle inspection methods. Replace any cracked stud or reinstall any uncracked stud as specified in paragraphs (a)(1) and (a)(2) of this AD, respectively:

Part No. installed	TIS inspection interval (hours)	Model airplanes installed on
20829–00	1,000	PA24 and PA24–250.
22512–00	1,000	PA24–260, PA24–400, PA30, and PA39.
95299–00 or 95299–02.	500	PA28R–180, PA28R–200, PA28R–201, PA28R–201T, PA32R–300, PA34–200, and PA34–200T.

Note 5: Accomplishing the actions of this AD does not affect the requirements of AD 77–13–21, Amendment 39–3093. The tolerance inspection requirements of that AD still apply for Piper PA24, PA30, and PA39 series airplanes.

(c) Owners/operators of the affected Models PA28R–180, PA28R–200, PA28R–201, PA28R–201T, PA32R–300, PA34–200, and PA34–200T airplanes may accomplish one of the following at any time to terminate the repetitive inspection requirement of this AD:

(1) Install a main gear side brace bracket assembly, P/N 95643–06, P/N 95643–07, P/N 95643–08, or P/N 95643–09, as applicable, which contains the ⅝-inch diameter main gear side brace stud, P/N 78717–02, and the one-piece bushing, P/N 67026–12; or

(2) Ream the existing two-piece bushings, P/N 67026–6, to an inside diameter of .624-inch to .625-inch, rechamfer the bushings, and install the ⅝-inch stud, P/N 78717–02. If the bushings cannot be reamed while installed in the bracket (i.e., the brackets are loose), then install a main gear side brace bracket assembly, P/N 95643–06, P/N 95643–07, P/N 95643–08, or P/N 95643–09, as applicable.

(d) Special flight permits may be issued in accordance with sections 21.197 and 21.199 of the Federal Aviation Regulations (14 CFR 21.197 and 21.199) to operate the airplane to a location where the requirements of this AD can be accomplished.

(e) An alternative method of compliance or adjustment of the initial or repetitive compliance times that provides an equivalent level of safety may be approved by the Manager, Atlanta Aircraft Certification Office (ACO), Campus Building, 1701 Columbia Avenue, Suite 2–160, College Park, Georgia 30337–2748. The request shall be forwarded through an appropriate FAA Maintenance Inspector, who may add comments and then send it to the Manager, Atlanta ACO.

Note 6: Information concerning the existence of approved alternative methods of compliance with this AD, if any, may be obtained from the Atlanta ACO.

(f) Alternative methods of compliance approved in accordance with AD 95–20–07, Amendment 39–9386, are considered approved as alternative methods of compliance with this AD.

(g) Information related to this AD may be inspected at the FAA, Central Region, Office of the Assistant Chief Counsel, Room 1558, 601 E. 12th Street, Kansas City, Missouri.

(h) This amendment supersedes AD 95–20–07, Amendment 39–9386.

Appendix to Docket No. 96–CE–09–AD—Information To Determine Main Gear Side Brace Stud Assembly Part Number (P/N)

—The P/N 95643–00/–01/–02/–03 bracket assembly contains the 9/16-inch diameter main gear side brace stud, P/N 95299–00/–02, and a two-piece bushing, P/N 67026–6.

—The P/N 95643–06/–07/–08/–09 bracket assembly contains the 5/8-inch diameter main gear side brace stud, P/N 78717–02, and a one-piece bushing, P/N 67026–12.

—Both the one-piece and the two-piece bushing have a visible portion of the bushing flange, i.e., bushing shoulder.

—Whether a one-piece or two-piece bushing is installed may be determined by measuring the outside diameter of the bushing flange with a micrometer (jaws of the caliper must be 3/32-inch or less). The two-piece bushing will have an outside diameter of 1.00 inch and the one-piece bushing will have an outside diameter of 1.128 to 1.130 inches.

—The one-piece bushing contains a visible chamfer in the center of the bushing, and the chamfer in the two-piece bushing is not visible when the stud is installed.

—If P/N 95643–00/–01/–02/–03 bracket assembly is installed or the above information cannot be utilized, the main gear side brace stud will need to be removed from the bracket to determine the shank diameter and main gear side brace stud P/N.

—P/N 95299–00 and P/N 95299–02 main gear side brace studs are 9/16-inch in diameter.

—P/N 95643–00/–01/–02/–03 bracket assembly may have been modified to accommodate the 5/8-inch diameter main gear side brace stud, P/N 78717–02.

Issued in Kansas City, Missouri, on April 19, 1996.

Henry A. Armstrong,

Acting Manager, Small Airplane Directorate, Aircraft Certification Service.

[FR Doc. 96–10167 Filed 4–24–96; 8:45 am]

BILLING CODE 4910–13–U

14 CFR Part 39

[Docket No. 95–NM–115–AD]

Airworthiness Directives; McDonnell Douglas Model DC–8 Series Airplanes Equipped With Swivel-Type Bogie Beams on the Main Landing Gears

AGENCY: Federal Aviation Administration, DOT.

ACTION: Supplemental notice of proposed rulemaking; reopening of comment period.

SUMMARY: This document revises an earlier proposed airworthiness directive (AD), applicable to certain McDonnell Douglas Model DC–8 series airplanes, that would have required an inspection to detect cracking of the swivel bogie beam lugs, and repair, if necessary. For airplanes on which no cracking is

found, that proposed AD also would have required an inspection to detect corrosion of the swivel pin lug surfaces and bores, and modification of the forward bogie beams. That proposal was prompted by reports indicating that swivel pin lugs of the main landing gear (MLG) have failed due to cracks resulting from stress corrosion. The actions specified by this proposed AD are intended to prevent such stress corrosion, which could result in failure of the swivel-type bogie beam of the MLG; this condition could result in collapse of the MLG during landing. This action revises the proposed rule by adding certain repair requirements.

DATES: Comments must be received by May 16, 1996.

ADDRESSES: Submit comments in triplicate to the Federal Aviation Administration (FAA), Transport Airplane Directorate, ANM–103, Attention: Rules Docket No. 95–NM–115–AD, 1601 Lind Avenue SW., Renton, Washington 98055–4056. Comments may be inspected at this location between 9:00 a.m. and 3:00 p.m., Monday through Friday, except Federal holidays.

The service information referenced in the proposed rule may be obtained from McDonnell Douglas Corporation, 3855 Lakewood Boulevard, Long Beach, California 90846, Attention: Technical Publications Business Administration, Department C1–L51 (2–60). This information may be examined at the FAA, Transport Airplane Directorate, 1601 Lind Avenue SW., Renton, Washington; or at the FAA, Transport Airplane Directorate, Los Angeles Aircraft Certification Office (ACO), 3960 Paramount Boulevard, Lakewood, California.

FOR FURTHER INFORMATION CONTACT: Mike Lee, Aerospace Engineer, Airframe Branch, ANM–120L, FAA, Los Angeles Aircraft Certification Office, 3960 Paramount Boulevard, Lakewood, California 90712; telephone (310) 627–5325; fax (310) 627–5210.

SUPPLEMENTARY INFORMATION:

Comments Invited

Interested persons are invited to participate in the making of the proposed rule by submitting such written data, views, or arguments as they may desire. Communications shall identify the Rules Docket number and be submitted in triplicate to the address specified above. All communications received on or before the closing date for comments, specified above, will be considered before taking action on the proposed rule. The proposals contained in this notice may be changed in light of the comments received.

Comments are specifically invited on the overall regulatory, economic, environmental, and energy aspects of the proposed rule. All comments submitted will be available, both before and after the closing date for comments, in the Rules Docket for examination by interested persons. A report summarizing each FAA-public contact concerned with the substance of this proposal will be filed in the Rules Docket.

Commenters wishing the FAA to acknowledge receipt of their comments submitted in response to this notice must submit a self-addressed, stamped postcard on which the following statement is made: ''Comments to Docket Number 95–NM–115–AD.'' The postcard will be date stamped and returned to the commenter.

Availability of NPRMs

Any person may obtain a copy of this NPRM by submitting a request to the FAA, Transport Airplane Directorate, ANM–103, Attention: Rules Docket No. 95–NM–115–AD, 1601 Lind Avenue SW., Renton, Washington 98055–4056.

Discussion

A proposal to amend part 39 of the Federal Aviation Regulations (14 CFR part 39) to add an airworthiness directive (AD), applicable to certain McDonnell Douglas Model DC–8 series airplanes, was published as a notice of proposed rulemaking (NPRM) in the Federal Register on November 1, 1995 (60 FR 55496). That NPRM would have required a magnetic particle inspection to detect cracking of the swivel bogie beam lugs, and repair, if necessary. For airplanes on which no cracking is found, that NPRM also would have required an inspection to detect corrosion of the swivel pin lug surfaces and bores, and modification of the forward bogie beams. That NPRM was prompted by reports indicating that swivel pin lugs of the main landing gear (MLG) have failed due to cracks resulting from stress corrosion. That condition, if not corrected, could result in failure of the swivel-type bogie beam of the MLG, which could result in collapse of the MLG during landing.

Since the issuance of that NPRM, the manufacturer has advised the FAA that the dimensions of the reworked swivel pin lugs of Group I airplanes may exceed the limits specified in the service information cited. The NPRM addressed this condition for Group II airplanes, and included a requirement for the repair of Group II airplanes on which the dimensions of the reworked swivel pin lugs exceed the limits specified in the proposed rule. However, the NPRM did not contain a similar repair requirement for Group I airplanes. The FAA has determined that such an ''on condition'' repair requirement is also necessary for Group I airplanes, and has added this requirement to paragraphs (b)(2)(i) and (b)(2)(ii) of this supplemental NPRM.

Since this change expands the scope of the originally proposed rule, the FAA has determined that it is necessary to reopen the comment period to provide additional opportunity for public comment.

The FAA also has revised paragraph (a) of this proposed rule to clarify that the magnetic particle inspection is a ''one-time'' requirement.

There are approximately 148 McDonnell Douglas Model DC–8 series airplanes of the affected design in the worldwide fleet. The FAA estimates that 97 airplanes of U.S. registry would be affected by this proposed AD, that it would take approximately 83 work hours per airplane to accomplish the proposed actions, and that the average labor rate is $60 per work hour. Based on these figures, the cost impact of the proposed AD on U.S. operators is estimated to be $483,060, or $4,980 per airplane.

The cost impact figure discussed above is based on assumptions that no operator has yet accomplished any of the proposed requirements of this AD action, and that no operator would accomplish those actions in the future if this AD were not adopted.

The regulations proposed herein would not have substantial direct effects on the States, on the relationship between the national government and the States, or on the distribution of power and responsibilities among the various levels of government. Therefore, in accordance with Executive Order 12612, it is determined that this proposal would not have sufficient federalism implications to warrant the preparation of a Federalism Assessment.

For the reasons discussed above, I certify that this proposed regulation (1) is not a ''significant regulatory action'' under Executive Order 12866; (2) is not a ''significant rule'' under the DOT Regulatory Policies and Procedures (44 FR 11034, February 26, 1979); and (3) if promulgated, will not have a significant economic impact, positive or negative, on a substantial number of small entities under the criteria of the Regulatory Flexibility Act. A copy of the draft regulatory evaluation prepared for this action is contained in the Rules Docket. A copy of it may be obtained by contacting the Rules Docket at the

location provided under the caption **ADDRESSES.**

List of Subjects in 14 CFR Part 39

Air transportation, Aircraft, Aviation safety, Safety.

The Proposed Amendment

Accordingly, pursuant to the authority delegated to me by the Administrator, the Federal Aviation Administration proposes to amend part 39 of the Federal Aviation Regulations (14 CFR part 39) as follows:

PART 39—AIRWORTHINESS DIRECTIVES

1. The authority citation for part 39 continues to read as follows:

Authority: 49 U.S.C. 106(g), 40113, 44701.

§ 39.13 [Amended]

2. Section 39.13 is amended by adding the following new airworthiness directive:

Mcdonnell Douglas: Docket 95–NM–115–AD.

Applicability: Model DC–8 airplanes equipped with main landing gears having swivel type bogie beams on which the swivel pin lugs have not been nickel plated, certificated in any category.

Note 1: This AD applies to each airplane identified in the preceding applicability provision, regardless of whether it has been modified, altered, or repaired in the area subject to the requirements of this AD. For airplanes that have been modified, altered, or repaired so that the performance of the requirements of this AD is affected, the owner/operator must request approval for an alternative method of compliance in accordance with paragraph (e) of this AD. The request should include an assessment of the effect of the modification, alteration, or repair on the unsafe condition addressed by this AD; and, if the unsafe condition has not been eliminated, the request should include specific proposed actions to address it.

Compliance: Required as indicated, unless accomplished previously.

To prevent failure of the swivel-type bogie beam of the main landing gear (MLG) due to stress corrosion, which could result in collapse of the MLG during landing, accomplish the following:

(a) Perform a one-time magnetic particle inspection to detect cracking of the swivel bogie beam lugs, in accordance with McDonnell Douglas DC–8 Service Bulletin 32–182, dated January 20, 1995; McDonnell Douglas Service Bulletin DC8–32–182, Revision 01, dated July 21, 1995, or Revision 02, dated August 30, 1995; at the later of the times specified in paragraphs (a)(1) and (a)(2) of this AD.

(1) Prior to the accumulation of 11,600 total flight hours, or within 10 years since the installation of the forward bogie beam of the MLG, whichever occurs first.

(2) Prior to the accumulation of 2,000 flight hours, or 2 years after the effective date of this AD, whichever occurs first.

(b) If no cracking is detected during the inspection required by paragraph (a) of this AD, prior to further flight, perform a visual inspection to detect corrosion in the swivel pin lug surfaces and bores, in accordance with McDonnell Douglas DC–8 Service Bulletin 32–182, dated January 20, 1995; or McDonnell Douglas Service Bulletin DC8–32–182, Revision 01, dated July 21, 1995, or Revision 02, dated August 30, 1995.

Note 2: Particular attention should be paid to the lubrication of the swivel pin lug and the lower swivel pin bushing during regular normal maintenance.

(1) If no corrosion is detected, prior to further flight, accomplish paragraph (b)(1)(i), (b)(1)(ii), (b)(1)(iii), or (b)(1)(iv) of this AD, as applicable, in accordance with the service bulletin.

(i) For Group I airplanes on which the forward bogie beam has not been modified previously: Modify the forward bogie beam in accordance with the actions specified (for Group I airplanes) as Condition 1 of the Accomplishment Instructions of the service bulletin.

(ii) For Group I airplanes on which the forward bogie beam has been modified previously: Modify the forward bogie beam in accordance with the actions specified (for Group I airplanes) as Condition 2 of the Accomplishment Instructions of the service bulletin.

(iii) For Group II airplanes on which the forward bogie beam has not been modified previously: Modify the forward bogie beam in accordance with the actions specified (for Group II airplanes) as Condition 1 of the Accomplishment Instructions of the service bulletin.

(iv) For Group II airplanes on which the forward bogie beam has been modified previously: Modify the forward bogie beam in accordance with the actions specified (for Group II airplanes) as Condition 2 of the Accomplishment Instructions of the service bulletin.

(2) If any corrosion is detected, prior to further flight, accomplish paragraph (b)(2)(i), (b)(2)(ii), (b)(2)(iii), or (b)(2)(iv), as applicable, in accordance with the service bulletin.

(i) For Group I airplanes on which the forward bogie beam has not been modified previously: Modify the forward bogie beam in accordance with the actions specified (for Group I airplanes) as Condition 1 of the Accomplishment Instructions of the service bulletin. If the dimensions of the reworked swivel pin lug exceed the limits specified in Table I of the service bulletin, prior to further flight, repair in accordance with a method approved by the Manager, Los Angeles Aircraft Certification Office (ACO), FAA, Transport Airplane Directorate.

(ii) For Group I airplanes on which the forward bogie beam has been modified previously: Modify the forward bogie beam in accordance with the actions specified (for Group I airplanes) as Condition 2 of the Accomplishment Instructions of the service bulletin. If the dimensions of the reworked swivel pin lug exceed the limits specified in Table I of the service bulletin, prior to further flight, repair in accordance with a method approved by the Manager, Los Angeles ACO.

(iii) For Group II airplanes on which the forward bogie beam has not been modified previously: Modify the forward bogie beam in accordance with the actions specified (for Group II airplanes) as Condition 1 of the Accomplishment Instructions of the service bulletin. If the dimensions of the reworked swivel pin lug exceed the limits specified in Table I of the service bulletin, prior to further flight, repair in accordance with a method approved by the Manager, Los Angeles ACO.

(iv) For Group II airplanes on which the forward bogie beam has been modified previously: Modify the forward bogie beam in accordance with the actions specified (for Group II airplanes) as Condition 2 of the Accomplishment Instructions of the service bulletin. If the dimensions of the reworked swivel pin lug exceed the limits specified in Table I of the service bulletin, prior to further flight, repair in accordance with a method approved by the Manager, Los Angeles ACO.

(c) If any cracking is detected during the inspection required by paragraph (a) of this AD, prior to further flight, repair in accordance with a method approved by the Manager, Los Angeles ACO.

(d) As of the effective date of this AD, no forward bogie beam swivel pin lug shall be installed on any airplane, unless that swivel pin lug has been modified in accordance with McDonnell Douglas DC–8 Service Bulletin 32–182, dated January 20, 1995; or McDonnell Douglas Service Bulletin DC8–32–182, Revision 01, dated July 21, 1995, or Revision 02, dated August 30, 1995.

(e) An alternative method of compliance or adjustment of the compliance time that provides an acceptable level of safety may be used if approved by the Manager, Los Angeles ACO. Operators shall submit their requests through an appropriate FAA Principal Maintenance Inspector, who may add comments and then send it to the Manager, Los Angeles ACO.

Note 3: Information concerning the existence of approved alternative methods of compliance with this AD, if any, may be obtained from the Los Angeles ACO.

(f) Special flight permits may be issued in accordance with sections 21.197 and 21.199 of the Federal Aviation Regulations (14 CFR 21.197 and 21.199) to operate the airplane to a location where the requirements of this AD can be accomplished.

Issued in Renton, Washington, on April 19, 1996.

Darrell M. Pederson,

Acting Manager, Transport Airplane Directorate, Aircraft Certification Service.

[FR Doc. 96–10208 Filed 4–24–96; 8:45 am]

BILLING CODE 4910–13–U

SECURITIES AND EXCHANGE COMMISSION

17 CFR Part 240

[Release No. 33–7283; 34–37132; File No. S7–12–96]

RIN 3235–AG78

Odd-lot Tender Offers by Issuers

AGENCY: Securities and Exchange Commission.

ACTION: Proposed Rule.

SUMMARY: The Securities and Exchange Commission (''Commission'') is publishing for comment a proposed amendment to Rule 13e–4 (''Rule 13e–4'' or ''Rule'') under the Securities Exchange Act of 1934. Rule 13e–4 governs cash tender offers and exchange offers by issuers for their equity securities. The proposed amendment would remove the Rule's requirement that issuer tender offers made to odd-lot holders specify a record date of ownership for eligibility to tender into the offer. The amendment would enable issuers to conduct extended odd-lot tender offers for their equity securities.

DATES: Comments should be submitted on or before May 28, 1996.

ADDRESSES: Comments should be submitted in triplicate to Jonathan G. Katz, Secretary, Securities and Exchange Commission, 450 Fifth Street, N.W., Stop 6–9, Washington, D.C. 20549. Comments also may be submitted electronically at the following E-mail address: rule-comments@sec.gov. All comment letters should refer to File No. S7–12–96; this file number should be included on the subject line if E-mail is used. All comments received will be available for public inspection and copying in the Commission's Public Reference Room, 450 Fifth Street, N.W., Washington, D.C. 20549. Electronically submitted comment letters will be posted on the Commission's Internet web site (http://www.sec.gov).

FOR FURTHER INFORMATION CONTACT: K. Susan Grafton, Special Counsel, or Lauren C. Mullen, Attorney, Office of Risk Management and Control, Division of Market Regulation, Securities and Exchange Commission, 450 Fifth Street, N.W., Stop 5–1, Washington, D.C. 20549, at (202) 942–0772.

SUPPLEMENTARY INFORMATION:

I. Background

A. Odd-lot Tender Offers

Rule 13e–4 under the Securities Exchange Act of 1934 (''Exchange Act'')[1] governs cash tender offers and exchange offers by issuers for their equity securities.[2] In an odd-lot tender offer (''Odd-lot Offer''), the offer to purchase is limited to security holders who own less than 100 shares (''Odd-lot Holders''). The purpose of an Odd-lot Offer generally is to reduce the issuer's disproportionately high cost of servicing small shareholder accounts, and to enable such shareholders to dispose of their securities without incurring brokerage fees.

In light of the limited purposes of Odd-lot Offers and the fact that they are not characterized by large premiums or significant market impact, the majority of these tender offers present minimal potential for fraud and manipulation. Thus, paragraph (h)(5) of Rule 13e–4 excepts Odd-lot Offers from the application of the Rule's requirements, other than the ''all holders'' and ''best price'' provisions contained in paragraph (f)(8) of the Rule.[3]

B. Record Date Requirement

Paragraph (h)(5) of Rule 13e–4 requires issuers making Odd-lot Offers to set a record date prior to the offer's announcement for the purpose of determining a security holder's eligibility to participate in the offer. This provision applies *only* to Odd-lot Offers, and was incorporated into the Rule to prevent holders of round-lots from separating their holdings into eligible odd-lots and tendering them pursuant to the Odd-lot Offer.[4] Also, acceptance of such shares was considered to result in added cost to the issuer without achieving the corresponding benefit from reducing the number of its small shareholder accounts. Furthermore, Odd-lot Holders could be disadvantaged if such behavior were to result in an oversubscription of the Odd-lot Offer, causing *bona fide* Odd-lot Holders to have their securities rejected or prorated by the issuer. Finally, the Commission was concerned that Odd-lot Offers left open indefinitely or for an extended period of time might establish a minimum price for the subject security. In adopting paragraph (h)(5), the Commission expressed its view that the record date requirement would minimize any pegging effect by limiting the number of shares eligible to be purchased by the issuer at the tender offer price.

C. Extended Odd-lot Offers

The requirement of a record date places a practical limitation on the time period that an Odd-lot Offer can be made available, because only those shareholders who were Odd-lot Holders as of the record date may participate. Recently, some issuers have expressed an interest in offering to purchase odd-lots on a continuous, periodic, or extended basis (collectively, ''Extended Odd-lot Offers'') to avoid the costs associated with implementing sequential programs. An issuer desiring to make an Extended Odd-lot Offer must obtain an exemption from the Rule's record date requirement.

Several exemptions have been granted to allow issuers to conduct Extended Odd-lot Offers.[5] Based on information provided to the staff, the Commission preliminarily believes that the record date requirement is no longer necessary for the following reasons:

- Round-lot holders generally do not separate their holdings into odd-lots to participate in Extended Odd-lot Offers.
- Risk of prorationing or over-subscription is absent because Extended Odd-lot Offers do not limit the number of shares that will be accepted.
- There is little manipulative incentive because an Extended Odd-lot Offer typically involves a *de minimis* percentage of an issuer's outstanding shares.
- Because the consideration offered in an Extended Odd-lot Offer typically is based on a uniformly applied formula tied to the market price of the subject security, and not on a fixed-price, it is unlikely that such tender offer could be used to peg the price of a security.
- Odd-lot transactions generally have little influence on the market price of a security, thus, even a fixed-price Extended Odd-lot Offer is unlikely to have a pegging effect on the subject security.

In light of its experience with Extended Odd-lot Offers and the advantages of these programs for issuers as well as for shareholders, the Commission proposes to amend the Rule to eliminate the mandatory record date requirement.

[1] 15 U.S.C. 78a *et seq.*

[2] 17 CFR 240.13e–4.

[3] 17 CFR 240.13e–4(h)(5); see Securities Exchange Act Release No. 19988 (July 21, 1983), 48 FR 34251 (adopting the paragraph now designated as (h)(5) of Rule 13e–4 excepting Odd-lot Offers from the Rule's requirements).

Rule 13e–4(f)(8)(i) requires that the tender offer be open to all security holders of the class of securities subject to the tender offer. 17 CFR 240.13e–4(f)(8)(i). Rule 13e–4(f)(8)(ii) requires that consideration paid to any security holder pursuant to an issuer tender offer be the highest consideration paid to any other security holder during such tender offer. 17 CFR 240.13e–4(f)(8)(ii).

[4] See Securities Exchange Act Release No. 19246 (November 18, 1982), 47 FR 53398, 53400 (proposing adoption of the paragraph now designated as (h)(5) of Rule 13e–4).

[5] See, *e.g.*, Letter regarding American Telephone and Telegraph Company Odd-Lot Program, 1992 SEC No-Act. LEXIS 622 (May 4, 1992); Letter regarding BellSouth Corporation Odd-Lot Program, 1992 SEC No-Act. LEXIS 631 (May 4, 1992).

D. Related Issues

Odd-lot Offers also raise issues under Rules 10b–6 and 10b–13 under the Exchange Act.[6] Rule 10b–6 is an anti-manipulation rule that, subject to certain exceptions, prohibits persons engaged in a distribution of securities from bidding for or purchasing, or inducing others to purchase, such securities, or any related securities, until they have completed their participation in the distribution. The rule is intended to prevent distribution participants and their affiliated purchasers from artificially conditioning the market for the subject security in order to facilitate the offering, and to protect the integrity of the securities market as an independent pricing mechanism. Rule 10b–13 prohibits any person making a cash tender offer or exchange offer for an equity security from purchasing or arranging to purchase such security, or any security immediately convertible into or exchangeable for such security, otherwise than pursuant to the tender or exchange offer, during the period commencing as of the public announcement of the offer and ending on the date when the offer must, by its terms, be accepted or rejected. The rule is intended to eliminate the incentive for the bidder to purchase shares from certain holders otherwise than pursuant to the offer at a more favorable price than the tender offer consideration.

Where an issuer is involved in a distribution, as defined in Rule 10b–6, purchases by the issuer (or its affiliated purchasers) of securities that are the subject of the distribution are restricted, including purchases pursuant to an Odd-lot Offer. For example, the issuer may wish to conduct a public offering during an Odd-lot Offer, or the securities purchased during an Odd-lot Offer may be resold in a manner constituting a distribution. Securities also may need to be purchased in connection with an Odd-lot Offer to satisfy the request of Odd-lot Holders who want to ''round up'' their holdings. In addition, purchases by an issuer conducting an Odd-lot Offer also are restricted by Rule 10b–13, which prohibits purchases of the target security, including purchases in connection with an open market repurchase program, once the Odd-lot Offer is publicly announced and continuing until its expiration.

Issuers frequently have sought exemptive relief from Rules 10b–6 and 10b–13 in connection with their Extended Odd-lot Offers.[7] The Commission is proposing to issue class exemptions from Rules 10b–6[8] and 10b–13 that would permit issuers to conduct Odd-lot Offers while the issuer is engaged in a distribution under Rule 10b–6, to round up odd-lots on behalf of Odd-lot Holders, and to make purchases of its securities otherwise than pursuant to the Odd-lot Offer.[9] The class exemptions from Rules 10b–6 and 10b–13 would be available during any Odd-lot Offer.

II. Request for Comment

The Commission requests that interested persons submit comments on any aspect of the proposed amendment to Rule 13e–4 to eliminate the record date requirement. If the record date requirement is deleted, issuers would not be able to specify a record date in an Odd-lot Offer because of the Rule's ''all holders'' provision. Should Rule 13e–4 retain a provision to permit issuers to specify a record date in an Odd-lot Offer? Commenters should discuss whether there is any potential for round-lot holders to divide their round-lots to participate in Extended Odd-lot Offers. The Commission is interested in information regarding issuers' experiences with Odd-lot Offers, including Extended Odd-lot Offers.

Additionally, the Commission encourages comment on any potential market impact of Extended Odd-lot Offers. Is there any opportunity for an Extended Odd-lot Offer to have a pegging effect on the security's price? Should Extended Odd-lot Offers be limited to those offering a consideration based on a market price formula (*e.g.*, based on the average price per share of the securities subject to the offer)?

Finally, the Commission seeks comment on the proposed class exemptions from Rules 10b–6 and 10b–13.

Comments should be submitted in triplicate to Jonathan G. Katz, Secretary, Securities and Exchange Commission, 450 Fifth Street, NW., Stop 6–9, Washington, DC 20549, and should refer to file No. S7–12–96. Comments also may be submitted electronically at the following E-mail address: rule-comments@sec.gov, and should include the file number on the subject line of the E-mail.

III. Summary of Initial Regulatory Flexibility Act Analysis

The Regulatory Flexibility Act, which became effective on January 1, 1981, imposes procedural steps applicable to agency rulemaking which has a ''significant economic impact on a substantial number of small entities.''[10] The Chairman of the Commission has certified pursuant to the Regulatory Flexibility Act that the proposed amendment to Rule 13e–4, if adopted, will not have a significant economic impact on a substantial number of small entities. This certification, including the reasons therefore, is attached to this release as Appendix A.

IV. Statutory Basis

Pursuant to Sections 3(b), 9(a)(6), 10(b), 13(e), 14(e), and 23(a) of the Exchange Act; 15 U.S.C. 78c(b), 78i(a)(6), 78j(b), 78m(e), 78n(e), and 78w(a), the Commission proposes to amend Rule 13e–4 in Chapter II of Title 17 of the Code of Federal Regulations by amending paragraph (h)(5) of § 240.13e–4.

[6] 17 CFR 240.10b–6 and 17 CFR 240.10b–13.

[7] See, *e.g.*, Letter regarding Society National Bank, 1995 SEC No-Act. LEXIS 912 (December 11, 1995); Letter regarding Armco, Inc., 1995 SEC No-Act. LEXIS 754 (October 20, 1995); Letter regarding Yankee Energy Systems, Inc., 1995 SEC No-Act. LEXIS 142 (January 6, 1995); and Letter regarding El Paso Natural Gas Company, 1994 SEC No-Act. LEXIS 52 (January 7, 1994). The Commission previously has granted exemptions from Rule 10b–13 to permit the issuer, or the broker or trustee for the Odd-lot Offer, to bid for or purchase securities that are the subject of the Odd-lot Offer in order to satisfy a round up feature of the Odd-lot Offer, or to satisfy the requirements of issuer plans, provided that no such purchases are made otherwise than pursuant to the offer from the Odd-lot Holders eligible to participate in the Odd-lot Offer. The proposed exemptions from Rule 10b–13, if issued, would not include a restriction on purchases of securities from eligible Odd-lot Holders. Comment is requested on whether such a restriction should be included.

[8] On April 11, 1996, the Commission issued a release proposing new Regulation M, which would replace Rule 10b–6, among other rules. Securities Exchange Act Release No. 37094 (April 11, 1996). Proposed Rule 102 of Regulation M would permit issuers to purchase odd-lots during a distribution. If the Commission determines to issue the proposed class exemption from Rule 10b–6 for Odd-lot Offers, it may be superseded by adoption of Regulation M.

[9] If adopted, the proposed amendment, along with any class exemptions from Rules 10b–6 and 10b–13, would supersede any prior exemptions granted with respect to Odd-lot Offers. These provisions, however, would not address other issues that may be raised by Odd-lot Offers under the Securities Act of 1933, 15 U.S.C. 77a *et seq.*, or under Sections 15(a) or 14(d) of the Exchange Act, 15 U.S.C. 78o(a) or 78n(d), respectively. See, *e.g.*, Letter regarding Armco, Inc., *supra* note 7.

[10] 5 U.S.C. 601 *et seq.* Although Section 601(b) of the Regulatory Flexibility Act defines the term ''small entity,'' the statute permits agencies to formulate their own definitions. 5 U.S.C. 601(b). The Commission has adopted definitions of the term small entity for purposes of Commission rulemaking in accordance with the Regulatory Flexibility Act. Those definitions are set forth in Rule 0–10, 17 CFR 240.0–10. See Securities Exchange Act Release No. 18452 (January 28, 1982). An issuer, other than an investment company, is a ''small business'' or ''small organization'' under Rule 0–10, if the issuer, on the last business day of its most recent fiscal year, had total assets of $5,000,000 or less.

List of Subjects in 17 CFR Part 240

Brokers, Confidential business information, Fraud, Reporting and recordkeeping requirements, Securities.

Text of the Proposed Amendment

For the reasons set out in the preamble, the Commission is proposing to amend Title 17, Chapter II of the Code of Federal Regulations as follows:

PART 240—GENERAL RULES AND REGULATIONS, SECURITIES EXCHANGE ACT OF 1934

1. The authority citation for part 240 continues to read, in part, as follows:

Authority: 15 U.S.C. 77c, 77d, 77g, 77j, 77s, 77eee, 77ggg, 77nnn, 77sss, 77ttt, 78c, 78d, 78i, 78j, 78*l*, 78m, 78n, 78o, 78p, 78q, 78s, 78w, 78x, 78*ll*(d), 79q, 79t, 80a–20, 80a–23, 80a–29, 80a–37, 80b–3, 80b–4 and 80b–11, unless otherwise noted.

* * * * *

§ 240.13e–4 [Amended]

2. Section 240.13e–4 is amended by removing the phrase ''as of a specified date prior to the announcement of the offer'' from the introductory text of paragraph (h)(5).

Dated: April 19, 1996.

By the Commission.

Jonathan G. Katz,

Secretary.

Note: This Appendix A to the Preamble will not appear in the Code of Federal Regulations.

Appendix A

Regulatory Flexibility Act Certification

I, Arthur Levitt, Chairman of the Securities and Exchange Commission, hereby certify pursuant to 5 U.S.C. 605(b) that the proposed amendment to Rule 13e–4 set forth in Securities Exchange Act Release No. 37132, if promulgated, will not have a significant economic impact on a substantial number of small entities. Specifically, issuers making a tender offer to holders of odd-lots will be excepted from the record date requirements of the rule, and will no longer be required to distinguish between their odd-lot holders on the basis of the dates upon which those security holders acquired their odd-lot holdings. Accordingly, issuers will be relieved of the need to request an exemption from the provisions of the rule to conduct periodic, continuous, or extended odd-lot offers. Although the proposed amendment to Rule 13e–4 is expected to have favorable effects on issuers and small investors, the size of these effects will not have a significant economic impact on a substantial number of small entities.

Dated: April 19, 1996.

Arthur Levitt,

Chairman.

[FR Doc. 96–10243 Filed 4–24–96; 8:45 am]

BILLING CODE 8010–01–P

DEPARTMENT OF LABOR

Mine Safety and Health Administration

30 CFR Parts 70 and 71

RIN: 1219–AA81

Response to National Institute for Occupational Safety and Health (NIOSH) Criteria Document

AGENCY: Mine Safety and Health Administration, Labor.

ACTION: Response to NIOSH criteria document.

SUMMARY: On November 7, 1995, the Mine Safety and Health Administration (MSHA) received a criteria document from the National Institute for Occupational Safety and Health (NIOSH) entitled *Criteria for a Recommended Standard: Occupational Exposure to Respirable Coal Mine Dust* (Criteria Document), which contains a number of recommendations for reducing occupational health risks associated with exposures to respirable coal mine dust and crystalline silica. The Federal Mine Safety and Health Act of 1977 (Mine Act) requires MSHA to issue a public response to such criteria documents.

MSHA has determined that it will respond to the Criteria Document by developing a proposed rule to enhance protection for miners from exposure to respirable coal mine dust and crystalline silica. Although MSHA will begin preliminary work on a proposed rule, the Agency will defer full development of the rule until it can consider the broad range of recommendations expected to be issued in the fall by the Secretary's Advisory Committee to Eliminate Pneumoconiosis among Coal Mine Workers.

FOR FURTHER INFORMATION CONTACT: Patricia W. Silvey, Director, Office of Standards, Regulations, and Variances, MSHA, 4015 Wilson Boulevard, Room 631, Arlington, Virginia 22203, 703–235–1910.

SUPPLEMENTARY INFORMATION:

I. Rulemaking History

The Federal Mine Safety and Health Act of 1977, 30 U.S.C. 801 *et seq.*, (Mine Act) authorizes the National Institute for Occupational Safety and Health (NIOSH) of the U.S. Department of Health and Human Services to recommend that the Secretary of Labor promulgate specific occupational safety and health standards to achieve the objectives of the Mine Act. By means of criteria documents, NIOSH notifies MSHA of its recommendations for health and safety standards. When the Secretary of Labor receives any such recommendations from NIOSH, Section 101(a)(1) of the Mine Act requires him to take one of three actions within 60 days: (1) refer such recommendations to an advisory committee; (2) publish such recommendations as a proposed rule; or (3) publish in the Federal Register his determination not to do so and his reasons therefor.

On November 7, 1995, NIOSH submitted to MSHA a Criteria Document addressing the occupational health risks associated with exposure to respirable coal mine dust and crystalline silica. The criteria document contained a number of recommendations, including that MSHA reduce its permissible exposure limit for respirable coal mine dust and establish a separate standard for crystalline silica.

Although the statutory deadline for MSHA's response fell on January 7, 1996, the funding lapse for the U.S. Department of Labor and the resulting shutdown prevented timely action on this matter. On January 10, 1996, MSHA informed the public by notice in the Federal Register (61 FR 731) that it would respond to the Criteria Document as quickly as possible after the resumption of normal agency operations.

II. Agency Determination

MSHA has determined that it will respond to the NIOSH Criteria Document through the publication of a proposed rule derived from the recommendations in the Document. The proposed rule will address enhanced protections for surface and underground coal miners from exposure to respirable coal mine dust and crystalline silica.

Although MSHA will begin the background work necessary to develop such a rule, the Agency will delay full development of the proposed rule until it has received and considered the recommendations of the Advisory Committee to Eliminate Pneumoconiosis among Coal Mine Workers, which is currently addressing a number of issues that are the subject of recommendations in the Criteria Document. The Advisory Committee was established by the Secretary of Labor on January 31, 1995, and was charged with making recommendations for improved standards and other appropriate action in a number of areas, including permissible exposure limits to eliminate black lung disease and silicosis; the means to control respirable coal mine dust levels; improved monitoring of respirable coal mine dust levels and the role of the miner in that monitoring; and the adequacy of the

operator's current sampling program to determine the actual levels of dust concentrations to which miners are exposed.

The Advisory Committee is chartered through September 30, 1996 (60 FR 55284). MSHA will defer full development of the proposed rule until it has received and thoroughly considered the Advisory Committee recommendations.

Dated: April 17, 1996.

J. Davitt McAteer,

Assistant Secretary for Mine Safety and Health.

[FR Doc. 96–10245 Filed 4–24–96; 8:45 am]

BILLING CODE 4510–43–P

DEPARTMENT OF THE INTERIOR

Minerals Management Service

30 CFR Part 250

RIN 1010–AC07

Flexibility in Keeping Leases in Force Beyond Their Primary Term

AGENCY: Minerals Management Service (MMS), Interior.

ACTION: Proposed rule.

SUMMARY: MMS proposes to amend regulations that specify how Outer Continental Shelf (OCS) lessees can continue their leases beyond their primary term. Changes in industry exploration practices have increased the time necessary to collect and analyze data associated with drilling operations. The proposed changes would increase from 90 to 180 days the time allowed between operations for a lease continued beyond its primary term.

DATES: MMS will consider all comments we receive by June 24, 1996. We will begin reviewing comments at that time and may not fully consider comments we receive after June 24, 1996.

ADDRESSES: Mail or hand-carry comments to the Department of the Interior; Minerals Management Service; Mail Stop 4700; 381 Elden Street; Herndon, Virginia 22070–4817; Attention: Chief, Engineering and Standards Branch.

FOR FURTHER INFORMATION CONTACT: Lawrence H. Ake or John Mirabella, Engineering and Standards Branch, telephone (703) 787–1600.

Author: The principal author of this rule is Lawrence H. Ake, Engineering and Standards Branch, MMS, Herndon, Virginia.

SUPPLEMENTARY INFORMATION:

I. Background

On March 1, 1994, the Department of the Interior (DOI) published a notice in the Federal Register (59 FR 9718–9719), requesting comments and suggestions on DOI agency regulations. In its notice, DOI announced its intention to periodically review its regulations and asked the public to participate in the review. Over 40 responses were received concerning MMS regulations from the public, industry, and Government.

Several comments suggested that MMS make changes to Subpart A of 30 CFR Part 250. These comments suggested allowing 180 days between drilling, well-reworking, or other operations in order to keep a lease in effect beyond its primary term.

MMS held a public meeting in New Orleans on June 12, 1995, to discuss this and other issues. Based on the comments heard at that meeting, as well as those previously received, this notice of proposed rulemaking has been prepared for public comment.

II. Discussion of the Proposed Rule

Under current statute (43 U.S.C. 1337(b)(2)) and MMS regulations (30 CFR 250.13 and 256.37(b)), if no production, drilling, or well-reworking activities occur on the lease during the last 90 days prior to lease expiration and no suspension of operations or production is in effect on the lease, the lease expires by operation of law and lease terms.

Current § 250.13 gives lessees several methods to keep leases in effect beyond their primary term. The most common method is through production of resources and payment of a royalty. Continuous drilling or well-reworking activities without a break of more than 90 days will also keep a lease in effect beyond its primary term. Other methods for extending a lease include receiving a suspension of production (30 CFR 250.10); a suspension of operations (30 CFR 250.10); or participation in a unit which has another lease that is being held beyond its primary term by one of these operations (30 CFR 250.190 (e) and (f)).

Commentors told MMS that although many OCS operations can be ended and recommenced within the present 90-day time allowance, many require considerably more time. The search for oil and gas resources in the OCS has reached a mature phase. Most of the easily found resources have been produced. Industry is now focusing its efforts in deeper waters, subsalt projects, and other areas of extremely complex geology. The proposed changes will allow more time for efficient and expedient production, drilling, and well-reworking operations.

With this rulemaking MMS proposes to increase from 90 to 180 days the time allowed between production, drilling, or well-reworking operations for leases continued beyond their primary term. For example, under the current rule if a lessee ceases production, drilling or well-reworking operations on a lease 60 days before the lease expiration date, he must resume operations within 90 days (i.e., within 30 days after the original lease expiration date). Under this proposed rule, the lessee would have 180 days (i.e., 120 days after the original lease expiration date) within which to resume operations.

Leases that have been continued past their primary term, will remain in force as long as the break in operations is no longer than 180 days. This contrasts with 90 days provided by the current rule.

The proposed changes will allow MMS regulations to more accurately reflect the realities of exploration and production of minerals on the OCS. The proposed changes will also allow the Regional Supervisor to give more flexibility to lessees who are diligently exploring their leases.

Executive Order (E.O.) 12866

This is a significant rule under E.O. 12866 and has been reviewed by the Office of Management and Budget.

Regulatory Flexibility Act

The DOI determined that this proposed rule will not have a significant effect on a substantial number of small entities. Most entities that engage in offshore activities as operators are not small because of the technical and financial resources and experience needed to conduct offshore activities. Small entities are more likely to operate onshore or in State Waters—areas not covered by the proposed regulation. When small entities work in the OCS, they are more likely to be contractors rather than operators. For example, a company that collects geologic and geophysical data might be a small entity. While these contractors must follow the rules governing OCS operations, we are not changing the rules that govern the actual operations on a lease. We are only proposing to modify the rules governing the extent of a lease beyond the primary term. The rule could have a secondary affect. By extending the time available to the lessee, more leases may be active and this could result in an increase in

opportunities for small entities to collect data or perform other services. The added time could also work to benefit smaller companies who may have slower computers and could benefit from a longer time period for review of data.

Paperwork Reduction Act

This proposed rule does not contain any information collection requirements.

Takings Implication Assessment

The DOI determined that this proposed rule does not represent a governmental action capable of interference with constitutionally protected property rights. Thus, DOI does not need to prepare a Takings Implication Assessment pursuant to E.O. 12630, Government Action and interference with constitutionally Protected Property Rights.

Unfunded Mandate Reform Act of 1995

This rule does not contain any unfunded mandates to State, local, or tribal governments or the private sector.

E.O. 12778

The DOI certified to OMB that this proposed rule meets the applicable civil justice reform standards provided in Sections 2(a) and 2(b)(2) of E.O. 12778.

National Environmental Policy Act

The DOI determined that this action does not constitute a major Federal action significantly affecting the quality of the human environment; therefore, an Environmental Impact Statement is not required.

List of Subjects in 30 CFR Part 250

Continental shelf, Environmental impact statements, Environmental protection, Government contracts, Incorporation by reference, Investigations, Mineral royalties, Oil and gas development and production, Oil and gas exploration, Oil and gas reserves, Penalties, pipelines, Public lands—mineral resources, Public lands—rights-of-way, Reporting and recordkeeping requirements, Sulphur development and production, Sulphur exploration, Surety bonds.

Dated: April 3, 1996.

Bob Armstrong,

Assistant Secretary, Land and Minerals Management.

For the reasons set forth in the preamble, Minerals Management Service (MMS) proposes to amend 30 CFR Part 250 as follows:

PART 250—OIL AND GAS AND SULPHUR OPERATIONS IN THE OUTER CONTINENTAL SHELF

1. The authority citation for part 250 continues to read as follows:

Authority: 43 U.S.C. 1334.

2. Section 250.13 is revised to read as follows:

§ 250.13 How Does Production, Drilling, or Well-reworking Affect Your Lease Term?

Continuous production or drilling or well-reworking operations on the lease will allow you to keep a lease past its primary term. The drilling or well-reworking programs must be part of a plan that has as its objective continuous production on the lease. Throughout the remainder of this section (250.13), the term ''operations'' will refer to continuous production, drilling, or well-reworking.

(a) How can I keep my lease in effect if I stop conducting continuous operations during the last 180 days of the primary lease term? If you stop conducting operations during the last 180 days of the primary lease term, you must:

(1) Resume operations on the lease no later than 180 days after the operations ended; or

(2) Ask us for a suspension of operations or production under 30 CFR 250.10, before the 180th day after you stop operations. The Regional Supervisor must approve this request; or

(3) Receive a directed suspension of operations or production from the Regional Supervisor under 30 CFR 250.10 before the 180th day after you stop operations.

(b) How can I keep my lease in effect if I stop conducting operations on a lease that has been continued beyond its primary term? If you stop conducting operations on the lease, you must comply with either paragraph (a) (1), (2), or (3) of this section.

(c) Can I have more than 180 days to resume operations? You may ask the Regional Supervisor in writing to allow you more time to resume operations on a lease continued beyond its primary term, when warranted by operating conditions. In allowing additional time, the Regional Supervisor must determine that the longer period is in the national interest and that it conserves resources, prevents waste, or protects correlative rights.

[FR Doc. 96–10059 Filed 4–24–96; 8:45 am]

BILLING CODE 4310–MR–M

ENVIRONMENTAL PROTECTION AGENCY

40 CFR Part 52

[KS–6–1–6985b, MO–31–1–7153b; FRL–5449–1]

Approval and Promulgation of Implementation Plans; States of Kansas and Missouri

AGENCY: Environmental Protection Agency (EPA).

ACTION: Proposed rule.

SUMMARY: The EPA proposes to approve the State Implementation Plan (SIP) revisions submitted by the states of Kansas and Missouri for the purpose of updating the emissions inventory in the Kansas City Maintenance Plan. The submittals also establish a motor vehicle emissions budget for the purposes of fulfilling the requirements of the Federal Transportation Conformity rule. In the final rules section of the Federal Register, the EPA is approving the state's SIP revision as a direct final rule without prior proposal, because the Agency views this as a noncontroversial revision amendment and anticipates no adverse comments. A detailed rationale for the approval is set forth in the direct final rule. If no adverse comments are received in response to this proposed rule, no further activity is contemplated in relation to this rule. If the EPA receives adverse comments, the direct final rule will be withdrawn and all public comments received will be addressed in a subsequent final rule based on this proposed rule. The EPA will not institute a second comment period on this document. Any parties interested in commenting on this document should do so at this time.

DATES: Comments on this proposed rule must be received in writing by May 28, 1996.

ADDRESSES: Comments may be mailed to Lisa V. Haugen, Environmental Protection Agency, Air Planning and Development Branch, 726 Minnesota Avenue, Kansas City, Kansas 66101.

FOR FURTHER INFORMATION CONTACT: Lisa V. Haugen at (913) 551–7877.

SUPPLEMENTARY INFORMATION: See the information provided in the direct final rule which is located in the rules section of the Federal Register.

Dated: February 9, 1996.

Dennis Grams,

Regional Administrator.

[FR Doc. 96–10133 Filed 4–24–96; 8:45 am]

BILLING CODE 6560–50–P

40 CFR Part 52

[WI68–01–7294b; FRL–5461–8]

Approval and Promulgation of Implementation Plan; Wisconsin; Industrial Adhesives SIP Revision

AGENCY: Environmental Protection Agency (EPA).

ACTION: Proposed rule.

SUMMARY: The EPA proposes to approve a revision to the Wisconsin State Implementation Plan (SIP) for ozone that was submitted on December 11, 1995 and later supplemented on January 12, 1996. This revision consists of a volatile organic compound (VOC) regulation to control emissions from industrial adhesives operations in ozone nonattainment areas classified as moderate or worse. In the final rules of this Federal Register, the EPA is approving this action as a direct final without prior proposal because EPA views this as a noncontroversial action and anticipates no adverse comments. If no adverse comments are received in response to that direct final rule, no further activity is contemplated in relation to this proposed rule. If EPA receives adverse comments, the direct final rule will be withdrawn and all public comments received will be addressed in a subsequent final rule based on this proposed rule. The EPA will not institute a second comment period on this action. Any parties interested in commenting on this document should do so at this time.

DATES: Comments on this proposed action must be received by May 28, 1996.

ADDRESSES: Written comments should be sent to: Carlton T. Nash, Chief, Regulation Development Section, Air Programs Branch (AR–18J), U.S. EPA, 77 West Jackson Boulevard, Chicago, Illinois 60604.

Copies of the proposed SIP revision and EPA's analysis are available for inspection at the U.S. EPA, Region 5, Air and Radiation Division, 77 West Jackson Boulevard, Chicago, Illinois 60604. (Please telephone Douglas Aburano at (312) 353–6960 before visiting the Region 5 Office.)

FOR FURTHER INFORMATION CONTACT: Douglas Aburano, Environmental Engineer, Regulation Development Section, Air Programs Branch (AR–18J), U.S. EPA , Region 5, Chicago, Illinois 60604, (312) 353–6960.

Authority: 42 U.S. C. 7401–7671q.

Dated: April 5, 1996.

Valdas V. Adamkus,

Regional Administrator.

[FR Doc. 96–10130 Filed 4–24–96; 8:45 am]

BILLING CODE 6560–50–P

---

40 CFR Part 52

[FL–64–2–9611b; FRL–5444–5]

Approval and Promulgation of Implementation Plans Florida: Approval of Revisions to the Florida SIP

AGENCY: Environmental Protection Agency (EPA).

ACTION: Proposed rule.

SUMMARY: The EPA proposes to approve the State implementation plan (SIP) revision submitted by the State of Florida which includes amendments to the federally enforceable state operating permit program and the SIP regulations for perchloroethylene dry cleaning facilities. In the final rules section of this Federal Register, the EPA is approving the State's SIP revision as a direct final rule without prior proposal because the Agency views this as a noncontroversial revision amendment and anticipates no adverse comments. A detailed rationale for the approval is set forth in the direct final rule. If no adverse comments are received in response to this proposed rule, no further activity is contemplated in relation to this proposed rule. If EPA receives adverse comments, the direct final rule will be withdrawn and all public comments received will be addressed in a subsequent final rule based on this proposed rule. The EPA will not institute a second comment period on this document. Any parties interested in commenting on this document should do so at this time.

DATES: To be considered, comments must be received by May 28, 1996.

ADDRESSES: Written comments on this action should be addressed to Joey LeVasseur, at the EPA Regional Office listed below. Copies of the documents relative to this action are available for public inspection during normal business hours at the following locations.

Air and Radiation Docket and Information Center (Air Docket 6102), U.S. Environmental Protection Agency, 401 M Street, SW., Washington, DC 20460.

EPA, Region 4 Air Programs Branch, 345 Courtland Street, NE., Atlanta, Georgia 30365.

Florida Department of Environmental Protection, Twin Towers Office Building, 2600 Blair Stone Road, Tallahassee, Florida 32399–2400.

FOR FURTHER INFORMATION CONTACT: Interested persons wanting to examine documents relative to this action should make an appointment with the Region 4 Air Programs Branch at least 24 hours before the visiting day. To schedule the appointment or to request additional information, contact Joey LeVasseur, Regulatory Planning and Development Section, Air Programs Branch, Air, Pesticides & Toxics Management Division, Region 4 EPA, 345 Courtland Street, NE., Atlanta, Georgia 30365. The telephone number is 404/347–3555 ext. 4215. Reference file FL64–2–9611b.

SUPPLEMENTARY INFORMATION: For additional information see the direct final rule which is published in the rules section of this Federal Register.

Dated: January 26, 1995.

Phyllis P. Harris,

Acting Regional Administrator.

[FR Doc. 96–10128 Filed 4–24–96; 8:45 am]

BILLING CODE 6560–50–P

FEDERAL COMMUNICATIONS COMMISSION

47 CFR Chapter I

[CC Docket No. 96–98, FCC 96–182]

Implementation of the Local Competition Provisions in the Telecommunications Act of 1996

AGENCY: Federal Communications Commission.

ACTION: Proposed rule.

SUMMARY: In enacting the Telecommunications Act of 1996 (1996 Act) Congress sought to establish a pro-competitive, deregulatory national policy framework for the telecommunications industry. In adding new sections 251, 252, and 253 to the Communications Act of 1934, Congress set forth a blueprint for ending monopolies in local telecommunications markets. Section 251(d)(1) of the Act directs the Commission to establish rules to implement the requirements of Section 251. In this Notice of Proposed Rulemaking (''NPRM'') the Commission seeks to implement the local competition provisions of the 1996 Act. The Commission's rules that arise from this rulemaking proceeding will serve to promote the procompetitive provisions of the statute. These rules will assist incumbent LECs, telecommunications carriers, state commissions, the Commission, and the courts in defining rights and responsibilities regarding

interconnection, unbundling, resale, and many other issues under the 1996 Act. The rules will relate to such issues as: the negotiation process between incumbent LECs and telecommunications carriers; state commission approval of arbitrated agreements; the Commission's review of arbitrated agreements when a state commission fails to act; judicial review of state commission and this Commission's actions; statements of generally available terms and conditions by Bell Operating Companies; removal of barriers to entry; and BOC entry into interLATA services.

DATES: Comments on all sections other than Dialing Parity, Number Administration, Public Notice of Technical Changes, and Access to Rights of Way, must be submitted on or before May 16, 1996. Reply comments must be filed on or before May 30, 1996. Comments on the remaining sections must be submitted on or before May 20, 1996. Reply comments for these sections must be submitted on or before June 3, 1996. Written comments on the Initial Regulatory Flexibility Analysis must be filed in accordance with the same filing deadlines set for comments on the issues other than Dialing Parity, Number Administration, Public Notice of Technical Changes, and Access to Rights of Way, in the NPRM, but they must have a separate and distinct heading designating them as responses to the Regulatory Flexibility Analysis. Written comments by the public on the proposed and/or modified information collections are due on or before May 16, 1996. Written comments must be submitted by the Office of Management and Budget (OMB) on the proposed and/or modified information collections on or before June 24, 1996.

ADDRESSES: Comments and reply comments should be sent to Office of the Secretary, Federal Communications Commission, 1919 M Street, NW., Room 222, Washington, DC 20554, with a copy to Janice Myles of the Common Carrier Bureau, 1919 M Street, NW., Room 544, Washington, DC 20554. A copy of Comments and Reply Comments on Dialing Parity, Number Administration, Public Notice of Technical Changes, and Access to Rights of Way should be submitted to Gloria Shambley of the Network Services Division, Common Carrier Bureau, 2000 M Street, NW., Washington, DC 20554. Parties should also file one copy of any documents filed in this docket with the Commission's copy contractor, International Transcription Services, Inc., 2100 M Street, NW., Suite 140, Washington, DC 20037. Comments and reply comments will be available for public inspection during regular business hours in the FCC Reference Center, 1919 M Street, NW., Room 239, Washington, DC 20554. Parties are also asked to submit comments and reply comments on diskette. Such diskette submissions would be in addition to and not a substitute for the formal filing requirements addressed above. Parties submitting diskettes should submit them to Janice Myles of the Common Carrier Bureau, 1919 M Street, NW., Room 544, Washington, DC 20554. In addition to filing comments with the Secretary, a copy of any comments on the information collections contained herein should be remitted to Dorothy Conway, Federal Communications Commission, Room 234, 1919 M Street, NW., Washington, DC 20554 or via the Internet to dconway@fcc.gov, and to Timothy Fain, OMB Desk Officer, 10236 NEOB, 725—17th Street, NW., Washington, DC 20503 or via the Internet to fain__t@al.eop.gov.

FOR FURTHER INFORMATION CONTACT: Donald Stockdale or Kalpak Gude at (202) 418–1580, Common Carrier Bureau, Policy and Program Planning Division. For information concerning Dialing Parity, Number Administration, and Public Notice of Technical Changes, contact Lisa Boehley at (202) 418–2320. For Access to Rights of Way contact Tom Power at (202) 416–1188. For additional information concerning the information collections contained in the NPRM, contact Dorothy Conway at (202) 418–0217, or via the Internet at dconway@fcc.gov.

SUPPLEMENTARY INFORMATION: This NPRM contains proposed or modified information collections subject to the Paperwork Reduction Act of 1995 (PRA). It has been submitted to the Office of Management and Budget (OMB) for review under the PRA. OMB, the general public, and other federal agencies are invited to comment on the proposed or modified information collections contained in this proceeding. This is a synopsis of the Commission's Notice of Proposed Rulemaking (FCC 96–182) adopted on April 19, 1996 and released on April 19, 1996. The full text of this Notice of Proposed Rulemaking is available for inspection and copying during normal business hours in the FCC Reference Center (Room 239), 1919 M Street, NW., Washington, DC. The complete text also may be purchased from the Commission's copy contractor, International Transcription Service, Inc., (202) 857–3800, 2100 M Street, NW., Suite 140, Washington, DC 20037.

Paperwork Reduction Act: This NPRM contains either a proposed or modified information collection. The Commission, as part of its continuing effort to reduce paperwork burdens, invites the general public and the Office of Management and Budget (OMB) to comment on the information collections contained in this NPRM, as required by the Paperwork Reduction Act of 1995, Pub. L. No. 104–13. Public and agency comments are due at the same time as comments on the other issues (other than Dialing Parity, Number Administration, Public Notice of Technical Changes, and Access to Rights of Way) in the NPRM; OMB notification of action is due June 24, 1996. Comments should address: (a) Whether the proposed collection of information is necessary for the proper performance of the functions of the Commission, including whether the information shall have practical utility; (b) the accuracy of the Commission's burden estimates; (c) ways to enhance the quality, utility, and clarity of the information collected; and (d) ways to minimize the burden of the collection of information on the respondents, including the use of automated collection techniques or other forms of information technology.

OMB Approval Number: None.

Title: Implementation of the Local Competition Provisions in the Telecommunications Act of 1996, CC Docket No. 96–98.

Form No.: N/A.

Type of Review: New Collection.

Respondents: Business or other for-profit, including small businesses.

Proposed requirement	Number of respondents	Annual hour burden per response
Public notice of technical changes	500	24
Network disclosure reference	500	3
Consumer notification requirement	500	20
Burdens of proof regarding interconnection, unbundling, and collocation	75	36
Submission of agreements to state commission	75	5
Notification that state commission failed to act	75	1
Proposed burden regarding access to rights-of-way requirement	20	5

Proposed requirement	Number of respondents	Annual hour burden per response
Notice of modification of rights-of-way requirement	10,000	3

Total Annual Burden: 56,750.
Estimated Costs per Respondent: 0.
Needs and Uses: The information collections proposed in the NPRM would be to ensure that affected telecommunications carriers fulfill their obligations under the Commnications Act, as amended.

Synopsis of Notice of Proposed Rulemaking

Adopted: April 19, 1996.
Released: April 19, 1996.
Comment Date: May 16, 1996.
Reply Date: May 30, 1996.

(Separate Dates for Dialing Parity/Number Administration/Notice of Technical Changes/Access to Rights of Way)

Comment Date: May 20, 1996.
Reply Date: June 3, 1996.

By the Commission:

Table of Contents

	Paragraph No.
I. Introduction and Overview	1
A. Background	4
B. Overview of Sections 251, 252 and 253	14
II. Provisions of Section 251	25
A. Scope of the Commission's Regulations	25
B. Obligations Imposed by Section 251(c) on ''Incumbent LECs''	42
1. Duty to Negotiate in Good Faith	46
2. Interconnection, Collocation, and Unbundled Elements	49
3. Resale Obligations of Incumbent LECs [251(c)(4)]	172
4. Duty to Provide Public Notice of Technical Changes	189
C. Obligations Imposed on ''Local Exchange Carriers'' by Section 251(b)	195
1. Resale	196
2. Number Portability	198
3. Dialing Parity	202
4. Access to Rights-of-Way	220
5. Reciprocal Compensation for Transport and Termination of Traffic	226
D. Duties Imposed on ''Telecommunications Carriers'' by Section 251(a)	245
E. Number Administration [251(e)]	250
F. Exemptions, Suspensions, and Modifications [251(f)]	260
G. Continued Enforcement of Exchange Access and Interconnection Regulations	262
H. Advanced Telecommunications Capabilities	263
III. Provisions of Section 252	264
A. Arbitration Process	264
B. Section 252(i)	269
IV. Procedural Issues	273
A. *Ex Parte* Presentations	273
B. Regulatory Flexibility Analysis	274
C. Initial Paperwork Reduction Act of 1995 Analysis	288
D. Comment Filing Procedures	289
E. Ordering Clauses	294

I. Introduction and Overview

1. In enacting the Telecommunications Act of 1996, Pub. L. No. 104–104, 110 Stat. 56 (1996 Act), Congress sought to establish ''a pro-competitive, de-regulatory national policy framework'' for the United States telecommunications industry. S. Conf. Rep. No. 104–230, 104th Cong., 2d Sess. 1 (1996) [hereinafter Joint Explanatory Statement]. The statute imposes obligations and responsibilities on telecommunications carriers, particularly incumbent local exchange carriers (LECs), that are designed to open monopoly telecommunications markets to competitive entry. The 1996 Act also includes provisions that are intended to promote competition in markets that already are open to new competitors. The 1996 Act seeks to develop robust competition, in lieu of economic regulation, in telecommunications markets. The Act envisions that removing legal and regulatory barriers to entry and reducing economic impediments to entry will enable competitors to enter markets freely, encourage technological developments, and ensure that a firm's prowess in satisfying consumer demand will determine its success or failure in the marketplace.

2. Congress entrusted to this Agency the responsibility for establishing the rules that will implement most quickly and effectively the national telecommunications policy embodied in the 1996 Act. Those rules should promote the competitive markets envisioned by Congress. As Senator Pressler has observed, ''Progress is being stymied by a morass of regulatory barriers which balkanize the telecommunications industry into protective enclaves. We need to devise a new national policy framework—a new regulatory paradigm for telecommunications—which accommodates and accelerates technological change and innovation.'' The purpose of this proceeding is to adopt rules to implement the local competition provisions of the Communications Act of 1934, as amended by the 1996 Act, particularly Section 251. These rules will establish the ''new regulatory paradigm'' that is essential to achieving Congress' policy goals.

3. This rulemaking is one of a number of interrelated proceedings designed to advance competition, to reduce regulation in telecommunications markets and at the same time to advance and preserve universal service to all Americans. We are especially cognizant of the interrelationship between this proceeding, our recently initiated proceeding to implement the comprehensive universal service provisions of the 1996 Act and our upcoming proceeding to reform our Part 69 access charge rules. *Federal-State Joint Board on Universal Service,* CC Docket No. 96–45, Notice of Proposed Rulemaking and Order Establishing Joint Board, FCC 96–93, 61 FR 10499 (Mar. 14, 1996) (*Universal Service NPRM*) (proposing rules to implement Section 254 of the 1996 Act). This proceeding also is relevant to our price cap regulations and our regulation of the interstate, interexchange marketplace. *Price Cap Performance Review for Local Exchange Carriers,* CC Docket No. 94–1, Second Further Notice of Proposed Rulemaking, FCC 95–393, 60 FR 49539 (Sept. 26, 1996) (*Price Caps Second Further Notice*) (soliciting comments on proposed and other possible changes to the price cap plan to reflect emerging competition in telecommunications services); *Price Cap Performance Review for Local Exchange Carriers,* CC Docket No. 94–1, Fourth Further Notice of Proposed Rulemaking, FCC 95–406, 60 FR 52362 (Oct. 6, 1995) (*Price Caps Fourth Further Notice*) (seeking comment on issues relating to revisions of the long-term price cap plan); *Policy and Rules Concerning the Interstate, Interexchange Marketplace,* CC Docket No. 96–91, Notice of Proposed Rulemaking, FCC 96–123, 61 FR 14717 (Apr. 3, 1996) (proposing to forbear from requiring tariffs for nondominant interexchange carriers). We also plan to initiate a proceeding that will review our existing jurisdictional separations rules in the context of the new statute. Although these proceedings will be conducted in separate dockets, and the 1996 Act prescribes different completion dates for two of the proceedings, we intend to conduct and

conclude all of these proceedings in a comprehensive, consistent, and expedited fashion. We ask commenters in this proceeding to bear in mind the relationship between these parallel proceedings and to frame their proposals within the pro-competitive, deregulatory context of the 1996 Act as a whole.

A. Background

4. In contrast to the 1996 Act, the common carrier provisions of the Communications Act of 1934 were grounded in the notion that interstate telecommunications services would be offered and regulated on a monopoly basis. For decades, state legislatures also followed this traditional approach in regulating LECs' intrastate services. Local and long distance telephone monopolies were created and maintained on the grounds that the provision of telecommunications services was a natural monopoly and, consequently, service could be provided at the lowest cost to the maximum number of consumers through a single regulated telecommunications network. The monopoly paradigm was thought to further goals of universal service, service quality, and reliability. The Modification of Final Judgment (MFJ) that required AT&T to divest the Bell Operating Companies (BOCs) in 1984 was not so much a repudiation as a reduction in the scope of this paradigm. *United States* v. *AT&T*, 552 F. Supp. 131 (D.D.C. 1982), *aff'd sub nom. Maryland* v. *United States*, 460 U.S. 1001 (1983), *vacated sub nom. United States* v. *Western Elect. Co.*, slip op. CA 82–0192 (D.D.C. April 11, 1996). It reflected the judgment that the markets for interexchange services, telecommunications equipment and information services could become competitive. At the same time, the local exchange continued to be treated as a natural monopoly that required rigorous regulatory oversight by state and federal authorities.

5. Even as the MFJ was implemented, academic criticism of the natural monopoly model for the local network was developing. During the past 12 years, many commenters and businesses have asserted that technological innovation has eroded any arguable natural monopoly in the local exchange, and that government should eliminate any legal impediments to entry. This view is now embodied in the 1996 Act. The extent to which it can be proved in the marketplace depends on the capabilities of inventors, entrepreneurs, and financiers, as well as this Commission and its state counterparts. At the time the 1996 Act was signed, 19 states had in place some rules opening local exchange markets to competition, including seven states in which competing firms had already begun to offer switched local service. Even these 19 states, however, vary widely in their efforts to promote competitive entry into local markets. Moreover, as of 1996, more than 30 states had not adopted laws or regulations providing for local competition. Many of those states that had not adopted laws or regulations permitting local competition had provisions that specifically limited competitive entry into local telecommunications markets. Section 253(a) of the 1996 Act prohibits these affirmative legal barriers to entry, and authorizes the Commission to preempt enforcement of such entry barriers.

6. We believe that, in enacting the 1996 Act, Congress recognized that although removing legal barriers to entry is necessary, it is still not sufficient to enable competition to replace monopoly in the local exchange. Congress acknowledged that incumbent LECs have constructed and put in place high quality, reliable, redundant local networks that can provide virtually ubiquitous service, and that they possess an approximate 99.7 percent share of the local market as measured by revenues. Because of this existing infrastructure, an incumbent LEC typically can serve a new customer at a much lower incremental cost than could a new entrant that is denied access to the incumbent LEC's facilities, and thereby is denied access to as many central office switches and as much trunking and subscriber loops as the incumbent LEC operates. Moreover, because virtually all existing customers subscribe to the incumbent LEC, a consumer of local switched service would not subscribe to a new entrant's network if the customer could not complete calls to the incumbent LEC's end users. As Congress appeared to recognize in enacting section 251, if the incumbent LEC has no obligation to interconnect and to arrange for mutual transport and termination of calls, it could effectively block or greatly retard entry into switched local service by using its economies of scale and network externalities as impediments to entry.

7. Congress expressly recognized that ''it is unlikely that competitors will have a fully redundant network in place when they initially offer local service, because the investment necessary is so significant.'' AT&T, for example, in filings before the Commission has estimated that it would have to invest approximately $29 billion to construct new facilities in local markets in order to be able to provide full facilities to reach 20 percent of the 117 million access lines served by the BOCs. Similarly, cable and wireless systems will require substantial investment before either is capable of providing a widespread substitute for wireline telephony services.

8. In the 1996 Act, Congress boldly moved to restructure the local telecommunications market so as to remove economic impediments to efficient entry that existed under the monopoly paradigm. In order to offset the economies of scale and network externalities that would inhibit efficient entry of competitors into markets currently monopolized by incumbent LECs, the 1996 Act requires those LECs to offer interconnection and network elements on an unbundled basis, and imposes a duty to establish reciprocal compensation arrangements for the transport and termination of calls. As the 1996 Act further recognizes, these duties of incumbent LECs are only meaningful in conjunction with the Act's limitations on the rates that can be charged; otherwise, an incumbent LEC could offer interconnection, unbundling, and transport and termination, but at prices that perpetuate its market power. To constrain the incumbent LEC's ability to perpetuate its market power through the pricing of interconnection and unbundled elements, Congress specified that the prices for such transactions should be cost-based and just and reasonable. By freeing new entrants from having to build facilities that totally duplicate the LECs' networks, the 1996 Act has dramatically increased the opportunities for competitive entry and minimized the otherwise overwhelming competitive advantages of large established carriers. We also note that the new law provides for exemption, suspension, or modification of certain requirements, under certain conditions, with respect to small and rural LECs.

9. Different entrants may be expected to pursue different strategies that reflect their competitive advantages in the markets they seek to target. For example, interexchange carriers and competitive access providers may combine their own facilities with unbundled loops and other LEC elements and perhaps augment their own loop facilities over time. Cable systems may choose to develop more extensive networks within their service areas, and thus require fewer unbundled elements from LECs; but, like all entrants, they will require termination arrangements with incumbent LECs. Outside their franchise areas, or in areas not passed by their existing systems,

cable companies will need to find some other technique for offering telecommunications services, such as resale of incumbent LEC services or purchase of unbundled LEC elements. Because of local franchising, a given cable operator may not have cable facilities in all parts of the geographic market in which it intends to offer telecommunications service.

10. In addition to imposing interconnection, termination, and unbundling requirements in the 1996 Act, Congress also provided for entrants to be able to resell a LEC's retail services. Even if an entrant planned to construct its own facilities, it may still face marketing disadvantages, because of the time it takes to construct a new network. Resale enables new entrants to offer at the outset a conventional service to all customers currently served by an incumbent LEC. Some entrants also may choose to rely on resale as part of a longer term strategy as well.

11. At the same time, Congress plainly intended for LECs in the future to be vigorous competitors, to continue to offer high quality service, and to play a vital role in delivering universal service to all Americans. Nothing in the 1996 Act suggests that Congress intended to divest incumbent LECs of all or part of their local networks, even if some portions continue to be natural monopolies. Indeed, the Act expressly confirms that incumbent LECs may earn a reasonable profit for the interconnection services and network elements they provide.

12. Consistent with this perspective on competition, we also note that the purpose and, given proper implementation, the likely effect of the unbundling and other provisions of the 1996 Act is not to ensure that entry shall take place irrespective of costs, but to remove both the statutory and regulatory barriers and economic impediments that inefficiently retard entry, and to allow entry to take place where it can occur efficiently. This entry policy is competitively neutral; it is pro-competition, not pro-competitor. Our discussion of the 1996 Act in this and other proceedings, therefore, is phrased in terms of removing statutory and regulatory barriers and economic impediments, in permitting efficient competition to occur wherever possible, and replicating competitive outcomes where competition is infeasible or not yet in place.

13. This foregoing discussion has focused on obligations created by the 1996 Act for incumbent LECs in order to reduce economic impediments to efficient market entry by new competitors. The statute, however, also creates general duties for all telecommunications carriers, and obligations for all local exchange carriers, whether classified as ''incumbent'' LECs or not. These provisions are also important to facilitating competitive local telecommunications markets. We discuss those provisions below.

B. Overview of Sections 251, 252 and 253

14. In adding new sections 251, 252 and 253 to the Communications Act of 1934, Congress set forth a blueprint for ending monopolies in local telecommunications markets. As discussed above, sections 251 (b) and (c) impose specific obligations on incumbent LECs to open their networks to competitors. Section 251(b)(5), in particular, requires all LECs, including incumbent LECs, to ''establish reciprocal compensation arrangements for the transport and termination of telecommunications.''

15. Section 251(c) imposes on incumbent LECs three key and separate duties. They must make available to new entrants and existing competitors in local telecommunications markets interconnection services and unbundled network elements, and offer for resale at wholesale rates any telecommunications service that the incumbent LEC provides at retail to subscribers. Specifically, section 251(c)(2) requires an incumbent LEC to interconnect with any requesting telecommunications carrier at any technically feasible point in the LEC's network for the transmission and routing of telephone exchange service and exchange access.

Section 251(c)(3) requires incumbent LECs to unbundle their network facilities and features so that an entrant can choose among them, combine them with any of its own facilities, and offer services that will compete with the incumbent's offerings. In addition, section 251(c)(4) directs an incumbent LEC to offer for resale, at a wholesale rate, any telecommunications service the incumbent LEC offers to end users at retail. Viewed as a whole, the statutory scheme of section 251 (b) and (c) enables entrants to use interconnection, unbundled elements, and/or resale in the manner that the entrant determines will advance its entry strategy most effectively.

16. Section 251(d)(1) directs the Commission to establish rules to implement the requirements of section 251, including the core interconnection, unbundling, and resale provisions of section 251(c). These rules, however, have much broader implications than merely implementing the requirements of section 251. In fact, these rules are central to a number of functions contemplated by the 1996 Act. As discussed below, these rules in varying ways relate to such issues as: (1) the voluntary negotiation process between incumbent LECs and telecommunications carriers; (2) the arbitration process; (3) state commission approval of arbitrated agreements; (4) the FCC's review of arbitrated agreements when a state commission fails to act; (5) judicial review of state commissions' and this Commission's actions; (6) statements of generally available terms and conditions by BOCs; (7) removal of barriers to entry; and (8) BOC entry into interLATA services.

17. Section 251(f)(1) provides that the obligations under section 251(c) shall not apply to a rural telephone company, as defined in the 1996 Act, ''until (i) such company has received a bona fide request for interconnection, services, or network elements, and (ii) the State commission determines * * * that such request is not unduly economically burdensome, is technically feasible, and is consistent with section 254 (other than sections (b)(7) and (c)(1)(D) thereof.'' Section 251(f)(2) provides that a LEC ''with fewer than 2 percent of the Nation's subscriber lines'' may petition the state commission for a suspension or modification of the requirements set forth in sections 251 (b) and (c).

18. Section 252 sets forth the procedures that incumbent LECs and new entrants must follow to transform the requirements of section 251 into binding contractual obligations. Under section 252, incumbent LECs and new entrants initially must seek to agree on the terms and conditions under which LEC facilities and services are made available to the new entrant. To the extent that the resulting agreements are based on voluntary negotiations rather than state arbitration, those agreements are not required to satisfy the provisions of sections 251 and our regulations issued thereunder, but such agreements must not discriminate against a telecommunications carrier not a party to the agreement, and all portions must be consistent with the public interest, convenience, and necessity.

19. If an incumbent LEC and requesting carrier are unable to reach a negotiated agreement, section 252(c) authorizes a state commission to resolve disputed issues by arbitration, and requires the state commission to ''ensure that such resolution and conditions meet the requirements of section 251, including the regulations prescribed by the Commission pursuant to section 251.'' The Commission's section 251 rules also guide states in

their subsequent review of arbitrated arrangements. A state commission may reject an arbitrated agreement (or any portion thereof) pursuant to section 252(e)(2)(B) ''if it finds that the agreement does not meet the requirements of section 251, including the regulations prescribed by the Commission pursuant to section 251.'' The rules adopted in this proceeding also will guide the Commission in a similar context. In the event that the Commission must assume the responsibility of a state commission under section 252(e)(5), the section 251 rules will provide the substantive standards the Commission will apply to arbitrate and approve agreements pursuant to section 252.

20. Thus, the statutory scheme of sections 251 and 252 contemplates that the obligations imposed by section 251 and our regulations will establish the relevant provisions that will frame the negotiation process and will govern the resolution of disputes in the arbitration process. We recognize that the section 251 rules will tend to influence negotiations, pursuant to section 252(a)(1) and (2), between incumbent LECs and requesting carriers seeking interconnection, access to unbundled network elements, and resale of LEC services. As a practical matter, it seems reasonable to expect that requesting carriers will seek to negotiate terms and conditions that are, overall, at least as advantageous as those available pursuant to the Commission's rules. At least in some cases, the implementing Section 251 rules may serve as a *de facto* floor or set of minimum standards that guide the parties in the voluntary negotiation process.

21. Sections 271 and 273 create incentives for the BOCs to implement promptly the mandates of sections 251 and 252. Pursuant to section 271, a BOC may not offer interLATA services within its service area (''in region'') until it is approved to do so (on a state-by-state basis) by the Commission, and section 273 allows a BOC to enter manufacturing at the same time the BOC is approved to offer in-region interLATA services. Under the terms of the MFJ, the BOCs were barred from manufacturing telecommunications equipment. Section 273 of the 1996 Act repealed that judicial prohibition and allows BOCS to manufacture such equipment subject to certain conditions. One of the requirements for obtaining approval for in-region interLATA services under section 271 is that the BOC must produce either an interconnection agreement that, among other things, has been approved under section 252 or, under certain circumstances, a statement of generally available interconnection terms and conditions. Under section 252 interconnection agreements that are arbitrated have to comply with section 251's mandates, as do all statements of generally available terms. In addition, all agreements and statements must comply with a ''competitive checklist'' set out in section 271, several requirements of which expressly reference the mandates of section 251. In these respects, compliance with section 251 and our regulations thereunder is a prerequisite to BOC entry into in-region interLATA services. But compliance may also facilitate BOC entry under section 271 in less obvious ways. For example, in reviewing a BOC application, the Commission must also consult with the Department of Justice and the relevant state commission, and it must decide whether granting the application serves the public interest. Each of these consultations and determinations could, in theory, be affected by considerations of the extent to which the BOC is regarded as complying with section 251 and our rules. Thus, the Commission's section 251 rules will play a central role regarding BOC entry into in-region interLATA services under section 271.

22. Section 253 bars state and local regulations that prohibit or have the effect of prohibiting entities from offering telecommunications services. It also authorizes the Commission to preempt any law or regulation that is violative of this section. The section 251 rules should help to give content and meaning to what state or local requirements the Commission ''shall preempt'' as barriers to entry pursuant to section 253.

23. Moreover, the section 251 rules will assist the judiciary in reviewing actions of state commissions and the Commission in this area. Subsection 252(e)(6) provides that any party aggrieved by a state determination regarding a negotiated or arbitrated agreement or a statement of generally available terms, may bring an action in federal district court ''to determine whether the agreement or statement meets the requirements of section 251,'' presumably including our rules thereunder. The federal district court will thus have to refer to our implementing regulations in determining whether a state commission acted properly in approving or rejecting an arbitrated agreement. Similarly, Commission action in this area will be subject to review by federal circuit courts of appeal. This might include, for example, review of Commission decisions regarding BOC petitions to provide interLATA services pursuant to section 271 or review of Commission action preempting state or local regulations pursuant to section 253. In all of these cases, the court will look to the Commission's section 251 rules to guide its review of the Commission's action.

24. These statutory provisions and the Commission's rules implementing the requirements of section 251 are designed to end the era of monopoly regulation for American telecommunications markets. By dismantling entry barriers and reducing the inherent advantages of incumbent LECs, they establish a national process for enhancing competition, increasing consumer choice, lowering rates, and reducing regulation. The Commission's rules implementing section 251 will have a pervasive and substantial impact in a variety of contexts under the 1996 Act and will serve as the cornerstone of the pro-competitive provisions of the statute. These rules will assist incumbent LECs, telecommunications carriers, state commissions, the FCC, and the courts in defining rights and responsibilities regarding interconnection, unbundling, resale, and many other issues under the 1996 Act.

II. Provisions of Section 251

A. Scope of the Commission's Regulations

25. Section 251(d)(1) instructs the Commission, within six months after the enactment of the 1996 Act (that is, August 8, 1996), to ''establish regulations to implement the requirements of [section 251].'' The Commission's implementing rules should be designed ''to accelerate rapidly private sector deployment of advanced telecommunications and information technologies and services to all Americans by opening all telecommunications markets to competition.'' In addition to directing the Commission to establish rules to implement section 251, section 253 further requires the Commission to preempt the enforcement of any state or local statute, regulation or legal requirement that ''prohibit[s] or [has] the effect of prohibiting the ability of any entity to provide any interstate or intrastate telecommunications service.''

26. These specific statutory directives make clear that Congress intended the Commission to implement a pro-competitive, de-regulatory, national policy framework envisioned by the 1996 Act. Given the forward-looking focus of the 1996 Act, the nationwide character of development and

deployment of underlying telecommunications technology, and the nationwide nature of competitive markets and entry strategies in the dynamic telecommunications industry, we believe we should take a proactive role in implementing Congress's objectives. Thus, we intend in this proceeding to adopt national rules that are designed to secure the full benefits of competition for consumers, with due regard to work already done by the states that is compatible with the terms and the pro-competitive intent of the 1996 Act.

27. In accomplishing this objective, we need to determine the extent to which our rules should elaborate on the meaning of the statutory requirements set forth in sections 251 and 252. For example, we could adopt explicit rules to address those issues that are most critical to the successful development of competition, and with respect to which significant variations would undermine competition. This approach would further a uniform, pro-competitive national policy framework, as envisioned by the statute, and yet still preserve broad discretion for states to resolve, consistent with the 1996 Act, the panoply of other individual issues that may be raised in arbitration proceedings. This approach also would facilitate rapid private sector deployment of advanced telecommunications and information technologies and services by swiftly opening all telecommunications markets to competition. We seek comment on such an approach and whether it would accomplish Congress' goal of promoting efficient competition in local telecommunications markets throughout the country.

28. We see many benefits in adopting such rules to implement section 251. Such rules should minimize variations among states in implementing Congress' national telecommunications policy and guide states that have not yet adopted the competitive paradigm of the 1996 Act. Such rules also could expedite the transition to competition, particularly in those states that have not adopted rules allowing local competition, and thereby promote economic growth in state, regional, and national markets. More than 30 states do not have rules governing local competition in place today; most of those states have not commenced proceedings to adopt the necessary rules.

29. The adoption of explicit national rules to implement section 251 would not necessarily undermine the initiatives undertaken by various states prior to the enactment of the 1996 Act, and in fact, we anticipate that we will build upon actions some states have taken to address interconnection and other issues related to opening local markets to competition. Some states have been in the forefront of the pro-competitive effort to open local markets to competition, and these approaches may comport with the 1996 Act despite the fact that many of them pre-date it. Building on the progress made by these states, explicit national rules could be modelled on existing state statutes or regulations to the extent that they comply with the terms of the 1996 Act. For example, the Commission could conclude that a particular state's approach to unbundling of network elements is consistent with the 1996 Act and that it therefore may serve as a useful model for a national rule on unbundling. The Commission might also conclude that a range of different approaches used by several states to interconnection arrangements comply with the Act and therefore would be acceptable under a national rule. Throughout this item, we seek comment on the extent to which existing state initiatives are consistent with the new federal statute and, to the extent they are, the wisdom of using existing state approaches as guideposts or benchmarks for our national rules.

30. Explicit national rules implementing section 251 can be expected to reduce the capital costs of, and attract investment in, new entrants by enhancing the ability of the investment community to assess an entrant's business plan. Such rules would also permit firms to configure their networks in the same manner in every market they seek to enter. Uniform network configurations could achieve significant cost efficiencies for new entrants; if new competitors were required to modify their networks in different markets solely to be compatible with a patchwork of different regulations, they would likely incur additional expense, thereby increasing the cost of entry that is inconsistent with the pro-competitive goals of the statute. A uniform network design can be expected to reduce start-up costs, accelerate innovation, enhance interoperability of networks and equipment, and reduce the administrative burdens for both incumbent LECs and entrants.

31. Explicit national rules under section 251 also could expedite the implementation of other provisions of the 1996 Act that require incumbent LECs, new entrants, the states, federal courts, and the Commission to apply the requirements of section 251 in other contexts. Section 252 provides that incumbent LECs and entrants initially will seek to arrive at interconnection and unbundling arrangements through voluntary negotiations. By narrowing the range of permissible results, concrete national standards would limit the effect of the incumbent's bargaining position on the outcome of the negotiations. In addition, the application of explicit national rules under section 251 could provide important guidance to federal district courts that are charged with reviewing state determinations of whether particular arbitration agreements are consistent with section 251 (presumably including our rules thereunder). Moreover, the absence of such rules could lead to varying or inconsistent decisions by individual district and circuit courts concerning the core requirements of the 1996 Act. We believe that such a result would be inconsistent with the intent of Congress in passing comprehensive telecommunications legislation.

32. Further, rules that elaborate on the statutory requirements of section 251 would establish clear guidelines that we will need to carry out our responsibilities under the 1996 Act. We will need explicit rules to guide our arbitration of disputes between incumbent LECs and new entrants if we are required, under section 252(e), to assume those responsibilities. In addition, BOCs must satisfy the checklist set forth in section 271(c)(2)(B) before they may offer in-region, interLATA services. The checklist requires BOCs to comply with specific provisions of section 251. Thus, the Commission needs to articulate clear rules that clarify what constitutes compliance with section 251 for purposes of our review under section 271.

33. On the other hand, there may be countervailing concerns that could weigh against rules that significantly explicate in some detail the statutory requirements of sections 251 and 252. Adopting explicit national rules, in certain circumstances, might unduly constrain the ability of states to address unique policy concerns that might exist within their jurisdictions. The case for permitting material variability among the states could be strengthened if there are substantial state-specific variations in technological, geographic, or demographic conditions in particular local markets that call for fundamentally different regulatory approaches. We seek comment on the nature of such variations, and on whether there are such variations that require fundamentally different regulatory approaches. States may also seek, to the extent permitted by sections 251, 252,

253, and 254, to ensure the uninterrupted delivery of certain services by the incumbent where competition might arguably threaten those services. It might also be argued that there is value to permitting states to experiment with different pro-competitive regimes to the extent that there is not a sufficient body of evidence upon which to choose the optimal pro-competitive policy. If we were to decline to adopt explicit rules at all, in effect we would be permitting states to set different priorities and timetables for requiring incumbent LECs to offer interconnection and unbundled network elements. Such an approach means that we would balance the need to swiftly introduce telecommunications competition against other policy priorities. We seek comment on these issues.

34. We also note that, under section 252, states must implement any rules we establish under section 251. Section 252 assigns to the states the responsibility for arbitrating disputes between the parties, including resolving factual disputes. We seek comment on how our national rules can best be crafted to assist the states in carrying out this responsibility.

35. In the succeeding sections of this NPRM, we invite parties to comment, with respect to each of the obligations imposed by section 251, on the extent to which adoption of explicit national rules would be the most constructive approach to furthering Congress' pro-competitive, deregulatory goals of making local telecommunications markets effectively competitive. We seek comment on the relative costs and benefits of constraining or encouraging variations among the states in carrying out their responsibilities under section 252. We also invite parties to comment on whether our rules implementing section 251 can be crafted to allow states to implement policies reflecting unique concerns present in the respective states, without vitiating the intended effects of a scheme of overarching national rules. We further ask parties to comment on the consequences of fostering or constraining variability among the states.

36. As a separate matter, we note that section 251 and our implementing regulations govern the states' review of BOC statements of generally available terms and conditions, as well as arrangements arrived at through compulsory arbitration pursuant to section 252(b). We tentatively conclude that we should adopt a single set of standards with which both arbitrated agreements and BOC statements of generally available terms must comply. We believe that this is consistent with both the language and the purpose of the 1996 Act. We seek comment on this tentative conclusion.

37. On a separate jurisdictional issue, we tentatively conclude that Congress intended sections 251 and 252 to apply to both interstate and intrastate aspects of interconnection, service, and network elements, and thus that our regulations implementing these provisions apply to both aspects as well. It would make little sense, in terms of economics, technology, or jurisdiction, to distinguish between interstate and intrastate components for purposes of sections 251 and 252. Indeed, if the requirements of sections 251 and 252 regarding interconnection, and our regulations thereunder, applied only to interstate interconnection, as might be argued in light of the lack of a specific reference to intrastate service in those sections, states would be free, for example, to establish disparate guidelines for intrastate interconnection with no guidance from the 1996 Act. We believe that such a result would be inconsistent with Congress' desire to establish a national policy framework for interconnection and other issues critical to achieving local competition. As Senator Lott observed, ''In addressing *local* and long distance issues, creating an open access and sound interconnection policy was the key objective * * *.'' Representative Markey noted that, ''[W]e take down the barriers of *local* and long distance and cable company, satellite, computer, software entry into any business they want to get in.''

38. We also tentatively conclude that it would be inconsistent with the 1996 Act to read into sections 251 and 252 an unexpressed distinction by assuming that the FCC's role is to establish rules for interstate aspects of interconnection and the states' role is to arbitrate and approve intrastate aspects of interconnection agreements. Because the statute explicitly contemplates that the states are to follow the Commission's rules, and because the Commission is required to assume the state commission's responsibilities if the state commission fails to act to carry out its section 252 responsibilities, we believe that the jurisdictional role of each must be parallel. We seek comment on our tentative conclusion. The argument has also been raised that sections 251 and 252 apply *only* with respect to intrastate aspects of interconnection, service, and network elements. We seek comment on this argument as well.

39. Section 2(b) of the 1934 Act does not require a contrary tentative conclusion. Section 2(b) provides that, except as provided in certain enumerated sections not including sections 251 and 252, ''nothing in [the 1934] Act shall be construed to apply or to give to the Commission jurisdiction with respect to * * * charges, classifications, practices, services, facilities, or regulations for or in connection with intrastate communication service by wire or radio of any carrier * * *.'' As stated above, however, we tentatively conclude that section 251 applies to certain ''charges, classifications, practices, services, facilities, or regulations for or in connection with intrastate communication service.'' In enacting section 251 after section 2(b) and squarely addressing therein the issues before us, we believe Congress intended for section 251 to take precedence over any contrary implications based on section 2(b). We seek comment on this tentative conclusion.

40. We note that sections 251 and 252 do not alter the jurisdictional division of authority with respect to matters falling outside the scope of these provisions. For example, rates charged to end users for local exchange service, which have traditionally been subject to state authority, continue to be subject to state authority. Indeed, that section 251 does not disturb state authority over local end user rates may explain why Congress saw no need to amend section 2(b) expressly, whereas it did see such a need in its 1993 legislation establishing commercial mobile radio service (CMRS). In the 1993 legislation, Congress eliminated the authority of states to regulate the rates charged for CMRS and so may have felt that an express amendment to section 2(b) would be especially helpful. We seek comment on these issues as well.

41. We also seek comment on the relationship between sections 251 and 252 and the Commission's existing enforcement authority under section 208. Section 208 of the Act gives the Commission general authority over complaints regarding acts by ''any common carrier subject to this Act, in contravention of the provisions thereof.'' Does this mean that the Commission has authority over complaints alleging violations of requirements set forth in sections 251 or 252? If not, in what forum would such complaints be reviewed? In state commissions? In courts? Is there a relevant distinction here between complaints concerning the formation of interconnection agreements and complaints regarding implementation of

such agreements? We also seek comment on the relationship between sections 251 and 252 and any other source of Commission enforcement authority that may be applicable. We further seek comment on how we might increase the effectiveness of the enforcement mechanisms available under the 1934 Act, as amended. We seek comment on how private rights of action might be used under sections 206–208 of the 1934 Act, as amended, and the different roles the Commission might play, for example, as an expert agency, to speed resolution of disputes in other forms used by private parties.

B. Obligations Imposed by Section 251(c) on ''Incumbent LECs''

42. We now turn to the particular provisions of section 251 that the Commission is obligated to implement under section 251(d)(1). We begin with section 251(c) because we believe that provision is the cornerstone of Congress's plan for opening local telecommunication markets to competitive entry.

43. Section 251(c) establishes obligations for ''incumbent local exchange carriers.'' An ''incumbent local exchange carrier'' for a particular area is defined in section 251(h)(1) as a LEC that: (1) as of the enactment date of the 1996 Act, both ''provided telephone exchange service in such area'' and ''was deemed to be a member of the exchange carrier association pursuant to Section 69.601 of the Commission's regulations'', or (2) ''is a person or entity'' that, on or after the enactment date of the 1996 Act, ''became a successor or assign of such member'' of the exchange carrier association.

44. In addition, under Section 251(h)(2), the Commission may, by rule, treat another LEC or class of LECs as an incumbent LEC if (1) ''such carrier occupies a position in the market for telephone exchange service within an area that is comparable'' to that of an incumbent LEC, (2) ''such carrier has substantially replaced'' an incumbent LEC, and (3) ''such treatment is consistent with the public interest, convenience, and necessity and the purposes'' of Section 251. We seek comment on whether we should establish at this time standards and procedures by which carriers or other interested parties could seek to demonstrate that a particular LEC should be treated as an incumbent LEC pursuant to Section 251(h)(2).

45. We further seek comment on whether state commissions are permitted to impose on carriers that have not been designated as incumbent LECs any of the obligations the statute imposes on incumbent LECs. We understand that some states have found that the negotiation process between incumbent LECs and their potential competitors may move more smoothly if the arrangements offered by an incumbent LEC are made reciprocal. Under this approach, for example, a potential competitor would be required to make available to an incumbent LEC directory assistance information on the same basis that the LEC agreed to furnish the information. Some parties have alleged, however, that imposing on new entrants the obligations imposed on incumbent LECs would undermine the competitive goals of the 1996 Act. We seek comment on whether imposing on new entrants requirements the 1996 Act imposes on incumbent LECs would be consistent with the Act's distinction between the obligations of all telecommunications carriers, all LECs and the additional obligations of all incumbent LECs.

1. Duty To Negotiate in Good Faith

46. As noted in section I.B., above, if the parties fail to negotiate an agreement voluntarily, they must submit to arbitration. Section 251(c)(1) states that ''each incumbent local exchange carrier has the * * * duty to negotiate in good faith in accordance with section 252 the particular terms and conditions of agreements to fulfill the duties'' described in section 251(b) for LECs and section 251(c) for incumbent LECs. In addition, section 252(b)(5) provides that, pursuant to the arbitration process, the refusal of a party to ''participate further in the negotiations, to cooperate with the State commission in carrying out its function as an arbitrator, or to continue to negotiate in good faith in the presence of, or with the assistance of, the State commission shall be considered a failure to negotiate in good faith.'' The state commission is required to resolve, within 9 months after the incumbent LEC receives a request under section 252, any issues that were submitted for arbitration.

47. We seek comment on the extent to which the Commission should establish national guidelines regarding good faith negotiation under section 251(c)(1), and on what the content of those rules should be. We note that carriers have submitted some information alleging that LECs already have employed certain tactics that the Commission should determine violate the duty to negotiate in good faith. For example, carriers have alleged that incumbent LECs have refused to begin to negotiate until the requesting telecommunications carrier satisfies certain conditions, such as signing a nondisclosure agreement, or agreeing to limit its legal remedies in the event that negotiations fail. We believe that such tactics might impede the development of local competition, and may be inconsistent with provisions of the 1996 Act. We seek comment on the extent to which these or other practices should be deemed to violate the duty to negotiate in good faith. We note that courts and the Commission previously have addressed issues regarding good faith negotiation. We seek comment on specific legal precedent regarding the duty to negotiate in good faith that we should rely on in establishing national guidelines regarding section 251(c)(1).

48. A related issue is what effect section 252 has on agreements regarding service, interconnection, or unbundled network elements that predate the 1996 Act. Section 252(e)(1) states: ''Any interconnection agreement adopted by negotiation or arbitration shall be submitted for approval to the State commission.'' Section 252(a)(1) states that an agreement for interconnection, service, or network element, ''including any interconnection agreement negotiated before the date of the enactment of the Telecommunications Act of 1996, shall be submitted to the State commission under subsection (e) of this section.'' We seek comment on whether these provisions require parties that have existing agreements to submit those agreements to state commissions for approval. We also seek comment on whether one party to an existing agreement may compel renegotiation (and arbitration) in accordance with the procedures set forth in section 252.

2. Interconnection, Collocation, and Unbundled Elements

a. Interconnection. 49. Section 251(c)(2) imposes upon incumbent LECs ''the duty to provide, for the facilities and equipment of any requesting telecommunications carrier, interconnection with the local exchange carrier's network * * * for the transmission and routing of telephone exchange service and exchange access.'' Such interconnection must be: (1) provided by the incumbent LEC at ''any technically feasible point within [its] network;'' (2) ''at least equal in quality to that provided by the local exchange carrier to itself or * * * [to] any other party to which the carrier provides interconnection;'' and (3) provided on rates, terms, and conditions that are ''just, reasonable, and nondiscriminatory, in accordance with the terms and conditions of the agreement and the requirements of this section and section 252.'' The interconnection obligation plays a vital

role in promoting competition by ensuring that a requesting carrier can on reasonable rates, terms and conditions transmit telecommunications traffic between its network and the incumbent's network in a reliable and efficient manner.

50. We believe that uniform national rules for evaluating interconnection arrangements would likely offer several advantages in advancing Congress' desire to create a pro-competitive national policy framework regarding local telephone service. For example, national standards would likely speed the negotiation process by eliminating potential areas of dispute. We note that, in the past, disputes before the FCC between LECs and interconnectors have arisen most often where our rules lacked specificity, or where no standards had been adopted. Lingering disputes over the terms and conditions of interconnection due to confusion or ambiguity create the potential for incumbent LECs to delay entry. For these reasons we tentatively conclude that uniform interconnection rules would facilitate entry by competitors in multiple states by removing the need to comply with a multiplicity of state variations in technical and procedural requirements.

51. We also, however, seek comment on the consequences of not establishing such specific rules for interconnection. We seek comment on whether there are instances wherein the aims of the 1996 Act would be better achieved by permitting states to experiment with different approaches. Would permitting substantial variation make it easier for states to respond more appropriately to technical, demographic, or geographic issues specific to that state or region without detracting from the overall purposes of the 1996 Act? For example, might technical differences, such as a lack of digital switching capability in a particular network, affect the technically feasible interconnection points on the network? Would variations in technical requirements among states affect the ability of new entrants to plan and configure regional or national networks? For example, how would variations in the definition of ''technical feasibility,'' the number of required points of interconnection, and methods of interconnection, affect the ability of new entrants to plan and configure regional or national networks? How would such variations affect the entrant's ability to deploy alternative network architectures, such as synchronous optical network (SONET) rings, which may deliver telephone service more efficiently? Would a lack of explicit national standards reduce predictability and certainty, and thereby slow down the development of competition? Would a lack of explicit guidelines impair the state's ability to complete arbitration within 9 months of the date that the interconnection request was made, or our ability to evaluate BOC compliance under section 271 within 90 days? Would a lack of clear national standards impair our ability under section 252(e) to assume a state commission's responsibilities if the state commission fails to act to carry out its responsibilities under section 252?

52. We also encourage parties to submit information regarding the approaches taken by those states that have allowed interconnection. A number of states already have adopted a variety of approaches to interconnection. For example, New York sets basic ''expectations'' that constitute default provisions if the parties fail to agree. These provisions include the availability of two-way trunking facilities and combined trunking arrangements. California has adopted what it calls a ''preferred outcomes'' approach. Under this approach, parties are encouraged to use 13 broad criteria regarding interconnection arrangements (the ''preferred outcomes'') that were established by the State commission to guide the negotiation and arbitration process. Although parties may develop different outcomes, preferred outcomes receive expedited review and approval. Arbitration judges may also use the preferred outcomes as guidelines in cases where the negotiations fail, and they have the discretion to mandate interconnection provisions that go beyond the preferred outcomes. With respect to each of the issues discussed below, we invite commenters to analyze the advantages and the disadvantages of the approaches states have adopted with respect to interconnection arrangements. We also seek comment on whether any elements of these state approaches would be suitable for incorporation into national standards implementing the 1996 Act. Finally, we ask commenting parties to identify state approaches to interconnection that they believe are inconsistent with or preempted by the 1996 Act, or that are inadvisable from a policy perspective.

53. We further seek comment on the relationship between the obligation of incumbent LECs to provide ''interconnection'' under 251(c)(2) and the obligation of the incumbent LEC, and all LECs, to establish reciprocal compensation arrangements for the ''transport and termination'' of telecommunications pursuant to 251(b)(5). The issue is significant mainly because, in section 252(d)(2), there is one pricing standard for ''interconnection'' under section 251(c)(2) and a separate one for ''transport and termination'' under 251(b)(5).

54. On the one hand, the term ''interconnection,'' as used in section 251(c)(2), might refer only to the facilities and equipment physically linking two networks and not to transport and termination services provided by such linking—in which case there is no overlap in the coverage of the two sections. On the other hand, the term ''interconnection'' as used in section 251(c)(2) might refer to both the physical linking of the two networks *and* to transport and termination services—in which case there is considerable overlap. We seek comment on how to ''interpret'' the term ''interconnection'' in section 251(c)(2). Parties that advocate the broader meaning should also comment on the overlap in the coverage of the sections and how the overlap affects which section 252(d) pricing standards apply.

55. In the following paragraphs, we discuss the requirements of the 1996 Act concerning interconnection in more detail. More specifically, we address issues of technically feasible points of interconnection, just, reasonable, and nondiscriminatory terms and conditions, and quality and methods of interconnection.

(1) Technically Feasible Points of Interconnection. 56. Subsection (c)(2)(B) requires that incumbent LECs provide interconnection ''at any technically feasible point within the [incumbent LEC's] network.'' We seek comment on what constitutes a ''technically feasible point'' within the incumbent LEC's network for purposes of this section. In this regard, we note that network technology continues to advance and emphasize that we seek to avoid a static definition that may artificially limit future interconnection. Is there a definition of ''technically feasible'' that will provide the necessary flexibility in determining interconnection points as network technology evolves? Further, to what extent, if any, should a risk to network reliability or other potential harm to the network be considered in determining whether interconnection at a particular point is technically feasible? We tentatively conclude that, if risks to network reliability are considered in determining whether interconnection at a certain point is technically feasible, the party alleging harm to the network will be required to present detailed information to support such a claim. We seek comment on these issues and our

tentative conclusion concerning claims of network harm.

57. We also tentatively conclude that the minimum federal standard should provide that interconnection at a particular point will be considered technically feasible within the meaning of section 251(c)(2) if an incumbent LEC currently provides, or has provided in the past, interconnection to any other carrier at that point, and that all incumbent LECs that employ similar network technology should be required to make interconnection at such points available to requesting carriers. For example, many LECs already provide interconnection at the trunk- and loop-side of the local switch, transport facilities, tandem facilities, and signal transfer points. We thus tentatively conclude that interconnection at those points should be technically feasible for all incumbent LECs that use technology similar to that used by LECs currently offering interconnection at those points. We believe that as technology advances, the number of points at which interconnection is feasible may change and acknowledge that the federal standard for minimum interconnection points should change accordingly.

58. Alternatively, we could allow states to determine whether interconnection at a greater number of points would also be technically feasible. We seek comment on whether allowing states to designate additional technically feasible interconnection points would make it more difficult for a carrier to develop a regional or national network. In this regard, commenters should address additional points at which LECs currently provide interconnection and on other possible points of interconnection that may be technically feasible. Because the statute imposes an affirmative obligation on incumbent LECs to provide interconnection at any technically feasible points in their networks, we further tentatively conclude that, where a dispute arises, the incumbent LEC has the burden of demonstrating that interconnection at a particular point is technically infeasible. We seek comment on this tentative conclusion.

59. We also invite parties to submit information concerning interconnection obligations and policies that state commissions have adopted for incumbent LECs to help us determine what points of interconnection states have found to be technically feasible. We note, for example, that the New York Public Service Commission (NYPSC) has established options for interconnection points that range from the incumbent LEC's premises to the requesting carrier's premises, and include any point in between. These options are deemed reasonable by the NYPSC, although they are not requirements (in contrast to other interconnection requirements, which New York sets up as default provisions). The parties are to negotiate the actual interconnection points, however. We also seek comment on approaches that other states have adopted for determining the technical feasibility of interconnection at particular points. We also seek comment on which state policies are either inconsistent with the language of the 1996 Act or unwarranted from a policy perspective.

(2) Just, Reasonable, and Nondiscriminatory Interconnection. 60. Section 251(c)(2)(D) requires that the interconnection provided by the incumbent LEC be ''on rates, terms, and conditions that are just, reasonable, and nondiscriminatory.'' We address the pricing of interconnection, collocation, and unbundled elements in section II.B.2.d below.

61. We seek comment on how to determine whether the terms and conditions for interconnection arrangements are just, reasonable, and nondiscriminatory. For example, should we adopt explicit national standards for the terms and conditions for interconnection? In particular, we seek comment on whether we should adopt uniform national guidelines governing installation, maintenance and repair of the incumbent LEC's portion of interconnection facilities. We also seek comment on whether we should adopt standards for the terms and conditions concerning the payment of the non-recurring costs associated with installation. We seek comment on whether the Commission should establish incentives to encourage incumbent LECs to provide just, reasonable, and nondiscriminatory interconnection and, if so, what those incentives should be. For example, should LECs be required to meet agreed upon performance standards for installing or repairing interconnection facilities and pay liquidated damages for any failure to satisfy the agreement? Are there means of accomplishing this result that do not require the propagation of rules detailing specific performance standards?

62. If we were to establish national guidelines on this issue, we seek comment on state policies regarding the terms and conditions for interconnection that might serve as models. For example, with respect to meet point interconnection arrangements, the state of Washington requires that each company pay for and be responsible for building and maintaining its own facilities up to the meet point, as is typical in this type of interconnection arrangement. We note that New York permits earnest fees on interconnection arrangements to ensure the good faith nature of interconnection requests before the incumbent LEC begins construction or other necessary arrangements for interconnection. That fee is then applied to the requesting party's costs for interconnection. We recognize, however, that LECs potentially could use such fees and other terms and conditions to delay and deter entry. We invite parties to comment on this approach as well as on other states' policies. We specifically seek comment on whether such policies are consistent with the pro-competitive and deregulatory tenor of the Act. We seek comment on whether any state substantive rules regarding the terms and conditions for interconnection might be adopted as a national standard, as well as comment on which state rules might be inconsistent with the 1996 Act.

(3) Interconnection that is Equal in Quality. 63. Section 251(c)(2)(C) requires that the interconnection provided by the incumbent LEC be ''at least equal in quality to that provided by the [incumbent LEC] to itself or to any subsidiary, affiliate, or any other party to which the carrier provides interconnection.'' We seek comment on what criteria may be appropriate in determining whether interconnection is ''equal in quality.'' We seek comment on whether these criteria should be adopted as a national standard, or whether competitive objectives would be achievable by allowing variations and experimentation among states. We also seek comment on relevant state requirements, such as those in Iowa, which prohibit a rate-regulated incumbent from providing inferior interconnection to another provider. We invite parties to comment on this and other provisions that might guide our efforts in implementing the ''equal in quality'' requirement of the 1996 Act.

(4) Relationship Between Interconnection and Other Obligations Under the 1996 Act. 64. Section 251(c)(2) further requires incumbent LECs to provide interconnection with the LEC's network ''for the facilities and equipment of any requesting telecommunications carrier.'' In comparison, section 251(c)(6) imposes upon incumbent LECs ''the duty to provide * * * for physical collocation of equipment necessary for interconnection.'' We note that section 251(c)(6) regarding physical collocation does not expressly limit the Commission's authority under section 251(c)(2) to establish rules requiring

incumbent LECs to make available a variety of technically feasible methods for interconnection. These methods may, for example, include meet point arrangement as well as physical and virtual collocation. We tentatively conclude that the Commission has the authority to require, in addition to physical collocation, virtual collocation and meet point interconnection arrangements, as well as any other reasonable method of interconnection. We seek comment on this tentative conclusion.

65. We seek comment on the various state requirements concerning methods for interconnection. For example, in the state of Washington, the commission has ordered that companies establish mutually agreed upon meet points for purposes of exchanging local traffic. Incumbent LECs may establish, through negotiations, separate meet points for each company, or a common hub by which multiple companies can come together efficiently. Oregon requires that requesting carriers be permitted to interconnect with incumbent LECs by negotiating mutually acceptable arrangements, including meet points. Maryland allows the incumbent LEC the option of using virtual or physical collocation, subject to commission review. We seek information on these and other similar state requirements. We seek comment on whether any state requirements concerning methods for interconnection might be appropriately adopted as a national standard. We also seek comment concerning those state requirements that may be inconsistent with the 1996 Act or inappropriate from a policy standpoint.

b. Collocation. 66. Section 251(c)(6) of the Act requires incumbent LECs to provide ''for the physical collocation of equipment necessary for interconnection or access to unbundled network elements at the premises of the local exchange carrier, except that the carrier may provide for virtual collocation if the local exchange carrier demonstrates to the State commission that physical collocation is not practical for technical reasons or because of space limitations.'' Section 251(c)(6) fosters competition by ensuring that a competitor may install equipment necessary for interconnection or access to unbundled network elements on LEC premises and gives competitors access to the LEC central office to install, maintain, and repair this equipment.

67. The establishment of national rules with respect to at least some issues regarding collocation would appear to offer several important benefits. For example, we believe that national standards would speed the negotiation process by eliminating potential areas of dispute. Lingering disputes or ambiguity regarding the parties' obligations may delay competitive entry. In addition, uniform standards would probably facilitate entry by competitors in multiple states by removing the need to comply with a patchwork of state variations in technical and procedural requirements. Finally, clear uniform rules could add speed, fairness, and simplicity to the arbitration process, and reduce uncertainty. We also note that beginning in 1992, the Commission adopted both physical and virtual collocation rules and that these rules were then used by several states to develop their own approaches to collocation. We therefore tentatively conclude that we should adopt national standards where appropriate to implement the collocation requirements of the 1996 Act.

68. We also seek comment on the extent to which we should establish national rules for collocation that allow for some variation among states, and on the advantages and disadvantages of permitting such variation. Would permitting material variation foster competition and make it easier for states to respond more appropriately to issues specific to that state or region? Would variations in technical requirements among states affect the ability of new entrants to plan and configure regional or national networks? Would a lack of specific national standards reduce predictability and certainty, and thereby slow down the development of competition? Would a lack of explicit guidelines impair the state's ability to complete arbitration within 9 months of the date that the interconnection request was made, or our ability to evaluate BOC compliance under section 271 within the statutory time-frame? Would a lack of specific national standards impair our ability under section 252(e) to assume a state commission's responsibilities if the state commission fails to act to carry out its responsibilities under section 252?

69. We also encourage parties to submit information concerning specific state approaches regarding collocation that might provide useful models for national guidelines. In several states, including California and New York, incumbent LECs currently provide physical collocation. Under California's ''preferred outcomes'' approach, the ''preferred outcome'' concerning physical collocation is similar to rules the FCC previously established for physical collocation. California presently allows LECs to offer virtual or physical collocation. New York applies a comparably efficient interconnection (CEI) standard to both new entrants and incumbent LECs, that requires that interconnection be technically and economically comparable to actual physical collocation. New York does not have detailed physical collocation requirements under the CEI standard, but rather leaves such matters to negotiation between the parties. Currently in New York, Rochester Telephone and NYNEX both offer physical collocation to satisfy the CEI standard. In other states, incumbent LECs currently provide only virtual collocation. Illinois, which had originally mandated physical collocation, recently adopted rules regarding virtual collocation. The state of Washington also permits virtual collocation and has stated that such charges for virtual collocation should be no higher than charges for physical collocation. The Washington Commission also concluded that, if meet point interconnection arrangements are established by mutual agreement, decisions about where equipment is placed will be resolved as part of that negotiation, and therefore a virtual collocation tariff probably would not be necessary. Finally, Florida permits LECs to offer both virtual and physical collocation, but has left the details of such arrangements to negotiation between the parties.

70. We seek comment on whether one or more of these state collocation policies would be suitable for use as a national standard. We also seek comment on state policies that commenters believe are inconsistent with the goals of the 1996 Act, or that are inadvisable from a policy perspective. In this regard, parties are specifically asked to comment on the possible consequences of requiring new entrants with regional or national business plans to comply with divergent state requirements.

71. In light of our tentative conclusion that we should adopt national guidelines concerning physical and virtual collocation, we seek comment on what specific regulations would foster opportunities for local competition. For example, section 251(c)(6) mandates physical collocation at the ''premises'' of an incumbent LEC. Consistent with the ordinary meaning of the term ''premises,'' we tentatively conclude that ''premises'' includes, in addition to incumbent LEC central offices or tandem offices, all buildings or similar structures owned or leased by the incumbent LEC that house LEC network facilities. We seek comment on this tentative conclusion. We also seek comment on whether structures housing LEC network facilities on public rights

of way, such as vaults containing loop concentrators, or similar structures should be deemed to be LEC premises. We note that collocation of facilities inside such structures would still be subject to the technical feasibility and space availability limitations of section 251(c)(6).

72. Section 251(c)(6) requires the incumbent LEC to provide for the physical collocation of equipment necessary for interconnection or access to unbundled network elements. We seek comment on what types of equipment competitors should be permitted to collocate on LEC premises. Section 251(c)(6) also allows the incumbent LEC to provide virtual collocation instead of physical collocation in specific locations if ''the local exchange carrier demonstrates to the state commission that physical collocation is not practical for technical reasons or because of space limitations.'' We seek comment on whether we should establish guidelines for states to apply when determining whether physical collocation is not practical for ''technical reasons or because of space limitations,'' and, if so, what those guidelines might be. For example, to what extent, if any, should the risk of reduced reliability or other harm to the network be considered as a technical reason justifying a refusal to offer physical collocation, and what type of evidence must the LEC offer to prove its claim? We also seek comment on whether national guidelines may be necessary to prevent anticompetitive behavior by the manipulation or unreasonable allocation of space by either the incumbent LEC or new entrants.

73. Finally, we seek comment on whether we should adopt comprehensive national standards for collocation by readopting our prior standards governing physical and virtual collocation that we established in the *Expanded Interconnection* proceeding. *Special Access Expanded Interconnection Order,* 57 FR 54323 (11/18/92); *Virtual Collocation Expanded Interconnection Order,* 59 FR 38922 (8/1/94). In that proceeding, we addressed standards governing, among other things, the following: space exhaustion and allocation; types of equipment that could be placed, or designated for placement, in incumbent LEC offices; points of entry; insurance; and exemptions from physical collocation requirements based on space limitations. We also seek comment regarding whether we should modify those standards, in light of: (1) the new statutory requirements; (2) disputes that have arisen in the subsequent investigations regarding the LECs' physical and virtual collocation tariffs; (Tariffs for both virtual and physical collocation offerings, filed by the LECs pursuant to the Virtual Collocation *Expanded Interconnection Order,* 59 FR 38922 (8/1/94), are currently under investigation. In these designation orders, we addressed disputes that arose over various standards issues, for example: space size, space warehousing, termination notice and reasons, cage inspections, and insurance.) or (3) additional policy considerations. We also tentatively conclude, in light of the court decision in *Pacific Bell* v. *FCC,* (Pacific Bell v. FCC, No. 94–1547 (D.C. Cir. Mar. 22, 1996). The court remanded for reconsideration the Commission's virtual collocation order, 59 FR 38922 (8/1/94), concluding that the Commission's regulations implementing the 1996 Act would render moot the questions about the future effect of the order. The petitioners had argued that the Commission lacked statutory authority to order incumbent LECs to provide virtual collocation.) that our existing policies on expanded interconnection for interstate special access and switched transport services should continue to apply pursuant to our authority under sections 201 and 251(g). We seek comment on this tentative conclusion.

c. Unbundled Network Elements. 74. Section 251(c)(3) imposes a duty upon incumbent LECs ''to provide, to any requesting telecommunications carrier for the provision of a telecommunications service, nondiscriminatory access to network elements on an unbundled basis at any technically feasible point on rates, terms, and conditions that are just, reasonable, and nondiscriminatory in accordance with the terms and conditions of the agreement and the requirements of this section and section 252.'' Incumbent LECs are required to provide these network elements ''in a manner that allows requesting carriers to combine such elements in order to provide such telecommunications service.'' In addition, section 251(d)(2) provides that the Commission, in determining which network elements incumbent LECs should unbundle, ''shall consider, at a minimum, whether (A) access to such network elements as are proprietary in nature is necessary; and (B) the failure to provide access to such network elements would impair the ability of the telecommunications carrier seeking access to provide the services that it seeks to offer.''

75. Together, sections 251(c)(3) and 251(d)(2) foster competition by ensuring that new entrants wishing to compete with incumbent LECs can purchase access to those network elements that they do not possess, without paying for elements that they do not require. The ability to purchase, at reasonable, cost-based prices, access only to those network elements a carrier needs allows new entrants to enter the LEC's market gradually, building their own networks over time, and purchasing fewer unbundled elements as their own networks develop. Further, new entrants can purchase access to those elements incumbent LECs can provide most efficiently, and at the same time build their own facilities only where it would be efficient.

76. In addition, the requirement that rates, terms, and conditions be just, reasonable, and nondiscriminatory: (1) prevents the incumbent LEC from offering unbundled elements on rates, terms, and conditions so overpriced or burdensome as to discourage competition; (2) enables new entrants to discipline the incumbent's pricing; and (3) allows entrants to take market share from the incumbent if the new entrant is more efficient or if the incumbent attempts to charge prices above competitive levels.

77. Section 251(d)(2) provides that the Commission will ''determin[e] what network elements should be made available for purposes of subsection (c)(3).'' As a result of this provision, and the obligation created by section 251(d)(1), we tentatively conclude that section 251 obligates the Commission to identify network elements that incumbent LECs should unbundle and make available to requesting carriers under subsection (c)(3). Rather than itemize an exhaustive list of network elements, however, some of which competing carriers may not desire, we further tentatively conclude that the Commission should identify a minimum set of network elements that incumbent LECs must unbundle for any requesting telecommunications carrier, and, to the extent necessary, establish additional or different unbundling requirements in the future as services, technology, and the needs of competing carriers evolve. We seek comment on these tentative conclusions.

78. Carriers may, of course, voluntarily negotiate agreements for unbundling elements that differ from those addressed by the Commission under section 251(c)(3). In addition, section 252(e)(3) preserves a state's authority to impose other requirements of state law in its review of arbitrated agreements. 1996 Act, sec. 101, § 252(e)(3). Such requirements could include intrastate telecommunications service quality standards. Section

251(d)(3) also preserves the right of states to enforce consistent access and interconnection regulations. 1996 Act, sec. 101, § 251(d)(3). Thus, to the extent such requirements are consistent with the provisions of section 251(c)(3) and our rules, we tentatively conclude that states may require additional unbundling of LEC networks.

79. In light of our obligations under sections 251(d)(1) and 251(d)(2), we also seek comment on whether and to what extent, beyond merely identifying network elements that incumbent LECs must provide on an unbundled basis pursuant to subsection (c)(3), the Commission should establish minimum requirements governing such unbundling. These requirements could include, for example, provisioning and service intervals, nondiscrimination safeguards, and technical standards. We believe that minimum national requirements governing the unbundling of network elements would likely offer several advantages. Such requirements would provide uniform technical requirements, and would enhance the ability of new entrants to take advantage of economies of scale and to plan and deploy networks stretching across state and LEC boundaries. We note that telecommunications equipment has heretofore been provided by national manufacturers selling to a nation-wide market, without substantial regional or state-to-state variation in equipment design. Minimum national requirements also may ensure some level of network and equipment interoperability between both competing and noncompeting carriers. Further, Commission minimums would reduce or eliminate the need for certain duplicative decision-making by the states, provide a ready framework for the many states that have not acted to unbundle LEC networks, and speed the negotiation and arbitration processes by reducing any ambiguity in the parties' obligations. Thus, states could rely on a set of generally applicable minimum requirements, while prescribing additional rules of unbundling tailored to their particular circumstance.

80. We also seek comment on whether and to what extent we should establish national rules for unbundled network elements that allow for some variation among states. For example, we seek comment on the extent to which such rules should permit states to impose different obligations to address state-specific concerns and to experiment with alternative approaches, and whether permitting such variation would better achieve the goals of the 1996 Act. Would variations in technical requirements among states affect the ability of new entrants to plan and configure regional or national networks? Would a lack of explicit requirements impair a state's ability to complete arbitrations within the prescribed time-frame, or our ability to evaluate BOC compliance under section 271 within 90 days? Would a lack of clear national rules impair our ability under section 252(e) to assume a state commission's responsibilities if the state commission fails to act to carry out its responsibilities under section 252?

81. We also encourage parties to provide us with information regarding the policies that states have adopted to address network unbundling. While many states have not acted at all to unbundle LEC networks, several states have ordered some amount of LEC network unbundling. States such as Illinois, New York, California, and Maryland require, or plan to require, LECs to unbundle at least local loops. New York, for example, has implemented a request-based approach that requires unbundling only for requested elements (to date local loops and ports), and then only if essential facilities are involved. Other states, such as Maryland and Florida, require LECs to unbundle all network elements to the extent technically feasible and ''reasonable'' or ''economically feasible,'' and address unbundling requirements for a specific element when that element is requested. In contrast to these request-based approaches, some states, such as Colorado, Hawaii, and California, determine an essential or ''key'' set of LEC network elements that LECs must unbundle. We seek comment on the policies that other states have adopted.

82. Finally, with respect to each of the issues discussed below, we request comment on whether any existing state approaches, alone or in combination, would be suitable for incorporation into national rules implementing section 251(c)(3). We also ask commenting parties to identify state approaches that they believe are either inconsistent with the 1996 Act or that are inadvisable from a policy perspective.

(1) Network Elements. 83. Section 3(29) defines a ''network element'' as both ''a facility or equipment used in the provision of a telecommunications service'' as well as ''features, functions, and capabilities that are provided by means of such facility or equipment.'' According to the Joint Explanatory Statement, ''[t]he term 'network element' was included to describe the facilities, such as local loops, equipment, such as switching, and the features, functions, and capabilities that a [LEC] must provide for certain purposes under other sections of the conference agreement.'' We believe that under this broad definition, an entire local loop, for example, could constitute a single network element, or comprise several network elements. An alternative interpretation, albeit one that would provide competitors less flexibility, is that a network element, once defined, cannot be subdivided. We seek comment on our more flexible interpretation of ''network element,'' and how to apply the definition in accordance with the unbundling proposals discussed below.

84. We also seek comment on the apparent distinction, drawn in the definition of ''network element'' in the 1996 Act, between the ''facility or equipment used in the provision of a telecommunications service,'' and the service itself. We request comment on the meaning and significance of such a distinction in general and with respect to particular elements. For example, because the nature of a network element, under the definition in the 1996 Act, is a facility or function, and is not dependent upon the particular services offered by means of such facility or function, does the purchase of access to such an element entitle, or indeed obligate the requesting carrier to provide the customer with all services, intrastate and interstate, that use the element? Under this reading of the statute, a telecommunications carrier that purchased local switching as a network element would use that element to provide whatever intrastate and interstate switching services the customer desired. As discussed more fully below in section II.B.2.e., such an entitlement or obligation to provide all of the services that a particular network element currently is used to furnish may distinguish network elements from existing access services.

85. In addition, we request comment on the relationship between section 251(c)(3), concerning unbundling, and section 251(c)(4), which addresses resale of incumbent LEC services. Specifically, may requesting carriers order and combine network elements to offer the same services an incumbent LEC offers for resale under subsection (c)(4)? Does subsection (c)(3) in effect provide new entrants with an alternative way to ''resell'' the services of incumbent LECs in addition to the specific resale provision in subsection (c)(4)? In this regard, we note that section 252(d) provides different pricing standards for these two subsections, and we ask commenters to address the implications of this difference. Some parties have asserted, for example, that allowing interexchange carriers to offer

the same services over combined LEC network elements that the LEC already offers would enable such carriers to circumvent the section 271(e)(1) joint marketing restriction. To the extent that section 251(c)(3) contemplates the purchase of unseparated facilities (*i.e.* facilities used to provide both intra- and interstate services), as discussed above, we note that a telecommunications carrier would not necessarily be purchasing the same service(s) it would under section 251(c)(4). Does the difference, if any, between network elements and the services provided by means of such elements play a meaningful role in distinguishing these two subsections? For example, under the Illinois Local Switching Platform concept, discussed in detail below, requesting carriers may offer services by means of the unbundled platform that the incumbent LEC does not offer. We invite parties to comment on these and any other issues raised by the interplay of subsections (c)(3) and (c)(4). Parties should base their comments on specific statutory language.

(2) Access to Network Elements. 86. Section 251(c)(3) requires incumbent LECs to provide ''access'' to network elements ''on an unbundled basis.'' We interpret these terms as requiring incumbent LECs for a fee to provide requesting carriers with the ability to obtain a particular element's functionality, such as a local loop's function of transmitting signals from a LEC central office to a customer premises, separate from that of other functionalities or network elements, such as the local switch. Further, the term ''unbundled'' suggests that there must be a separate charge for each purchased network element. We seek comment on this and any alternative interpretations of section 251(c)(3).

87. Section 251(c)(3) further mandates that incumbent LECs provide access to network elements on an unbundled basis ''at any technically feasible point.'' Parties are asked to identify and describe, in brief, each network element for which they believe access on an unbundled basis is technically feasible at this time. Further, we seek comment on whether a dynamic definition of ''technically feasible'' is practical for identifying elements beyond those discussed here, and, if so, what such a definition should be. We also ask whether the states, rather than the Commission, may apply the definition during the arbitration process. We further request that parties comment on experiences with providing or purchasing access to elements currently unbundled by the states, and any state approaches to determining the technical feasibility of unbundling elements that the Commission could use in a national model. We also seek comment on whether the technical feasibility of interconnection at a particular point affects, at least in part, the technical feasibility of providing access to a network element on an unbundled basis at that point. Finally, because subsection (c)(3) imposes an affirmative obligation on incumbent LECs to provide unbundled elements, we tentatively conclude that LECs have the burden of proving that it is technically infeasible to provide access to a particular network element. We also tentatively conclude that the unbundling of a particular network element by one LEC (for any carrier) evidences the technical feasibility of providing the same or a similar element on an unbundled basis in another, similarly structured LEC network. We seek comment on these tentative conclusions.

88. In addition to technical feasibility, section 251(d)(2) requires that the Commission ''consider, at a minimum, whether * * * access to such network elements as are proprietary is necessary, and [whether] the failure to provide access to such network elements would impair the ability of the telecommunications carrier seeking access to provide the services that it seeks to offer.'' We seek comment on the extent to which the Commission must ''consider'' these standards, how these standards should be interpreted, and on any additional considerations, such as possible risks to network reliability or other harm. We note that the 1996 Act uses the terms ''technically feasible'' and ''economically reasonable'' together in other sections of the Act, and we seek comment on what effect the absence of the term ''economically reasonable'' in section 251(c)(3) has on economic considerations. *See, e.g.*, 1996 Act, sec. 101, § 254(h)(2). The House Committee, in considering H.R. 1555, dropped the term ''economically reasonable'' from its unbundling provision, reporting that ''this requirement could result in certain unbundled * * * elements * * * not being made available.'' H. Rep. 104–204, 71 (1995). Further, we request comment on whether this omission could be construed to imply that Congress intended for carriers requesting unbundling to pay its cost, and on whether that construction is consistent with the intent of the 1996 Act. In any event, access to network elements must be available at rates, terms, and conditions that are just, reasonable, and nondiscriminatory. 1996 Act, sec. 101, § 251(c)(3).

89. We also request comment on whether the Commission should establish minimum requirements governing the ''terms'' and ''conditions'' that would apply to the provision of all network elements. For example, should the Commission require incumbent LECs to provide network elements using the appropriate installation, service, and maintenance intervals that apply to LEC customers and services? Alternatively, should the Commission require LECs to comply with national or industry-based standards? Would minimum national requirements for electronic ordering interfaces reduce the time and resources required for new entrants to compete in regional markets? What standard unbundling terms and conditions, if any, should the Commission use in evaluating applications under section 271(b)? Would national rules aid the states in arbitrating agreements within the statutory period? If parties believe that the Commission should specify minimum terms and conditions, we seek comment on what those terms and conditions should be, and how those terms and conditions might be enforced. Parties are encouraged to cite specific examples from the states that could be incorporated into minimum national requirements.

90. In addition, we request comment on the meaning of the requirement in section 251(c)(3) that LECs provide unbundled network elements ''in a manner that allows requesting carriers to combine such elements in order to provide * * * telecommunications service.'' For example, should the required facilities or services associated with a particular network element vary depending on the services the requesting carrier wishes to provide or on the types of facilities the requesting carrier will use in combination with the requested elements? We also seek comment on the relationship between this provision and section 251(d)(2)(B), discussed above, which requires the Commission to consider whether the failure to provide access to an element would impair the ability of a requesting carrier to provide a desired service.

91. Section 251(c)(3) further requires incumbent LECs to provide requesting carriers with ''nondiscriminatory'' access to unbundled network elements. That section also requires LECs to provide access on ''terms, and conditions that are * * * nondiscriminatory.'' We seek comment on what minimum requirements, if any, we should adopt to ensure that LECs do not discriminate among requesting carriers. For example, one criterion might be whether an end user could perceive any differences in the quality

of service provided by one carrier as compared with another. Another criterion might be to require LECs to make it as easy to switch local service providers as it is for customers to switch interexchange providers. Further, unlike subsection (c)(2), which requires that interconnection offered requesting carriers be ''at least equal in quality to that provided'' by the LEC itself, subsection (c)(3) does not contain such a requirement. Nevertheless, we request comment on whether we can and should prohibit an incumbent LEC from providing requesting carriers with access inferior to that which it provides itself.

(3) Specific Unbundling Proposals. 92. We now consider particular network elements to which incumbent LECs must provide access on an unbundled basis under section 251(c)(3). As discussed above, we propose to identify a minimum number of elements that incumbent LECs must unbundle, and we seek comment on what minimum requirements of unbundling, if any, the Commission should adopt for each element. AT&T, for example, has publicly advocated that the Commission should require the unbundling of eleven network elements: loop distribution, concentration, and feeder plant; local and access tandem switches; dedicated and common transport; SS7 signalling links, signal transfer points, and signal control points; and operator services. MCI advocates, in addition, the unbundling of loop and trunk ports from local switching. Some LECs favor the unbundling of significantly fewer elements.

93. We address below four categories of elements: loops, switches, transport facilities, and signaling and databases. For each of the proposed network elements discussed in these categories, we request that parties comment on the following issues:

(1) the technical feasibility of providing access to that or an equivalent element on an unbundled basis, how such access should be provided, and any demonstrable network reliability concerns;

(2) whether and to what extent LECs currently allow other carriers to access such elements;

(3) whether the Commission should establish a standard for defining the element, and if so, what level of technical detail is required in the definition, and what facilities or functionalities should be included or excluded from the definition;

(4) whether the Commission should establish minimum requirements for the terms and conditions of provisioning the element, and if so, what they should be;

(5) whether the failure to unbundle the element would impair a requesting carrier's ability to provide the services that it seeks to offer;

(6) whether proprietary interfaces or technology are involved in providing the element, and if so, whether unbundled access to the element is necessary; and

(7) any other issues presented by the unbundling of this element that are important to effectuating the goals of section 251(c)(3) and the 1996 Act.

(a) Local Loops. 94. We propose to require incumbent LECs to provide local loops as unbundled network elements. The Joint Explanatory Statement accompanying the 1996 Act expressly cites the local loop as an example of a network element. In addition, the competitive checklist of section 271(c)(2)(B) specifies the unbundling of local loops from local switching or other services as a precondition to BOC provision of in-region interLATA services. Further, several states have ordered, and LECs currently offer, loops unbundled from local switching, and thus we tentatively conclude that the unbundling of local loops is technically feasible.

95. We first seek comment on whether and the extent to which the Commission should prescribe a set of minimum requirements for unbundling and provisioning loops. For example, we could require only that incumbent LECs must, upon request, provide at central offices individual transmission links to customer premises regardless of the technology involved. It appears, however, that in states that already have ordered loop unbundling, the general requirement to unbundle is merely the first step in a process of providing new entrants with meaningful facilities with which to compete.

96. The New York Commission, for example, having anticipated and addressed many of the problems associated with unbundling loops and ports, is still grappling with issues such as operational interfaces between carriers, the timing of loop provisioning relative to number porting, and underlying delivery systems supporting loop-provisioning. In view of such complex and resource-intensive issues, we seek comment on whether there are minimum requirements that would build upon the progress of preexisting state initiatives and facilitate the provisioning of unbundled loops. What requirements, for example, would avoid the need for duplicative decision-making by states and variations among states in the effectiveness of loop unbundling, while better enabling new entrants to plan and fund regional networks? To what extent is the avoidance of interstate duplication and variation necessary to achieving the goals of the 1996 Act? How should the Commission structure national requirements to provide sufficient flexibility to carriers and the states for use of different or new ''loop'' technologies or services?

97. In addition, we tentatively conclude that we should require further unbundling of the local loop. We seek comment on which subloop elements are technically feasible to unbundle. For example, the Commission could require incumbent LECs to provide access to loop feeder and distribution plant on an unbundled basis at remote switching or concentration sites, in addition to access to the switching or concentration equipment itself. Hawaii, for example, divides local loop functions into these three categories. Illinois also recently required LECs to provide subloop elements in response to a bona fide request. Such requests may come from carriers deploying cable or fiber feeder facilities that lack distribution plant. We thus seek comment on whether requiring access to loops prior to their concentration or multiplexing would allow requesting carriers to provide services they could not provide at LEC central offices, and whether such access would involve proprietary equipment. Finally, we request comment on what minimum requirements for subloop unbundling, at this early stage where few if any states have addressed the issue, would pave the way for rapid adoption and provision of subloop elements.

(b) Local Switching Capability. 98. In addition to the local loop, we tentatively conclude that incumbent LECs should provide unbundled local switching capability as a network element. The Joint Explanatory Statement expressly cites switching equipment as an example of a network element. In addition, the competitive checklist of section 271(c)(2)(B) specifies the unbundling of local switching from transport, local loop transmission, or other services as a precondition to BOC provision of in-region interLATA services. Finally, we believe unbundling of local switching capability is critical to the implementation of section 251(c)(3) and the provision of competing telecommunications services.

99. Unlike a local loop, local switching equipment is often shared by thousands of customers. As a result, it may be difficult to identify or define the use of such equipment for a particular customer. One possible way to identify

a switching element is to define the element in terms of the *capacity* of a local switch to switch traffic from line to line, line to trunk, trunk to line, or trunk to trunk. This is both the most essential and rudimentary capacity of a local switch. Today's modern switches, however, are capable of significantly more advanced functions, such as call waiting, conference calling, signaling, and centrex. Under the 1996 Act's definition of network element, these functions could constitute individual network elements separate from the basic switching functionality, or could be grouped in part or whole with the basic functionality, which would allow requesting carriers, in turn, to offer the functions they desire.

100. Illinois, for example, is investigating a ''local switching platform'' approach to unbundling the local switch. The platform is described in terms of ''virtual'' switch capacity, including all the services and functions performed by the switch on a per line basis, such as dialtone, telephone number provision, all CLASS and CCF features, originating and terminating usage, and 911 services. According to its advocates, unlike merely reselling a single switching service, under the platform structure requesting carriers incur added risk because the cost of the platform includes the cost of all functionalities provided by the switch on a per line basis, regardless of the functionalities ultimately purchased by an end user. This added risk translates into added profits if the requesting carrier is able to sell a combination of these switching functionalities at a higher profit than would have been possible under a simple resale arrangement. Moreover, because requesting carriers are not tied to the incumbent LEC's retail price structure, concerns about possible price squeezes are reduced.

101. Other states have defined a switching ''port,'' which usually includes all the capabilities of the local network provided at the main distribution frame of a LEC central office. For example, New York treats a port essentially as an interconnection point into the rest of the NYNEX network. Thus a port defined in this way is not in the nature of an unbundled element that a competing carrier could combine with its own transport and other loop facilities to provide a competing telecommunications service. Rather, such a port is effectively equivalent to the LEC's bundled retail local service offering minus the loop. We seek comment on whether such a definition of ''port'' is consistent with the requirements of section 251(c)(3), especially the requirement that incumbent LECs provide elements in a manner that allows carriers to combine them to provide telecommunications services. Further, we seek comment on alternative definitions of ''port,'' and on whether the port should be a separate unbundled element from the switch. For example, MCI defines a port as the link from the LEC main distribution frame to the switch.

102. We also request comment on these and alternative approaches to unbundling the local switch, and on the technical feasibility of such approaches. Under the switching platform approach, for example, what control, if any, can and should requesting carriers have over the operations of a LEC local switch, and is access to proprietary functions or equipment necessary? Further, should the Commission identify several permissible approaches to switch unbundling, and what minimum requirements, if any, should apply? What requirements of switch unbundling would help the Commission in evaluating applications under section 271(b), and the states and the courts in arbitrating and evaluating agreements between carriers?

103. Finally, in conjunction with the next section addressing transport facilities, we request comment on whether requirements governing a local switching element could be tailored to apply to a tandem switching element. Parties should address the issues discussed above in the context of tandem switches.

(c) Local Transport and Special Access. 104. We also propose to require incumbent LECs to provide access to unbundled transport facilities as network elements. We note that the competitive checklist of section 271(c)(2)(B) requires the provision of local transport from the trunk side of a LEC switch unbundled from switching or other services as a precondition to BOC provision of in-region interLATA services. We tentatively conclude that the unbundling of local transport and special access facilities is technically feasible. We note that the Commission's action in the *Expanded Interconnection* proceeding effectively required substantial unbundling of these facilities.

105. We propose to require unbundling of LEC facilities that correspond to the current interstate transport and special access rate elements. For direct-trunked transport networks, transport trunks would be unbundled from local switches, and the link from the serving wire center (SWC) to the IXC point of presence (POP) would be unbundled from the link between the central office and the SWC. For tandem-switched transport networks, the elements could include, among other options, unbundled trunks from the end office to the tandem office, trunks from the tandem office to the SWC, trunks from the SWC to the IXC POP, and the tandem switch itself. Finally, for special access we propose to require the unbundling of channel termination facilities from interoffice facilities.

106. We seek comment on the technical feasibility of unbundling direct-trunked and tandem-switched transport and special access facilities in this or in any alternative manner, and on how LECs should unbundle any other network facilities used to transport traffic from LEC central offices to IXC POPs or to other LEC central offices. As discussed above, we ask parties to address the unbundling of tandem switches in accordance with the issues raised in the local switching section, and comment on any issues pertaining exclusively to tandem switching.

(d) Databases and Signaling Systems. 107. The 1996 Act contemplates the unbundling of incumbent LECs' signaling systems and databases. Congress specifically included ''databases'' and ''signaling systems'' in the definition of network elements. The 1996 Act also requires BOCs to provide access to ''databases and associated signaling necessary for call routing and completion'' as a precondition for entry into in-region interLATA services. Therefore, we tentatively conclude that requiring incumbent LECs to unbundle their signaling systems and databases is consistent with the intent of the 1996 Act.

108. Many incumbent LECs have Signaling System 7 (SS7) networks that are separate from, but interconnected with, the telecommunications networks that carry voice and data communications between end users. SS7 networks perform three primary functions: (1) call set up, which establishes transmission paths for calls; (2) access to remote databases, which provides specialized call routing information to switches; and (3) custom local area signaling service (CLASS) features, such as caller ID, which require the transmission of certain information between the calling and called parties. We request that commenters identify the points at which carriers interconnect with LEC SS7 networks today and the signaling and database functions currently provided by incumbent LECs on an unbundled basis. Commenters should also discuss

the technical feasibility of establishing other points of interconnection and other unbundled signaling and database functions not currently offered by incumbent LECs.

109. An example of unbundling particular signaling and database elements is Colorado's requirement that incumbent LECs provide unbundled access to signaling links, signal transfer points, and service control points as well as access to non-proprietary signaling protocols used in the routing of local and interexchange traffic, 800 service, alternative billing service, and line information database (LIDB) service. Colorado has not specified whether access to signaling and databases is limited to those particular services. Hawaii has taken a similar approach by requiring incumbent LECs to unbundle signaling links, signal transfer points, and service control points, and has not specified which services provided by these network elements must be made available to competitors. By contrast, Louisiana has ordered unbundled access to incumbent LEC databases for all services that the incumbent LEC provides itself, including 800 service, LIDB, and advanced intelligent network (AIN) services. Does the variation among the Colorado, Hawaii, and Louisiana regulations governing unbundled signaling and databases reflect differing circumstances that should be accommodated in our rules? Would such variation among states be consistent with the goals of the 1996 Act? Would new entrants be better served by uniform federal rules concerning unbundled access to signaling systems and databases? If so, would any of the regulations adopted by the states be useful to incorporate into national rules?

110. We also seek comment on the relative importance to potential entrants of the various functions performed by incumbent LECs' signaling systems and databases. For example, call set up plays an important role in the transmission of calls that are routed through more than one switch. Thus, it would appear that such functionality will be needed by entrants to provide competing local exchange service. However, we are aware that there are alternative suppliers of call set up services other than incumbent LECs. What bearing, if any, should this have on our adoption of unbundling rules for call set up? Are there existing suppliers for other functions performed by incumbent LECs' signaling systems and databases?

111. In addition, a competitor may seek to provide certain call processing features to its customers by reselling the incumbent LEC's call processing services. We seek comment on the importance of unbundled access to the incumbent LEC's advanced call processing features, such as single number service, in the market entry decisions of potential competitors. We also seek comment on whether the software ''building blocks'' used by incumbent LECs to create call processing services are network elements to be unbundled. Given the array of existing and potential call processing services that could be provided by incumbent LECs' signaling systems and databases, we seek comment on whether the establishment of uniform national guidelines governing all call processing services provided via remote databases would facilitate the state arbitration process, judicial review, and/or Commission activities under section 253. We also seek comment on whether it would be consistent with the 1996 Act to permit variation among states with regard to unbundling call processing services provided via remote databases.

112. Under another scenario, a competitor that is providing resold local exchange service might seek to distinguish its offerings by connecting its own call processing database to the incumbent LEC's network, which would allow the competitor to provide call processing features not offered by the incumbent LEC. Enabling new entrants to offer their own call processing services in this way would likely stimulate local exchange competition. We seek comment on whether this type of interconnection is technically feasible without jeopardizing network reliability.

113. We also note that in our *Intelligent Networks* (IN) proceeding, we are considering unbundling advanced intelligent network (AIN) elements, which include signaling systems and databases. *Intelligent Networks,* Notice of Inquiry, 56 FR 65721 (12/18/91); *Intelligent Networks,* Notice of Proposed Rulemaking, 58 FR 48623 (9/17/93). In the IN NPRM, we tentatively proposed ordering Tier 1 LECs to provide access to several specific AIN elements in order to promote competition in the provision of AIN services. Subsequently, a group of Tier 1 LECs filed a joint proposal calling for a two-year testing plan to explore methods of third-party interconnection to LEC AINs. We seek comment on what role, if any, the LEC proposal for a testing program should play with regard to access to signaling and database elements that we address in this proceeding. We incorporate the record compiled in the IN proceeding into this proceeding by reference.

114. We further note that our IN proceeding has focused on providing all interested third parties with access to Tier 1 LECs' AIN elements, primarily for the purpose of providing competing AIN services. Section 251 of the 1996 Act provides any requesting telecommunications carrier unbundled access to incumbent LECs' network elements ''for the provision of a telecommunications service.'' We seek comment on whether mandating the unbundling of signaling systems and databases pursuant to section 251 would be sufficient to meet the objectives of the IN proceeding. To the extent that section 251 does not require incumbent LECs to provide certain third parties with access to unbundled AIN elements, we seek comment on whether we should use our section 201 authority to require such access. We also seek comment on how the unbundling of signaling systems and databases in this proceeding should affect our actions in the IN proceeding.

115. Requiring incumbent LECs to provide unbundled access to their signaling and database networks could also potentially permit competing carriers to gain access to competitively sensitive data. Louisiana has addressed this potential problem by specifically prohibiting incumbent providers from accessing the customer proprietary network information (CPNI) of an interconnecting carrier in order to market services to the interconnecting carrier's customers. We seek comment on whether such a restriction should be implemented in federal standards. We plan to initiate a proceeding in the near future to implement the provisions of the 1996 Act that address CPNI. Are there other state regulations concerning access to competitor's CPNI that would prevent this type of anticompetitive conduct while allowing us to establish interconnection and unbundling rules for signaling and database facilities?

116. Finally, we request comment on other network elements to which the Commission should require access on an unbundled basis, and specific standards that should govern their unbundling. For example, the statutory definition of network element includes ''subscriber numbers'' and ''information sufficient for billing and collection or used in the transmission, routing, or other provision of a telecommunications service.'' We tentatively conclude that these elements should be unbundled and we request comment on the standards we should set for such unbundling. In addition, section 271 of the 1996 Act requires incumbent LECs

to unbundle ''operator call completion services'' as a precondition for providing in-region, interLATA services. In light of this, we tentatively conclude that incumbent LECs should be required to unbundle operator call completion services as a network element pursuant to section 251(c) of the Act. We seek comment on this tentative conclusion.

d. Pricing of Interconnection, Collocation, and Unbundled Network Elements. (1) Commission's Authority to Set Pricing Principles. 117. Section 251, in some instances, explicitly sets forth requirements regarding rates for service, interconnection and unbundled elements. For example, sections 251(c)(2), (c)(3), and (c)(6) require that incumbent LECs' ''*rates,* terms and conditions'' for interconnection, unbundled network elements, and collocation be ''just, reasonable, and nondiscriminatory,'' and, with respect to interconnection and unbundled elements, in accordance with section 252. Section 251(c)(4) requires that incumbent LECs offer ''for resale at wholesale *rates* any telecommunications service that the carrier provides at retail to subscribers who are not telecommunications carriers,'' without unreasonable conditions or limitations. Section 251(b)(5) requires that all LECs ''establish reciprocal *compensation* arrangements for the transport and termination of telecommunications.'' We tentatively conclude that this statutory language establishes our authority under section 251(d) to adopt pricing rules to ensure that rates for interconnection, unbundled network elements, and collocation are just, reasonable, and nondiscriminatory. We tentatively conclude that we have statutory authority to define what are ''wholesale rates'' for purposes of resale, and what is meant by ''reciprocal compensation arrangements'' for transport and termination of telecommunications. We seek comment on this tentative conclusion.

118. We note that, under the statutory framework established by Congress, states have the critical role under section 252 of establishing rates pursuant to arbitration and of reviewing rates under BOC statements of generally available terms. Rates for both arbitrated agreements and BOC statements of generally available terms must be in accordance with section 252(d), which sets forth specific ''pricing standards'' for interconnection and unbundled elements, wholesale services, and transport and termination of traffic under reciprocal compensation arrangements. The 1996 Act appears to give a role to both the states and the Commission regarding rates for interconnection, unbundled network elements, wholesale services, and reciprocal compensation arrangements. We believe that the statute, and in particular our statutory duty to implement the pricing requirements of section 251, as elaborated in section 252, is reasonably read to require that we establish pricing principles interpreting and further explaining the provisions of section 252(d) for the states to apply in establishing rates in arbitrations and in reviewing BOC statements of generally available terms and conditions. Such an approach appears to be consistent with both the language and the goals of the statute.

119. Establishing national pricing principles would be likely to improve opportunities for local competition by reducing or eliminating inconsistent state regulatory requirements, thereby easing recordkeeping and other administrative burdens. In addition, national pricing principles would be likely to increase the predictability of rates, and facilitate negotiation, arbitration, and review of agreements between incumbent LECs and competitive providers. We seek comment on these tentative conclusions. We also seek comment on the potential consequences if the Commission does not set specific pricing principles. For example, would the lack of consistent rates, even in contiguous geographic areas, create a barrier to entry or to deployment of facilities throughout a multistate market? In addition, if the Commission is required to assume the responsibility of the state commission, pursuant to section 252(e)(5), would an absence of federal pricing principles impede the Commission's ability to arbitrate or review an agreement in a timely fashion?

120. Finally, consistent with our earlier discussion that sections 251 and 252 do not make jurisdictional distinctions between interstate and intrastate services and facilities, we tentatively conclude that the pricing principles we establish pursuant to section 251(d) would not recognize any jurisdictional distinctions, but would be based on some measure of unseparated costs. We do not believe section 2(b) requires a different conclusion. We seek comment on this tentative conclusion. We also seek comment on whether we need to revise our cost allocation rules in Part 64, or whether we need to adopt a similar set of cost allocation rules to remove the costs and revenues of services provided pursuant to sections 251 and 252 before the separations process is applied.

(2) Statutory Language. 121. Section 251(c)(2)(D) requires that incumbent LECs provide interconnection ''on rates, terms, and conditions that are just, reasonable, and nondiscriminatory, in accordance with * * * the requirements of this section and section 252.'' Section 251(c)(3) similarly requires incumbent LECs to provide ''nondiscriminatory access to network elements on an unbundled basis * * * on rates, terms and conditions that are just, reasonable, and nondiscriminatory in accordance with * * * the requirements of this section and section 252.'' Likewise, section 251(c)(6) requires incumbent LECs to provide ''on rates, terms, and conditions that are just, reasonable, and nondiscriminatory, for physical collocation of equipment.'' Section 252(d)(1) provides that state determinations of the just and reasonable rate for the interconnection of facilities and equipment for purposes of subsection (c)(2) of section 251, and the just and reasonable rate for network elements for purposes of subsection (c)(3) of such section—

(A) shall be (i) based on the cost (determined without reference to a rate of return or other rate-based proceeding) of providing the interconnection or network element * * *, and (ii) nondiscriminatory, and

(B) may include a reasonable profit.

We seek comment on the proper interpretation of each of these statutory provisions. We also seek comment on any specific principles that parties believe the Commission should promulgate to ensure that the rates established or approved by states are just, reasonable, and nondiscriminatory. We seek comment below on the national pricing principles that states might apply in setting and reviewing rates for interconnection, collocation, and access to unbundled network elements. We also seek comment on what enforcement or monitoring mechanism, if any, the Commission or the industry should adopt to ensure that all carriers comply with any pricing principles that the Commission establishes.

122. Further, we believe that any pricing principles we adopt should be the same for interconnection and unbundled network elements, because sections 251 (c)(2) and (c)(3) and 252(d)(1) use the same standard for both types of services. We invite parties to comment on whether there are any reasons to make a distinction. In addition, we believe that the same pricing rules that apply to interconnection and unbundled network elements should apply to collocation as required under section 251(c)(6). We seek comment on this issue. In

particular, we seek comment on whether the absence of any pricing rule for collocation in section 252 has any legal significance with regard to our authority to specify rules for pricing of collocation services. Alternatively, should collocation be considered a subset of interconnection services, pursuant to sections 251(c)(2) and 252(d)(1) for purposes of the statutory pricing principle?

(3) Rate Levels. 123. As previously set forth, section 252(d)(1) provides that state determinations of just and reasonable rates for interconnection and providing network elements shall be ''based on the cost (determined without reference to a rate-of-return or other rate-based proceeding),'' ''nondiscriminatory,'' and ''may include a reasonable profit.'' We tentatively conclude that this language precludes states from setting rates by use of traditional cost-of-service regulation, with its detailed examination of historical carrier costs and rate bases. Instead, the statute appears to contemplate the use of other forms of cost-based price regulation, such as price cap regulation that is indirectly based on costs, or the setting of prices based on a forward-looking cost methodology that does not involve the use of an embedded rate base, such as long-run incremental cost (LRIC). We seek comment on this view of the meaning of section 252(d)(1).

124. Economists generally agree that rates based on LRIC give appropriate signals to producers and consumers and ensure efficient entry and utilization of the telecommunications infrastructure. They further agree that competitive markets, over the long run, tend to force prices toward LRIC. A broad range of parties appears to agree that rates for interconnection and unbundled elements should be based on some type of LRIC methodology, such as, for example, using what some parties refer to as a ''total service long-run incremental cost'' (TSLRIC) approach. In the following section, we consider whether we should adopt, a LRIC-based pricing methodology for states to use to set interconnection and unbundled element rates under the 1996 Act. Under such an approach, if voluntary negotiations between parties were unsuccessful, the state commissions would conduct arbitration proceedings under section 252 in order to develop the specific factual information required to specify the actual rates in accordance with the national policy. As discussed at greater length below, however, there appear to be considerable differences of opinion as to the precise form of the LRIC methodology that should be used. *See, e.g.,* Ameritech's March 25, 1996 submission at 9–10 (TSLRIC, joint and common costs, and residual costs to the extent they reflect forward-looking costs should be used to determine the pricing standard for interconnection and unbundled network elements); AT&T Submission at 47 (TSLRIC of a network element includes both the fixed equipment costs associated with the element and the normal competitive return to the capital that must be invested in order to supply that element). For a discussion of the precise definitions of the terms LRIC and TSLRIC, *see infra* ¶¶ [123–130]. The term ''long-run service incremental cost'' (LRSIC), used by some states and parties, appears to be synonymous with the term TSLRIC. Further, while pricing based on LRIC may be the theoretical ideal, significant practical and administrative problems are likely to arise in determining the LRIC of specific services and facilities for particular incumbent LECs, especially in the short term, given the contentious and often time-consuming proceedings that may be necessary to resolve the complex issues raised by incremental cost studies. We explore these and other issues concerning the use of a LRIC-based pricing methodology in the following section.

125. As an alternative to our specifying a methodology for states to follow in setting prices under section 252(d)(1), we could establish outer boundaries for rates for interconnection and unbundled network elements, within which states would have a range of flexibility to select a cost-based method of determining interconnection and unbundled element rates. In particular, we could establish an administratively simple methodology that is relatively easy to apply, potentially using proxies for cost-based rates, to set rate ceilings or upper bounds on the range of state ratemaking flexibility. The use of a proxy to set the ceiling would reduce the administrative burden that is inherent in the application of a LRIC-based methodology, and thus may be especially attractive in the near term. We discuss this proxy-based ceiling approach in detail below. We also discuss below the extent to which embedded (or historical) costs are relevant to the pricing rule for interconnection and unbundled network elements in the 1996 Act, the relationships between this pricing rule and policies on universal service and access charge reform, and whether certain methodologies are so fundamentally inconsistent with the 1996 Act that the statute precludes states from using such methodologies.

(a) LRIC-Based Pricing Methodology. 126. As noted above, most economists—and a broad range of parties that have submitted materials related to this proceeding—appear to agree that rates for interconnection and unbundled elements ideally should be based on a LRIC-type methodology. The economists and parties, however, do not appear to agree on the specifics of a LRIC or TSLRIC methodology. Parties sometimes assign different meanings to the same terms. We therefore ask commenters advocating this approach to define with specificity the costing methodology that they support. In particular, we seek comment on precise definitions for the following terms: LRIC, TSLRIC, forward-looking costs, joint costs, common costs, shared costs, and stand-alone costs. We also seek comment on the definition of the following related terms: embedded costs, fully distributed costs (FDC), overheads, contribution, and residual costs. For example, many years ago the Commission defined LRIC as including ''the full amount of incremental investment and expenses which would be incurred by reason of furnishing additional quantities of service, whether in a new or an existing service category,'' and added that, in estimating LRIC, one ''determine[s] prospectively the effect on total costs, including the effect on common costs, * * * of adding units of service.'' Does this continue to be an appropriate definition of LRIC? In what respects, if at all, does a TSLRIC analysis differ from a LRIC analysis? Commenters should explain how any methodology they support should be calculated, and how such an approach differs from other possible costing methodologies.

127. We note that some states already have adopted LRIC-based pricing methodologies to set rates for interconnection services and unbundled network elements that new entrants purchase from incumbent LECs. For example, the Illinois Commerce Commission has promulgated detailed rules regarding the use of TSLRIC studies to derive the rates for specified services offered by incumbent LECs. Michigan law provides that incumbent LECs' rates for interconnection will be set at TSLRIC levels until January 1, 1997. The California Public Utilities Commission has set prices for unbundled elements based on a forward-looking calculation of TSLRIC, which excludes shared and common costs. The New York Public Service Commission has allowed incumbent LECs to establish tariffed rates for interconnection offerings with rates

based on incremental cost plus, where appropriate, offsets to account for contribution loss and the impacts of ''stranded plant.'' Finally, the Local Competition Work Group of the NARUC Staff Subcommittee on Communications has recommended that network component prices should recover at least TSLRIC and, subject to state commission oversight and review, may include ''a markup over TSLRIC to reflect a reasonable allocation of joint and common costs.''

128. We invite parties to comment on the costing methodologies used by these and other states, and on the extent to which these approaches are consistent with the pricing principles and goals of the 1996 Act. We also seek comment on whether the approach taken by any state regarding pricing interconnection, collocation, and unbundled network elements can be used as a model for a federal policy for these services and facilities. Are the existing state standards substantially the same or materially different? If there are significant differences, what are the costs and benefits of such variation to economic efficiency and a national, pro-competitive communications policy? We note that, while several states have identified specific costing methodologies and have ordered incumbent LECs to offer unbundled network elements at rates based on LRIC, most states have not yet acted in this area.

129. We can consider a number of different approaches if we were to require a LRIC-based methodology for states to follow. For example, we could require that prices be set based on a narrowly defined LRIC of interconnection service and unbundled network elements, with no allowance for joint or common costs, overheads, or any other added increment. There may, however, be a problem with basing rates on LRIC alone if there are significant joint and common costs among network elements, even if such costs are determined on a forward-looking basis. As a second option, we could require prices to be based on the LRIC of the applicable service or unbundled element plus a reasonable allocation of forward-looking joint and common costs. Even then, however, under some LRIC methodologies, the sum of all LRIC-based service and element pricing may not cover all of the firm's forward-looking costs. Finally, Ameritech has suggested a LRIC-based methodology that includes, in addition to TSLRIC, an allocation of joint (or shared) costs, common costs (or overhead), and residual costs. We seek comment on these alternative approaches, or variations, in terms of their compliance with the statute, including the statutory provision that rates ''may include a reasonable profit,'' and their respective advantages and disadvantages.

130. We also seek comment on how, if rates are to be set above LRIC, to deal with the problems inherent in allocating common costs and any other overheads. First, it may be possible to minimize the costs to be allocated as joint and common by identifying a substantial portion of costs as incremental to a particular service or element. The feasibility of minimizing the costs to be allocated as joint and common may depend, in part, on the degree to which unbundled elements are disaggregated. Alternatively, joint and common costs could be minimized by establishing a pricing standard at a higher level of aggregation than individually unbundled subelements. For instance, the pricing standard could apply to loops, even though there may be sub-loop unbundling. A second approach would be to allocate common costs and overhead among services in an inverse relationship to the sensitivity of demand for each of the services. This ''Ramsey'' approach, in theory, minimizes reductions in consumer welfare due to prices above LRIC. On the other hand, Ramsey pricing principles were developed in the context of regulated monopolies, and may not be desirable for markets in which competition is developing. A third approach would be to allocate common costs and overheads among all services based on some specified allocator. For example, shared costs and overheads could be allocated among services in proportion to each service's LRIC or direct costs, or could be apportioned based on some measure of usage. We seek comment on these approaches, and on the expected magnitude of forward-looking costs under each approach that cannot be attributed to specific services or elements. We also seek comment on whether, regardless of the method of allocating common costs, we should limit rates to levels that do not exceed stand-alone costs.

131. Parties should specify their reasons for supporting or objecting to a particular costing model, and on what types of LRIC-based pricing methodology would be consistent with the 1996 Act. Parties that favor a particular methodology should explain how their proposals satisfy the statutory requirement that cost-based rates be determined ''without reference to a rate-of-return or other rate-based proceeding.'' They should also address how their methodologies would comply with the statutory requirement that rates for interconnection and unbundled elements ''may include a reasonable profit.'' We also seek comment on whether the ''reasonable profit'' provision should be interpreted to mean that rates should yield reasonable levels of return on capital (including assessment of risk). Parties are encouraged to provide examples of states that have used the particular methodology that they support, or other illustrative evidence to indicate how such a standard would be applied. Should the LRIC-based methodology that any particular state has used be adopted as a national policy for interconnection and unbundled elements, or should a number of existing state approaches be identified as acceptable options? We invite parties to propose other approaches, to delineate with particularity how their proposal differs from the approaches described above. Parties should also address the practicality of such approaches in a state arbitration setting, including the extent to which they would be clear and relatively easy to derive with a minimum of controversy and delay, and the administrative burdens associated with such approaches.

132. We also seek comment on a transitional pricing mechanism during an interim time period. Should we adopt an easily implementable interim approach that would address concerns about unequal bargaining power in negotiations, followed by some sort of transition mechanism to a more permanent set of pricing principles? One possible approach would be to require that during an interim period, rates be set at short-run marginal cost. Such an approach might give incumbent LECs an incentive to reach a rapid agreement.

133. We seek comment on whether interconnection and unbundled element rates should be set on a geographically- and class-of-service-averaged basis for each incumbent LEC, or whether some form of disaggregation would be desirable. Unlike with respect to interexchange telephone services, Congress did not address the question of whether interconnection and unbundled element rates should be geographically averaged. On the one hand, averaged rates would be simpler to derive and administer, and would minimize the possibility of unreasonable or unlawfully discriminatory rate differences. On the other hand, averaged rates might be above the cost of service in relatively dense areas, and below cost in less dense areas. This could create uneconomic incentives for competitive entrants to use incumbent LECs'

unbundled network elements rather than deploying their own facilities in high cost areas, even if their costs are lower than those of the incumbent LEC. Conversely, it might create incentives for competitive entrants to deploy their own more costly facilities, rather than using unbundled network elements provided by incumbent LECs, in low cost areas. This problem may be exacerbated if the incumbent LECs' local exchange or exchange access services are priced on a geographically averaged basis. If interconnection and unbundled element rates should be disaggregated, what level of disaggregation would be appropriate—by density pricing zone, LATA, exchange, or some other unit? What types of class-of-service disaggregation are appropriate? For example, should incumbent LECs be permitted to charge different rates for unbundled business and residential loops, or for unbundled loops using different technologies? What rate differentials would be reasonable? We further seek comment on whether some cost index or price cap system would be appropriate to ensure that rates reflect expected changes in unit costs over time.

(b) Proxy-Based Outer Bounds for Reasonable Rates. 134. We also seek comment on the benefits, if any, of adopting a national policy of outer boundaries for reasonable rates instead of specifying a particular pricing methodology. For example, rate ceilings could define the maximum end of the reasonable range within which state commissions could establish rates for interconnection and unbundled elements in the arbitration process pursuant to sections 252 (b) through (e). Properly set rate ceilings would prevent incumbent LECs from setting rates at levels so high as to prevent efficient competitive entry or to allow them to extract monopoly rents, and would ensure that rate levels bear some relationship to costs. If rates are too high, use of unbundled elements will be deterred and therefore competitive entry will take place only if competitors either resell incumbent LECs' existing offerings (using few or none of their own facilities) or use their own facilities to bypass the incumbent LEC network completely. Consequently, setting rates too high would contravene Congress' desire to allow new entrants to compete by purchasing, at cost-based rates, unbundled elements or services of the incumbent LEC network. We therefore seek comment on whether a ceiling to protect against excessive rates for unbundled elements and services would be the best means of furthering the pro-competitive goals of the 1996 Act.

135. We believe that, to be consistent with the pricing principles of the 1996 Act, any mechanism used to set rate ceilings for interconnection services and unbundled elements should: (1) make it possible for competitors efficiently to enter the local exchange market, even if all elements are priced at the rate ceiling; (2) constrain incumbent LECs' ability to preclude efficient entry, for example, by manipulating overheads and the allocation of common costs between services; and (3) be as simple to administer as possible. We seek comment on this approach, and request parties that favor a particular approach to explain how that approach is consistent with these principles.

136. Rate ceilings could be derived using a proxy or surrogate for cost-based rates that does not require use of a cost study. Such a proxy could approximate a rate derived through a detailed cost study, and could establish a level above which rates set by states would be too high to allow efficient entry by competitors. Such an approach might well be simpler and speedier to implement than a LRIC-based methodology. A proxy also might reduce or eliminate the need for recordkeeping and examinations of carrier rate bases, consistent with the deregulatory thrust of the 1996 Act. A proxy also would address the concern that incumbents, which have the best information about their own costs, might withhold or otherwise restrict access to those data. Finally, carriers may have an incentive to manipulate their costs and thus their rates. Using a methodology not directly related to costs could remove this incentive. We seek comment on the use of a proxy for a cost-based rate ceiling. Would setting a ceiling based on a proxy fulfill the statutory mandate of section 252(d)(1) and the obligation under section 251 to ensure that rates are just and reasonable? We also seek comment on other possible approaches that would satisfy the requirements of the statute.

137. One method for establishing proxies as a ceiling would be to use generic or averaged cost data. For example, some measure of nationally-averaged costs could be used in lieu of the actual costs of each incumbent LEC. Alternatively, a generic cost study could be used. For example, we could use the Benchmark Cost Model submitted by MCI, Sprint, NYNEX and US WEST in the record of CC Docket No. 80–286, or the Hatfield study submitted by MCI. We seek comment on whether this or other cost studies would serve as an appropriate proxy for constraining rates that states may set for interconnection and unbundled network elements. We also seek comment on the extent to which any study we rely on in establishing proxies should reflect geographically divergent factors such as population density.

138. A second method for establishing proxies would be to use rates in existing interconnection and unbundling arrangements between incumbent LECs and other providers of local service, such as neighboring incumbent LECs, CMRS providers, or other new entrants in the same service area. Possible disadvantages of using existing interconnection arrangements, however, are that they may reflect various historical public policy influences that resulted in prices that do not reflect underlying costs, and that they may reflect arrangements between parties with unequal bargaining power. In addition, these arrangements may not include rates for interconnection services or network elements that are comparable with the services and elements to be used by competitive entrants.

139. A third possible method for establishing a ceiling for the pricing of certain unbundled network elements could be a subset of the incumbent LECs' existing interstate access rates, charged for interconnection with IXCs and other access customers, or an intrastate equivalent. This method would have the advantage of setting ceilings that could be relatively easier to derive than ceilings based on cost studies. We would, however, want to be sure that any such ceilings would not effectively become the price targets for interconnection. These tariffs (and intrastate tariffs in many states), first, include flat rates for special access and dedicated transport that we have concluded, in general, are reasonably cost based. These rates could serve as the upper limit for rates for unbundled network elements consisting of transmission facilities between networks or between central offices in the incumbent LEC's network. Second, for the unbundled network elements corresponding to local switching, a ceiling could be the lower of interstate or intrastate local switching access charges—excluding part or all of the transport interconnection charge (TIC) and the carrier common line charge (CCLC), or their intrastate equivalents. Exclusion of the TIC and CCLC would reduce the effective per-minute local switching charges substantially, and intrastate charges could be lower. The use of access charges as a proxy for cost-based rates to derive price ceilings may be reasonable, because interstate access

charges were initially derived based on the accounting costs of incumbent LEC networks after various regulatory allocations, and, for the larger incumbent LECs, these charges have been subject to price cap regulation for five years. Thus, although access charges were not derived based on forward-looking costs, a subset of these charges might provide an appropriate and easily-implemented ceiling. We seek comment on this analysis. We also seek comment on whether this subset of access charges, or some other proxy, could be used on an interim basis, with some transition mechanism to move towards rate ceilings based on economic costs.

140. We seek comment on whether all or part of the CCLC and TIC should be excluded from the ceilings applicable to unbundled local switching or transport elements. The TIC was originally set at a residual level to recover costs not accounted for in our interim restructuring of local transport rates. To the extent that the costs in the TIC may be unrelated to the provision of local switching, a ceiling that included the entire TIC would exceed the incremental cost of those network elements. The CCLC arguably should be excluded from the ceiling because it recovers local loop costs, rather than switching and transport costs. In the *ONA* proceeding, certain interstate prices were established for unbundled features and functions of the local switch. We seek comment on the possible use of these prices as ceilings for the same unbundled elements under section 251.

141. Deriving an appropriate ceiling for unbundled local loops using a method not requiring cost studies clearly raises its own set of difficulties. Using existing interstate access charges is problematic because interstate access charges were designed to recover only 25% of incumbent LECs' unseparated local loop costs, because the interstate access charge regime currently includes two different types of rate elements to recover loop costs—the CCLC and the subscriber line charge (SLC)—that are assessed in different ways to different categories of customers, and because the CCLC is a per-minute charge recovering costs that do not vary with usage. To address the first issue, we seek comment on whether a ceiling for unbundled loop rates could be based on the sum of the following: (1) the existing SLC, (2) an imputed flat-rate charge based on the CCLC paid by a customer with average usage, such as that we permitted Rochester Telephone to implement last year, and (3) some subset of intrastate local exchange rates. We solicit comment on how such a ceiling could be implemented. We recognize that, while using some subset of existing prices as a ceiling may be administratively simple, that ceiling may not tightly correlate with a TSLRIC definition of costs, and thus we seek comment more broadly on other possible administratively simple methods for setting a ceiling for the price of an unbundled loop to be applied by the states in an arbitration under sections 251 and 252. We note that we have referred to a Federal-State Joint Board established under section 254 the question of whether and how the existing subsidy to reduce the level of the SLC should be changed, and we seek comment on how the current system for separating and recovering common line costs, as well as various pending proposals before the Joint Board, should affect our analysis.

142. Using any of the above proxy methodologies, the proxy rate may be usage-sensitive, while a service or element is sold on a flat-rated basis, or vice versa. In those situations the applicable ceiling could be derived through a conversion factor, such as average usage. By usage sensitive, we mean that costs vary by some measure of usage, such as the number of messages or minutes of use. By flat-rated, we mean costs that vary by capacity rather than usage. To convert a per-minute interstate local switching rate to a ceiling for a flat-rate ''switch platform'' charge, the rate could be multiplied by the average total number of minutes through a local switch per month. We seek comment on whether such an average usage factor, a geographically disaggregated usage factor, or some alternative methodology, would be appropriate for converting per-minute rates to flat rates, or vice versa. We also seek comment on how such a proxy-based ceiling could be applied on a service-by-service or element-by-element basis if services are unbundled in different configurations from the methods set forth in the proxy.

143. As the counterpart to ceilings, we seek comment on whether it is necessary or appropriate for us to establish floors for interconnection and unbundled element prices, *i.e.*, the lower end of a reasonable range within which state commissions could establish rate levels. What would be the potential competitive benefits or detriments of setting a floor for interconnection, collocation, and unbundled element rates? Are they needed to protect incumbent LECs from confiscatory regulatory action? If they are needed, how should they be calculated? Below, we discuss a possible pricing rule under which the sum of the prices of unbundled services cannot exceed the retail price for those services if sold on a bundled basis. Under such a rule, if retail rates are below cost-based levels due to universal service or other implicit subsidies, it may be necessary to price some or all of the unbundled services below LRIC in order for their sum not to exceed the subsidized retail rate. How would this affect the implementation of price floors, or the desirability of such floors?

(c) Other Issues. 144. We seek comment on the extent to which embedded or historical costs should be relevant, if at all, to the determination of cost-based rates under section 252(d)(1). Setting rates based on a detailed rate base examination of the incumbent LEC's book costs, with an allocation of residual costs among elements and services, would violate the requirement of section 252(d)(1)(A)(i) that rates for interconnection and network elements be ''based on cost (determined without reference to a rate-of-return or other rate-based proceeding.).'' In economic terms, prices in competitive markets are based on firms' forward-looking costs rather than historic (sunk) costs. We note however, since the statutory language precludes only use of costs determined on the basis of a ''rate-based proceeding,'' it may be permissible to take some account of an incumbent LEC's embedded costs. Given that incumbent LECs provide services over shared facilities and that technological developments are consistently reducing the costs of providing service, setting the price of discrete services and elements equal to the forward-looking LRIC of each service or element is not likely to recover the historical costs of incumbent LECs' networks. We seek comment on the empirical magnitude of the differences between the historical costs incurred by incumbent LECs (or historical revenue streams) and the forward-looking LRIC of the services and facilities they will be providing pursuant to section 251. How much of this differential can be attributed to universal service support flows? To what extent can incumbent LECs reasonably claim an entitlement to recover a portion of such cost differences? According to the Local Competition Work Group of the NARUC Staff Subcommittee on Communications, a competitive local market would make the issue of recovery of ''stranded'' embedded costs moot, at least from a purely economic perspective. It notes, that, in limited circumstances, other considerations

could result in a regulatory decision that some recovery of past investment decisions by incumbents is appropriate. Should we establish LRIC as a long-run standard, but permit some interim recognition of embedded costs in the short run? We seek specific comment on mechanisms for any such transition, including how to determine what costs should be recovered during the transition and, most importantly, how and when any such transition would end.

145. We also solicit comment on whether it would be consistent with sections 251(d)(1) and 254 for states to include any universal service costs or subsidies in the rates they set for interconnection, collocation, and unbundled network elements. For instance, New York has adopted a ''play or pay'' model in which interconnectors who agree to serve all customers in their self-defined service areas (''players'') potentially pay a substantially lower interconnection rate than those who serve only selected customers (''payers''), who are liable to pay additional contribution charges. In the long term, section 254 requires the Commission and the Joint Board established under section 254 to take actions to implement the following statutory principles: ''All providers of telecommunications service should make an equitable and nondiscriminatory contribution to the preservation and advancement of universal service. * * * There should be specific, predictable, and sufficient Federal and State mechanisms to preserve and advance universal service.'' Arguably, these principles can be interpreted as requiring competitively-neutral mechanisms for recovering universal service support, rather than recovering such support through rates for interconnection or unbundled network elements. On the other hand, the statutory schedule for completion of the universal service reform proceeding (15 months from enactment of the 1996 Act) is different from that for this proceeding (6 months from the date of enactment of the 1996 Act). Also, intrastate universal service mechanisms will not be affected directly by the section 254 Joint Board proceeding. We also seek comment on whether the ability of states to take universal service support into account differs pending completion of the section 254 Joint Board proceeding or state universal service proceedings pursuant to section 254(f), during any transition period that may be established in the Joint Board proceeding, or thereafter.

146. We recognize that even though, as noted below, the provision of interconnection and unbundled elements pursuant to sections 251 and 252 may not legally displace our interstate access charge regime, the two types of services have clear similarities. Radically different pricing rules for interconnection and unbundled elements, on the one hand, and levels of interstate access charges, on the other, may create economic inefficiencies and other anomalies. Indeed, under a long-term competitive paradigm, it is not clear that there can be a sustainable distinction between access for the provision of local service and access for the provision of long distance service. Thus, we are cognizant of the need to consider these issues in a coordinated manner, and believe it is critically important to reform our interstate access charge rules in the near future.

147. Finally, we note that certain incumbent LECs have advocated that interconnection rates be set based on the ''efficient component pricing rule'' (ECPR) proposed by economist William Baumol and others. Under this approach, an incumbent carrier that sells an essential input service, such as interconnection, to a competing network would set the price of that input service equal to ''the input's direct per-unit incremental costs plus the opportunity cost to the input supplier of the sale of a unit of input.'' Under the ECPR, competitive entry will not place at greater risk the incumbent's recovery of its overhead costs or any profits that it otherwise would forgo due to the entry of the competitor. In other words, the incumbent's profitability would not be diminished by providing interconnection or unbundled elements or both. Proponents of ECPR argue that the ECPR creates an incentive for services to be provided by the lowest-cost provider and that it makes the incumbent indifferent to whether it sells an input service to a competitor or a final service to an end user. Critics, however, have argued that these properties only hold in special circumstances. The ECPR presupposes that the incumbent is the sole provider of a bottleneck service, and seeks to define efficient incentives for incremental entry based on that assumption. Under the ECPR, competitive entry does not drive prices toward competitive levels, because it permits the incumbent carrier to recover its full opportunity costs, including any monopoly profits. In general, the ECPR framework precludes the opportunity to obtain the advantages of a dynamically competitive marketplace. These arguments cast significant doubts on the claims that the rule will yield efficient outcomes over time. Finally, as an administrative matter, it would be difficult for a regulatory agency to determine a carrier's actual opportunity cost.

148. We tentatively conclude that use of the ECPR or equivalent methodologies to set prices for interconnection and unbundled network elements would be inconsistent with the section 252(d)(1) requirement that be based on ''cost.'' We propose that states be precluded from using this methodology to set prices for interconnection and access to unbundled elements. Moreover, we seek comment on whether such a pricing methodology, if used by a state, would constitute a barrier to entry as under section 253 of the 1996 Act.

(4) Rate Structure. 149. The structure of incumbent LEC rates for interconnection and unbundled network elements will influence the incentives for interconnectors to purchase and use these services, independent of the level at which rates are set. For example, a usage-sensitive rate will create incentives for the purchaser to minimize usage, or to seek out end users with low usage, while a flat rate for an element will create incentives to utilize the maximum capacity available. Some possible rate structures for interconnection and access to unbundled network elements under the 1996 Act might produce rates that are not just, reasonable, and nondiscriminatory (as required under Section 251), might conflict with the pricing standard in section 252(d)(1), or might be at odds with the pro-competitive goals of the 1996 Act. Establishing clear federal rules and principles concerning rate structures may assist states and the parties in arbitrating rates for interconnection and unbundled network elements. We therefore seek comment on some possible principles for analyzing rate structure questions, and some possible principles to guide state (and ultimately judicial) decisions in structuring rates for interconnection and unbundled network elements.

150. In general, we believe that costs should be recovered in a manner that reflects the way they are incurred. This approach is consistent with the 1996 Act's pricing standard for interconnection and unbundled network elements, which indicates that prices should be based on cost. Network providers incur costs in providing two broad categories of facilities, dedicated and shared. Dedicated facilities are those that are used by a single party—

either an end user or an interconnecting network. Shared facilities are those that are used by multiple parties. The cost of a dedicated facility can be attributed directly to the party ordering the service that uses that facility, and it is therefore efficient for that party to pay charges that recover the full cost of the facility. A non-traffic sensitive (NTS) or ''flat-rated'' charge is most efficient for dedicated facilities, because it ensures that a customer will pay the full cost of the facility, and no more. It ensures that the customer will, for example, add additional lines only if the customer believes that the benefits of the additional lines will exceed their cost. It also ensures that the customer will not face an additional (and non-cost-based) usage charge.

151. We believe the costs of shared facilities should be recovered in a manner that efficiently apportions costs among users that share the facility. We seek comment on whether a capacity-based NTS rate or a traffic-sensitive (TS) rate may be efficient for recovering the cost of shared facilities in any given circumstance. For shared facilities whose cost varies with capacity, such as network switching, it may be efficient to set prices using any of the following: a usage-sensitive charge; a usage-sensitive charge for peak-time usage and a lower charge for off-peak usage; or a flat charge for the peak capacity that an interconnector wishes to pay for and use as though that portion of the facility were dedicated to the interconnector.

152. We seek comment on whether, pursuant to section 251(c)(2), (3), (6), and 251(d)(1), we should adopt rate structure principles for states to apply in meeting the pricing responsibilities under section 252(d)(1). We also seek comment on how such requirements might further our goal of having clear and administratively simple rules. More specifically, we seek comment on whether we should require states to adopt rate structures that are cost-causative and, in particular, whether we should require states to provide for recovery of dedicated facility costs on a flat-rated basis or, at a minimum, make LECs offer a flat-rate option. In the absence of such a standard, could usage sensitive rates for dedicated facilities cause serious inefficiencies, harm competition, or be contrary to the requirements of the 1996 Act? For example, a usage-based charge could cause parties with high traffic volumes to overpay (*i.e.,* pay more than the fixed cost of the facility), and parties with low traffic volumes to underpay (*i.e.,* pay less than the fixed cost of the facility). In addition, a usage-based charge could give all parties an uneconomic incentive to reduce their traffic volumes or to avoid connecting with networks that impose such charges. It also could give parties with low volumes of traffic, who face below-cost prices, an incentive to add lines that they valued less than their cost. The Washington Utilities Commission, for example, has concluded that measured use interconnection rates are not cost-based and could harm local consumers, and therefore rejected a measured use compensation structure as an exclusive compensation mechanism.

153. We also seek comment on whether we should adopt any rules for pricing of shared facilities. Parties should address the circumstances under which TS rates or flat capacity-based rates would produce efficient results for shared facilities. Several parties have argued that, in the context of interconnection and access to unbundled incumbent LEC networks, interconnectors should have the option of paying for and using a portion of the capacity of incumbent LEC switches. As proposed by some, interconnectors would pay a flat rate for the use of a certain amount of incumbent LEC's switching capacity, and this rate would be discounted based on volume and term commitments. The interconnector would be able to use this platform to provide both basic local switching service as well as vertical switching features—such as caller ID and call forwarding—to its end users without paying the incumbent LEC a separate charge for these services. The interconnector would assume the risk of generating sufficient traffic to justify the capacity it purchased from the incumbent LEC. We seek comment on the ''switch platform'' concept, on whether the 1996 Act requires that switching capacity be made available to new entrants on this basis, and on the competitive implications of such a rate structure. We also seek comment on whether, in the context of these bottleneck facilities offered by incumbent LECs to their competitors, any measures are necessary to prevent incumbent LECs from recovering more than the total cost of a shared facility from users of that facility. Finally, we seek comment on whether concerns about pricing of shared facilities could be alleviated if, as discussed below, sellers of facilities are not allowed to preclude purchasers from further reselling such facilities on a shared basis, which would create alternative sources of shared capacity.

154. Additionally, we seek comment on whether under the 1996 Act we should require or permit volume and term discounts for unbundled elements or services. Commenters are also invited to suggest alternative rate structure principles. Parties should explain how their proposals are consistent with economic cost-causation principles, and with the language and intent of the 1996 Act.

(5) Discrimination. 155. Sections 251 and 252 require that interconnection and unbundled element rates be ''nondiscriminatory.'' In addition, section 251(c)(4) requires that, in making resale available, carriers not impose ''discriminatory conditions or limitations on resale''. Finally, section 252(e) provides that states may reject a negotiated agreement or a portion of the agreement if it ''discriminates'' against a carrier not a party to the agreement and section 252(i) requires incumbent LECs to ''make available any interconnection, service, or network element provided under an agreement * * * to which it is a party to any requesting telecommunications carrier upon the same terms and conditions.'' By comparison, section 202(a) of the 1934 Act provides that ''(i)t shall be unlawful for any common carrier to make any unjust or unreasonable discrimination in charges * * * for * * * like communication service.''

156. We seek comment on the meaning of the term ''nondiscriminatory'' in the 1996 Act compared with the phrase ''unreasonable discrimination'' in the 1934 Act. More specifically, in choosing the word ''nondiscriminatory,'' did Congress intend to prohibit all price discrimination, including measures (such as density zone pricing or volume and term discounts) that are considered lawful under section 202(a)? We note that the legislative history of the new provisions prohibiting discrimination offers no explicit guidance on this question. We seek comment on whether sections 251 and 252 can be interpreted to prohibit only unjust or unreasonable discrimination. For example, may carriers charge different rates to parties that are not similarly situated, such as when a carrier incurs different costs to provide service to such parties? We also seek comment as to whether we should allow such pricing as a policy matter.

(6) Relationship to Existing State Regulation and Agreements. 157. Section 251(d)(3) of the 1996 Act expressly bars the Commission, when prescribing and enforcing regulations to implement section 251, from precluding enforcement of certain existing state regulations. Specifically, section 251(d)(3) prohibits us from ''[precluding] the enforcement of any regulation, order, or policy of a State commission that—

(A) establishes access and interconnection obligations of local exchange carriers;

(B) is consistent with the requirements of this section; and

(C) does not substantially prevent implementation of the requirements of this section and the purposes of [the portion of the 1996 Act dealing with development of competitive markets] .''

We ask parties to address the meaning of the specific terms of section 251(d)(3). What types of state policies would, or would not, be consistent with the requirements of section 251 and the purposes of Part II or Title II of the Act? We also seek comment on how the particular principles discussed above would affect existing state rules and policies, as well as existing negotiated agreements between carriers.

e. Interexchange Services, Commercial Mobile Radio Services, and Non-Competing Neighboring LECs. 158. In this section, we address whether the terms of section 251(c) cover interconnection arrangements between incumbent LECs and providers of interexchange services, CMRS providers, and non-competing neighboring LECs.

(1) Interexchange Services. 159. Sections 251(c)(2) and 251(c)(3) impose duties upon incumbent LECs to provide interconnection and nondiscriminatory access to unbundled network elements, respectively, to ''any requesting telecommunications carrier.'' In relevant part, ''telecommunications carrier'' is defined in section 3(44) of the 1934 Act, as amended, as ''any provider of telecommunications services.'' Because interexchange services are a type of ''telecommunications services,'' which are defined in section 3(46) as ''the offering of telecommunications for a fee directly to the public . . . regardless of the facilities used,'' we conclude that carriers providing interexchange services are ''telecommunications carriers.'' Thus, we believe that interexchange carriers may seek interconnection and unbundled elements under subsections (c)(2) and (c)(3), respectively.

160. With respect to section 251(c)(2), however, we believe the statute imposes limits on the purposes for which any telecommunications carrier, including interexchange carriers, may request interconnection pursuant to that section. Section 251(c)(2) imposes an obligation upon incumbent LECs to provide requesting carriers with interconnection where the request is for the ''transmission and routing of telephone exchange service and exchange access.'' ''Telephone exchange service'' is defined in section 3(47) of the 1934 Act, as amended, as ''service within a telephone exchange, or within a connected system of telephone exchanges within the same exchange area operated to furnish to subscribers intercommunicating service of the character ordinarily furnished by a single exchange,'' or ''comparable service[s].'' According to this definition, interexchange service does not appear to constitute a ''telephone exchange service.'' We seek comment on this interpretation.

161. Interexchange service would not appear to qualify as ''exchange access'' either. ''Exchange access'' is defined in section 3(16) of the 1934 Act, as amended, as ''the offering of access to telephone exchange services or facilities for the purpose of the origination or termination of telephone toll services.'' This definition would appear to require a telecommunications carrier to request interconnection for purposes of ''offering'' access to exchange services. An interexchange carrier that requests interconnection to originate or terminate an interexchange toll call would not appear to be ''offering'' access services, but rather to be ''receiving'' access services. Thus, it would appear that the obligation to provide interconnection pursuant to section 251(c)(2) does not apply to telecommunications carriers requesting such interconnection for the purpose of originating or terminating interexchange traffic. This tentative conclusion seems consistent with section 251(i), which provides that ''[n]othing in this section shall be construed to limit or otherwise affect the Commission's authority under section 201.'' Section 201 is the statutory basis on which interexchange carriers have long been entitled to interconnect for the purposes of originating and terminating interexchange traffic. Some have argued that our interpretation is also consistent with other provisions of section 251, such as section 251(g), and with Congress' focus on the local exchange market. We seek comment on our tentative conclusion.

162. It follows from the above definition of ''exchange access'' that a telecommunications carrier may request cost-based interconnection under section 251(c)(2) for the purpose of offering access services in competition with the incumbent LEC. We seek comment, however, on whether a carrier may request cost-based interconnection under section 251(c)(2) *solely* for this purpose. The language in section 251(c)(2) indicating that interconnecting carriers must offer ''telephone exchange service and exchange access'' may mean that carriers must offer *both* ''telephone exchange service and exchange access,'' or it may mean that telecommunications carriers may obtain interconnection from an incumbent LEC to provide one or the other service, or both. We believe that if we were to interpret this section to require requesting parties to offer both telephone exchange and exchange access services, such a requirement would exclude competitive access providers that currently interconnect with incumbent LECs in order to offer competing exchange access transport services, not telephone exchange service. On the other hand, if we interpret section 251(c)(2) to permit cost-based interconnection for the purpose of offering either telephone exchange or exchange access, that interpretation might permit an interexchange carrier to form an affiliate to obtain interconnection from an incumbent LEC for the purpose of offering a competing exchange access service. The affiliate then might offer its competing service exclusively to its interexchange affiliate, thereby enabling the latter to accomplish indirectly—obtaining interconnection for the purpose of receiving exchange access service—what the statute appears to prohibit it from doing directly under section 251(c)(2). This concern is real, of course, only if an exclusive relationship of this sort is otherwise lawful under the 1934 Act, as amended, which it may not be. We seek comment on this analysis. We also seek comment on the impact that any conclusion here would have on the Commission's *Expanded Interconnection* rules, which address the competitive provision of interstate access.

163. Section 251(c)(3) appears to limit the purposes for which telecommunications carriers may request access to unbundled network elements only in the sense that such carriers must seek to provide a ''telecommunications service'' by means of such elements. As discussed above, interexchange service is a ''telecommunications service.'' Thus, we tentatively conclude that carriers may request unbundled elements for purposes of originating and terminating interexchange toll traffic, in addition to whatever other services the carrier wishes to provide over those facilities.

164. Some interested persons have suggested that this interpretation of section 251(c)(3) would allow interexchange carriers, in effect, to obtain network elements in order to avoid the Commission's Part 69 access charges, but would not require such carriers to use such elements to compete with the incumbent LEC to provide telephone exchange service to

subscribers. In opposition, others may argue that incumbent LECs are not obliged under section 251(c)(3) to provide access to unbundled elements, such as a local loop, *solely* for the purpose of originating and terminating interexchange toll traffic. Rather, the argument might go, the incumbent LEC's statutory obligation to provide network elements extends only to providing exclusive access to an entire loop, in which case an interexchange carrier could not, as a practical matter, purchase such access without having won over the local customer associated with the loop and providing that telephone exchange service to that customer (or arranging for others to provide it). This latter reading of the statute is consistent with our earlier discussion concerning the meaning of the term ''network element.'' There we noted that a network element appears to refer to a facility or function, rather than a jurisdictionally distinct service, such as switching for intrastate exchange access. We also note that viewing a network element as a jurisdictionally distinct service might be inconsistent with the pricing standards set forth in section 252(d)(1), which suggest that prices for these elements should be set on the basis of some measure of economic costs, not jurisdictionally separated costs. Moreover, as with section 251(c)(2), allowing interexchange carriers to circumvent Part 69 access charges by subscribing under section 251(c)(3) to network elements solely for the purpose of obtaining exchange access may be viewed as inconsistent with other provisions in section 251, such as sections 251(i) and 251(g), and contrary to Congress' focus in these sections on promoting local competition. Lastly, such a reading of the statute may effect a fundamental jurisdictional shift by placing interstate access charges under the administration of state commissions. We seek comment on these issues.

165. If a carrier that provides interexchange toll services purchases access to unbundled network elements in order to provide such toll services—either alone if the statute permits it, or in conjunction with local exchange services—we tentatively conclude that the incumbent LEC may not assess Part 69 access charges in addition to the charges assessed for the network elements determined under sections 251 and 252. Section 252, we note, requires that charges for elements shall be based on cost. Thus, the additional imposition of Part 69 access charges would result in total charges not based on cost and thus would seem inconsistent with the statutory scheme. We seek comment on this conclusion. In commenting, parties may want to discuss the relevance of section 272(e)(3). That section requires BOCs, after entering the in-region interexchange business, to impose on their affiliates—or impute to themselves—access charges no lower than what they charge to unaffiliated interexchange carriers. In light of the above discussion and its possible implications for our Part 69 access charge regime, we repeat here our intention of taking up access charge reform in the very near future.

(2) Commercial Mobile Radio Services. 166. We next seek comment on whether interconnection arrangements between incumbent LECs and commercial mobile radio service (CMRS) providers fall within the scope of section 251(c)(2). As indicated below in the discussion of section 251(b)(5), we also seek comment on the separate but related question of whether LEC–CMRS transport and termination arrangements fall within the scope of section 251(b)(5).

167. With respect to section 251(c)(2), because the obligations of that section, and of section 251(c) generally, apply only to incumbent LECs, we tentatively conclude that CMRS providers are not obliged to provide interconnection to requesting telecommunications carriers under the provision of section 251(c)(2). CMRS providers are not encompassed by the 1996 Act's definition of ''incumbent local exchange carrier'' discussed above.

168. LEC–CMRS interconnection arrangements may nonetheless fall within the scope of section 251(c)(2) if CMRS providers are ''requesting telecommunications carrier[s]'' that seek interconnection for the purpose of providing ''telephone exchange service and exchange access.'' CMRS are within the definition of ''telecommunications services'' in section 3(46) of the 1934 Act, as amended, because they are offered ''for a fee directly to the public.'' Similarly, CMRS providers are within the definition of ''telecommunications carrier[s]'' in section 3(44) because they are ''provider[s] of telecommunications services.'' The phrase ''telephone exchange service'' is arguably broad enough to encompass at least some CMRS. ''[T]elephone exchange service'' is defined as either ''(A) service within a telephone exchange, or within a connected system of telephone exchanges within the same exchange area operated to furnish to subscribers intercommunicating service of the character ordinarily furnished by a single exchange, and which is covered by the exchange service charge, or (B) comparable service[s].'' We seek comment on which if any CMRS, including voice-grade services, such as cellular, PCS, and SMR, and non-voice-grade services, such as paging, fit this definition. In commenting, parties should address any past Commission statements that bear on the matter.

169. If CMRS providers seeking interconnection from incumbent LECs fall within the purview of section 251(c)(2), or of section 251(b)(5), there arises the question of the relationship between section 251 and another recent addition to the 1934 Act that also addresses interconnection between CMRS providers and other common carriers, section 332(c). Although we seek comment on the relationship of the two provisions in this proceeding, we note that LEC–CMRS interconnection pursuant to section 332(c) is the subject of its own ongoing proceeding in CC Docket No. 95–185, which the Commission initiated prior to the enactment of the 1996 Act. We also note that we sought comment in that proceeding generally on the issue of the interplay of section 251 and section 332(c) and have received extensive comments. We intend that CC Docket No. 95–185 remain open and we do not want to ask interested parties to repeat their arguments on issues they have already addressed in that docket. Therefore, in this proceeding, we ask parties to address any specific issues presented in this *NPRM* that are not already addressed in CC Docket No. 95–185. In submitting additional comments, parties may want to address the possibility that if both sections 251 and 332(c) apply, the requesting carrier would have to choose the provision under which to proceed. Parties may also want to address whether it would be sound policy for the Commission to distinguish between telecommunications carriers on the basis of the technology they use. The Commission retains the prerogative of incorporating by reference comments filed in the section 332(c) proceeding into the record of this proceeding, and of acting on these pending rulemakings in a manner that best serves the interests of reasoned decisionmaking.

(3) Non-Competing Neighboring LECs. 170. We turn next to whether interconnection agreements between incumbent LECs and non-competing neighboring LECs are subject to section 251(c)(2). If they are, section 252 would appear to require that such arrangements be made public and the terms and conditions of the agreements made available to other carriers. Whether this is true of *existing* arrangements between incumbent LECs

and non-competing neighboring LECs depends on the resolution of the issue, discussed above, of existing agreements generally.

171. The language of section 251(c)(2), which encompasses interconnection requested for the purposes of providing ''telephone exchange service and exchange access,'' appears to encompass the services provided by non-competing neighboring LECs. By definition, such LECs provide ''telephone exchange service and exchange access.'' Nevertheless, a reading of section 251(c)(2) in context shows that it is part of a provision designed to promote competition against the incumbent LEC, and on this basis, the requirements set forth therein could arguably be understood to apply only to arrangements between *competing* carriers. We note, however, that in deciding this issue, we do not seek to create any disincentives that might hamper competition between neighboring carriers. We seek comment on which of the above interpretations is correct. To the extent a party advocates the latter interpretation, we also seek comment on the implications, if any, for the CMRS discussion.

3. Resale Obligations of Incumbent LECs

a. Statutory Language. 172. Section 251(c)(4) imposes a duty upon incumbent LECs to offer certain services for resale at wholesale rates. Specifically, section 251(c)(4) requires incumbent LECs: (A) to offer for resale at wholesale rates any telecommunications service that the carrier provides at retail to subscribers who are not telecommunications carriers; and (B) not to prohibit, and not to impose unreasonable or discriminatory conditions or limitations on, the resale of such telecommunications service, except that a State commission may, consistent with regulations prescribed by the Commission under this section, prohibit a reseller that obtains at wholesale rates a telecommunications service that is available at retail only to a category of subscribers from offering such service to a different category of subscribers.

173. We seek comment generally on the application of this section, as set forth in some detail below. We will first discuss the services subject to resale and conditions on such resale and then turn to the pricing issues concerning resale. We also seek comment generally on the relationship of this section to section 251(b)(1), which imposes certain resale duties on all LECs.

b. Resale Services and Conditions. 174. Section 251(c)(4)(A) provides that incumbent LECs must offer for resale at wholesale rates ''any telecommunications service that the carrier provides at retail to subscribers who are not telecommunications carriers.'' Section 251(b)(1) imposes on all LECs ''the duty not to prohibit, and not to impose unreasonable or discriminatory conditions or limitations on, the resale of its telecommunications services.'' One view of the relationship between section 251(b)(1) and section 251(c)(4) is that all LECs are prohibited from imposing unreasonable restrictions on resale, but that only incumbent LECs that provide retail services to subscribers that are not telecommunications carriers are required to make such services available at wholesale rates to requesting telecommunications carriers. We seek comment on this view.

175. We also seek comment on what limitations, if any, incumbent LECs should be allowed to impose with respect to services offered for resale under section 251(c)(4). Should the incumbent LEC have the burden of proving that a restriction it imposes is reasonable and nondiscriminatory? Given the pro-competitive thrust of the 1996 Act and the belief that restrictions and conditions are likely to be evidence of an exercise of market power, we believe that the range of permissible restrictions should be quite narrow. We seek comment on this view. We also seek comment on whether, and if so how, the resale obligation under section 251(c)(4) extends to incumbent LEC's discounted and promotional offerings. Did Congress intend for such offerings to be provided at wholesale rates, based on the promotional rate minus avoided costs, or does the obligation to provide for resale at wholesale rates only apply to the incumbent LEC's standard retail offerings? If the obligation extends only to the standard offering, what effect would that have on the use of resale as a means of entering the local market? If the obligation applies to promotional and discounted offerings, must the entrant's customer take service pursuant to the same restrictions that apply to the incumbent LECs' retail customers? Moreover, how would such restrictions be enforced without impeding competition (e.g., through disclosure of competitively sensitive information)? We also seek comment on whether a LEC can avoid making a service available at wholesale rates by withdrawing the service from its retail offerings, or whether it should be required to make a showing that withdrawing the offering is in the public interest or that competitors will continue to have an alternative way of providing service. We also seek comment on whether access to unbundled elements addresses this concern.

176. We seek comment on the meaning of the language that ''a State commission may, consistent with regulations prescribed by the Commission under this section, prohibit a reseller that obtains at wholesale rates a telecommunications service that is available at retail only to a category of subscribers from offering such service to a different category of subscribers.'' The provision suggests that Congress did not intend to allow competing telecommunications carriers to purchase a service that, pursuant to state or federal policy, is offered at subsidized prices to a specified category of subscribers (e.g., residential subscribers), and then resell such service to customers that are not eligible for such subsidized service (e.g., business subscribers). For example, it might be reasonable for a state to restrict the resale of a residential exchange service that is limited to low-income consumers, such as the existing Lifeline program. At the same time, we have generally not allowed carriers to prevent other carriers from purchasing high volume, low price offerings to resell to a broad pool of lower volume customers. We seek comment on this analysis.

177. We note that states have adopted various policies regarding resale of telecommunications services. For example, some states prohibit the resale of flat-rated services and residential service. Other states require or permit the resale of residential services, but place restrictions, or permit the LECs to place restrictions, on the resale of such service. For example, Illinois prohibits the resale of residential services to customers other than residential users, while Washington and Ohio permit carriers to prohibit or to place reasonable restrictions on the resale of residential services to business customers. Finally, some states have imposed nondiscrimination requirements similar to those contained in section 251(c)(4). Colorado has enacted rules governing the authorization of local exchange service providers, and has prohibited facilities-based telecommunications providers from imposing unreasonable or discriminatory limitations on the resale of the regulated telecommunications service. Pennsylvania also prohibits a LEC from maintaining or imposing resale or sharing restrictions on any service that the state commission finds to be competitive. We seek comment on whether it would be consistent with the

1996 Act to use any state policies concerning restrictions on resale in our federal policies. We also seek comment on state policies that are inconsistent with the goals of the 1996 Act or that are inadvisable from a policy perspective. Parties are also invited to comment on whether requiring new entrants to cope with resale policies that are inconsistent from one state to another would disadvantage them competitively in a manner inconsistent with the 1996 Act.

c. Pricing of Wholesale Services. (1) Statutory Language. 178. The requirement in section 251(c)(4) that incumbent LECs offer services at ''wholesale rates'' is elaborated in section 252(d)(3), which sets forth the standards that states must use in arbitrating agreements and reviewing rates under BOC statements of generally available terms and conditions. Section 252(d)(3) provides that wholesale rates shall be set ''on the basis of retail rates charged to subscribers for the telecommunications service requested, excluding the portion thereof attributable to any marketing, billing, collection, and other costs that will be avoided by the local exchange carrier.'' As previously discussed in Section II.B.2.d.1., we believe that the Commission is authorized to promulgate rules for the states in applying section 252(d).

(2) Discussion. 179. We seek comment generally about the meaning of the term ''wholesale rates'' in section 251(c)(4). To ensure that incumbent LECs fulfill their duty under section 251(c)(4) regarding resale services, can and should we establish principles for the states to apply in order to determine wholesale prices in an expeditious and consistent manner?

180. We also seek comment on whether we should issue rules for states to apply in determining avoided costs. We could, for example, determine that states are permitted, under the Act, to direct incumbent LECs to quantify their costs for any marketing, billing, collection, and similar activities that are associated with offering retail, but not wholesale services. We seek comment on whether avoided costs should also include a share of general overhead or ''mark-up'' assigned to such costs. LECs would then reduce retail rates by this amount, offset by any portion of those expenses that they incur in the provision of wholesale services. This approach appears to be consistent with the statute, but would create certain administrative difficulties because all of the information regarding such costs is under the control of the incumbent LECs. We seek comment on how this approach could be adopted without creating unnecessary burdens on the LECs.

181. Alternatively, we could establish a uniform set of presumptions that states could adopt and that would apply in the absence of quantifications of such costs by incumbent LECs. For example, the Commission could identify a significant number of expenses that the states would presume to be retail expenses, absent a contrary showing by the incumbent LEC. Such presumptions recognize that it may be difficult to obtain cost data from incumbent LECs. They also appear to be consistent with section 252(b)(4)(B), which provides that, ''[i]f any party refuses or fails unreasonably to respond on a timely basis to any reasonable request from the state Commission, then the State commission may proceed on the basis of the best information available to it from whatever source derived.'' In addition, we could identify specific accounts or portions of accounts in the Commission's Uniform System of Accounts (USOA) that the states should include as ''avoided costs.'' Another issue on which we seek comment is whether states should be permitted or required to allocate some common costs to ''avoided cost'' activities. We seek comment on these options, and invite parties to propose other options. We also seek comment on how any approach would further our goals of clarity and administrative simplicity.

182. We also seek comment on whether we should establish rules that allocate avoided costs across services. Should incumbent LECs be allowed, or required, to vary the percentage wholesale discounts across different services based on the degree the avoided costs relate to those services? For example, if incumbent LECs spend more money marketing vertical features than they spend marketing basic local exchange service, the wholesale rate for vertical features could be reduced by a proportionally greater amount from the retail rate than would be the case for basic local exchange service. The benefit of any such approach is that it is likely to result in wholesale rates which are more cost-based than a uniform allocation across services, and that should facilitate efficient entry. However, the administrative complexity of this approach may outweigh the benefits. We seek comment on this approach and on other options, such as requiring that avoided costs be allocated proportionately across all services so that there would be a uniform discount percentage off of the retail rate of each service.

183. While most states have taken no action in this area, a few states have considered these issues. California recently established interim wholesale rates based on identified costs attributable to retailing functions. Based on the costs, California required Pacific Bell to offer a 17 percent discount below retail business rates and a 10 percent discount below its retail residential rates. It also required GTE to set wholesale rates 12 percent below its retail business rates and 7 percent below its residential rates. In Illinois, Ameritech has filed wholesale tariffs with rates that are approximately 6 percent below undiscounted residential retail rates and 10 percent below undiscounted business retail rates. These tariffs are in effect, but are subject to revision in a tariff proceeding pending before the Illinois Commerce Commission. Illinois commission staff have recommended that wholesale prices be set on the basis of retail rates less a measure of net avoided costs. The measure of avoided costs would include the net total assigned costs (TSLRIC plus an allocation of joint costs) of the avoided functions and a pro rata share of the contribution in existing retail rates. We seek comment on whether any of these approaches by the states are consistent with the fundamental objectives of the 1996 Act, and which, if any, might be useful in setting national policy. We also invite comments discussing the effect of any regulations we adopt on agreements that have already been negotiated or decisions that have already been made by the states.

(3) Relationship to Other Pricing Standards. 184. We seek comment on the relationship between rates for unbundled network elements and rates for wholesale or retail service offerings. Some states have adopted rules requiring that the sum of the rates for unbundled network elements be no greater than the retail service rate. The Illinois Commerce Commission calls this the ''imputation rule.'' Proponents of an imputation rule argue that it prevents anticompetitive price squeezes by incumbent LECs, which may set unbundled element prices too high in order to discourage new entrants from purchasing unbundled elements instead of purchasing and reselling the bundled service. A price squeeze occurs when a vertically-integrated service provider increases the price of the inputs it sells to its non-integrated competitors and/or decreases the price of the products in which it competes with the non-integrated competitors.

185. It may be difficult to comply with an imputation rule, however, if

rates for retail services are below cost, due to implicit, non-competitively neutral, intrastate subsidy flows. For example, assume the cost of basic residential local exchange service is $25, including a $20 cost for the loop element and a $5 cost for the ''port'' element, and the retail rate for such service (including the federal SLC) is $10. In such a case, application of the imputation rule would require either that the incumbent LEC offer unbundled network elements to its competitors at prices less than cost, or that the retail rate be increased to at least $25.

186. Certain states, including the New York Public Service Commission, have not found it necessary to adopt an imputation rule. When the incumbent LEC sells retail services at prices that are less than cost, it may be that it recovers the difference in other state retail service rates and in interexchange access charges. For example, in the example cited above, the customer may pay 12 cents per minute for intrastate toll traffic that costs only 2 cents per minute to provide, and may generate long-distance traffic for which the incumbent LEC receives access charges of 3 cents per minute even though it costs only 1 cent per minute to provide such access. Under these circumstances, it could be argued that no imputation rule is needed to protect new entrants because, as a matter of market economics or legal obligations, new entrants purchasing unbundled elements priced at cost would be providing all of these services, and thus could collect the same relatively over-priced revenues for toll service, interstate access, vertical features, and other offerings to make up for the underpricing of basic residential local exchange service. By contrast, an entrant that merely resells a bundled retail service purchased at wholesale rates, would not receive the access revenues. There are at least two possible additional objections to an imputation rule, when it requires that unbundled elements be priced below cost. First, the unbundled elements could be used to provide services that compete with LEC retail services that are the source of the subsidy. Second, if unbundled elements were priced at less than cost, then efficient facility-based entry would be deterred, as new entrants purchase unbundled network elements at below cost rather than constructing their own facilities. We seek comment on whether it would advance the pro-competitive goals of the 1996 Act for all states to follow an imputation rule, and on the potential pitfalls of such a rule.

187. One action a state could take to address any problems created by adopting an imputation rule when retail rates are below cost would be to restructure its retail rates to eliminate non-competitively-neutral, implicit subsidy flows. This restructure could involve either making subsidy flows explicit and competitively neutral, reducing the level of such flows, or a combination. For example, the Illinois Commerce Commission, before enacting an imputation rule, divided the state into three access areas with separate rates in each area. It then restructured rates, so that retail rates in each access area are, on average, above TSLRIC. Are such changes required pursuant to section 254(f)? Section 254(f) provides that a state ''may adopt regulations not inconsistent with the Commission's rules to preserve and advance universal service'' and ''may adopt regulations to provide for additional definitions and standards to preserve and advance universal service within that State only to the extent that such regulations adopt additional specific, predictable, and sufficient mechanisms to support such definitions or standards that do not rely on or burden Federal universal service support mechanisms.'' We seek comment on the relative advantages and detriments of this and other alternatives as either federal policies or policies that individual states could adopt.

188. We note that, to the extent federal implicit universal service subsidies contribute to any problems created by adopting an imputation rule when retail rates are below cost, they will be addressed in the federal-state joint board review of universal service requirements being conducted pursuant to section 254. We further note that at least one incumbent LEC has suggested in another proceeding that the Commission consider commencing a proceeding to determine whether it would be appropriate to enter a preemption order requiring that rates for local service exceed the cost of providing that service. We seek comment on these issues. We also invite comment on whether some interim rules might be appropriate to address this problem before the federal-state joint board established pursuant to section 254 acts, which could be up to nine months after we issue an order in this proceeding. We also solicit comment on any other rules that should be adopted concerning the relationship between services or elements that are necessary to promote the goals of the Act.

4. Duty to Provide Public Notice of Technical Changes

189. Section 251(c)(5) of the 1996 Act requires incumbent LECs to ''provide reasonable public notice of changes in the information necessary for the transmission and routing of services using that local exchange carrier's facilities or networks, as well as of any other changes that would affect the interoperability of those facilities and networks.'' We tentatively conclude that (1) ''information necessary for transmission and routing'' should be defined as any information in the LEC's possession that affects interconnectors' performance or ability to provide services; (2) ''services'' should include both telecommunications services and information services as defined in sections 3(46) and 3(20), respectively, of the 1934 Act, as amended; and (3) ''interoperability'' should be defined as the ability of two or more facilities, or networks, to be connected, to exchange information, and to use the information that has been exchanged. We request comment on what changes should trigger the public notice requirement and on the above tentative conclusions.

190. We note that public notice is critical to the uniform implementation of network disclosure, particularly for entities operating networks in numerous locations across a variety of states. We tentatively conclude that incumbent LECs should be required to disclose all information relating to network design and technical standards, and information concerning changes to the network that affect interconnection. We further tentatively conclude that the incumbent LEC, at a minimum, must provide the following specific information: (1) date changes are to occur; (2) location at which changes are to occur; (3) type of changes; and (4) potential impact of changes. We believe that these proposed categories represent the minimum information that a potential competitor would need in order to achieve and maintain efficient interconnection.

191. In addition, we request comment on how public notice should be provided. We tentatively conclude that full disclosure of the required technical information should be provided through industry forums (*e.g.*, the Network Operations Forum (NOF) or Interconnection Carrier Compatibility Forum (ICCF)) or in industry publications. This approach would build on a voluntary practice that now exists in the industry and would result in broad availability of the information. We seek comment on this tentative conclusion. We further seek comment as to whether incumbent LECs should be required to file with the Commission a reference to this technical information and where it can be located (*e.g.*, an Internet address).

192. We also tentatively conclude that incumbent LECs should be required to: (1) publicly disclose the information within a ''reasonable'' time in advance of implementation; and (2) make the information available within a ''reasonable'' time if responding to an individual request. We seek comment on what constitutes a reasonable time in each of these situations, and on whether the Commission should adopt a timetable for disclosing technical information comparable to the disclosure timetable that we adopted in the *Computer III* proceeding. In Phase II of that proceeding, the Commission required AT&T and the BOCs to disclose information about network changes or new network services that affect the interconnection of enhanced services with the network at two points in time. First, carriers were required to disclose such information at the ''make/buy'' point—that is, when the carrier decides to make itself, or to procure from an unaffiliated entity, any product the design of which affects or relies on the network interface. Second, carriers were required to release publicly all technical information at least twelve months prior to the introduction of a new service or network change that would affect enhanced service interconnection with the network. If a carrier is able to introduce a new service between six and twelve months of the make/buy point, public disclosure was permitted at the make/buy point, but, in no event, could the carrier introduce the service earlier than six months after the public disclosure. We seek comment as to whether the Commission should adopt a comparable timetable for the Section 251(c)(5) network disclosure requirements and how the timetable should be implemented in this context.

193. We seek comment on the relationship between sections 273 (c)(1) and (c)(4), which detail BOCs' disclosure requirements ''to interconnecting carriers * * * on the planned deployment of telecommunications equipment,'' and section 251(c)(5), which addresses disclosure requirements for all incumbent LECs. In addition, we seek comment on what enforcement mechanism, if any, should be employed to ensure compliance with the section 251(c)(5) public notice requirement and how we might reconcile the related obligations under sections 251(a), 251(c)(5) and 256 to make them simple to administer.

194. We seek comment on the extent to which safeguards may be necessary to ensure that information regarding network security, national security and proprietary interests of LECs, manufacturers and others are not compromised, and what those safeguards should be.

C. Obligations Imposed on ''Local Exchange Carriers'' by Section 251(b)

195. Section 251(b) imposes certain specified obligations on all ''local exchange carriers.'' ''Local exchange carrier'' is defined in section 3(26) as ''any person that is engaged in the provision of telephone exchange service or exchange access.'' Section 3(26) excludes from the definition persons ''engaged in the provision of a commercial mobile service under section 332(c), except to the extent that the Commission finds that such service should be included in the definition of such term.'' We seek comment on whether, and to what extent, CMRS providers should be classified as LECs and the criteria, such as wireless local loop competition in the LEC's service area by the CMRS provider, that we should use to make such a determination. We note that we might have authority under section 332 or other provisions of the Act to impose on CMRS providers obligations comparable to the ones set forth in section 251(b). We seek comment on whether and how a Commission determination that CMRS providers be granted flexibility to provide fixed wireless local loop service should affect the determination of whether CMRS providers should be included in the definition of local exchange carrier. We also seek comment on whether we may classify a CMRS provider as a LEC for certain purposes but not for others. For example, could we treat a CMRS provider as a LEC for purposes of providing resale but not for providing number portability? We also request that commenters discuss whether we may classify some classes of CMRS providers as LECs, but not others, such as those that are not competing with LECs. For example, in considering whether to classify certain CMRS providers as a LECs, should we distinguish between CMRS providers that offer cellular service from those that offer only paging services?

1. Resale

196. Section 251(b)(1) imposes a duty on all LECs ''not to prohibit, and not to impose unreasonable or discriminatory conditions or limitations on, the resale of its telecommunications services.'' New carriers can use resale of other LECs' services to provide service in a geographic area and such resale opportunities facilitate beneficial forms of competition.

197. We seek comment on what types of restrictions on resale of telecommunications services would be ''unreasonable'' under this provision. We believe that few, if any, conditions or limitations should be permitted because such restrictions generally are inconsistent with the pro-competitive thrust of the Act and would likely be evidence of the exercise of market power. We seek comment on this position. We also seek comment on what standards we should adopt, if any, to determine whether a resale restriction should be permitted. Further, we seek comment on whether any restriction on resale should be presumed to be unreasonable absent an affirmative showing that the restriction is reasonable, and if so, how could such a showing be made. Finally, commenters should address whether any of the issues discussed above with respect to resale by incumbent LECs as required under section 251(c)(4) should be applied to other LECs pursuant to section 251(b)(1).

2. Number Portability

198. Section 251(b)(2) imposes a duty on all LECs ''to provide, to the extent technically feasible, number portability in accordance with the requirements prescribed by the Commission.'' This provision reflects Congress' recognition that pro-competitive policies must necessarily address the consumer's preferences and circumstances in the new competitive environment. By requiring that customers be able to switch local service providers without changing their telephone number, Congress seeks to lower barriers to entry and promote competition in the local exchange market. Section 3(30) of the 1996 Act defines number portability as ''the ability of users of telecommunications services to retain, at the same location, existing telecommunications numbers without impairment of quality, reliability, or convenience when switching from one telecommunications carrier to another.'' Section 251(e)(2) of the 1996 Act mandates that the cost of number portability ''be borne by all telecommunications carriers on a competitively neutral basis as determined by the Commission.'' This requirement helps to ensure that no single category of telecommunications carriers will be disadvantaged competitively by bearing all or substantially all of the costs of number portability, and will help enhance fair and efficient local exchange competition.

199. On July 13, 1995, the Commission adopted a Notice of Proposed Rulemaking in CC Docket No. 95–116 seeking comment on a wide

variety of technical and policy issues concerning number portability. *Telephone Number Portability,* CC Docket No. 95–116, 60 FR 39136 (Aug. 1, 1995) (*Number Portability NPRM*). On March 14, 1996, the Common Carrier Bureau issued a Public Notice in that docket seeking comment on how passage of the 1996 Act may affect the issues raised in the *Number Portability NPRM.* Accordingly, in an effort to adopt number portability rules expeditiously, we will address number portability issues raised by the 1996 Act in our ongoing proceeding on number portability. That proceeding will specifically address, *inter alia,* the deployment schedule that incumbent LECs must follow for providing number portability, the manner in which it can be provided, and the recovery of number portability costs.

200. Since our July NPRM, a number of states have taken significant steps to implement service provider number portability. Washington state completed a number portability trial using the Local Area Number Portability (LANP) method in December, 1995, and New York is currently conducting a number portability trial in Manhattan using the Carrier Portability Code (CPC) method. Several states have established task forces with industry participants to investigate the development and implementation of long-term number portability methods. In addition, the State commissions of Illinois, Colorado, New York, and Georgia have adopted the recommendations of their staff and task forces to implement AT&T's Location Routing Number (LRN). Other states, such as Indiana, Michigan, Ohio, and Wisconsin, have selected, or are about to select, LRN without first establishing task forces. Switch vendors have indicated that the software required to support LRN generally will be available in the second quarter of 1997. Consequently, Illinois plans to deploy LRN in the Chicago LATA in the third quarter of 1997, and Georgia has ordered implementation of LRN as soon as it becomes fully available. Ohio plans to have implemented a database number portability method by October, 1997.

201. We note that while several states have taken action toward implementation of service provider portability, no long-term number portability solutions are in use today, and approximately 27 states have yet to address issues related to long-term number portability. By enacting section 251(b)(2) of the 1996 Act, Congress has stated that consumers should be able to change local telephone companies without changing their phone numbers, and that this capability is critical to the development of local exchange competition. Although there are methods of providing number portability today, these mechanisms generally are considered less efficient and less procompetitive than the long-term solutions now being developed. For example, existing methods rely on the incumbent LEC network, generally do not support all current vertical services, and are wasteful of numbering resources. Accordingly, we intend to take expeditious action on number portability issues.

3. Dialing Parity

202. Section 251(b)(3) of the 1996 Act requires LECs ''to provide dialing parity to competing providers of telephone exchange service and telephone toll service.'' Under section 3(15) of the 1934 Act, as amended, ''dialing parity'' means:

> that a person that is not an affiliate of a local exchange carrier is able to provide telecommunications services in such a manner that customers have the ability to route automatically, without the use of any access code, their telecommunications to the telecommunications services provider of the customer's designation from among 2 or more telecommunications services providers (including such local exchange carrier).

This dialing parity requirement will foster local exchange, long distance, and international competition by ensuring that each customer has the freedom to choose among different carriers for different services without the burden of dialing additional access codes or personal identification numbers.

203. It is our understanding that some form of intraLATA toll dialing parity is available or has been ordered in eighteen states. In the thirty-two states where dialing parity has not been required, competition in the intraLATA toll market generally has been permitted only with the use of access codes, which require customers to dial a five- or seven-digit prefix before dialing the called party's telephone number. Under the 1996 Act, LECs are precluded from relying upon access codes as a means of providing dialing parity to competitive telecommunications providers. Thus, when the 1996 Act became law, ''dialing parity'' did not exist in most states and, where some form of dialing parity had been required, implementation requirements and methodologies varied across the states.

204. On April 4, 1994, the Commission adopted a Notice of Proposed Rulemaking that sought comment on a variety of issues related to the administration of the North American Numbering Plan (NANP), including whether to impose dialing parity requirements on LECs for interstate, intraLATA toll traffic. In a subsequent Order, adopted July 13, 1995, the Commission deferred consideration of the dialing parity issue. Administration of the North American Numbering Plan, *Report and Order,* CC Docket No. 92–237, FCC 95–283, 60 FR 38737 (July 28, 1995), para. 7 *(recon. pending).*

205. Comments in response to the *NANP NPRM* as to *whether* LECs should be required to implement dialing parity have become moot in light of the mandatory dialing parity provisions in section 251(b)(3) of the 1996 Act. In addition, because the *NANP NPRM* proposed requiring dialing parity solely for interstate, intraLATA toll traffic, comments received in response to that notice do not address all of the section 251(b)(3) dialing parity requirements that apply to all interstate and intrastate telephone exchange local calling, and telephone toll services. We address the dialing parity issue anew in this NPRM in light of the broader dialing parity directives contained in the 1996 Act. We ask parties to file in this docket those portions of any comments filed in response to the *NANP NPRM* that address particular methodologies for implementing intraLATA toll dialing parity and that are relevant to our consideration of the dialing parity requirements in the 1996 Act.

206. Section 251(b)(3) makes no distinction among international, interstate and intrastate traffic for purposes of the dialing parity provisions. Based on the absence of any such distinctions in defining the scope of the dialing parity requirements, we tentatively conclude that section 251(b)(3) creates a duty to provide dialing parity with respect to all telecommunications services that require dialing to route a call, and encompasses international as well as interstate and intrastate, local and toll services. We believe that this interpretation is consistent with the statutory definition of dialing parity and would open the local and long distance markets to the greatest number of competitive telecommunications services providers. We seek comment on this tentative conclusion.

207. The statutory definition of dialing parity provides that the customer must have the ability to choose ''from among 2 or more telecommunications services providers (including such local exchange carrier).'' LECs are precluded from relying on access codes as a means of providing dialing parity to competitive service providers. The Act, however, does not specify what methods should

be used to implement dialing parity. We believe that presubscription represents the most feasible method of achieving dialing parity in long distance markets consistent with the definition of dialing parity in section 3(15) of the 1996 Act. Although we anticipate that presubscription represents the most feasible method for achieving long distance dialing parity (*see,* e.g., discussion of PIC presubscription methodology below), we note that presubscription does not represent the method by which carriers would accomplish local dialing parity. Rather, the customer's ability to select a telephone exchange service provider and make local telephone calls without dialing extra digits will be accomplished through the unbundling, number portability and interconnection requirements of Section 251. In this context, ''presubscription'' refers to the process by which a customer preselects a carrier, to which all of a particular category or categories of calls on the customer's line will be routed automatically.

208. Presubscription to a carrier other than the customer's local exchange carrier has not been available for *interstate,* intraLATA toll calls nor has it been available in most states for *intrastate,* intraLATA toll calls. Instead, BOCs automatically carry these calls rather than routing them to a presubscribed carrier of the customer's choice. If the state from which the customer is calling has authorized competition, but has not ordered presubscription in the intraLATA toll market, a customer wishing to route an intraLATA call to an alternative carrier typically must dial the carrier access code of the alternative carrier.

209. We seek comment on specific alternative methods for implementing local and toll dialing parity, including various forms of presubscription, in the interstate and intrastate long distance and international markets, that are consistent with the statutory requirements set forth in the 1996 Act. Specifically, we seek information and comment on the standards, if any, that have been developed to address or define local or toll dialing parity, the consistency of those standards with the statutory definition of dialing parity set forth in the 1996 Act, and the extent to which there is a need for the development of further standards.

210. We note that there is substantial variation in the intraLATA toll dialing parity requirements and implementation methodologies that individual states have adopted. For example, some states have adopted a presubscription methodology that allows a customer to choose between the incumbent LEC and any interexchange carrier that is authorized in that state to carry the customer's intrastate, intraLATA toll calls. Other states have adopted a presubscription methodology that allows the customer a choice only between the incumbent LEC and the same interexchange carrier that the customer is currently presubscribed to for interLATA long-distance calling. A ''multi-PIC'' or ''smart-PIC'' presubscription methodology, which would enable customers to presubscribe to multiple carriers for various categories of long-distance calling, also is being considered in some states. We seek comment on whether any of the presubscription methods adopted by the states could be implemented in national dialing parity standards consistent with the requirements of the 1996 Act. We also seek comment as to the categories of long distance traffic (*e.g.,* intrastate, interstate, and international traffic) for which a customer should be entitled to choose presubscribed carriers, and whether a uniform, nationwide methodology is necessary. In the absence of uniform, federal rules, we ask commenters, and state commissions in particular, to address the difficulties state commissions might experience in implementing the dialing parity requirements of the 1996 Act. Finally, we seek comment on what Commission action, if any, is necessary to implement dialing parity for international calls.

211. We tentatively conclude that, pursuant to section 251(b)(3), a LEC is required to permit telephone exchange service customers within a defined local calling area to dial the same number of digits to make a local telephone call, notwithstanding the identity of a customer's or the called party's local telephone service provider. We believe that this interpretation of the dialing parity requirement as applied to the provision of telephone exchange service would best facilitate the introduction of competition in local markets by ensuring that customers of competitive service providers are not required to dial additional access codes or personal identification numbers in order to make local telephone calls. We seek comment on this tentative conclusion and seek information as to how this local dialing parity requirement should be implemented.

212. For most LECs, the 1996 Act provides no timetable for implementing dialing parity. Section 271(e)(2)(A) requires BOCs, however, to provide intraLATA toll dialing parity in a state ''coincident with'' its exercise of authority to provide interLATA services in that state, or three years from the date of enactment of the 1996 Act, whichever is earlier. Section 271(e)(2)(B) limits the ability of states to impose dialing parity requirements on a BOC prior to the earlier of those two dates. We seek comment on what implementation schedule should be adopted for dialing parity obligations for all LECs.

213. The 1996 Act does not require that procedures be established to permit consumers to choose among competitive telecommunications providers (*e.g.,* through balloting). We seek comment as to whether the Commission should require LECs to notify consumers about carrier selection procedures or impose any additional consumer education requirements. Finally, we seek comment on an alternative proposal that would make competitive telecommunications providers responsible for notifying customers about carrier choices and selection procedures through their own marketing efforts.

214. In addition to the duty to provide dialing parity, Section 251(b)(3) also imposes the duty on all LECs to provide competing telecommunications services providers with ''nondiscriminatory access to telephone numbers, operator services, directory assistance, and directory listing, with no unreasonable dialing delays.'' As a general matter, we tentatively conclude that ''nondiscriminatory access'' means the same access that the LEC receives with respect to such services. We seek comment on this tentative conclusion. We also seek comment as to how the Commission should implement the nondiscriminatory access provisions that are contained in section 251(b)(3) as is discussed in more detail below.

215. More specifically, we interpret ''nondiscriminatory access to telephone numbers'' to mean that competing telecommunications providers must be provided access to telephone numbers in the same manner that such numbers are provided to incumbent LECs. Currently, the largest local exchange carrier in each area code serves as the central office (CO) code administrator, the entity that is responsible for the assignment and administration of telephone numbers. In 1995, the Commission ordered that the functions associated with the assignment and administration of local telephone numbers be centralized and transferred from the largest LECs to a newly created NANP Administrator. New section 251(e)(1) directs the Commission to create or designate one or more impartial entities to administer telecommunications numbering and to make such numbers available on an equitable basis. In light of the directives contained in the *NANP Order* and

section 251(e)(1), we seek comment as to what, if any, additional Commission action is necessary or desirable to ensure nondiscriminatory access to telephone numbers consistent with the requirements of section 251(b)(3).

216. We interpret ''nondiscriminatory access to * * * operator services'' by LECs to mean, at least in part, that a telephone service customer, regardless of the identity of his local telephone service provider, must be able to connect to a local operator by dialing ''0'' or ''0'' plus the desired telephone number. For purposes of this provision, we tentatively define ''operator services'' as any automatic or live assistance to a consumer to arrange for billing or completion or both of a telephone call through a method other than: (1) Automatic completion with billing to the telephone from which the call originated, or (2) completion through an access code by the consumer, with billing of an account previously established with the telecommunications service provider by the consumer. This proposed definition is based on the definition of ''operator services'' that is set forth at 47 U.S.C. § 226(a)(7) and, for purposes of this proceeding, has been modified to address the 1996 Act. We seek comment on this proposed definition and on what, if any, Commission action is necessary to implement the nondiscriminatory access requirements for operator services under section 251(b)(3). We ask commenters to address whether the duty imposed on LECs to provide nondiscriminatory access to operator services includes the duty to resell operator services to non-facilities-based competing providers or facilities-based competing providers.

217. We further interpret ''nondiscriminatory access to * * * directory assistance and directory listing'' by LECs to mean that all telecommunications services providers' customers must be able to access each LEC's directory assistance service and obtain a directory listing in the same manner, notwithstanding (1) the identity of a requesting customer's local telephone service provider, or (2) the identity of the telephone service provider for a customer whose directory listing is requested through directory assistance. We seek comment on this interpretation and on what, if any, Commission action is necessary or desirable to implement nondiscriminatory access to directory assistance and directory listing as required by section 251(b)(3). We also seek comment on whether customers of competing telecommunications providers can access directory assistance by dialing 411 or 555–1212, or whether an alternative dialing arrangement is needed in order to make directory assistance databases accessible to all providers. We ask commenters to address whether the duty imposed on LECs to provide nondiscriminatory access to directory assistance includes the duty to resell 411 or local 555–1212 directory assistance services to non-facilities-based competing providers or to facilities-based competing providers.

218. Section 251(b)(3) prohibits ''unreasonable dialing delays.'' We seek comment on the appropriate definition of the term ''dialing delay'' and on appropriate methods for measuring and recording that delay. For example, the term ''dialing delay'' might refer to the period that begins when the caller completes dialing a call and ends when a ringing tone or busy signal is heard on the line. Alternatively, ''dialing delay'' might refer to the period beginning when the caller completes dialing a call and ending when the call is delivered by the incumbent LEC to a competing service provider. Another relevant measure might include the period beginning when a customer goes off hook and ending when a dialtone is heard on the line. We recognize the confusion that has centered around the context-specific use of the terms post-dial delay, access time, call set-up time, and dialtone delay. Accordingly, we ask interested parties to define clearly the time being measured rather than rely upon a definition of a term that may have been used in particular proceedings. Finally, we ask commenters to identify a specific period that would constitute an ''unreasonable'' dialing delay.

219. The 1996 Act does not specify how LECs would recover costs associated with providing dialing parity to competing providers. We seek comment on what, if any, standard should be used for arbitration to determine the dialing parity implementation costs that LECs should be permitted to recover, and how those costs should be recovered.

4. Access to Rights-of-Way

220. Section 251(b)(4) imposes upon LECs the ''duty to afford access to the poles, ducts, conduits, and rights-of-way of such carrier to competing providers of telecommunications services on rates, terms, and conditions that are consistent with section 224.'' Section 224, which predates the enactment of the 1996 Act, states that the Commission ''shall regulate the rates, terms, and conditions for pole attachments to provide that such rates, terms, and conditions are just and reasonable, and shall adopt procedures necessary and appropriate to hear and resolve complaints concerning such rates, terms, and conditions.'' Thus, under section 224, if an entity provided access to poles, ducts, conduits, and rights-of-way, it had to do so on rates, terms, and conditions that were just and reasonable, but there was no specific requirement to provide access to poles, ducts, conduits and rights-of-way. Section 251(b)(4) establishes an additional requirement for LECs to provide access to poles, ducts, conduits, and rights-of-way, consistent with the requirements in section 224. Moreover, amendments to section 224(a)(1) state expressly that LECs are subject to the requirements of section 224. Thus, section 251(a)(4), in conjunction with section 224, requires LECs to provide access to poles, ducts, conduits, and rights-of-way on just and reasonable rates, terms, and conditions. This requirement is vital to the development of local competition, because it ensures that competitive providers can obtain access to facilities necessary to offer service.

221. Section 703 of the 1996 Act added and amended several provisions of section 224 of the 1934 Act. Specifically, section 703 amended sections 224(a)(1), (a)(4), (c)(1) and (c)(2)(B), and added sections 224(a)(5), (d)(3), (e), (f), (g), (h) and (i). We will adopt rules implementing several of these provisions in one or more separate proceedings. In this proceeding, however, we believe that we should address issues raised by new sections 224 (f) and (h), to ensure that we have an opportunity to seek comment and establish any rules necessary to implement section 251(b)(4) within the six month period established by the statute.

222. Section 224(f) provides:

(1) A utility shall provide a cable television system or any telecommunications carrier with nondiscriminatory access to any pole, duct, conduit, or right-of-way owned or controlled by it.

(2) Notwithstanding paragraph (1), a utility providing electric service may deny a cable television system or any telecommunications carrier access to its poles, ducts, conduits, or rights-of-way, on a non-discriminatory basis where there is insufficient capacity and for reasons of safety, reliability and generally applicable engineering purposes.

We seek comment as to the meaning of ''nondiscriminatory access'' with respect to this provision. For example, to what extent must a LEC provide access to poles, ducts, conduits, and rights-of-way on similar terms to all

requesting telecommunications carriers? Must those terms be the same as the carrier applies to itself or an affiliate for similar uses? Are there any legitimate bases for distinguishing conditions of access? We seek comment on specific reasons of safety, reliability, and engineering purposes, if any, upon which access could be denied consistent with sections 224(f)(1) and 251(b)(4).

223. We seek comment on specific standards under section 224(f)(2) for determining when a utility has ''insufficient capacity'' to permit access. Likewise, we seek comment as to the conditions under which access may be denied for ''reasons of safety, reliability and generally applicable engineering purposes.'' For example, should we establish regulations that require a certain minimum or quantifiable threat to reliability before a utility may deny access under section 224(f)(2)? Should we establish regulations that expressly impose on utilities the burden of proving that they are justified in denying access pursuant to section 224(f)(2)? May we, and should we, establish regulations to ensure that a utility fairly and reasonably allocates capacity?

224. Section 224(h) provides that whenever ''the owner of a pole, duct, conduit, or right-of-way intends to modify or alter such pole, duct, conduit, or right-of-way,'' the owner must provide written notification of such action ''to any entity that has obtained an attachment to such conduit or right-of-way so that such entity may have a reasonable opportunity to add to or modify its existing attachment. An entity that adds to or modifies its existing attachment after receiving such notification shall bear a proportionate share of the costs incurred by the owner in making such pole, duct, conduit, or right-of-way accessible.''

225. We seek comment on whether we should establish requirements regarding the manner and timing of the notice that must be given under this provision to ensure that the recipient has a ''reasonable opportunity'' to add to or modify its attachment. In addition, we seek comment on whether to establish rules to determine the ''proportionate share'' of the costs to be borne by each entity, and if so, how such determination should be made. We also seek comment on whether any payment of costs should be offset by the potential increase in revenues to the owner. For example, if the owner of a pole modifies the pole so as to permit additional attachments, for which it can collect additional revenues, should such potential revenues offset the costs borne by the entities that already have access to the pole? We also seek comment on whether we should impose any limitations on an owner's right to modify a facility and then collect a proportionate share of the costs of such modification. For example, should we establish rules that limit owners from making unnecessary or unduly burdensome modifications or specifications?

5. Reciprocal Compensation for Transport and Termination of Traffic

a. Statutory Language. 226. Section 251(b)(5) provides that each LEC has the duty to ''establish reciprocal compensation arrangements for the transport and termination of telecommunications.'' Section 252(d)(2) states that, for the purpose of an incumbent LEC's compliance with section 251(b)(5), a state commission shall not consider the terms and conditions for reciprocal compensation to be just and reasonable unless such terms and conditions both: (1) provide for the ''mutual and reciprocal recovery by each carrier of costs associated with the transport and termination on each carrier's network facilities of calls that originate on the network facilities of the other carrier,'' and (2) ''determine such costs on the basis of a reasonable approximation of the additional costs of terminating such calls.'' That subsection further provides that the foregoing language shall not be construed ''to preclude arrangements that afford the mutual recovery of costs through the offsetting of reciprocal obligations, including arrangements that waive mutual recovery (such as bill-and-keep arrangements),'' or to authorize the Commission or any state to ''engage in any rate regulation proceeding to establish with particularity the additional costs of transporting or terminating calls, or to require carriers to maintain records with respect to the additional costs of such calls.'' The legislative history notes that ''mutual and reciprocal recovery of costs * * * may include a range of compensation schemes, such as in-kind exchange of traffic without cash payment (known as bill-and-keep arrangements).'' The statutory duty to establish reciprocal compensation arrangements for transport and termination furthers the pro-competitive goals of the 1996 Act by ensuring that all LECs receive reasonable compensation for transporting and terminating the traffic of competing local networks with which they are interconnected. It also furthers competition by ensuring that incumbent LECs, in particular, do not charge excessive rates for such transport and termination. As previously discussed in Section II.B.2.d.(1), we believe that the Commission is authorized to promulgate rules to guide the states in applying section 252(d).

b. State Activity. 227. While most states have not addressed pricing for transport and termination of traffic among local competitors, a number of states have taken such actions to foster reciprocal compensation arrangements between incumbent LECs and wireline and wireless competitors. In the states that allow competition for local exchange services, there are at least three different systems in place to allow for reciprocal compensation between competing local networks, although many of these arrangements are interim pending the establishment of permanent rules. Some states have adopted mutual compensation policies with rates for termination of traffic subject to tariff regulation by the state commission. Other states have required bill and keep arrangements, at least on an interim basis, such as, the Washington Utilities and Transportation Commission. We discuss bill and keep arrangements in more detail below, at section II.C.5.f. Third, a number of states have directed incumbent LECs and prospective competing carriers to negotiate arrangements, but have not imposed detailed regulatory requirements with respect to those arrangements.

228. The Pennsylvania Public Utilities Commission has created an interim escrow arrangement to govern mutual compensation for termination of local calls to allow for the start-up of local exchange competition until a permanent rate can be developed. Each party makes an initial payment and then continuing monthly payments into an escrow account. After the Pennsylvania commission determines the appropriate rates for termination of local traffic, the parties will calculate the amounts owed to each party and the escrow funds will be distributed accordingly. This mechanism allows local competition to commence immediately, and gives all parties incentives to conclude the development of a permanent rate, either through negotiation or by the Pennsylvania commission.

229. Illinois, Maryland and New York have established different rates for termination of a competitor's traffic, depending upon whether the traffic is terminated at the incumbent LEC's end office or at a tandem switch. California and Michigan, however, have established only one rate that applies to termination of a competitor's traffic without regard to whether the call is terminated at an end office or at a tandem switch.

c. Definition of Transport and Termination of Telecommunications. 230. We seek comment on whether ''transport and termination of telecommunications'' under section 251(b)(5) is limited to certain types of traffic. The statutory provision appears at least to encompass telecommunications traffic that originates on the network of one LEC and terminates on the network of a competing LEC in the same local service area as well as traffic passing between LECs and CMRS providers. We seek comment on whether it also encompasses telecommunications traffic passing between neighboring LECs that do not compete with one another. While the issues here overlap with those in our discussion, supra, of section 251(c)(2), the text of the two sections are different and thus commenters should note that the issues are not necessarily identical.

231. Because section 252(d)(2) is entitled ''Charges for Transport and Termination of Traffic,'' it could be interpreted to permit separate charges for these two components of reciprocal compensation. As discussed in the section on pricing of interconnection and unbundled network elements, economic theory dictates that dedicated facilities should be priced on a flat-rated basis. We seek comment on whether we should require that states price facilities dedicated to an interconnecting carrier, such as the transport links from one carrier's switch to the meet point with an interconnecting carrier, on a flat-rated basis. We invite comment on other possible interpretations of the statutory distinction between ''transport'' and ''termination'' of traffic.

d. Rate Levels. 232. In considering the pricing policies for transport and termination of traffic, we seek comment on whether the pricing provisions in Section 252(d) should be viewed independently, or whether they should be considered together. This question arises particularly with respect to section 252(d)(1), relating to interconnection and unbundled elements, and section 252(d)(2), relating to the transport and termination of traffic. Because the statute uses different language for interconnection and unbundled elements and transport and termination of traffic, each standard could be interpreted in a different way based on the different language used in each section. This would require that each incumbent LEC offering be identified as falling within one particular category. For example, if a carrier terminates a call to one of its customers using unbundled facilities purchased from an incumbent LEC, the unbundled standard would apply. If a carrier delivers a call to the incumbent LEC for termination to a customer on the incumbent LEC's network, then the termination standard would apply.

233. In certain instances, however, transport and termination under reciprocal compensation may be difficult or impossible to distinguish from unbundled elements. For example, transport between an incumbent LEC's central office and an interconnector's network could be considered either of the foregoing. In such a case, the use of different pricing rules for the different categories may create inconsistencies in the pricing of similar services. This could create economic inefficiencies. We seek comment on whether the statute permits states to use identical pricing rules for each category and, if different rules are used for each, whether it will be possible to distinguish transport and termination from the other categories of service. We also seek comment on whether, if two different pricing rules could apply to a particular situation, we should require that the new entrant be able to choose between them.

234. We seek comment on whether we should establish a generic pricing methodology or impose a ceiling to guide the states in setting the charge for the transport and termination of traffic, and whether any such generic pricing methodology or ceiling should be established using the same principles that might be used to establish any ceiling for interconnection and unbundled elements. We invite parties to suggest any other rules we might establish to assist states. We also seek comment on whether we should mandate a floor for state pricing of reciprocal compensation. The question of whether any floors should be imposed on the charge for transport and termination of traffic is complicated by the additional questions, discussed below, of whether competing LECs should be required to charge symmetrical rates, and to what extent bill and keep arrangements may or should be used. We seek comment on these issues. We also seek comment on the meaning of section 252(d)(2)(B)(ii), which prohibits ''any rate regulation proceeding to establish with particularity the additional costs of transporting or terminating calls'' and any requirement that carriers ''maintain records with respect to the additional costs of such calls.'' We seek comment on whether one or more of the state policies for mutual compensation for transport and termination of traffic could serve as a model for national policies. We also seek comment on state policies that the commenter believes are inconsistent with the goals of the 1996 Act or that are inadvisable from a policy perspective. Parties are also invited to comment on the possible consequences of requiring new entrants to negotiate reciprocal compensation arrangements with incumbents under ground rules that may vary widely from state to state. We also seek comment on whether provisions to maintain existing arrangements are necessary under section 251(d)(3).

e. Symmetry. 235. Symmetrical compensation arrangements are those in which the rate paid by an incumbent LEC to a competitor for transport and termination of traffic is the same as the rate the incumbent LEC charges the competitor for the same service. We note that incumbent LECs are not likely to need to purchase significant amounts of interconnection or unbundled elements from competitors, except for transport and termination of traffic. We therefore consider symmetrical compensation arrangements as a possible additional requirement only for transport and termination of traffic. We seek comment on whether a rate symmetry requirement is consistent with the statutory requirement that rates set by states for transport and termination of traffic be based on ''costs associated with the transport and termination on each carrier's network facilities of calls that originate on the network facilities of the other carrier,'' and ''a reasonable approximation of the additional costs of terminating such calls.''

236. Symmetrical compensation rates based on the incumbent LEC's rate are administratively easier to derive and manage than asymmetrical rates based on the costs of each of the respective networks. Setting asymmetric, cost-based rates might require evaluating the cost structure of nondominant carriers, which would be complex and intrusive. Symmetrical rates also could satisfy the requirement of section 252(d)(2) that costs be determined ''on the basis of a reasonable approximation of the additional costs of terminating such calls,'' by using the incumbent LEC's costs and rates for transport and termination of traffic as a proxy for the costs incurred by new entrants. Moreover, symmetrical rates could reduce an incumbent LEC's ability to use its bargaining strength to negotiate an excessively high termination charge that competitors would pay the incumbent and an excessively low termination rate that the incumbent would pay competitors. Further complicating this issue is that a competitor may possess a degree of market power over the incumbent LEC

that needs to terminate a call on the competitor's network because the decision to place the call lies with the incumbent's customer (who may or may not be aware that the call's intended recipient is on a different network). The competitor, therefore, may have an incentive and the ability to charge high rates to the incumbent for transport and termination of traffic on its network. Finally, symmetrical rates may give carriers a greater incentive to reduce their costs, because the rates they can charge for transport and termination of traffic may not be based directly on their own costs.

237. On the other hand, symmetrical interconnection rates have certain disadvantages. Different networks, even those that use similar technologies, may have different cost characteristics. If interconnection rates were fully cost-based, then instead of setting symmetric rates, one LEC might pay a competitor different interconnection rates for transport and termination than it receives from its competitor. Further, rate symmetry in some circumstances may not resolve existing bargaining power imbalances. For instance, a LEC might be able to use its bargaining power to extract a symmetrical rate higher than relevant costs, or to require that new entrants incur a disproportionate share of the costs of transporting traffic between the two carriers' central offices.

238. In establishing principles to govern state arbitration of rates for transport and termination of traffic, as well as state review of BOC statements of generally available terms and conditions, there are a number of possible options we could follow with regard to rate symmetry. First, we could allow the states to decide whether to require rate symmetry. Second, we could require the states to impose symmetrical rates. Third, we could permit states to allow new entrants to charge termination rates higher than the incumbent LEC in particular circumstances. For example, it might be appropriate to permit a new entrant that offers a premium service with higher costs to charge a higher rate to the LEC of the customer originating the call if the originating LEC can pass on the additional cost to the caller, who could be informed that the call carries an additional charge. We seek comment on these options.

f. Bill and Keep Arrangements. 239. Under bill and keep arrangements, broadly construed, neither of the interconnecting networks charges the other network for terminating the traffic that originated on the other network, and hence the terminating marginal compensation rate on a usage basis is zero. Instead, each network recovers from its own end-users the cost of both originating traffic delivered to the other network and terminating traffic received from the other network. A bill and keep approach does not, however, preclude a positive flat-rated charge for transport of traffic between carriers' networks.

240. As noted earlier, many states have established bill and keep arrangements on an interim basis until a tariffed rate can be established. In other states, such as Maryland, Michigan and New York, bill and keep has not been employed and tariffed rates for the transport and termination of traffic are already in effect. Michigan, however, allows carriers to waive mutual recovery and use bill and keep if traffic from one network to the other is not more than five percent greater than traffic flowing in the opposite direction. In Florida, after negotiations between the incumbent and two new entrants failed, the Florida Public Service Commission determined that, for the termination of local traffic, competing LECs will compensate each other by mutual traffic exchange. Any party that believes that traffic is imbalanced to the point that it is not receiving benefits equivalent to those it is providing through this form of bill and keep arrangement may request that the compensation mechanism be changed. Other states are considering approaches similar to that of Florida. The Texas Public Utilities Commission has proposed a rule that would require competitive LECs to negotiate mutual compensation rates. If negotiations fail, there would be a nine-month bill and keep period to allow the Texas commission time to establish interconnection rates, terms and conditions. The Public Utilities Commission of Ohio staff has proposed using bill and keep on an interim basis for one year. While that proposal is under consideration, Ameritech and Time Warner are using bill and keep in their interim interconnection arrangement until the end of December 1997.

241. Proponents of bill and keep arrangements argue that such arrangements are advantageous in many circumstances. Because no calculation of costs, nor any metering of usage, is necessary under a bill and keep regime, such arrangements may be more quickly established and easily administered. Further, some networks may lack the ability to measure the volume of exchange traffic, and adding that ability would be very costly if done outside of normal network upgrades. Bill and keep arrangements are efficient if the incremental cost to each network of terminating traffic originated on the other network is zero. When the incremental costs of termination for each carrier are near zero (as may be the case for off-peak usage), bill and keep arrangements yield results similar to those of arrangements in which mutual compensation rates are set based on the incremental costs of shared network facilities. Finally, even if incremental termination costs are not zero, bill and keep may impose a small loss in economic efficiency if the demand for calls is inelastic with respect to termination charges. Demand might be inelastic either because termination charges are not passed through to customers, or, as is the case with CMRS, the termination charges are a small part of the cost of service. Bill and keep may be efficient when the efficiency loss is small and the administrative cost of termination charges is large.

242. If at least one carrier has a non-zero incremental termination cost and the elasticity of demand is significant, then bill and keep may create significant efficiency losses by not giving carriers (and their customers) the correct price signals to use network resources efficiently. If there is a positive cost to terminating a call on a competitor's network, but the originating carrier is not charged for sending the call, the originating carrier will have inefficient incentives to compete for customers that initiate large volumes of traffic but receive few calls. Similarly, if there is no charge to the consumer for placing a call that imposes a positive cost on the network of the party called, consumers are likely to initiate an excessive number of calls.

243. As noted earlier, section 252(d)(2)(B)(i) provides that the standards in section 252(d)(2)(A) restricting what may be considered ''just and reasonable'' terms and conditions for reciprocal compensation ''shall not be construed to preclude arrangements that afford the mutual recovery of costs through the offsetting of reciprocal obligations, including arrangements that waive mutual recovery (such as bill and keep arrangements).'' Some parties contend that this section merely authorizes bill and keep arrangements in voluntary negotiated arrangements, but that the Commission and the states are prohibited from imposing bill and keep. The grounds on which a state may reject a negotiated arrangement, however, are limited in Section 252(e)(2) to those that discriminate against a non-party telecommunications carrier or are inconsistent with the public interest, convenience, and necessity. Therefore, the language in

252(d)(2)(B)(i) arguably is not necessary to authorize the states to approve bill and keep in negotiated arrangements, and may be intended to authorize the states to impose bill and keep arrangements in arbitration. We seek comment on whether section 252(d)(2)(B)(i) authorizes states or the Commission to impose bill and keep arrangements. If it does, we also seek comment on whether we must or should limit the circumstances in which states may adopt bill and keep arrangements. For example, one approach would find that section 252(d)(2)(B)(i) allows states to establish bill and keep arrangements only when either of two conditions are met: (1) the transport and termination costs of both carriers are roughly symmetrical and traffic is roughly balanced in each direction during peak periods; or (2) actual transport and termination costs are so low that there is little difference between a cost-based rate and a zero rate (for example, during off-peak periods). When neither of these conditions are met, bill and keep arrangements arguably would not provide for ''the mutual and reciprocal recovery by each carrier of costs associated with the transport and termination on each carrier's network facilities of calls that originate on the network facilities of the other carrier,'' which would violate the requirement of section 252(d)(2)(A)(i). Another possible approach would be to permit or require states to adopt a variant of bill and keep, such as that used by Michigan. In addition, we seek comment on the meaning of the statutory description of bill and keep arrangements as ''arrangements that waive mutual recovery.'' We seek comment on the policies that the states have adopted with respect to bill and keep arrangements. We also seek comment on the historical interconnection arrangements between neighboring incumbent LECs, which, in many cases, used a bill and keep approach with respect to compensation for transport and termination of telecommunications traffic. We also seek comment on whether one or more of these state policies could be incorporated as models for federal policy. We also seek comment on state policies that the commenter believes are inconsistent with the goals of the 1996 Act or that are inadvisable from a policy perspective.

g. Other Possible Standards. 244. There are other ways to establish rate levels or ceilings for reciprocal compensation for transport and termination of traffic, including, *inter alia*, basing them on existing arrangements between neighboring incumbent LECs or measured local service rates (which provides a quick method for determining an appropriate ceiling), or establishing a presumptive uniform per-minute interconnection rate. We solicit comment on whether any of these or other alternatives should be used as the principle for pricing transport and termination of traffic between LECs, and how they would be applied. *See CMRS Notice* at ¶¶ 58–80. We also seek comment on whether it might be desirable to establish an interim rule (such as bill and keep) to apply during a limited initial period while negotiations or arbitration proceedings are ongoing, and a different rule for states to use if called upon to establish long-term arbitrated rates. This could permit new competitors to enter the market more quickly, equalize bargaining power between new entrants and incumbent LECs, and reduce the incumbent's incentive to stall negotiations.

D. Duties Imposed on ''Telecommunications Carriers'' by Section 251(a)

245. We first need to identify the entities that qualify as ''telecommunications carriers'' under section 251. A ''telecommunications carrier'' is defined in section 3(44) as ''any provider of telecommunications services, except that such term does not include aggregators of telecommunications services (as defined in section 226).'' Section 3(44) further provides that ''[a] telecommunications carrier shall be treated as a common carrier under this Act only to the extent that it is engaged in providing telecommunications services, except that the Commission shall determine whether the provision of fixed and mobile satellite service shall be treated as common carriage.''

246. We believe this definition, by itself, generally includes local, interexchange, and international services. We therefore tentatively conclude that, to the extent that a carrier is engaged in providing for a fee local, interexchange, or international basic services, directly to the public or to such classes of users as to be effectively available directly to the public, that carrier falls within the definition of ''telecommunications carrier.'' We seek comment on which carriers are included under this definition, and on whether a provider may qualify as a telecommunications carrier for some purposes but not others. We note that our decision regarding which service providers are deemed ''telecommunications carriers'' may determine whether that provider is obligated to contribute to universal service support mechanisms, in accordance with section 254. *See Universal Service Notice of Proposed Rulemaking*, para. 119 (seeking comment on which service providers are ''telecommunications carriers''). For example, how does the provision of a information service, as defined by section 3(a)(41), in addition to an unrelated telecommunications service, affect the status of a carrier as a ''telecommunications carrier'' for purposes of section 251? We note that under the *Computer III* and *Open Network Architecture* proceedings, the Commission imposed a regulatory structure on the BOCs, GTE, and AT&T for their provision of enhanced services that requires unbundling of basic service features, comparably efficient interconnection, and other nonstructural safeguards. *See, e.g., Computer III Remand Proceedings: Bell Operating Company Safeguards and Tier 1 Local Exchange Company Safeguards*, 57 FR 4373 (Feb. 5, 1992), *BOC Safeguards Order vacated in part and remanded, California* v. *FCC*, 39 F.3d 919 (9th Cir. 1994), *cert. denied*, 115 S. Ct. 1427 (1995) *Filing and Review of Open Network Architecture Plans*, 54 FR 3453 (Jan. 24, 1989), *recon.*, 55 FR 27467 (July 3, 1990); 55 FR 27468 (July 3, 1990) , *California* v. *FCC*, 4 F.3d 1505 (9th Cir. 1993), *recon.*, 58 FR 11195 (Feb. 24, 1993); 57 FR 2842 (Jan. 24, 1992); 6 FCC Rcd 7646 (1991), *pet. for review denied, California* v. *FCC*, 4 F.3d 1505 (9th Cir. 1993).

247. With respect to the regulatory classification of the provision of fixed or mobile satellite service, we already have determined that earth station and space station licensees providing domestic and international fixed-satellite telecommunications services may offer service on a non-common carrier basis, if they choose. We have determined that earth station operators could elect whether to operate as common carriers or private carriers. More recently, we extended this policy to domestic fixed-satellite (domsat) space station licensees. Previously, we required domsat licensees to operate as common carriers unless the licensee applied for, and was granted, authority to sell transponders on a non-common carrier basis. *Domestic Fixed-Satellite Transponder Sales*, 90 F.C.C.2d 1238 (1982), *aff'd sub nom. Wold Communications, Inc.* v. *FCC*, 735 F.2d 1465 (D.C. Cir. 1984). In amending this policy, we noted that no transponder sales request has been opposed in the last decade. We also noted that despite

the routine approval of these sales requests, several operators have chosen to continue to offer space segment capacity on a common carrier basis. This suggests that market forces are sufficient to provide enough common carrier capacity for domestic satellite telecommunications services. We also stated that separate satellite systems providing international fixed-satellite services were established to operate on a non-common carrier basis, and, thus, were never regulated as common carriers. *Separate Satellite Systems*, 101 F.C.C.2d 1046, 1103 (1985). This policy gives fixed-satellite service operators flexibility to meet their customers' changing needs without unnecessary regulatory delay and allows them to remain competitive in the marketplace. With respect to fixed-satellite capacity offered to CMRS providers, we stated that we will examine an array of public interest factors in deciding whether such an offering should be treated as common carriage consistent with section 332(c)(5). *CMRS Second Report and Order*, paras. 106–108. With respect to the mobile-satellite service, we already have determined that we would allow space station licensees operating in certain services to choose whether to offer space segment capacity on a common carrier or non-common carrier basis. *See Amendment of the Commission's Rules to Establish Rules and Policies Pertaining to a Mobile Satellite Service in the 1610–1626.5/2483.5–2500 MHz Frequency Bands*, Report and Order, 59 FR 53294 (Oct. 21, 1994) (*Big LEO Order*). We tentatively conclude that we should continue to determine whether the provision of mobile satellite services is CMRS (and therefore common carriage) or Private Mobile Radio Service based on the factors set forth in the *CMRS Second Report and Order. CMRS Second Report and Order*, para. 108. We also seek comment on whether, and in what respects, this definition of ''telecommunications carrier'' differs from the definition of ''common carrier.''

248. Section 251(a)(1) imposes a duty to ''interconnect directly or indirectly with the facilities and equipment of other telecommunications carriers.'' We seek comment on the meaning of ''directly or indirectly'' in the context of section 251(a)(1), as well as any other issues raised by this subsection. In this context, we ask commenters to address whether section 251(a) is correctly interpreted to allow non-incumbent LECs receiving an interconnection request from another carrier to connect directly or indirectly at its discretion. Section 251(a)(2) of the 1996 Act imposes a duty on each telecommunications carrier ''not to install network features, functions or capabilities that do not comply with the guidelines or standards established pursuant to section 255 or 256.'' We ask commenters to address how this provision should be applied to incumbent and non-incumbent LECs.

249. Section 255 requires the development of guidelines to ensure that telecommunications equipment and customer premises equipment is accessible by persons with disabilities. Section 256 requires the Commission to coordinate ''network planning among telecommunications carriers and other providers of telecommunications services for the efficient interconnection of public telecommunications networks.'' While the specific guidelines or standards to be adopted pursuant to section 255 and 256 will be addressed in one or more separate proceedings, we request comment here on what action, if any, the Commission should take to ensure compliance with the obligations established in section 251(a)(2), which directs telecommunications carriers ''not to install network features, functions, or capabilities that do not comply with the guidelines or standards established pursuant to section 255 or 256.'' What steps, if any, should the Commission take to make carriers aware of the standards adopted pursuant to sections 255 and 256, and of the periodic revisions to these standards? How should the phrase ''network features, functions or capabilities'' be defined, and what is meant by ''installing'' such network features?

E. Number Administration

1. Selection of a Neutral Number Administrator

250. Section 251(e)(1) of the Act requires the Commission to ''create or designate one or more impartial entities to administer telecommunications numbering and to make such numbers available on an equitable basis.'' It further gives the Commission ''exclusive jurisdiction over those portions of the North American Numbering Plan that pertain to the United States,'' but states that ''[n]othing in this paragraph shall preclude the Commission from delegating to state commissions or other entities all or any portion of such jurisdiction.''

251. Additionally, pursuant to the competitive checklist contained in Section 271(c)(2)(B), BOCs desiring to provide in-region interLATA telecommunications services must afford, ''[u]ntil the date by which telecommunications numbering administration guidelines, plans or rules are established, non-discriminatory access to telephone numbers for assignment to the other carrier's telephone exchange service customers * * * [and] [a]fter that date, [must] compl[y] with such guidelines, plan or rules.'' These measures foster competition by ensuring telecommunications numbering resources are administered in a fair, efficient, and orderly manner.

252. The Commission has already taken action to designate an impartial number administrator in its North American Numbering Plan (NANP) decision. *See Administration of the North American Numbering Plan*, CC Docket No. 92–237, Report and Order, FCC 95–283 (released July 13, 1995) (*NANP Order*) (*recon. pending*). The *NANP Order* was initiated in response to Bellcore's stated desire to relinquish its role as NANP administrator. *See* Letter from G. Heilmeier, President and CEO, Bellcore to the Commission (Aug. 19. 1993). Bellcore, however, will continue performing its NANP Administration functions until those functions are transferred to a new NANP administrator pursuant to the *NANP Order*. In the *NANP Order*, the Commission concluded that the functions associated with NANP administration would be transferred to a new administrator of the NANP, unaligned with any particular segment of the telecommunications industry. We tentatively conclude that the *NANP Order* satisfies the requirement of Section 251(e)(1) that the Commission designate an impartial number administrator. We seek comment on this tentative conclusion.

253. Toll free telephone numbers are not administered by the North American Numbering Plan administrator. Database Service Management, Inc. (DSMI), which is a subsidiary of Bellcore, administers toll free numbers. In its proceeding addressing toll free telephone numbers, the Commission sought comment on whether DSMI should continue to administer toll free numbers, or whether the NANP administrator or another neutral entity should administer toll free numbers. *See Toll Free Service Access Codes*, CC Docket 95–155, Notice of Proposed Rulemaking, FCC 95–419 (released Oct. 5, 1995) (*Toll-Free NPRM*), para. 49. We will address the issue of toll free number administration in the Commission's *Toll Free* proceeding.

2. State Role in Numbering Administration

254. Section 251(e)(1) allows the Commission to delegate any portion of its jurisdiction over numbering administration to the states. We tentatively conclude that the Commission should retain its authority to set policy with respect to all facets of numbering administration, including area code relief issues in order to ensure the creation of a nationwide, uniform system of numbering that is essential to the efficient delivery of interstate and international telecommunications services and to the development of the robustly competitive telecommunications services market. Prior to the enactment of the Act state commissions implemented new area codes by adopting area code relief plans, subject to the guidelines enumerated by the Commission in its *Ameritech Order. See Proposed 708 Relief Plan and 630 Numbering Plan Area Code by Ameritech—Illinois,* Declaratory Ruling and Order, 60 FR 19255 (Apr. 17, 1995) (*Ameritech Order*) (*recon. pending*).

255. Area code relief traditionally has come in the form of an area code split, but can also take the form of an area code overlay. In the *Ameritech Order,* the Commission concluded that Ameritech's proposed wireless-only overlay plan would be unreasonably discriminatory and anticompetitive and that administration of numbers: (1) must seek to facilitate entry into the communications marketplace by making numbering resources available on an efficient, timely basis to communications services providers; (2) should not unduly favor or disadvantage any particular industry segment or group of consumers; and (3) should not unduly favor one technology over another.

256. In that decision, the Commission also sought to clarify the authority of the Commission and the states respectively with respect to numbering administration. While the Commission held that it had broad authority over telephone numbering issues, the Commission overturned as *dicta* prior statements it had made suggesting that we retained plenary jurisdiction over numbering issues. The Commission acknowledged that state commissions have legitimate interests in the administration of numbering; it also noted that the state commissions are uniquely positioned to understand, judge and determine how new area codes can best be implemented in view of local circumstances. We believe this continues to be the case. We thus tentatively conclude that the Commission should delegate matters involving the implementation of new area codes, such as the determination of area code boundaries, to the state commissions so long as they act consistently with our numbering administration guidelines. We also tentatively conclude that the *Ameritech Order* should continue to provide guidance to the states regarding how new area codes can be lawfully implemented. We seek comment on these tentative conclusions.

257. Nevertheless, we emphasize that any uncertainty about the Commission's and the states' jurisdiction over numbering administration that may have existed prior to the enactment of the 1996 Act has now been eliminated. Section 251(e)(1) of the Act vests in the Commission exclusive jurisdiction over numbering matters in the United States and authorizes the Commission to delegate some or all of that power to state commissions. As indicated above, we propose leaving to the states decisions related to the implementation of new area codes subject to the guidelines enumerated in the *Ameritech Order.* We are concerned, however, that situations may arise where a state commission in implementing area code relief appears to be acting in violation of those guidelines. We therefore seek comment on whether the Commission should, in light of this concern and the enactment of Section 251(e)(1), reassess the jurisdictional balance between the Commission and the states that was crafted in the *Ameritech Order.* We also seek comment on what action this Commission should take when a state appears to be acting inconsistently with our numbering administration guidelines. In this regard, we note that issues related to area code relief plans often require prompt resolution due to the imminent exhaustion of central office codes in the area code at issue.

258. Prior to enactment of the 1996 Act, Bellcore, as the NANP Administrator, the LECs, as central office code administrators, and the states performed the majority of functions related to the administration of numbers. We tentatively conclude that the Commission should delegate to Bellcore, the LECs and the states the authority to continue performing each of their functions related to the administration of numbers as they existed prior to enactment of the 1996 Act until such functions are transferred to the new NANP administrator pursuant to the *NANP Order.* We seek comment on this tentative conclusion. We also seek comment on whether the Commission should delegate any additional number administration functions to the states or to other entities.

3. Cost Related to Number Administration

259. In Section 251(e)(2) of the 1996 Act, Congress mandates that ''[t]he cost of establishing telecommunications numbering administration arrangements and number portability shall be borne by all telecommunications carriers on a competitively neutral basis as determined by the Commission.'' In the *NANP Order,* the Commission: (1) directed that the costs of the new impartial numbering administrator be recovered through contributions by all communications providers; (2) concluded that the gross revenues of each communications provider will be used to compute each provider's contribution to the new numbering administrator; and (3) concluded that the NANC will address the details concerning recovery of the NANP administrator costs. We find that we need take no further action in this NPRM because the Commission has already determined that cost recovery for numbering administration arrangements must be borne by all telecommunications carriers on a competitively neutral basis.

F. Exemptions, Suspensions, and Modifications

260. Section 251(f)(1)(A) provides that the obligations imposed on incumbent LECs pursuant to section 251(c) ''shall not apply to a rural telephone company until (i) such company has received a bona fide request for interconnection, services, or network elements, and (ii) the State commission determines (under subparagraph (B)) that such request is not unduly economically burdensome, is technically feasible, and is consistent with section 254 (other than subsections (b)(7) and (c)(1)(D) thereof).'' This exemption does not apply with respect to a request under Section 252(c) from a cable company seeking to provide telephone service in an area in which the rural telephone company provides video service, unless the rural telephone company was providing video service as of the date of enactment of the 1996 Act. Section 251(f)(1)(B) sets forth procedures for the State commission to terminate the rural telephone company exemption. Section 251(f)(2) provides that a LEC ''with fewer than 2 percent of the Nation's subscriber lines installed in the aggregate nationwide may petition a State commission for a suspension or modification of the application of a requirement or requirements of subsection (b) or (c) to telephone exchange service facilities

specified in such petition.'' The State must grant the petition to the extent that, and for such duration as, the State commission determines that such suspension or modification is necessary and is consistent with the public interest, convenience and necessity. The state must determine that such modification or suspension is necessary to avoid (1) a significant adverse economic impact on users of telecommunications services generally; (2) imposing a burden that is unduly economically burdensome; or (3) imposing a requirement that is technically infeasible. Section 251(f)(2) provides for relief from the requirements of both Section 251(b) and (c), whereas section 251(f)(1)(A) provides for relief only from the requirements of section 251(c).

261. We seek comment on whether the Commission can and should establish some standards that would assist the States in satisfying their obligations under this section. For example, should the Commission establish standards regarding what would constitute a ''bona fide'' request? We tentatively conclude that the states alone have authority to make determinations under section 271(f).

G. Continued Enforcement of Exchange Access and Interconnection Regulations

262. Section 251(g) provides that each LEC, ''to the extent that it provides wireline services, shall provide exchange access, information access, and exchange services for such access * * * in accordance with the same equal access and nondiscriminatory interconnection restrictions and obligations (including receipt of compensation)'' that applied to such carrier immediately preceding the date of enactment of the 1996 Act, ''until such restrictions and obligations are explicitly superseded by regulations prescribed by the Commission. * * *'' Those obligations and restrictions are enforceable until they are superseded. Section 251(i) states that nothing in Section 251 ''shall be construed to limit or otherwise affect the Commission's authority under section 201.'' We seek comment on any issues that these provisions may create. In particular, we seek comment on any aspect of this NPRM that may affect existing ''equal access and nondiscriminatory interconnection restrictions and obligations (including receipt of compensation).''

H. Advanced Telecommunications Capabilities

263. Finally, we note that pursuant to subsection 706(a) of the 1996 Act the Commission ''shall encourage the deployment on a reasonable and timely basis of advanced telecommunications capability to all Americans (including, in particular, elementary and secondary schools and classrooms) by utilizing, in a manner consistent with the public interest, convenience, and necessity, price cap regulation, regulatory forbearance, measures to promote competition in the local telecommunications market, or other regulating methods that remove barriers to infrastructure investment.'' We sought comment on subsection 706(a) in our section 254 Universal Service NPRM, in our Open Video Systems NPRM, and in our Cable Reform NPRM. Because section 251 and this NPRM comprehensively address ''measures to promote competition in the local telecommunications market,'' we believe it relevant to also seek comment herein on how we can advance Congress' subsection 706(a) goal within the context of our implementation of sections 251 and 252 of the 1996 Act.

III. Provisions of Section 252

A. Arbitration Process

264. Section 252(a) states that, ''[u]pon receiving a request for interconnection, services, or network elements pursuant to section 251, an incumbent local exchange carrier may negotiate and enter into a binding agreement with the requesting telecommunications carrier or carriers without regard to the standards set forth in subsections (b) and (c) of section 251.'' Any party negotiating an agreement under section 252(a) ''may, at any point in the negotiation, ask a State commission to participate in the negotiation and to mediate any differences arising in the course of the negotiation.'' Section 252(b) states that, ''[d]uring the period from the 135th to the 160th day (inclusive) after the date on which an incumbent local exchange carrier receives a request for negotiation under this section, the carrier or any other party to the negotiation may petition the State commission to arbitrate any open issues.'' In addition, under section 252(e), the parties must submit for approval any negotiated or arbitrated agreement to the state commission.

265. Section 252(e)(5) directs the Commission to assume responsibility for any proceeding or matter in which the State commission ''fails to act to carry out its responsibility'' under that section. We note that, unlike section 251(d)(1), there is no specified time within which the Commission must establish regulations pursuant to section 252(e)(5). Thus, we seek comment on whether in this proceeding we should establish regulations necessary and appropriate to carry out our obligations under section 252(e)(5). We also seek comment on what constitutes notice of failure to act, and what procedures, if any, we should establish for interested parties to notify the FCC that a state commission has failed to act.

266. We seek comment on the circumstances under which a state commission should be deemed to have ''fail[ed] to act'' under section 252(e)(5). We note that section 252(e)(4) states that if the State commission does not approve or reject (1) a negotiated agreement within 90 days, or (2) an arbitrated agreement within 30 days, from the time the agreement is submitted by the parties, the agreement shall be ''deemed approved.'' We seek comment on the relationship between this provision and our obligation to assume responsibility under section 252(e)(5). Other questions raised by section 252(e)(5) include: (1) if the Commission assumes the responsibility of the state commission, is the Commission bound by all of the laws and standards that would have applied to the State commission; and (2) is the Commission authorized to determine whether an agreement is consistent with applicable state law as the state commission would have been under section 252(e)(3)? One possible interpretation is that, if an agreement is deemed approved pursuant to section 252(e)(4), it will be deemed to comply with state law, and the Commission will have no authority to review that determination.

267. Once the Commission assumes such responsibility under section 252(e)(5), there is no specific provision by which authority reverts back to the State commission. For example, if the Commission arbitrates an agreement pursuant to section 252(e)(5), the 1996 Act does not provide that the arbitrated agreement is referred back to the state commission for any further purpose. We seek comment on whether, once the Commission assumes responsibility under section 252(e)(5), it retains jurisdiction over that matter or proceeding.

268. We also seek comment on whether we should adopt in this proceeding some standards or methods for arbitrating disputes in the event we must conduct an arbitration under section 252(e)(5). One method we could adopt is ''final offer'' arbitration, whereby each party to the negotiation proposes its best and final offer, and the arbitrator determines which of the two proposals becomes binding. Under final

offer arbitration, each party has incentives to propose an arrangement that the arbitrator could determine to be fair and equitable. In addition, parties are more likely to present terms and conditions that approximate the economically efficient outcome, because proposing extreme terms and conditions may result in an unfavorable finding by the arbitrator. While final offer arbitration is a simple and speedy option, it is possible that the proposals submitted by the parties may not be consistent with the public interest and policies of sections 251 and 252. Alternatively, we could adopt an open-ended arbitration method, which would culminate in a final decision that would be consistent with the public interest and policies of sections 251 and 252. Open-ended arbitration, however, is more administratively difficult and likely to be slower than final offer arbitration.

B. Section 252(i)

269. Section 251 requires that interconnection, unbundled element, and collocation rates be ''nondiscriminatory'' and prohibits the imposition of ''discriminatory conditions'' on the resale of telecommunications services. Section 252(i) appears to be a primary tool of the 1996 Act for preventing discrimination under section 251. Section 252(i) of the 1996 Act provides that a ''local exchange carrier shall make available any interconnection, service, or network element provided under an agreement approved under [section 252] to which it is a party to any other requesting telecommunications carrier upon the same terms and conditions as those provided in the agreement.'' We note that in its March 23, 1995 Report on S. 652, the Senate Committee on Commerce, Science and Transportation discusses an earlier version of section 252(i) and states that the Committee ''intends this requirement to help prevent discrimination among carriers.'' The Senate originally drafted the section entitled ''Availability to Other Telecommunications Carriers,'' which was to become section 252(i), to read: ''A local exchange carrier shall make available any service, facility, or function provided under an interconnection agreement to which it is a party to any other telecommunications carrier that requests such interconnection upon the same terms and conditions as those provided in the agreement.'' *See* S. 652, 104th Cong., 1st Sess. § 251(g) (1995).

270. We seek comment on whether in this proceeding we should adopt standards for resolving disputes under section 252(i) in the event that we must assume the state's responsibilities pursuant to section 252(e)(5). Because the Commission may need to interpret section 252(i) if it assumes the state commission's responsibilities, we seek comment on the meaning of that provision. Must interconnection, services, or network elements provided under a state-approved section 252 agreement be made available to any requesting telecommunications carrier, or would it be consistent with the language and intent of the law to limit this requirement to similarly situated carriers? If the obligation were construed to extend only to similarly situated carriers, how should similarly situated carriers be defined? For example, does the section require that the same rates for interconnection must be offered to all requesting carriers regardless of the cost of serving that carrier, or would it be consistent with the statute to permit different rates if the costs of serving carriers are different? In addition, can section 252(i) be interpreted to allow LECs to make available interconnection, services, or network elements only to requesting carriers serving a comparable class of subscribers or providing the same service (i.e., local, access, or interexchange) as the original party to the agreement? We tentatively conclude that the language of the statute appears to preclude such differential treatment among carriers. We seek comment on this tentative conclusion.

271. We note that negotiated agreements under section 252(a) are the product of compromise between incumbent LECs and requesting carriers, and may therefore contain provisions to which a party agreed as specific consideration for some other provision. We seek comment on whether section 252(i) requires requesting carriers to take service subject to all of the same terms and conditions contained in the entire state-approved agreement. Ameritech suggests that LECs should only be obligated to make available such interconnection, service, or network element provided under a state-approved agreement subject to all applicable terms and conditions contained in the entire agreement. Ameritech ''Proposed Interpretation of Section 252 Pricing Standards'' (submitted with its March 25, 1996, letter to Regina M. Keeney, Chief, Common Carrier Bureau, Federal Communications Commission) at 13–14. Alternatively, does section 252(i) permit the separation of section 251(b) and (c) agreements down to the level of the individual provisions of subsections (b) and (c) and the individual paragraphs of section 251? We recognize that allowing requesting carriers to unbundle too extensively the provisions of a voluntarily negotiated agreement might affect the negotiation process by intensifying the importance each individual term of the agreement. We note that in its March 23, 1995, Report on S. 652 the Senate Committee on Commerce, Science and Transportation stated that it intended the requirement codified in section 252(i) to ''make interconnection more efficient by making available to other carriers the individual elements of agreements that have been previously negotiated,'' and seek comment on its meaning.

272. Section 252(i) requires that incumbent LECs must make available the interconnection, service, or network element provided under the agreement after state approval of the agreement. The statute is silent, however, as to how long such an agreement must be made available. We seek comment on whether the agreement should be made available for an unlimited period, or whether the statute would permit the terms of the agreement to be available for a limited period of time. In particular, we ask commenters to cite any statutory language that would require the resubmission of these pre-existing interconnection agreements to state agencies.

IV. Procedural Issues

A. Ex Parte Presentations

273. This is a non-restricted notice-and-comment rulemaking proceeding. *Ex parte* presentations are permitted, except during the Sunshine Agenda period, provided that they are disclosed as provided in the Commission's rules. *See generally* 47 CFR §§ 1.1202, 1.1203, 1.1206. Written submissions, however, will be limited as discussed below.

B. Regulatory Flexibility Analysis

274. Section 251 of the Communications Act establishes a variety of interconnection obligations. Some of these requirements apply to all telecommunications carriers (which include incumbent LECs, new LEC entrants, and interexchange carriers). Other requirements apply to LECs—both incumbents and new entrants. Section 252 also places certain obligations on state regulatory commissions.

275. We believe that the Regulatory Flexibility Act applies differently to these groups. In particular, we believe that the Regulatory Flexibility Act is inapplicable to this proceeding insofar as it pertains to incumbent LECs. The proposal in this proceeding, however,

may have a significant economic impact on a substantial number of small businesses as defined by section 601(3) of the Regulatory Flexibility Act insofar as they apply to telecommunications carriers other than incumbent LECs.

276. Accordingly, we certify that the Regulatory Flexibility Act of 1980 does not apply to this rulemaking proceeding insofar as it pertains to incumbent LECs and state utility commissions because the relevant proposals, if promulgated, would not have a significant economic impact on a substantial number of small entities, as defined by section 601(3) of the Regulatory Flexibility Act. Incumbent LECs directly subject to the proposed rule amendments do not qualify as small businesses since they are dominant in their field of operation. The Commission will, however, take appropriate steps to ensure that the special circumstances of the smaller incumbent LECs are carefully considered in resolving those issues. To the extent that this NPRM may apply to state utility commissions, they do not qualify as small entities under section 601 of the Regulatory Flexibility Act.

277. Insofar as the proposals in this NPRM apply to telecommunications carriers other than incumbent LECs (generally interexchange carriers and new LEC entrants), they may have a significant economic effect on a substantial number of small entities. Accordingly, we are preparing an Initial Regulatory Flexibility analysis with respect to the provisions applicable to telecommunications carriers other than incumbent LECs. Pursuant to the Regulatory Flexibility Act of 1980, 5 U.S.C. §§ 601–612, the Commission's Initial Regulatory Flexibility Analysis with respect to the Notice of Proposed Rulemaking is as follows:

278. *Reason for Action:* The Commission is issuing this Notice of Proposed Rulemaking to implement the local exchange competition provisions of the 1996 Act discussed above, most importantly section 251.

279. *Objectives:* The objective of the Notice of Proposed Rulemaking is to provide an opportunity for public comment and to provide a record for a Commission decision on the issues addressed in the NPRM.

280. *Legal basis:* The Notice of Proposed Rulemaking is adopted pursuant to Sections 1, 4, 201–205, 222, 224, 225, 251, 252, 253, 254, 255, 256, 271, and 273 of the Communications Act of 1934, as amended, 47 U.S.C. §§ 153, 154, 201–205, 222, 224, 251, 252, 253, 254, 255, 256, 271, and 273.

281. *Description of small entities affected:* Certain of the proposals in this NPRM would apply to telecommunications carriers, other than incumbent LECs. These carriers would include small interexchange carriers and small, new LEC entrants. Some of these carriers clearly qualify as small business entities.

282. *Potential Impact:* Some of the proposals in this NPRM may impose requirements that will have a significant economic effect on certain small business entities. After evaluating the comments in this proceeding, the Commission will further examine the impact of any rule changes on small entities and set forth findings in the Final Regulatory Flexibility Analysis.

283. *Reporting, recordkeeping and other compliance requirement:* The proposed rules, adopted pursuant to the Telecommunications Act of 1996, would require dominant incumbent local exchange carriers, in certain cases, to submit documentation requested by state commissions for arbitration concerning the rates, terms, and conditions for interconnection and network element unbundling.

284. *Federal rules that may overlap, duplicate or conflict with the Commission's proposal:* Our existing Expanded Interconnection rules may overlap with the requirements of section 251 addressed in this NPRM. We have also sought comment on the relationship between our Part 69 Access Charge rules and the requirements of sections 251 and 252 of the 1996 Act.

285. *Any significant alternatives minimizing impact on small entities and consistent with stated objectives:* The Notice of Proposed Rulemaking solicits comments on alternatives.

286. *Comments are solicited:* Written comments are requested on this Initial Regulatory Flexibility Analysis. These comments must be filed in accordance with the same filing deadlines set for comments on the other issues in this Notice of Proposed Rulemaking but they must have a separate and distinct heading designating them as responses to the Regulatory Flexibility Analysis.

287. The Secretary shall send a copy of this *Notice of Proposed Rulemaking,* including the certification set out above, to the Chief Counsel for Advocacy of the Small Business Administration in accordance with Section 603(a) of the Regulatory Flexibility Act, Pub. L. No. 96–354, 94 Stat. 1164, 5 U.S.C. § 601, *et. seq.* (1981).

C. Initial Paperwork Reduction Act of 1995 Analysis

288. This NPRM contains either a proposed or modified information collection. As part of its continuing effort to reduce paperwork burdens, we invite the general public and the Office of Management and Budget (OMB) to take this opportunity to comment on the information collections contained in this NPRM, as required by the Paperwork Reduction Act of 1995, Pub. L. No. 104–13. Public and agency comments are due at the same time as other comments on this NPRM; OMB comments are due June 24, 1996. Comments should address: (a) whether the proposed collection of information is necessary for the proper performance of the functions of the Commission, including whether the information shall have practical utility; (b) the accuracy of the Commission's burden estimates; (c) ways to enhance the quality, utility, and clarity of the information collected; and (d) ways to minimize the burden of collection of information on the respondents, including the use of automated collection techniques or other forms of information technology.

D. Comment Filing Procedures

289. *General.* Pursuant to applicable procedures set forth in Sections 1.415 and 1.419 of the Commission's rules, 47 CFR §§ 1.415, 1.419, interested parties may file comments on or before May 16, 1996, and reply comments on or before May 30, 1996. To file formally in this proceeding, you must file an original and twelve copies of all comments, reply comments, and supporting comments. If you want each Commissioner to receive a personal copy of your comments, you must file an original and 16 copies. Comments and reply comments should be sent to Office of the Secretary, Federal Communications Commission, 1919 M Street, N.W., Room 222, Washington, D.C. 20554, with a copy to Janice Myles of the Common Carrier Bureau, 1919 M Street, N.W., Room 544, Washington, D.C. 20554. Parties should also file one copy of any documents filed in this docket with the Commission's copy contractor, International Transcription Services, Inc., 2100 M Street, N.W., Suite 140, Washington, D.C. 20037. Comments and reply comments will be available for public inspection during regular business hours in the FCC Reference Center, 1919 M Street, N.W., Room 239, Washington, D.C. 20554.

290. *Separate Comment Filing Procedures for Dialing Parity, Number Administration, Public Notice of Technical Changes, and Access to Rights of Way.* Interested parties are instructed to file separate comments with respect to (1) dialing parity, (2) access to rights-of-way, (3) number administration, and (4) public notice of technical changes requirements and regulatory changes proposed or discussed above. Comments on these

issues are to be filed on or before May 20, 1996; and reply comments on, or before, June 3, 1996. These filings will not be considered in applying the page limits for filings in this proceeding. To file formal comments addressing these issues, parties are required to comply with all of the remaining comment filing procedures contained in part VI(D) of this NPRM. Comments and reply comments should be sent to the Office of the Secretary, Federal Communications Commission, 1919 M Street, N.W., Room 222, Washington, D.C. 20554, with 3 copies to Gloria Shambley of the Network Services Division, Common Carrier Bureau, 2000 M Street, N.W., Suite 210, Washington, D.C. 20554.

291. *Other requirements.* In order to facilitate review of comments and reply comments, both by parties and by Commission staff, we require that comments be no longer than seventy-five (75) pages and reply comments be no longer than thirty-five (35) pages, including exhibits, appendices, and affidavits of expert witnesses. Empirical economic studies and copies of relevant state orders will not be counted against these page limits. These page limits will not be waived and will be strictly enforced. Comments and reply comments must include a short and concise summary of the substantive arguments raised in the pleading. Comments and reply comments must also comply with Section 1.49 and all other applicable sections of the Commissions Rules. However, we require here that a summary be included with all comments and reply comments, although a summary that does not exceed three pages will not count towards the 75 page limit for comments or the 35 page limit for reply comments. The summary may be paginated separately from the rest of the pleading (*e.g.*, as ''i, ii''). *See* 47 CFR § 1.49. We also direct all interested parties to include the name of the filing party and the date of the filing on each page of their comments and reply comments. Comments and reply comments also must clearly identify the specific portion of this Notice of Proposed Rulemaking to which a particular comment or set of comments is responsive. If a portion of a party's comments does not fall under a particular topic listed in the outline of this NPRM, such comments must be included in a clearly labelled section at the beginning or end of the filing. Parties may not file more than a total of ten (10) pages of *ex parte* submissions, excluding cover letters. This 10 page limit does not include: (1) written *ex parte* filings made solely to disclose an oral *ex parte* contact; (2) written material submitted at the time of an oral presentation to Commission staff that provides a brief outline of the presentation; or (3) written material filed in response to direct requests from Commission staff. *Ex parte* filings in excess of this limit will not be considered as part of the record in this proceeding.

292. Parties are also asked to submit comments and reply comments on diskette. Such diskette submissions would be in addition to and not a substitute for the formal filing requirements addressed above. Parties submitting diskettes should submit them to Janice Myles of the Common Carrier Bureau, 1919 M Street, N.W., Room 544, Washington, D.C. 20554. Such a submission should be on a 3.5 inch diskette formatted in an IBM compatible form using MS DOS 5.0 and WordPerfect 5.1 software. The diskette should be submitted in ''read only'' mode. The diskette should be clearly labelled with the party's name, proceeding, type of pleading (comment or reply comments) and date of submission. The diskette should be accompanied by a cover letter.

293. Written comments by the public on the proposed and/or modified information collections are due 25 days after public release of this NPRM, and reply comments must be submitted not later than 14 days after the comments. Written comments must be submitted by the Office of Management and Budget (OMB) on the proposed and/or modified information collections on or before 60 days after date of publication in the Federal Register. In addition to filing comments with the Secretary, a copy of any comments on the information collections contained herein should be submitted to Dorothy Conway, Federal Communications Commission, Room 234, 1919 M Street, N.W., Washington, D.C. 20554, or via the Internet to dconway@fcc.gov and to Timothy Fain, OMB Desk Officer, 10236 NEOB, 725 17th Street, N.W., Washington, D.C. 20503 or via the Internet to fain____t@al.eop.gov.

E. Ordering Clauses

294. Accordingly, It is Ordered that pursuant to Sections 1, 4, 201–205, 222, 224, 225, 251, 252, 254, 255, 256, and 271 of the Communications Act of 1934, as amended, 47 U.S.C. §§ 153, 154, 201–205, 222, 224, 251, 252, 254, 255, 256, and 271, a Notice of proposed rulemaking is hereby adopted.

295. It is further ordered that, the Secretary shall send a copy of this notice of proposed rulemaking, including the regulatory flexibility certification, to the Chief Counsel for Advocacy of the Small Business Administration, in accordance with paragraph 603(a) of the Regulatory Flexibility Act, 5 U.S.C. §§ 601 *et seq.* (1981).

296. *The Administration of the North American Numbering Plan,* Notice of Proposed Rulemaking, CC Docket No. 92–237, 59 FR 24103 (5/10/94), to the extent that it addressed the issue of dialing parity, is hereby dismissed as moot solely with respect to that issue.

Federal Communications Commission.

William F. Caton,

Acting Secretary.

[FR Doc. 96–10300 Filed 4–24–96; 8:45 am]

BILLING CODE 6712–01–P

---

47 CFR Part 2

[DA 96–577]

Mobile-Satellite Service

AGENCY: Federal Communications Commission.

ACTION: Proposed rule.

SUMMARY: The Commission seeks additional comments in its proposal to allocate 70 megahertz at 1990–2025 MHz and 2165–2200 MHz to the Mobile-Satellite Service. Comments will help to resolve outstanding questions relative to spectrum sharing and relocation of incumbent microwave licensees.

DATES: Comments are due on or before May 17, 1996.

ADDRESSES: Federal Communications Commission, 1919 M Street, NW., 20554.

FOR FURTHER INFORMATION CONTACT: Sean White, Office of Engineering and Technology, 202/418–2453, e-mail swhite@fcc,gov.

SUPPLEMENTARY INFORMATION:

On January 31, 1995, the Commission released a Notice of Proposed Rule Making (NPRM) in the Matter of Amendment of Section 2.106 of the Commission's Rules to Allocate Spectrum at 2 GHz for Use by the Mobile-Satellite Service, ET Docket No. 95–18, 60 Fed. Reg. 11644. The comment and reply comment period for this proceeding closed on June 21, 1995.

On March 14, 1996, COMSAT Corporation (COMSAT) filed supplemental comments in this proceeding and requested that we allow interested parties to file comments addressing them. On March 27, 1996, Motorola, Inc., filed a partial opposition to COMSAT's supplemental comments,

stating that the Commission should not consider COMSAT's supplemental comments unless all parties are given time to analyze and respond to them. On April 1, 1996, UTC filed an opposition to COMSAT's supplemental comments, asking that the Commission treat them as an ex parte communication. On April 5, 1996, the American Petroleum Institute filed a response to COMSAT's supplemental comments.

COMSAT's supplemental comments, and the responses thereto, were filed partly as a result of new information provided by the 1995 World Radio Conference on the issues in this proceeding. The responses of other interested parties demonstrates that there is considerable interest in these issues. At the same time, we do not wish to delay this proceeding unduly. Therefore, we will allow interested parties to file responses to COMSAT's supplemental comments within 30 days of the date of this Public Notice. Responses should be sent to Office of the Secretary, Federal Communications Commission, Washington, D.C. 20554. COMSAT's supplemental comments and the responses thereto will be available for public inspection during regular business hours in the FCC Reference Center (Room 239) of the Federal Communications Commission, 1919 M. Street, N.W., Washington, D.C. 20554.

For further information concerning this proceeding contact Sean White at (202) 418–2453 or e-mail swhite@fcc.gov, Office of Engineering and Technology, Federal Communications Commission, Washington, D.C. 20554.

Federal Communications Commission.

Michael J. Marcus,

Acting Chief, Office of Engineering and Technology.

[FR Doc. 96–9748 Filed 4–24–96; 8:45 am]

BILLING CODE 6712–01–P

DEPARTMENT OF TRANSPORTATION

Federal Highway Administration

49 CFR Part 383

[FHWA Docket No. MC–93–12]

RIN 2125–AD05

Training of Entry-Level Drivers of Commercial Motor Vehicles

AGENCY: Federal Highway Administration, DOT.

ACTION: Notice of availability and request for comments.

SUMMARY: Section 4007 of the Intermodal Surface Transportation Efficiency Act of 1991 (ISTEA), (Pub.L. 102–240, 105 Stat. 2151–2152) directed the Secretary of Transportation to report to Congress on the effectiveness of the efforts of the private sector to ensure adequate training of entry-level drivers of commercial motor vehicles (CMVs). With this notice, the Federal Highway Administration (FHWA) is advising members of the general public that copies of the study entitled ''Assessing the Adequacy of Commercial Motor Vehicle Driver Training: Final Report'' and a cost-benefit analysis of requiring entry-level training for CMV drivers are now available from the National Technical Information Service (NTIS). Two copies have also been placed in the FHWA Docket number MC–93–12. The Agency is also requesting comments from the general public regarding the content and conclusions of the final report and cost-benefit analysis.

DATES: Comments must be submitted on or before October 22, 1996.

ADDRESSES: Submit written, signed comments to FHWA Docket No. MC–93–12, Room 4232, HCC–10, Office of Chief Counsel, Federal Highway Administration, 400 Seventh Street, SW., Washington, D.C. 20590. All comments received will be available for examination at the above address from 8:30 a.m. to 3:30 p.m., e.t., Monday through Friday, except Federal holidays. Those desiring notification of receipt of comments must include a self-addressed, stamped postcard.

FOR FURTHER INFORMATION CONTACT: Mr. Ronald Finn, Office of Motor Carrier Research and Standards, (202) 366–0647, or Mr. Charles Medalen, Office of Chief Counsel, (202) 366–1354, Federal Highway Administration, 400 Seventh Street, SW., Washington, D.C. 20590. Office hours are from 7:45 a.m. to 4:15 p.m., e.t., Monday through Friday, except Federal holidays.

SUPPLEMENTARY INFORMATION:

Advance Notice of Proposed Rulemaking

In response to the requirement in § 4007 of the ISTEA that the Secretary commence a rulemaking proceeding on the need to require training of all entry-level drivers of CMVs, the FHWA published an advance notice of proposed rulemaking (ANPRM) on entry-level training on June 21, 1993 (58 FR 33874). There were 104 comments to the ANPRM, but no consensus was reached on the issue of mandated entry-level driver training. The heavy truck and bus industries were against mandated entry-level driver training. The main objection of these industries to the proposed training requirement was that the existence of uniform licensing standards rendered training unnecessary. The International Brotherhood of Teamsters and the trucking schools were in favor of the training requirement. The trucking schools argued that if training was not mandated, the motor carriers and schools generally would not offer or require training.

Adequacy Study

In order to formulate a basis for the report to Congress on entry-level driver training required by the ISTEA, the FHWA hired a contractor to assess the adequacy of entry-level training for CMV drivers. In analyzing the adequacy of entry-level training, the contractor examined the training provided to entry-level drivers of heavy trucks, motorcoaches, and school buses. This examination disclosed that the percentages of employers who hire entry-level drivers and provide them with adequate training were as follows: school bus operator employers (24 percent), motorcoach driver employers (19 percent), and heavy truck driver employers (8 percent).

Consequently, the contractor concluded that neither the heavy truck, motorcoach, nor school bus segments of the CMV industry provided adequate entry-level driver training.

Cost-Benefit Study

The FHWA also had the contractor carry out a cost-benefit study of requiring entry-level driver training.

This study showed that the cost of mandating entry-level training for 360,000 drivers a year in the heavy truck industry would be $4.5 billion over a 10-year period. The societal benefits of fewer accidents, reduced health care costs, and reduced delays caused by accident-related traffic congestion over the same 10-year period were estimated to range from $5.8 to $15.3 billion.

Report to Congress

The Secretary of Transportation submitted the ''Assessing the Adequacy of Commercial Motor Vehicle Driver Training: Final Report'' and the cost-benefit analysis to the U.S. Congress on February 5, 1996.

The FHWA is requesting comments from the general public on the entry-level training final report and cost-benefit analysis prior to taking any additional action. The FHWA is considering holding a public meeting at the close of the comment period on the issue of mandating entry-level training.

If the FHWA decides to hold such a meeting, a separate notice will be published in the Federal Register.

Availability of the Report

Copies of the study entitled ''Assessing the Adequacy of Commercial Motor Vehicle Driver Training: Final Report'' and the cost-benefit analysis of requiring entry-level training for CMV drivers are available from the NTIS, U.S. Department of Commerce, 5285 Port Royal Road, Springfield, Virginia 22161. The telephone number for placing an order from NTIS is 703–487–4650. The report number is PB 96–141536. The domestic price per copy is $61.00 while the foreign price is $122.00 per copy. Checks or money orders should be made payable to ''NTIS.'' American Express, VISA, MasterCard, or NTIS deposit account are also accepted. The final report, consisting of an Executive Summary; Technical Overview; and Findings, Conclusions, and Recommendations totals over 550 pages. The Executive Summary of ''Assessing the Adequacy of Commercial Motor Vehicle Driver Training: Final Report'' is reproduced as Appendix A to this notice. Two copies of ''Assessing the Adequacy of Commercial Motor Vehicle Driver Training: Final Report'' and the cost-benefit analysis of requiring entry-level training for CMV drivers have been placed in FHWA Docket MC–93–12 and are available for public inspection as noted in the ''Addresses'' section above.

Members of the motor carrier industry and other interested parties may access a Word Perfect 5.1 version of the report and the cost-benefit study, through the FHWA's Electronic Bulletin Board System (FEBBS) using a personal computer and a modem. The FEBBS allows read-only access to information. Access numbers for FEBBS are (202) 366–3764 for the Washington, D.C. area, or toll-free at (800) 337–3492. The system supports a variety of modem speeds up to 14,400 baud line speeds, and a variety of terminal types and protocols. Modems should be set to 8 data bits, full duplex, and no parity for optimal performance. Once a connection has been established, new users will have to go through a registration process. Instructions are given on the screen. FEBBS is mostly menu-driven and hot keys are indicated by <> enclosing the hot key. After logging on to FEBBS and arriving at the MAIN MENU, select <C> for Conference: then <M> for Motor Carrier; then either <M> for McRegis or <I> for Information (more detailed help).

For technical assistance to gain access to FEBBS, contact: FHWA Computer Help Desk, HMS–40, room 4401, 400 Seventh Street, SW., Washington, D.C. 20590. The telephone number is (202) 366–1120.

Authority: 23 U.S.C. 315; 49 CFR 1.48; Sec. 4007 of Pub. L. 102–240, 105 Stat, 1914, 2151.

Issued on: April 18, 1996.

Rodney E. Slater,

Federal Highway Administration.

Executive Summary

This document is Volume I of a three volume, final report of a project titled, ''Assessing the Adequacy of Entry-Level Commercial Motor Vehicle Training in the Private Sector.'' In this volume, we summarize the background, methodology, findings, conclusions and recommendations of the study. Volume II provides a more extensive technical overview of each of these topics. Volume III contains detailed discussion of these topics, plus appendices containing a summary of the literature review and an explanation of training adequacy scoring.

Background

The Intermodal Surface Transportation Efficiency Act of 1991 (ISTEA), Public Law 102–240 mandates that the FHWA report to Congress on the effectiveness of private sector efforts to ensure adequate training of entry-level drivers of commercial motor vehicles (CMVs). The act directed the FHWA to initiate a rulemaking on the need to require training of all entry-level drivers of CMVs. If, as the result of the rulemaking proceedings, the FHWA determines that it is not in the public interest to require training of all entry-level CMV drivers, the FHWA must submit a report to Congress explaining the reasons for this decision, including a cost-benefit analysis.

To satisfy this mandate from Congress, FHWA needed to collect information that would permit them to determine the adequacy of private sector training efforts. This project was initiated to support FHWA in collecting, compiling and analyzing this information.

Objectives

The principal objective of the project was to satisfy the congressional mandate. In the words of the ISTEA, this meant that the principal objective was to determine ''the effectiveness of private sector efforts to ensure adequate training of entry-level drivers of commercial motor vehicles.'' ''Commercial Motor Vehicles'' for the purposes of this study included heavy trucks, motorcoaches and school buses. Each of these CMV types represented a separate private sector. In addition to determining the adequacy of training, FHWA must go further and determine whether or not it is in the public interest to require training of all entry-level CMV drivers. So, an important secondary objective of the study was to support FHWA in its decision-making process.

Conclusions and Recommendations

This section presents the conclusions and recommendations of the study. The first subsection below addresses the conclusions related to the training adequacy issue. The next subsection presents conclusions related to the various factors that could affect FHWA's decision making process. Finally, recommendations are presented for future actions. Data and discussion to support the conclusions and recommendations occur in later sections.

Are the Private Sectors Effective at Ensuring Adequate Training?

Are the three private sectors—heavy trucks, motorcoaches and school buses—effective at ensuring adequate training for their entry-level drivers? The conclusion of this study is that none of the three private sectors are effectively providing adequate training. What evidence exists that the training is inadequate? The data comes from both the motor carriers and the drivers surveyed in this study.

Table 1 presents data for the motor carriers. The first row of the table shows the percent of motor carriers hiring entry-level drivers that provide formal training for them. The percentages are calculated from data in Volume III, Tables 3.3, 4,3 and 5.2. For example, Table 3.3 shows that 24 of the 111 heavy truck carriers who hire entry-level drivers provide formal training. This calculates to 21.6 percent, as shown in Table 1. The second row in Table 1 shows the percent of motor carriers whose formal training was judged as ''Adequate.'' For motorcoaches and school buses, the percentages comes directly from Volume III, Tables 4.5 and 5.4. For heavy trucks, the percentage is derived from Table 3.5 by combining the Number Adequate values for For-hire and Private Fleets (i.e., nine of the 24 company programs were adequate). The third row in Table 1 provides an estimate of the percent of motor carriers hiring entry-level drivers that provide adequate training for them. This figure is obtained by combining the data in the first two rows. For example, if 21.6 percent of the heavy truck carriers hire entry-level drivers and provide formal training for them, but only 37.5 percent of the carriers had adequate formal

training, then multiplying 21.6 by .375 gives 8.1 as the estimate of the percent of heavy truck carriers that provide adequate formal training.

''Effectiveness'' was defined as the prevalence or frequency with which the motor carriers in each domain provided formal training for their entry-level drivers. Some sort of formal training (as defined later in this document) was deemed necessary in order to provide the opportunity for development of the essential knowledge, as well as the minimum skills, needed to operate the CMV. That is, just because a motor carrier offers formal training does not mean that the training is adequate, but it would be very difficult for a carrier's training to be judged adequate, unless it was formal.

See the End of the Report for Table 1

As can be seen from the table, relatively few (22 percent) of the heavy truck motor carriers surveyed that hire entry-level drivers provided formal training for them. However, well over half of the motorcoach and school bus carriers that hire entry-level drivers did so.

''Adequacy'' was defined in terms of how the formal training provided by a sub-sample of the carriers in each domain compared to the recommended minimum requirements for entry-level driver training established by industry experts. To be judged ''Adequate,'' a program had to be, on average across various sub-scores, in conformance with the criteria set by these experts. (The scoring system is described later in this document and in Volume III, Appendix B.)

The table shows that only about one-third of the carriers with formal training that were sampled had training that was adequate. The heavy truck private sector had the largest percentage of adequate training programs and the motorcoach private sector, the smallest. The third line of the table combines the prevalence information (the first line) and the adequacy information (line two) to provide an estimate of what percentage of the motor carriers in each domain, that hire entry-level drivers, provide adequate training for them. The motor carrier findings can be summarized as follows:

—The heavy truck private sector has the smallest percentage of carriers offering adequate training (about 9 percent). This means that, of those heavy truck carriers that hire entry-level drivers, only about one in ten would be expected to provide adequate training.

—The school bus private sector had the largest percentage of carriers providing adequate training (about 24 percent). Even with this, the highest percentage, only about one carrier in four carriers would be expected to provide adequate training.

None of the private sectors can be considered effective in ensuring adequate entry-level training, given these figures.

While Table 1 provides an estimate of the number of motor carriers in each domain that provide adequate training, a more basic question is, ''What percent of the drivers are being adequately trained?'' Also, it is known that publicly funded and proprietary schools are other sources of formally trained drivers for the heavy trucking industry, so a second question is, ''To what extent do the schools add to the percent of adequately trained truck drivers?''

Data to answer these questions come from Tables 3.15, 3.18, 4.9, 4.11, 5.8, and 5.10 in Volume III, which present findings from the Driver surveys. Several of the industry experts supporting the project indicated that training within the heavy truck industry has improved substantially within the last five years. So, it was considered desirable to examine the data for ''New'' drivers only, i.e., drivers with five or fewer years experience. The data for New drivers are compiled and summarized in Table 2 below.

It can be seen that about 62 percent of the 141 heavy truck drivers in the sample report receiving formal entry-level training. There were four sources of this formal training. By far, the most frequently reported source was proprietary schools (48 percent) followed by publicly funded schools (about eight percent). Military schools and company-operated schools combined accounted for only about six percent.

The second column of the table indicates what percentage of the drivers receiving each type of formal training reported receiving training that was judged as ''Adequate.'' The criteria used to evaluate the training reported by the drivers were the same as those used to evaluate the company training programs, as reported in Table 1 above.

The estimate of the percent of drivers adequately trained (the third column) was derived from the first two. For example, 44.8 percent of the 47.5 percent of drivers reporting proprietary school training received adequate training. So, 47.5 times 0.448 equals 21.3 percent as the estimate of the percent of New drivers who receive adequate training from this source. Publicly funded schools contribute another 4.2 percent and the combination of military and company schools account for 5.6 percent.

See End of the Report for Table 2

To summarize, 62 percent of the New heavy truck drivers reported receiving formal training, about 50 percent of which scored as adequate. This resulted in the estimate that 31 percent of New heavy truck drivers are receiving adequate training. It is interesting to compare these numbers with the numbers (not shown in the table) of the ''Experienced'' driver group. These are drivers who have been driving between six and 10 years. About 32 percent of the 229 Experienced drivers reported receiving formal training, about 51 percent of which scored as adequate, resulting in the estimate that about 16 percent of the Experienced drivers received adequate training. So, while the percentage of New drivers who report receiving formal training is almost twice that of Experienced drivers, the percent receiving adequate training is the same. The percentage of New drivers that receive adequate training is higher than for Experienced drivers because more New drivers receive formal training, not because a greater proportion of that formal training is adequate.

Comparing the Percent Drivers Adequately Trained figures from the table, it can be seen that the figure for School Buses is highest (about 35 percent) followed closely by Heavy Trucks (31 percent) then Motorcoaches (18 percent).

It is possible to answer the two questions that began this discussion as follows:

—How many drivers are adequately trained? For new drivers (driving five years or less), between 18 and 35 percent are adequately trained, although these figures may be optimistic.

—To what extent do the schools contribute to the percent of adequately trained truck drivers? They contribute substantially. The proprietary and publicly funded schools produced about seven times the number of adequately trained heavy truck drivers as did the company programs.

Based on the driver data, are the private sectors effective at ensuring adequate entry-level training? At best (school buses), only one-third of the recently trained entry-level drivers received adequate training and more than 40 percent of the reported training was not adequate. At worst (motorcoaches), only about two in ten drivers received adequate training, two-

thirds of the formal training was not adequate, and 50 percent of the drivers did not even receive formal training. Given these statistics, none of the private sectors can be considered as effective in ensuring adequate training of their entry-level drivers.

Thus the conclusions are the same, whether the data upon which they are based comes from the motor carriers (i.e., Table 1) or the drivers (Table 2).

There are three corollary issues related to training adequacy that deserve mention. The first has to do with ''exemplary'' training programs/activities. In order to assure that the study did not overlook good training programs or activities that were being carried out in any of the domains, survey respondents were asked to identify programs/activities they believed were exemplary, i.e., worthy of imitation. It should be emphasized that no criteria were imposed on the respondents—they used their own criteria to determine what was exemplary. Information was collected on these programs and their adequacy was scored.

The heavy truck respondents had no trouble identifying programs they thought were exemplary. Nearly all of the 27 programs they identified involved formal pre-service training. Fourteen (14) of the programs were run by carriers and, of this group, almost half included on-the-job training. The five programs recommended by the motorcoach respondents were formal training. Only one of the school bus respondents was able to recommend an exemplary formal training program.

In general, the adequacy of the ''exemplary'' programs was no better than the adequacy of the programs selected at random from the various domains. The programs recommended by our heavy truck respondents as being exemplary did not quite achieve the minimum standards determined by our trucking industry experts. On average, the motorcoach exemplary programs scored at about the recommended minimum level. The one school bus exemplary program was above the minimum standard.

Examination of the ''exemplary'' programs provided corroboration that the programs selected at random, at least from the heavy truck and motorcoach domains, were representative of the industries as a whole.

The second corollary issue relates to how big a motor carrier must be in order to provide formal training. Across all domains, even the smallest carriers offered formal training. While most of the exemplary programs were operated by medium to large carriers, several adequate or better heavy truck and motorcoach programs were operated by small carriers. It is apparent that adequate entry-level training need not be limited to the larger carriers.

The third corollary issue relates to industry plans that could result in future improvements in training program adequacy. Across all domains, few motor carriers, associations or insurance companies expressed plans that would increase the prevalence of formal training of entry level drivers. As noted earlier, without at least increasing the prevalence of formal training, it would be difficult for the overall adequacy of the training to improve. Therefore, it appears that the present level of training adequacy is not likely to improve due to the actions of the private sectors themselves.

What Are the Decision Factors and the Conclusions Related To Them?

Four decision factors (in addition to the adequacy of training) were identified that should be considered in determining FHWA's response to Congress. These decision factors are as follows:

—The accident problem, including both the magnitude of the accident problem and recent trends.

—The effectiveness of training as a solution to the problem, i.e., the relationship between training and accident reduction.

—The impact of mandated training, including factors that will negatively impact the condition of the industry, if training is required, such as:

—The impact of other Government Regulations.

—Driver turnover.

—Driver demand/shortage.

—Existence/effectiveness of other government programs, including the potential impact of the Commercial Drivers License (CDL), as well as the impact of other Government programs (if any) intended to reduce the CMV accident problem.

The conclusions of the study with regard to each of these factors are presented below. To provide perspective, the size of the industries (private sectors) is summarized prior to the presentation of the conclusions themselves.

Size of the Industry. The heavy truck domain is by far the largest of the three domains, and the motorcoach domain is the smallest. The heavy truck domain is also the most complex of the three. It is comprised of a number of different types of carriers, each with its own unique characteristics, problems and needs. In particular, the specialized fleets have different (but over-lapping) entry-level training needs, when compared to the needs of the for-hire and private carriers of cargo.

The accident problem. Discussion of the accident problem must include both the magnitude of the problem today and the problem trend over recent years.

Concerning the magnitude of the problem, the tabulation below shows the number of crashes, injuries and fatalities for each of the domains (to the extent known), for 1990:

	Trucks	Motorcoaches	School buses
Number of Crashes	318,500	Unknown	28,500
Number of Injuries	130,000	Unknown	24,000
Number of Deaths	5,254	39	128

The table shows that, in absolute numbers:

—Heavy truck accidents result in far more fatalities than either motorcoaches or school buses.

—School buses are involved in far fewer crashes, injuries and fatalities than large trucks, but they have about three times the fatalities of motorcoaches.

Our data source for non-fatal accidents does not discriminate among school buses, intercity buses (i.e., motorcoaches) and transit buses. However, it estimates that in 1990, injuries in bus accidents account for only about 1.1 percent of the injuries for all accidents (as compared to about 4 percent for medium and large trucks). For 1992, the bus injury accidents were about 0.7 percent of the total.

In addition:

—Heavy trucks have less than half as many accidents per 100 million miles

traveled than passenger vehicles, but they have 56 percent more fatal accidents.

—In about 25 percent of the fatal accidents, the truck driver was reported to have made an error or otherwise contributed to the accident; in 72 percent of these accidents the other driver was reported to have made an error, but not the truck driver.

Conclusions concerning the magnitude of the accident problem are as follows:

—It is clear that, for fatal accidents, heavy trucks have the greatest problem, followed by school buses, then motorcoaches. The percentage of all injuries attributed to bus accidents (motorcoaches, school buses and other types combined) is only about one-fourth of the percentage attributed to trucks.

—Truck drivers are involved in fewer accidents per 100 million miles driven than passenger vehicle drivers and they are less likely to be noted as having made an error contributing to the accident. However, when a truck driver is involved in an accident, it is more likely to involve at least one fatality. Comparable data were not available for motorcoach and school bus drivers.

With regard to accident trends, there are three conclusions:

—For heavy trucks, fatal accidents are less frequent (relative to the number of miles driven by trucks) than ten years ago. The vehicle involvement rate per 100 million miles traveled reduced from 5.8 in 1980 to 3.9 in 1990.

—The fatal accident involvement rate per 100 million miles traveled has decreased over the 11 years period between 1980 and 1990 by the same amount (32 percent) for both heavy trucks and passenger vehicles. Heavy trucks decreased from 5.8 to 3.9 and passenger vehicles decreased from 3.7 to 2.5. ''Passenger Vehicles'' are defined as vehicles, including automobiles and light trucks, with GVWRs of 10,000 pounds or less.

—There does not appear to be any trend in the accidents rates for motorcoaches and school buses.

There are at least two implications for decision-making within these conclusions:

—The magnitude of the accident problem parallels the size of the industry, i.e., heavy trucks is the largest industry and has the highest fatalities. However, heavy truck fatalities appear to be over-represented when size of the industry (number of drivers) is taken into consideration. The number of truck drivers is estimated to be about 5,600,000 while the number of motorcoach drivers is estimated at 156,000 and the number of school bus drivers at 742,000. There were 5,254 fatalities involving heavy trucks in 1990, 39 involving motorcoaches and 128 involving school buses. This calculates to 0.93 fatalities per 1000 truck drivers as compared to 0.25 fatalities per 1000 motorcoach drivers and 0.17 per 1000 school bus drivers.

This should not be taken to mean that truck drivers are poor drivers. The difference in the fatality rates is more likely due to exposure—the truck drivers drive more miles on average than motorcoach and school bus drivers. So, they are at higher risk of accident involvement. However, it does imply that any efforts to improve the safety of truck drivers (such as requiring adequate safety training) will likely have a greater return, in terms of accidents avoided, than the same efforts aimed at motorcoach and school bus drivers. Some ANPRM and survey respondents indicated that training should not be mandated because the industries are already doing a good job with various activities intended to reduce accidents. The trend data do show a reduction in fatality rates for combination trucks, but a reduction of the same magnitude occurred for passenger vehicles. It was beyond the scope of this study to determine the reasons for the declines. However, given the data available to the study, it was not possible to demonstrate any special effect of industry training activities, beyond whatever factors could be causing a general decline for both trucks and passenger vehicles.

The effectiveness of training as a solution to the problem. The findings as to the effectiveness of training were contradictory. While some in-house studies by carriers reported that training reduced accidents, other studies using random samples of drivers (including this study) noted a tendency for trained drivers to have slightly more accidents. Some researchers have attributed this tendency to the high variability in training quality, indicating that poor training may give the new driver a false sense of confidence in his/her abilities. However, this study found no evidence of a relationship between adequacy of the training the driver reported receiving and his/her frequency of accidents.

What implications for decision-making can be derived from these contradictory findings? The answer to this question seems to be that, while adequate training is a necessary condition for the reduction of CMV accidents, it is not a sufficient condition. Something more has to happen in order for training to have its effect. A discussion of these additional factors is contained in Volume III, Section 7.

The impact of mandated training. Survey respondents were asked whether mandated training would impact the condition of the industry or the drivers, the turnover problem or the driver shortage problem. For a given question, the individual groups within a domain sometimes differed greatly in their response distributions. However, none of the samples provided a uniformly extreme response to any of the questions. There was no consensus in the samples that requiring entry-level training would strongly influence any of these factors, one way or the other.

The following statements capture the general nature of the opinion within each domain:

—There are probably more people presently against mandated training than are for it, but not by a large margin. While the responses to the Advance Notice of Proposed Rulemaking (the ANPRM, as discussed in a later section) were heavily against mandated training, the responses of the random samples surveyed in this study were more equally divided (as discussed above). In addition, the CVSA Survey respondents were overwhelmingly in favor of mandated training. However, these persons were already drivers and not likely to be affected by the mandate.

—The majority of each domain could support mandated training if a program were developed that addressed and resolved the numerous economic and administrative issues. This is based on the responses to the ANPRM as well as comments made by the respondents to this study.

—There is also a substantial number of people who would support a performance-based (i.e., testing) alternative centered around strengthening the existing CDL program. The basis for this statement comes mainly from the responses to the ANPRM.

Clearly, any decision made by FHWA will have supporters and detractors. However, opposition will be reduced to the extent that the program (if any) promulgated by the agency addresses the economic and administrative issues.

Existence/effectiveness of other government programs. The conclusions related to this decision factor are as follows:

—Concerning the CDL program, the large majority of the survey respondents believed that the CDL would increase the likelihood of adequate training. The majority of the drivers believed that their CDL training went beyond what they needed to pass the CDL tests. There appears to be a general agreement that the CDL will have a positive impact on the adequacy of training.

—Concerning other government programs, it was concluded that:

—The activities of the Research and Special Programs Administration (RSPA) also includes the training of heavy truck drivers who transport hazardous materials. However, RSPA's intent is generally to prevent incidents involving hazardous cargo, rather than teaching driving skills to drivers. So, there is no conflict, and minimal overlap, with the driver training promulgated by RSPA.

—There appears to be nothing in any of the other programs that would conflict with, or substitute for, an intervention strategy intended to reduce CMV accidents.

Recommendations

It was stated earlier that none of the private sectors—heavy trucks, motorcoaches or school buses—are effectively providing adequate training. Data were presented to support the fact that none of the private sectors were totally effective in providing formal training for their entry-level drivers, i.e, the prevalence of formal training in all sectors could be improved. Data were also presented to show that relatively few of the formal training programs that were provided met the study criteria for adequacy.

However, FHWA should not make a decision concerning any intervention strategy, including requiring entry-level training, based on prevalence and adequacy information alone. The other decision factors discussed in this report must be considered in determining whether it is in the public interest to take some action, and for determining which action to take.

The data on the accident problem lead to one recommendation: If it is desirable to target fewer than all three domains, the heavy truck domain should be considered first priority, followed by motorcoaches.

The study data and the ANPRM responses suggest that there are three intervention strategies (in addition to doing nothing at all) that FHWA should consider:

—Training-based. This strategy involves requiring the training of entry-level CMV drivers.

—Performance-based. With this strategy, entry-level CMV drivers would be required to pass more comprehensive knowledge and skill tests than are presently required to obtain a Commercial Drivers License (CDL).

—Industry-based. Here, reduction in CMV accidents would be achieved by means of a carefully structured set of cooperative FHWA-industry initiatives intended to encourage better training of CMV drivers.

The conclusion was stated earlier that training, by itself, is not sufficient to reduce CMV accidents. This suggests that a combination of the above strategies would produce the best results. Either the Training-based strategy (which regulates the content of training) or the Performance-based strategy (which regulates the outcome of training) should be combined with the Industry-based strategy.

Which strategy—Training-based or Performance-based—should be selected? There are compelling arguments for both strategies. The Training strategy permits detailed control of the training content, even content like attitudes and accident avoidance skills, that is difficult to measure on a performance test. The Performance strategy provides the industries with greater flexibility in training their drivers, and the CDL structure exists as a starting point.

A more extensive analysis is needed to determine which alternative is preferable. To select between the two strategies, the recommended next steps are as follows. FHWA should:

—Develop draft program specifications. The objective should be to describe model Training and Performance-based programs in enough detail that their respective costs and impacts can be assessed. The Recommendations section in Volume II provides a listing of the elements that should be included in the program specifications.

—Obtain feedback on the draft programs from industry and the states. Revise the program specifications to address problems, reduce costs and improve potential effectiveness.

—Select between the two programs based on which provides the better cost/effectiveness.

One possible outcome of the above process could be a *hybrid program*, i.e., a combination of the Training- and Performance-based approaches that embodies the advantages of each.

When a strategy is determined, detailed training/performance standards should be developed. To establish the groundwork for standards development, it is recommended that FHWA adopt the three-element definition of entry level training that was used in this study, rather than pre-service training alone.

In this study, entry-level training was defined as all training received during the first three years of the driver's experience. Entry-level training included the following three elements:

—Pre-service Training. This is training received prior to starting work as a CMV driver. Pre-service training is the most reliable way to provide the basic skills and knowledge needed before the new driver goes on-the-job.

—On-the-job Training (OJT). OJT is provided when the new driver first begins actually hauling cargo or passengers. It provides a cost-effective way for the new driver to develop his/her skills.

—In-service Training. In-service training includes those activities provided by the motor carrier that are specifically intended to improve the safety-related skills and knowledge of its drivers, including (but not necessarily limited to) entry-level drivers. In-service training provides a means of refreshing skills, such as accident avoidance, that can degrade over time.

To develop the standards:

—The model tractor-trailer curriculum should be revised and expanded to include OJT and In-service training. This revised curriculum would be an essential component of either the Training-based or the Performance-basedstrategy.

—If the intervention is to include motorcoaches and/or school buses, FHWA should develop three- element model curriculum specifications for operators of these CMVs. These curricula should be developed in close cooperation with motorcoach and school bus industries.

FHWA should consider revising the model tractor-trailer curriculum, and developing the model motorcoach and school bus curricula, even if FHWA decides not to proceed with required training or some other intervention strategy. The existence of these up-to-date standard curricula will make it easier for concerned elements within the private sectors to voluntarily implement adequate formal training.

With regard to the Industry-based strategy, the recommended first step is to investigate and select initiatives for inclusion in the program. Possible initiatives are discussed in Volume III, Section 6. Once additional data are

collected, FHWA should develop a program specification for this strategy. It is recommended that FHWA advocate and act to initiate some form of Industry-based program whether or not a Training- or Performance-based program is carried out.

Supporting Detail

The remainder of this document contains summaries of study findings from which the foregoing conclusions and recommendations were derived. The section begins with a description of the scope of the effort and the definition of key concepts. Then the study methodology is briefly described. After this, the supporting detail leading to the conclusions and recommendations is summarized in the same order that the conclusions were presented in the previous section.

Scope of the Effort

Several definitions and decisions were made early in the project that limited the scope of the study. They are described below.

Commercial Motor Vehicles Included in the Study. ''Commercial motor vehicle'' was defined in accordance with the Commercial Motor Vehicle Safety Act of 1986. The study included all heavy duty trucks (i.e., over 26,000 Gross Vehicle Weight Rating), but passenger carrying CMVs were limited to Long Haul Regular Route (LHRR), Charter/Tour (C/T) and School Buses. Private Motor Carriers of Passengers (PMCP) and Metro/Transit Buses were excluded because they were not generally subject to the Federal Motor Carrier Safety Regulations (FMCSRs) at the commencement of the study. However, PMCPs are presently subject to the FMCSRs.

Thus, the study focused on three CMV ''domains'': Heavy duty trucks (hereafter referred to as ''Heavy Trucks''), Motorcoaches (including long haul and charter/tour buses) and School Buses.

Scope as Related to Hazmat Vehicles. With regard to vehicles used in the transportation of hazardous materials requiring placarding (''Hazmat'' vehicles), the study was limited to determining the prevalence and adequacy of the entry-level driving training received by drivers of these vehicles.

What is the ''Private Sector?'' In this study, the terms ''industry'' and ''private sector'' are used interchangeably. There is a different ''private sector'' or ''industry'' for each of the three CMV domains - heavy trucks, motorcoaches, and school buses.

A private sector includes companies, organizations, and individuals that have a direct interest in the transportation-related activities surrounding that particular domain and that are in a position to impact, directly or indirectly, the training of entry-level drivers. These groups and individuals fall into the following categories and subcategories (although not all private sectors have them all): driving schools (proprietary, publicly funded and company-operated), certification/accreditation groups, motor carriers, associations (including unions), insurance companies and drivers.

Definition of ''Adequate Training.'' Two focus groups were assembled, one from the trucking private sector and the other from the motorcoach and school bus private sectors. They were asked to define the minimum acceptable curricula for entry-level heavy truck, motorcoach, and school bus training. They reached consensus on minimum criteria on eight factors including classroom hours, practice (off- street and on-street) hours, student/teacher ratios, behind- the-wheel time and course content topics.

An adequacy scoring algorithm was derived that consisted of eight adequacy sub-scores and an Overall Adequacy Score (OAS). An adequacy sub-score reflects the extent to which a training program (or the training reported by a driver) deviates from a training criteria. For example, a school program that has a score of zero (0) on the Class/Lab Hours Sub-score would be exactly in conformance with the number of class/lab hours recommended by the experts. The OAS is the average of the eight sub-scores. So, a school with an Overall Adequacy Score of −11 has adequacy sub-scores that are, on average, 11 percent below the criteria values established by the experts.

Details concerning the criteria and the adequacy scoring procedures are contained in Volume III, Appendix B.

Support for Rulemaking

In addition to carrying out data collection activities for the decision factors listed above, another aspect of the project involved providing support for the rule making process.

The ISTEA required FHWA to issue a rulemaking on the need to require training of all entry-level drivers of CMVs. As a first step in rulemaking process, the Federal Highway Administration published an Advance Notice of Proposed Rulemaking (ANPRM) titled, Training for All Entry Level Drivers of Commercial Motor Vehicles (CMVs) in the 21 June 1993 issue of the Federal Register. The responses to the ANPRM were analyzed, organized and abstracted for this report.

Methods

The collection of data for the study involved six data collection activities:

—Industry Surveys. Representatives of the private sector (as defined above) of each domain were interviewed.
—Schools Surveys. A random sample of the schools that presently provide training for entry-level drivers in each domain were surveyed. The term ''school'' was defined broadly to include motor carriers who provide formal training for their own entry-level drivers, as well as proprietary and publicly funded schools.
—Driver Surveys. The drivers themselves were interviewed.
—Accident Data Collection. Truck, motorcoach and school bus accident and accident trend data were obtained from National Highway Traffic Safety Administration and National Safety Council Publications.
—Federal Agencies Data Collection. Federal government agencies were contacted to determine the existence of policies, regulations or practices that could impact the effectiveness of the private sector's efforts to ensure adequate training of entry-level CMV drivers.
—CVSA Data Collection. The Commercial Vehicle Safety Alliance (CVSA) agreed to include eight questions about driver training in their Roadcheck '93 survey. This survey was performed in June 1993.

In addition to the data collection activities listed above, there was a seventh data collection activity referred to as the *Exemplary Programs Data Collection*. This activity was considered apart from the others because it did not directly impact any of the decision factors.

The goal of the Exemplary Programs data collection was to identify the best of the training programs that presently exist within each domain, i.e., to define what is possible for the industry to accomplish. Exemplary Programs were identified by the Industry Survey samples and contact was made with these organizations to obtain information about the programs/activities.

The adequacy of the entry level formal training programs recommended as being exemplary was determined, as was the adequacy of the formal training programs identified from our random samples of schools and motor carriers. We also examined the adequacy of the entry-level training described by our driver samples.

Table 3 shows the number of industry organizations of each type that were included in the Industry Survey for each

domain. It also shows the number of schools, exemplary programs and drivers surveyed.

In addition, a total of 5869 CVSA questionnaire forms were received and analyzed. As expected, very few buses (only 17) were included in the sample. The large majority of the drivers (88.6 percent) were operating tractor/single trailer combinations, but a small number (146) of twin, double and triple drivers were included. Straight trucks comprised 8.5 percent of the sample.

See end of the Report for Table 3

Prevalence/Adequacy of Private Sector Programs

The study focused on three types of private sector programs:

—Training Programs, i.e., formal, structured courses.
—Training Activities, i.e., isolated, short duration, events such as watching videos, reading manuals and attending safety meetings.
—Training Support Activities, i.e., anything that encouraged/supported the actual training of entry- level drivers.

In the following paragraphs, the findings for the ''exemplary'' programs recommended by our survey respondents will be summarized first, then the findings obtained from our random samples of industry associations, motor carriers and schools.

Exemplary Training Programs/ Activities. The exemplary training programs and training activities are first described and then their adequacy is discussed.

What is an Exemplary Training Program/Activity? The heavy truck, motorcoach and school bus Industry survey respondents were asked to recommend training programs or training activities that they believed were exemplary, i.e., worthy of imitation by the rest of the industry. The respondents were free to define exemplary programs/activities using any criteria they chose.

Program/Activity Descriptions. The heavy truck industry survey respondents recommended 27 exemplary training programs/activities. Fourteen (14) were company-operated training programs. The companies themselves were generally large to very large. Nearly all reported that they require their entry-level drivers to have graduated from a truck driving school and they provided on-the-job training (OJT) ranging from four weeks to six months. Six reported that they operate their own company schools.

Thirteen (13) were school programs. All reported offering classroom instruction and both range and on-street practice. The average duration for the proprietary schools was 235 hours; for the publicly funded schools it was 334 hours.

Five motorcoach exemplary training programs were identified, all carried out by Long Haul Regular Route motor carriers. These companies were medium in size to very large and the schools ranged in duration from 152 hours (including 50 hours on-the-job) to 250 hours.

Four school bus exemplary programs/ activities were identified, but only one was a formal training program. The program had a total duration of 40 hours with 10 hours of actual behind-the-wheel time per student.

Proportionally more exemplary training programs/activities were identified by the heavy truck group. Possibly one reason is that the training of drivers has higher visibility in the trucking industry due to the public attention that has been focused on truck safety in the last few years.

Adequacy. We determined adequacy scores for the exemplary formal training programs. The Overall Adequacy Scores (OASs) were as follows:

—For heavy trucks, the mean OAS across the 17 programs was −11 (i.e., the sub-scores were, on average 11 percent below the criterion values). Seven of the programs (41 percent) were adequate, i.e., had zero or higher Overall Adequacy Scores.
—For motorcoaches, mean OAS for the five programs was −1.6. Two of the five programs had an OAS of zero or higher.
—The OAS for the one exemplary school bus program was +16.1.

Sampled Training Programs/ Activities. Within the Industry Survey groups, with one exception, only the motor carriers and schools actually trained drivers, i.e., had formal training programs or training activities. The one exception was the teamsters union, which does provide formal training.

Prevalence. Table 4 compares the three domains in terms of the proportions of each that hire entry level drivers, and that provide either formal training or training activities for them.

While over half of the heavy truck and motorcoach motor carriers hire only experienced drivers, over 95 percent of the school bus fleets hire entry level drivers. Also, not only are the heavy truck motor carriers least likely to hire entry-level drivers, they are also the least likely to provide formal training for them, once they are hired.

Concerning the sizes of the fleets reporting formal training:

—Heavy truck carriers of all sizes report that they provide formal training, but 58 percent of the fleets in our sample larger than 200 drivers provide formal training, while only six percent of the smaller companies do.
—Motorcoach carriers of all sizes reported that they provide training. LHRR fleets as small as 15 drivers, and C/T fleets as small as nine drivers, reported having formal training.
—School bus fleets of all sizes offer formal training.

See End of Report for Table 4

Effectiveness. Table 5 summarizes the adequacy score data for the random samples of formal training programs across the three domains.

The tabulation shows that, for heavy trucks, the mean Overall Adequacy Score (OAS) for the schools was substantially lower than the mean OAS for the company operated programs.

Comparing company programs across the three domains, it is clear that the heavy truck company programs group has the highest mean OAS. On average, they were about 20 percent above the criterion values, as compared to only about 2 percent for the school bus programs and a minus 17 percent for the motorcoach programs. Also, more of the heavy truck company programs scored zero of better.

Plans for the Future. The following summarizes the plans for future training programs and activities reported by our Industry Survey groups:

—Within the heavy truck domain, only 10 percent of the for-hire fleets and 18 percent of the private fleets had plans. Generally, these plans were vague and uncertain, beyond obtaining and showing videos and hiring instructors.
—Only about 14 percent of the motorcoach motor carriers had any plans, and these were for training activities. The activities mentioned included a defensive driving course, videos, safety meetings and a driver recertification program.

See End of Report for Table 5

—Only about one-third of the school bus motor carriers have plans for future training activities. Three of the operators are uncertain what they are going to do and two expect to implement formal training courses.

Size of the Industries

The following tabulation provides estimates of the number of motor carriers and drivers in each of the three domains.

	Heavy trucks	Motorcoaches	School buses
Number of fleets	230,000	5,000	14,700
Number of drivers	5,600,000	156,000	742,000

Each of the domains may be further characterized as follows:

—Heavy truck fleets and drivers are approximately equally divided between for-hire and private motor carriers (including specialized fleets, e.g., fleets operated by utility companies, construction companies and refuse haulers). There are about 100,000 owner-operators.

—Of the 5,000 motorcoach fleets presently in operation in the United States, about 114 are Long Haul Regular Route carriers who employ about 9,400 drivers.

—The 14,700 public school districts that bus students are divided into 3,280 private fleets (contractor operated) and 11,420 public fleets (school system operated). As to the number of drivers, for private fleets this estimate is 262,400 drivers and for public fleets, 479,700 drivers.

Relationship Between Training and Accident Reduction

The Industry Survey representatives, the motor carriers and the schools were asked for any data they had demonstrating the relationship between training and accidents. Three heavy truck motor carriers reported in-house studies indicating that training reduced accidents. None of the motorcoach or school bus respondents were able to identify relevant studies.

Early in this project, a literature search was carried out to determine, in part, the extent to which driver training impacts accidents. Two studies were found that reported accident reduction following school bus driver training: One reported a 23 percent decrease in accidents and the other a 22 percent reduction in driver at fault accidents, during a period in which the number of miles driven doubled. There were no studies providing information on the link between training and accident reduction for motorcoach drivers.

However, four other studies found that formally trained drivers reported having the same or slightly more accidents than drivers trained informally. The earliest study was published in 1979. It reported, based on a survey of U.S. truck drivers, that trained drivers indicated having more accidents than drivers who were not trained. The Regular Common Carrier Conference (RCCC) asked truck drivers about the training they received and their accident experience as part of the motor carrier safety surveys they conducted in 1987, 1988 and 1989. Analysis of the 1988 survey responses (878 combination truck drivers) showed that 41 percent of the trained drivers had a truck accident in the previous five years, compared to only 32 percent of the drivers without formal training. This was a statistically significant result (.05 level). A similar result was obtained in the previous year's survey (1,762 interviews), although no detail was provided. The 1989 survey showed about the same level of accidents for trained (27 percent) and non-trained (29 percent) drivers.

A GAO report describes the wide variation in truck driver training and the RCCC citations make the point that this variability may mask the effect of good training. They indicate that their finding ''* * * points to the need for establishing and maintaining high standards so that drivers are taught accident-reducing skills, rather than given a false sense of security.''

In this study, data on drivers' accident history was also collected. Here also, the formally trained drivers reported having somewhat more accidents, across all three domains. It was expected that drivers whose training scored as adequate (i.e., an OAS of zero or higher) would have fewer accidents than those whose training scored lower. However, there was no suggestion of a consistent relationship between training adequacy and accidents in the data. In fact, there were individual drivers reporting one or more accidents who had relatively high adequacy scores.

The Impact of Mandated Training on the Industries

Table 6 summarizes the responses of the Industry Survey respondents in each of the three domains to the eight questions related to the condition of the industries and the impact of mandated training.

Existence of Other Government Programs

This research area addresses the potential impact of the CDL and the identification of other Federal government programs that might interact, conflict or be redundant with mandated training (or some other intervention strategy).

Potential Impact of the CDL. Data relating to the impact of the CDL came from our survey respondents from the Industry, Schools and Driver Surveys, and the ANPRM commenters.

Industry and Schools Surveys Findings. We asked our Industry and School Surveys respondents, ''What effect, if any, do you think CDL testing will have on the likelihood that entry-level [name of domain] drivers will be adequately trained?'' Almost 65 percent of the heavy truck sample, 74 percent of the motorcoach sample and 64 percent of the school bus sample said it would increase the likelihood.

Driver Survey Findings. We asked our drivers who began driving on or after the time when the CDL went into effect, ''How well did your training prepare you for the CDL [Knowledge or Skill] test?'' The responses were as follows:

—For the knowledge test question, the most frequent response (across all domains) was, ''Gave me somewhat more knowledge than I needed.''

—For the heavy truck and school bus samples, the most frequent response to the skill test question was ''* * * somewhat more practice than I needed.'' For the motorcoach sample it was, ''Gave me just enough practice.''

See End of Report for Table 6

Other Government Programs Potentially Impacting an Intervention. Two listings of government programs/initiatives were identified, in addition to the CDL, that will or could interface with any FHWA program/initiative to reduce CMV accidents. The first listing identifies those government agencies that regulate the activities of fleet operators/drivers and/or make requirements concerning training, recordkeeping and reporting. Any mandated entry level heavy truck driver training curriculum or standard, and the program structure to administer the requirement should be consistent with (i.e., not conflict with) these existing Federal requirements. This listing is as follows:

—Interstate Commerce Commission. Regulations, as well as recordkeeping and reporting requirements

—Research and Special Programs Administration. HAZMAT training, inspection and enforcement

—Environmental Protection Agency. Worker Protection Standard, SARA

Title III requirements, and the Clean Air Act Emergency Response Plan

—Occupational Health and Safety Administration.

Hazard Communication Standard

—Federal Highway Administration. Federal Motor Carrier Safety Regulations, as well as recordkeeping and reporting requirements

The second listing presents potential sources of funding to drivers, employers and/or schools. Any program to administer a mandated training requirement should be developed with such funding sources in mind, in order to mitigate the economic impact of mandated training and facilitate acceptance of the requirement. We identified two potential sources of funding:

—Department of Education. The Literature Review Report describes the changes in the Title IV funding and its negative impact on both schools and persons wishing to enter training as a heavy truck driver. ANPRM respondents suggested that there is a need for further changes to the Title IV if it is to support a mandated training requirement.

—Department of Labor. The Job Training Partnership Act (JTPA) provides block funding to states and local jurisdictions. The states, in particular, could be encouraged to make use of their JTPA funds in support of the mandated training, should FHWA implement the requirement.

Responses to the ANPRM and Conclusions

A total of 96 letters, signed by 104 persons, were received in response to the ANPRM. Of these 104 respondents, 65 were associated with the trucking industry (including 34 motor carriers), 16 were from the school bus industry, one represented a motorcoach association, 16 were associated with state government, and 8 were other.

The ANPRM solicited responses to thirteen (13) questions. In addition to or instead of responding to the questions, many of the persons responding chose to address other topics related to the subject area. Analysis of these responses indicated that they related to four general issues.

In the summary that follows, only the questions with high response rates are included. Several questions relating to how adequacy should be defined and what standards exist for determining adequacy have been combined, since similar answers were provided to these questions. The questions have been abbreviated to save space. The section ends with a summary of the four general issues. Refer to Responses to the ANPRM in Volume II for the complete text of each question and an individual summary of each question/issue.

Defining Standards for Adequacy of Training (Questions 1, 2, 4 and 8)

A total of 9 standards were identified. By far, the two most frequently mentioned standards were the FHWA Model Curriculum as embodied in the Professional Truck Driver Institute of America, Inc. (PTDIA) Standards, and the CDL Licensing Standards. The PTDIA standard includes classroom instruction, range practice and on-street practice totaling 147.5 per-student hours. This is equivalent to the 320 class hours required by the FHWA Model Curriculum. The CDL tests consist of a general knowledge test, specialized knowledge tests, a vehicle component inspection and a road test.

What an Adequate Training Program Should Include (Question 3)

The most frequent response from the truck group respondents (made by 22 of the 38 respondents) was that the program should conform to the FHWA Model Curriculum/PTDIA Standard (for both content and hours). Several of these persons indicated additional topics, or thought the curriculum should be updated.

The motorcoach respondent offered topics, indicating that they apply to both trucks and buses. The only school bus group response came from an association, which provided the outline for a school bus driver training program they are supporting.

The most frequent suggestion for program methods was to emphasize behind-the-wheel instruction.

Adequacy of the CDL in Measuring Driver Performance (Question 5)

One-third of the 64 commenters responding to this question think the CDL tests accurately measure a driver's performance. Roughly one-third of the commenters answered ''Yes,'' if the CDL were modified in a specific way. The remaining one-third did not think the CDL tests accurately measure a driver's performance.

By far, the most common reason given for supporting the CDL was the respondent's belief that the tests are sufficiently comprehensive to accurately measure a driver's performance. Those who qualified their support most frequently indicated the need for additional training and/or the need to test additional knowledge and skills.

Should Training be Federally Mandated? (Question 6)

Over 93 percent of the 104 respondents addressed Question 6. Overall, they were against mandating training by a margin of two-to-one. However, there were important differences among the groups:

—The Truck groups were mixed:

—The Schools/School Association group (11 respondents) was two-to-one in favor of the mandate.

—The three union respondents were also in favor of the mandate.

—All of the other truck groups (48 respondents) were against.

—The Bus groups were unanimously against.

—The State Government and Other groups were equally divided.

The most frequently mentioned reasons in favor were that, if training was not required, the carriers and schools generally would not comply; regulations need to be set; and the FHWA/PTDIA Standard exists as a starting point.

The most frequent reasons against were that the CDL exists and is sufficient; mandated training will increase costs for carriers; and the schools and carriers have or will provide quality training on their own because it is in their best interest. The school bus operators indicated that they do not favor mandated training because the state- required training is sufficient.

General Issues

The four general issues identified from the comments of the ANPRM respondents were as follows.

Program Administration. About half of the 16 state government respondents see the need for the states to develop costly programs for certifying and monitoring training courses. Three commenters indicate that maintaining records also will be expensive. Some question who will fund the program and whether the enormous cost would outweigh the benefits.

Program Quality/Cost and Who Will Pay. A frequent comment was that the cuts in the Federal Student Loan program have reduced student access to CMV driver training and reduced the duration and quality of the courses. Four commenters indicate that the government should do more to help students acquire the funds they need to attend school.

Broadening the Requirement. Twelve (12) persons provided comments, indicating that the requirement should also include hazardous materials training, and the training of transit bus, Longer Combination Vehicle (LCV), and

foreign drivers. Two respondents recommended screening existing drivers and providing training for those with problems.

Effect on Specialized Fleets. Five (5) private fleet respondents indicated that special fleets have special training requirements and that a generic mandatory training standard, centered around the training needs of over-the-road freight haulers, would not be suitable. Training to this standard would be irrelevant to their needs, and costly.

Tables 1 through 6 follow.

Executive Summary

TABLE 1.—SUMMARY OF TRAINING ADEQUACY FINDINGS FOR MOTOR CARRIERS

	Heavy trucks	Motorcoaches	School buses
Percent of motor carriers hiring entry-level drivers that provide formal training for them	21.6	62.5	71.2
Percent of motor carriers sampled whose formal training was judged as ''Adequate''	37.5	29.6	33.3
Estimate of the percent of motor carriers hiring entry-level drivers that provide adequate training	8.1	18.5	23.7

TABLE 2.—SUMMARY OF TRAINING ADEQUACY FINDINGS FOR DRIVERS

Formal training methods, by domain [1]	Percent drivers trained [2]	Percent programs adequate	Percent drivers adequately trained [3]
Heavy trucks:			
Proprietary	47.5	44.8	21.3
Public funded	7.8	54.5	4.2
Company/military [4]	6.4	87.5	5.6
Total	61.7	50.0	31.1
(Sample Size)	(141)		
Motorcoaches:			
Company [5]	50.0	36.4	18.2
(Sample Size)	(22)		
School buses:			
Company	58.6	58.8	34.5
Other	17.2	0.0	0.0
Total	75.9	45.5	34.5
(Sample Size)	(29)		

[1] This analysis includes only ''New'' drivers, i.e., drivers with five or fewer years experience.
[2] Values are percent of the sample size, which includes both formally trained and other trained drivers.
[3] See text for a description of how these values are calculated.
[4] These groups were combined because they include only nine cases, four military and five company.
[5] Motorcoach drivers sampled reported only company programs as their source of formal training.

TABLE 3.—SAMPLE SIZES FOR EACH DOMAIN

	Heavy trucks	Motorcoaches	School buses
Industry survey:			
Associations	12	2	3
Insurance companies	11	5	5
Motor carriers	82	22	22
Schools	24	.....	.....
School survey	41	27	30
Exemplary programs	27	5	4
Driver survey	371	43	50

TABLE 4.—INCIDENCE OF ENTRY-LEVEL TRAINING BY DOMAIN

	Heavy trucks	Motorcoaches	School buses
Master sample size	272	155	214
Percent of sample that:			
Hire experienced drivers	59.2	53.5	4.2
Hire entry level	40.8	46.4	95.8
Provide no training	1.8	9.0	2.3
Do provide training	39.0	37.4	93.5
Training activities	30.2	8.4	25.3
Formal training	8.8	29.0	68.2

TABLE 5.—SUMMARY OF TRAINING PROGRAM ADEQUACY SCORES BY DOMAIN

	Heavy trucks		Motor-coaches	School buses
	School programs	Company programs	Company programs	Company programs
Sample size	41	24	28	30
Mean overall adequacy score (OAS)	−7.2	20.6	−16.6	2.3
Percent adequate (i.e., OAS zero or above)	22.0	39.1	29.6	33.3

TABLE 6.—SUMMARY OF INDUSTRY IMPACT QUESTIONS BY DOMAIN

Industry impact questions [1]	Response index values [2] by domain		
	Heavy trucks	Motorcoaches	School buses
Condition of motor carriers:			
Present condition, as compared with five years ago [Range: Much worse off (−2) to much better (2)]	−0.47	0.00	−0.08
Effect of mandated training [Range: Hurt (−1) to Help (1)]	−0.03	0.15	0.08
Condition of drivers:			
Present condition, as compared with five years ago [Range: Much worse off (−2) to much better (2)]	−0.13	0.19	0.61
Effect of mandated training [Range: Hurt (−1) to help (1)]	−0.33	0.65	0.45
Driver turnover as a problem:			
Degree of seriousness [Range: No problem (0) to serious problem (−3)]	−1.99	−1.73	−1.93
Effect of mandated training [Range: greatly increase turnover (−2) to greatly reduce turnover (2)]	0.21	0.35	−0.04
Driver shortage as a problem:			
Degree of seriousness [Range: No problem (0) to serious problem (−3)]	−1.59	−1.56	−1.89
Effect of mandated training [Range: greatly increase shortage (−2) to greatly reduce shortage (2)]	−0.14	0.19	−0.30

[1] The actual phrasing of these questions, as they appeared in the Industry Surveys, are presented in Volume III, Sections 3, 4, and 5.
[2] See the Volume III, Section 7 for a description of how the Response Index values were calculated.

[FR Doc. 96–10206 Filed 4–24–96; 8:45 am]
BILLING CODE 4910–22–P

DEPARTMENT OF COMMERCE

National Oceanic and Atmospheric Administration

50 CFR Part 285

[Docket No. 960416112–6112–01; I.D. 030896D]

RIN 0648–AI29

Atlantic Tuna Fisheries; Annual Quotas and Effort Controls

AGENCY: National Marine Fisheries Service (NMFS), National Oceanic and Atmospheric Administration (NOAA), Commerce.

ACTION: Proposed rule; request for comments.

SUMMARY: NMFS proposes to amend the regulations governing the Atlantic tuna fisheries to: Set Atlantic bluefin tuna (ABT) fishing category quotas for the 1996 fishing year, revise allocations to monthly quota periods and establish the effort control schedule in the ABT General category, allow the partial transfer of quotas among Purse Seine category permit holders and amend landing requirements, and increase minimum sizes for Atlantic yellowfin and bigeye tunas. The proposed regulatory amendments are necessary to implement the 1994 recommendation of the International Commission for the Conservation of Atlantic Tunas (ICCAT) regarding fishing quotas for bluefin tuna, as required by the Atlantic Tunas Convention Act (ATCA), and to achieve domestic management objectives. NMFS will hold public hearings to receive comments from fishery participants and other members of the public regarding these proposed amendments.

DATES: Comments are invited and must be received on or before May 28, 1996. See **SUPPLEMENTARY INFORMATION** for dates, times, and locations of public hearings.

ADDRESSES: Comments on the proposed rule should be sent to, and copies of supporting documents, including a Draft Environmental Assessment-Regulatory Impact Review (EA/RIR), are available from, William Hogarth, Acting Chief, Highly Migratory Species Management Division, Office of Fisheries Conservation and Management (F/CM), NMFS, 1315 East-West Highway, Silver Spring, MD 20910–3282.

FOR FURTHER INFORMATION CONTACT: William Hogarth, 301–713–2339.

SUPPLEMENTARY INFORMATION: The Atlantic tuna fisheries are managed under regulations at 50 CFR part 285 issued under the authority of ATCA. ATCA authorizes the Secretary of Commerce (Secretary) to implement regulations as may be necessary to carry out the recommendations of ICCAT. The authority to implement ICCAT recommendations has been delegated from the Secretary to the Assistant Administrator for Fisheries, NOAA (AA).

Based on a revised stock assessment, parties at the 1994 meeting of ICCAT adopted a recommendation to increase the annual scientific monitoring quota of ABT in the western Atlantic Ocean from 1,995 metric tons (mt) to 2,200 mt. The share allocated to the United States was set at 1,311 mt, with the provision that unused quota from 1995 be carried over or overharvest be subtracted from the 1996 total. This proposed rule would implement that quota recommendation, accounting for overharvest and underharvest in each

regulatory category as well as inseason transfers between certain categories.

In addition to the proposed quota allocations, NMFS proposes changes to operations of the ABT General and Purse Seine permit categories. Changes to regulations pertaining to the General category would serve to lengthen the fishing season and facilitate enforcement by revising the percentages of total allowable catch apportioned into monthly quotas and by changing restricted fishing days from Sunday, Monday and Wednesday to Sunday, Monday and Tuesday. Changes to regulations pertaining to the Purse Seine category would allow Purse Seine permit holders to transfer a portion of their annual allocation to other Purse Seine permit holders; these permit holders are already authorized to transfer the total annual allocation among themselves. Also, it is proposed that purse seine operators be allowed to land dressed ABT.

Finally, NMFS proposes to increase yellowfin and bigeye tuna minimum size limits from 22 inches (56 cm) to 27 inches (69 cm) according to the curved measurement method, to prevent ABT between 22 inches (56 cm) and 27 inches (69 cm) from being inadvertently retained. Increased catch of ABT below the minimum size of 27 inches (69 cm) has been attributed to misidentification of small tunas. NMFS has determined that these requirements would bring the United States into compliance with the 1994 ICCAT recommendations pertaining to management of ABT and would improve economic returns to fishery participants.

Fishing Category Quotas

In the 1992 final rule (57 FR 32905, July 24, 1992), NMFS established quotas for the various commercial and recreational categories in the ABT fishery, based upon the historical share of catch in each of these categories during the period 1983 through 1991. These quotas were used in 1992, 1993 and 1994, with overharvests and underharvests added and subtracted where appropriate (as required by ICCAT) and with some inseason transfers.

The total 1996 quota allocated by ICCAT to the United States is 1,311 mt, to be used for scientific monitoring purposes. Proposed fishing category allocations for 1996 (see Table) were determined using to the following procedure:

Step 1. Determine the difference between the 1995 quotas (adjusted for within year transfers among categories) and the 1995 landings for each fishing category, subcategory and total.

Step 2. Subtract or add the differences obtained from Step 1 to the quotas set in 1992 (base quotas) for the total fishery, each category, and subcategory (except for the Purse Seine category for which the base quota of 301 mt was reduced to 250 mt in 1995, and the Incidental category from which 3 mt were transferred in 1995 to allow for an Angling ''trophy'' fish category).

Step 3. Adjust, as inseason actions, the results from Step 2 for the 1996 quotas by: (1) Transferring 10 mt from the Reserve to the General category to ensure that the October fishery in the New York Bight occurs; (2) transferring 43 mt from the Incidental category to the Reserve to ensure that the total U.S. quota is not exceeded; and (3) transferring 95 mt from the Reserve to Angling to increase the likelihood that the Angling category remains open throughout most of the year.

Thus, the proposed ABT fishing category quotas for the 1996 fishing year are as follows: General category—541 mt; Harpoon Boat category—53 mt; Purse Seine category—251 mt; Angling category—243 mt; Incidental category—110 mt; Reserve—108 mt.

The proposed transfer of 95 mt to the Angling category large school-small medium quota in part accounts for the net overharvest of 74 mt in 1994–95 for all size classes. An additional 21 mt are added to the Angling category quota to account for landings of large school-small medium ABT observed in the North Carolina fishery during January through March 1996. This additional 95 mt would allow NMFS to reopen the large school-small medium segment of the ABT Angling category previously closed (61 FR 11336, March 20, 1996) and allow adjustment to the Angling Category daily catch limit previously restricted to one ABT per vessel per day (61 FR 8223, March 4, 1996).

These transfers from the Reserve are authorized under § 285.22(i), given the high likelihood, based on historical catch rates and effort levels, that landings in the General and Angling categories will fully meet their quotas. Participation in the General and Angling categories has increased in recent years and has resulted in early closures for these categories. In addition, the General and Angling categories currently provide the most useful fishery-dependent scientific data for stock assessment purposes.

PROPOSED ABT QUOTAS BY FISHING CATEGORY

	1995 quota	Inseason transfers to quota	Net 1995 quota	1995 landings	1995 overage/(underage)	1992 base quota	Quota for 1996 net of over/under	Adjustments to quotas	Proposed 1996 quota
General	438	[a] +120	558	558	0	531	531	+10	541
Harpoon	47	[b] +10	57	57	0	53	53	0	53
Incidental	125	[c] −10	115	72	(43)	110	153	−43	110
Other	2	.....	2	1	(1)	1	2	−1	1
Longline	123	−10	113	71	(42)	109	151	−42	109
North	23	+15	38	31	(7)	23	30	−7	23
South	100	−25	75	40	(35)	86	121	−35	86
Purse Seine	250	0	250	249	(1)	[e] 250	251	0	251
Angling	[d] 330	0	330	404	74	222	148	[f] 95	243
School	248	0	148	109	(39)	99	138	0	138
North	78	0	78	.....	.....	53	73	0	73
South	70	0	70	.....	.....	47	65	0	65
Lrg school/small med	178	0	178	293	115	120	5	+95	100
Trophy	4	0	4	2	(2)	3	5	0	5
Reserve	145	−120	25	0	(25)	145	170	[g] −62	108
Total	1,335	0	1,335	1,340	5	1,311	1,306	0	1,306

[a] General category received a transfer of 110 mt from the Reserve and 10 mt from the Incidental longline South.
[b] Harpoon category received a transfer of 10 mt from the Reserve.
[c] Incidental category provided 10 mt to the General category; also, 15 mt were transferred from longline south to longline north.

[d] Angling category quotas for 1995 are expressed as what they would have been if the Large Pelagic Survey final results had been available.
[e] The 1992 base quota of 301 mt was reduced to 250 mt in 1995.
[f] The 95 mt transferred from the Reserve to the Angling category represents the overage due to the delay of the Large Pelagic Survey (74 mt) plus the 21 mt of landings already observed in January and February 1996 in North Carolina.
[g] The net Reserve is equal to: 170 mt − 10 mt (to General) − 95 mt (to Angling) + 43 mt (from Longline) = 108 mt.

General Category Effort Controls

In the 1995 fishery, NMFS implemented time period subquotas for the ABT General category to increase the likelihood that fishing would continue throughout most of the year for scientific monitoring purposes. These subquotas also addressed concerns regarding allocation of fishing opportunities, allowed for a late season fishery, and improved marketing conditions. Due to delayed effectiveness of the 1995 rule changes, and the unexpected increase in recreational landings at the end of the season, these monthly subquotas were not fully implemented.

NMFS proposes to adjust the time period subquotas of the General category quota in 1996. Based upon historical catch and recent trends in catch rates and fishing effort, the General category quota is proposed to be distributed as follows: 25 percent in June-July; 35 percent in August; 30 percent in September; and 10 percent in October–December. These percentages would be applied only to the base quota of 531 mt, with the remaining 10 mt being reserved for the New York Bight fishery in October. Thus, of the 531 mt total, 133 mt would be available in the period beginning June 1 and ending July 31; 186 mt would be available in the period beginning August 1 and ending August 31; 159 mt would be available in the period beginning September 1 and ending September 30; and 63 mt (53 mt based on 10 percent, plus 10 mt New York Bight fishery) would be available in the period beginning October 1 and ending December 31.

Attainment of quota in any period would result in a closure until the subsequent period, whereupon any underharvest or overharvest would be carried over to the subsequent period to adjust the base quota for that period. Inseason closures would be filed at the Office of the Federal Register, stating the effective date of closure, and announced through local media and over NOAA weather radio.

This proposed rule would change allowable fishing days for vessels permitted in the ABT General category. In 1995, daily closures (Sunday, Monday, and Wednesday) were implemented to lengthen the fishing season. This rule proposes to remove Wednesday as a restricted fishing day and include Tuesday as a restricted fishing day. Having three consecutive days closed would increase the likelihood of accomplishing the objective of temporarily extending the fishing season by facilitating enforcement of the daily closures. Economic conditions for vessel crew members who fish part time and/or must travel between home and fishing ports would also be improved.

NMFS is proposing to maintain Sunday closures, with the exception of certain holiday weekends, during the effective period of effort controls. It is also proposed that the effective period of the effort controls be limited to mid-July through mid-September, corresponding to the historical period when catch rates are highest.

Thus, under this proposed rule, persons aboard vessels permitted in the General category or the Charterboat/Headboat category would not be allowed to fish for, catch, retain or land large medium or giant ABT on the designated restricted fishing days listed below. This management measure would serve to prevent overharvest of quota in any period and is tied, in part, to the ''Sunday-Monday-Tuesday'' principle, and to market closures in Japan (the major export market), to minimize potential negative economic consequences to U.S. fishermen. Some of the standard restricted fishing days would be eliminated according to market factors as well as holiday periods. The proposed effort controls would improve distribution of fishing opportunities without increasing ABT mortality.

NMFS proposes that, for 1996, scheduled days on which no large medium or giant ABT may be retained by persons aboard vessels permitted in the General category or Charter/Headboat category be: July 14, 15, 16, 21, 22, 23, 28, 29, and 30; August 4, 5, 6, 9, 10, 11, 12, 13, 18, 19, 20, 25, 26, and 27; and September 3, 8, 9, 10, 15.

Purse Seine Requirements

This rule proposes to implement, for the Purse Seine category alone, a more flexible method of allocation of the domestic U.S. quota for 1996, notably, a market-based allocation alternative. Current regulations allow for Purse Seine permit holders to transfer, in whole, their annual allocation of the Purse Seine category quota, or to permanently consolidate Purse Seine permits.

As proposed, individual purse seine allocations of bluefin tuna quota would be transferable, in whole or in part, to any other purse seine vessel permitted in the Atlantic tunas fisheries. Wholesale or partial transfers of allocation would require written notice to NMFS 3 days in advance of landing any bluefin tuna transferred from another purse seine vessel's annual allocation. Such notice would indicate the transfer date, amount (mt) transferred, and the permit numbers of vessels involved in the transfer.

In addition, it is proposed to allow purse seine vessel operators to land ABT in dressed, rather than round, form. This proposed amendment would extend to purse seine vessels the current ABT landing requirement applicable to all other vessels engaged in recreational or commercial fishing.

Minimum Size for Yellowfin and Bigeye Tuna

NMFS proposes to increase yellowfin and bigeye tuna minimum size limits to 27 inches (69 cm) according to the curved measurement method. Currently, the ICCAT recommendation on minimum sizes for these species is expressed as 3.2 kg (7 lb), which is equivalent to 22 inches (56 cm). Given the similarity in appearance of juvenile Atlantic tunas, especially bluefin and yellowfin, the 2-year catch of sublegal ABT in 1994 and 1995 comprised 28 percent of the total catch below 47 inches (119 cm). Because of the need to comply with the ICCAT ABT minimum size recommendation of 27 inches (69 cm), NMFS proposes uniform minimum sizes on ABT, yellowfin, and bigeye tuna. This measure should ensure compliance with the ICCAT recommendation on ABT minimum size by facilitating enforcement.

In 1995, NMFS received comment that the ICCAT recommendation on the minimum size for yellowfin tuna does not coincide with age of first spawning and that these fish should have the opportunity to spawn at least once. At the time, NMFS responded that more information is needed on the potential impact for both recreational and commercial sectors, especially the effect on discard rates for yellowfin tuna and an analysis of release mortality. NMFS continues to assess the costs and benefits of the increased minimum size and invites comment relative to management of yellowfin and bigeye

tuna. However, the proposed action is intended to protect juvenile ABT, for which a strict quota management program is already in place.

Request for Comments

Although NMFS is not currently proposing a change in the opening date of the General category fishing season, NMFS has received requests for division of the quota to allow for a General category fishery during the winter months when ABT are present in waters off North Carolina. Comments are sought regarding this issue. Also, NMFS has received numerous comments that the use of aircraft to locate tuna for General category vessels is working against the effort controls previously established. NMFS therefore requests specific comments on ways to mitigate this impact.

Also, under current regulations, a designated restricted fishing day may be waived, or the daily catch limit may be adjusted, if the AA determines that such effort control is impeding attainment of the monthly quota or needed to avert premature closure. However, NMFS has received comment that the 5-day advance notice of such waiver or catch limit adjustment should be reduced to make these adjustments more effective. NMFS, therefore, requests comment on a change to file such notices with the Office of the Federal Register a minimum of 3 calendar days in advance of the effective date.

In addition, NMFS has received two petitions for rulemaking regarding the Atlantic tuna fisheries. Petitioners have requested that NMFS list pair trawl as an authorized gear for tunas other than ABT. Other petitioners have requested that NMFS prohibit retention of ABT smaller than the large medium size class. NMFS requests comment on the merits and impacts of these proposed regulatory changes. Copies of the petitions are available from NMFS (see **ADDRESSES**).

Locations of Public Hearings

The public hearing schedule is as follows:

Monday, May 6, 1996, Silver Spring, MD, 2–5 p.m.

NOAA Building 3, Room 4527, 1315 East-West Highway, Silver Spring, MD 20910

Thursday, May 9, 1996, Boston, MA, 6–10 p.m.

John B. Hynes Veterans Memorial Convention Center, 900 Boylston Street, Boston, MA 02115

Friday, May 10, 1996, Madeira Beach, FL, 6–9 p.m.

City Hall, 300 Municipal Drive, Madeira Beach, FL 33708

Classification

This proposed rule is published under the authority of the ATCA, 16 U.S.C. 971 *et seq.* Preliminarily, the AA has determined that the regulations contained in this proposed rule are necessary to implement the recommendations of ICCAT and are necessary for management of the Atlantic tuna fisheries.

NMFS prepared a draft EA for this proposed rule with a preliminary finding of no significant impact on the human environment. In addition, a draft RIR was prepared with a preliminary finding of no significant impact. The Assistant General Counsel for Legislation and Regulation of the Department of Commerce has certified to the Chief Counsel for Advocacy of the Small Business Administration that the proposed rule would not have a significant economic impact on a substantial number of small entities. For most fishing categories, quotas are proposed at levels similar to prior years. Although the reduction in Incidental category quotas of 28 percent amounts to a significant impact on gross revenues for that sector, the number of vessel operators affected does not exceed 5 percent of the tuna fleet. Thus, an initial Regulatory Flexibility Analysis was not prepared.

This proposed rule has been determined to be not significant for purposes of E.O. 12866.

Notifications of purse seine allocation transfers are not subject to the Paperwork Reduction Act (PRA), because a maximum of five vessels could be subject to reporting under this requirement. Since it is impossible for ten or more respondents to be involved, the notifications are exempt from the PRA clearance requirement.

NMFS issued a biological opinion under the Endangered Species Act on July 5, 1989, indicating that the level of impact and marine mammal takes in the Atlantic tuna fisheries is not likely to jeopardize the continued existence of any sea turtle species or any marine mammal populations. It has been preliminarily determined that additional information on the Atlantic tuna fisheries collected since that time has not changed the conclusion of that consultation.

List of Subjects in 50 CFR Part 285

Fisheries, Fishing, Penalties, Reporting and recordkeeping requirements, Treaties.

Dated: April 19, 1996.

Nancy Foster,

Deputy Assistant Administrator for Fisheries, National Marine Fisheries Service.

For the reasons set out in the preamble, 50 CFR part 285 is proposed to be amended as follows:

PART 285—ATLANTIC TUNA FISHERIES

1. The authority citation for part 285 continues to read as follows:

Authority: 16 U.S.C. 971 *et seq.*

2. In § 285.22, paragraphs (a)(1), (a)(3), (b), (c), (d), (e), and the heading and first sentence of paragraph (f) are revised, to read as follows:

§ 285.22 Quotas.

* * * * *

(a) *General.* (1) The total annual amount of large medium and giant Atlantic bluefin tuna that may be caught, retained, possessed or landed in the regulatory area by vessels permitted in the General category under § 285.21(b) is 541 mt, of which 133 mt are available in the period beginning June 1 and ending July 31; 186 mt are available in the period beginning August 1 and ending August 31; 159 mt are available in the period beginning September 1 and ending September 30; and 63 mt are available beginning October 1.

* * * * *

(3) When the October General category catch is projected to have reached a total of 10 mt less than the overall October quota, the Director will publish a notice in the Federal Register to set aside the remaining quota for an area comprising the waters south and west of a straight line originating at a point on the southern shore of Long Island at 71°51' W. long. (Montauk Point) and running SSE 150° true. The daily catch limit for the set-aside area will be one large medium or giant Atlantic bluefin tuna per vessel per day. Upon the effective date of the set-aside, fishing for, retaining, or landing large medium or giant Atlantic bluefin tuna must cease in all waters outside of the set-aside area.

(b) *Harpoon Boat.* The total annual amount of large medium and giant Atlantic bluefin tuna that may be caught, retained, possessed, or landed in the regulatory area by vessels permitted in the Harpoon Boat category under § 285.21(b) is 53 mt.

(c) *Purse Seine.* The total amount of large medium and giant Atlantic bluefin tuna that may be caught, retained, possessed, or landed in the regulatory area by vessels permitted in the Purse

Seine category under § 285.21(b) is 251 mt.

(d) *Angling.* The total annual amount of Atlantic bluefin tuna that may be caught, retained, possessed, or landed in the regulatory area by anglers is 243 mt. No more than 5 mt of this quota may be large medium or giant bluefin tuna quota. No more than 138 mt of this quota may be school Atlantic bluefin tuna. The quota for school Atlantic bluefin tuna is further subdivided as follows:

(1) 65 mt of school Atlantic bluefin tuna may be caught, retained, possessed, or landed south of 38°47′ N. lat.

(2) 73 mt of school Atlantic bluefin tuna may be caught, retained, possessed, or landed north of 38°47′ N. lat.

(e) *Incidental.* The total annual amount of large medium and giant Atlantic bluefin tuna that may be caught, retained, possessed, or landed in the regulatory area by vessels permitted in the Incidental Catch category under § 285.21(b) is 110 mt. This quota is further subdivided as follows:

(1) 109 mt for longline vessels. No more than 86 mt may be caught, retained, possessed, or landed in the area south of 34°00′ N. lat.

(2) For vessels fishing under § 285.23 (a) and (b), 1 mt may be caught, retained, possessed, or landed in the regulatory area.

(f) *Inseason adjustment amount.* The total amount of Atlantic bluefin tuna that will be held in reserve for inseason adjustments is 108 mt. * * *

* * * * *

3. In § 285.24, paragraph (a)(1) and the first sentence of paragraph (a)(2) are revised to read as follows:

§ 285.24 Catch limits.

(a) *General category.* (1) From the start of each fishing year, except on designated restricted fishing days, only one large medium or giant Atlantic bluefin tuna may be caught and landed per day from a vessel for which a General category permit has been issued under § 285.21. On designated restricted fishing days, persons aboard such vessels may not possess, retain or land any large medium or giant Atlantic bluefin tuna. For calendar year 1996, designated restricted fishing days are: July 14, 15, 16, 21, 22, 23, 28, 29, and 30; August 4, 5, 6, 9, 10, 11, 12, 13, 18, 19, 20, 25, 26, and 27; and September 3, 8, 9, 10, and 15.

(2) The Assistant Administrator may increase or reduce the catch limit over a range from zero (restricted fishing days) to a maximum of three large medium or giant Atlantic bluefin tuna per day per vessel based on a review of dealer reports, daily landing trends, availability of the species on the fishing grounds, and any other relevant factors, to provide for maximum utilization of the quota. * * *

* * * * *

4. In § 285.25, the last sentence of paragraph (c), and paragraph (d)(2) are revised to read as follows:

§ 285.25 Purse seine vessel requirements.

* * * * *

(c) *Inspection.* * * * Purse seine vessel owners must have each large medium and giant bluefin tuna in their catch weighed, measured, and the information recorded on the landing card required under § 285.28(a) at the time of offloading and prior to transporting said tuna from the area of offloading.

(d) *Vessel allocations.* * * *

(2) The Regional Director will review applications for allocations of Atlantic bluefin tuna on or about May 1, and will make equal allocations of the available size classes of Atlantic bluefin tuna among vessel owners so requesting. Such allocations are freely transferable, in whole or in part, among purse seine vessel permit holders. Any purse seine vessel permit holder intending to land bluefin tuna under an allocation transferred from another purse seine vessel permit holder must provide written notice of such intent to the Regional Director 3 days before landing any such bluefin tuna. Such notification must include the transfer date, amount (mt) transferred, and the permit numbers of vessels involved in the transfer. Trip or seasonal catch limits otherwise applicable under § 285.24(c) are not altered by transfers of bluefin tuna allocation. Purse seine vessel permit holders who, through landing and/or transfer, have no remaining bluefin tuna allocation may not use their permitted vessels in any fishery in which Atlantic bluefin tuna might be caught.

* * * * *

5. In § 285.31, paragraph (a)(4) is revised to read as follows:

§ 285.31 Prohibitions.

(a) * * *

(4) Fish for, catch, or possess or retain Atlantic bluefin tuna in excess of the catch limits specified in § 285.24, or to possess or retain large medium or giant ABT on designated restricted fishing days, except that fish may be caught and released under the provisions of § 285.27.

* * * * *

6. In § 285.52, paragraph (a) is revised to read as follows:

§ 285.52 Size limits.

(a) Fishing for, catching, retention, or possession of Atlantic yellowfin and bigeye tunas in the regulatory area by persons aboard fishing vessels subject to the jurisdiction of the United States is authorized only for yellowfin or bigeye tuna measuring 27 inches (69 cm) or more in total curved fork length.

* * * * *

[FR Doc. 96–10247 Filed 4–22–96; 4:21 pm]

BILLING CODE 3510–22–P

Notices

Federal Register
Vol. 61, No. 81
Thursday, April 25, 1996

This section of the FEDERAL REGISTER contains documents other than rules or proposed rules that are applicable to the public. Notices of hearings and investigations, committee meetings, agency decisions and rulings, delegations of authority, filing of petitions and applications and agency statements of organization and functions are examples of documents appearing in this section.

DEPARTMENT OF AGRICULTURE

Submission for OMB Review; Comment Request

April 19, 1996.

The Department of Agriculture has submitted the following information collection requirement(s) to OMB for review and clearance under the Paperwork Reduction Act of 1995, Public Law 104–13. Comments regarding these information collections are best assured of having their full effect if received within 30 days of this notification. Comments should be addressed to: Desk Officer for Agriculture, Office of Information and Regulatory Affairs, Office of Management and Budget (OMB), Washington, D.C. 20503 *and* to Department Clearance Officer, USDA, OIRM, Ag Box 7630, Washington, D.C. 20250–7630. Copies of the submission(s) may be obtained by calling (202) 720–6204 or (202) 720–6746.

- *Title:* Disposal of National Forest Timber—Timber Export and Substitution Restrictions.

Summary: The Forest Resources Conservation and Shortage Relief Act of 1990 provides that each person who acquires, either directly or indirectly, unprocessed timber originating from Federal lands west of the 100th meridian in the contiguous 48 States shall report the receipt and disposition of such timber to the Secretary of Agriculture.

Need and Use of the Information: This information will be used to monitor compliance and for enforcement of the Forest Resources Conservation and Shortage Relief Act of 1990.

Description of Respondents: Business or other for-profit; Federal Government.

Number of Respondents: 3575.

Frequency of Responses: Recordkeeping; Reporting: On occasion, Annually.

Total Burden Hours: 46,234.

Donald E. Hulcher,
Deputy Departmental Clearance Officer.

[FR Doc. 96–10143 Filed 4–24–96; 8:45 am]

BILLING CODE 3410–01–M

Animal and Plant Health Inspection Service

[Docket No. 96–021–1]

Secretary's Advisory Committee on Foreign Animal and Poultry Diseases; Meeting

AGENCY: Animal and Plant Health Inspection Service, USDA.

ACTION: Notice of meeting.

SUMMARY: We are giving notice of a meeting of the Secretary's Advisory Committee on Foreign Animal and Poultry Diseases.

PLACE, DATES, AND TIME OF MEETING: The meeting will be held in Conference Rooms B, C, and D of the USDA Center at Riverside, 4700 River Road, Riverdale, MD. The Committee will meet on May 15–16, 1996. Sessions will be held from 8 a.m. to 5 p.m. on May 15, and from 8 a.m. until noon on May 16.

FOR FURTHER INFORMATION CONTACT: Dr. John Williams, Chief Staff Veterinarian, Emergency Programs, VS, APHIS, Suite 3B08, 4700 River Road Unit 41, Riverdale, MD 20737–1236, (301) 734–8073.

SUPPLEMENTARY INFORMATION: The Secretary's Advisory Committee on Foreign Animal and Poultry Diseases (Committee) advises the Secretary of Agriculture of means to suppress, control, or eradicate an outbreak of foot-and-mouth disease, or other destructive foreign animal or poultry diseases, in the event these diseases should enter the United States. The Committee also advises the Secretary of Agriculture on prevention of these diseases.

The meeting will focus on emergency preparedness and will be open to the public. However, due to time constraints, the public will not be allowed to participate in the Committee's discussions. Written statements concerning the meeting topic may be filed with the Committee before or after the meeting by sending them to Dr. John Williams at the address listed under FOR FURTHER INFORMATION CONTACT.

This notice of meeting is given pursuant to section 10 of the Federal Advisory Committee Act.

Done in Washington, DC, this 19th day of April 1996.

Terry L. Medley,
Acting Administrator, Animal and Plant Health Inspection Service.

[FR Doc. 96–10259 Filed 4–24–96; 8:45 am]

BILLING CODE 3410–34–P

Rural Housing Service

Notice of Request for Extension of a Currently Approved Information Collection

AGENCY: Rural Housing Service, USDA.

ACTION: Proposed collection; comments request.

SUMMARY: In accordance with the Paperwork Reduction Act of 1995, this notice announces the Rural Housing Service's (RHS) intention to request an extension for the currently approved information collection in support of the Community Programs Guaranteed Loans.

DATES: Written comments must be received by June 24, 1996 to be assured of consideration.

FOR FURTHER INFORMATION CONTACT: Melvin R. Padgett, Community Programs Senior Loan Specialist, RHS, USDA, Ag. Box 3222, Washington, DC 20250–3222, Telephone (202) 720–1495.

SUPPLEMENTARY INFORMATION:

Title: Community Programs Guaranteed Loans.

OMB Number: 0575–0137.

Expiration Date of Approval: September 30, 1996.

Type of Request: Extension of a currently approved information collection.

Abstract: The Community Programs (CP) loan program was authorized by the Rural Development Act of 1972. RHS was authorized to guarantee CP loans by Pub.L. 101–161 enacted November 21, 1989. The loans are made by private lenders to public bodies and non-profit corporations for the purpose of improving rural living standards and for other purposes that create employment opportunities in rural areas. Eligibility for this program includes community facilities located in cities of up to 20,000 population, and water and waste disposal facilities

located in cities of up to 10,000 population.

Since 1990, more than 160 community facilities have received loans totaling nearly $146 million guaranteed through the CP program.

These loans can be made for a variety of purposes including healthcare, public buildings and improvements, fire and rescue, easements, or buildings; purchase of equipment, machinery, or supplies; repair and modernization; pollution control; transportation services; start up and working capital; and feasibility studies. The rate and terms of the loan are negotiated between the applicant and the lender. The information collected is used by RHS to manage, plan, evaluate and account for Government resources. The reports are required to ensure the proper and judicious use of public funds.

Estimate of Burden: Public reporting burden for this collection of information is estimated to average 16.24 hours per response.

Respondents: Non-profit corporations and public bodies.

Estimated Number of Respondents: 175.

Estimated Number of Responses Per Respondent: 7.74.

Estimated Total Annual Burden on Respondents: 22,012 hours.

Copies of this information can be obtained from the Director, Regulations and Paperwork Management Division, at (202) 720–9725.

Comments

Comments are invited on (a) whether the proposed collection of information is necessary for the proper performance of the functions of the agency, including whether the information will have practical utility; (b) the accuracy of the agency's estimate of the burden of the proposed collection of information including the validity of the methodology and assumptions used; (c) ways to enhance the quality, utility and clarity of the information to be collected; and (d) ways to minimize the burden of the collection of information on those who are to respond, including through the use of appropriate automated, electronic, mechanical, or other technological collection techniques or other forms of information technology. Comments should be sent to the Director, Regulation and Paperwork Management Division, U.S. Department of Agriculture, RECD, Ag. Box 0743, Washington, DC 20250. All comments will be summarized and included in the request for OMB approval. All comments will also become a matter of public record.

Dated: April 15, 1996.

Jan E. Shadburn,

Acting Administrator,

[FR Doc. 96–10026 Filed 4–24–96; 8:45 am]

BILLING CODE 3410–32–U

Forest Service

Eastern Roosevelt Lake Watershed Analysis Area, Tonto National Forest, Gila County, Arizona

AGENCY: Forest Service, USDA.

ACTION: Notice of intent to prepare an environmental impact statement.

SUMMARY: The USDA, Forest Service will prepare an environmental impact statement (EIS) for the Eastern Roosevelt Lake Watershed Analysis Area (ERLWAA) to develop grazing strategies with associated range improvements for the following grazing allotments: Armer Mountain, A Cross, Dagger, Poison Springs and Sierra Ancha. The ERLWAA project area is located approximately 9 miles east of Theodore Roosevelt Lake Dam, Roosevelt, Arizona. The allotments are further identified by the following legal description:

Armer Mountain Allotment—31,702 Acres

All or part of sections 34–36 of T 7 N, R 13 E; sections 1–3 and 8–35 of T 6 N, R 13 E; sections 24–26, 35, and 36 of T 6 N, R 12 E; sections 1, 2, and 12 of T 5 N, R 12 E; sections 2–10, 15–18, 20–22, 28, 29, and 32–34 of T 5 N, R 13 E; and sections 3–5, 7–10, 15–18, 20–22, and 27–29 of T 4 N, R 13 E; Gila and Salt River Base and Meridian (Appendix C–1).

A Cross Allotment—35,894 Acres

All or part of sections 34–36 of T 7 N, R 13 E; sections 31 and 32 of T 7 N, R 14 E; sections 1, 2, 12, 13, 24–26, 35, and 36 of T 6 N, R 13 E; sections 5–9 and 15–21 and 28–34 of T 6 N, R 14 E; sections 1–3, 10–15, 21–28, and 34–36 of T 5 N, R 13 E; sections 3–8, 16–20, and 29–31 of T 5 N, R 14 E; sections 1–3, 10–15, 22–24, 26, and 27 T 4 N, R 13 E; and sections 6 and 7 of T 4 N, R 14 E; Gila and Salt River Base and Meridian (Appendix C–2).

Dagger Allotment—33,933 Acres

All or part of sections 26, 34, 35, and 36 of T 6 N, R 15 E; sections 24–27 and 34–36 of T 5 N, R 14 E; sections 1–3, 9–16, and 19–36 of T 5 N, R 15 E; section 35 of T 5 N, R 16 E; sections 1 and 2 of T 4 N, R 14 E; sections 1–6, 8–17, 21–28, and 33–35 of T 4 N, R 15 E; sections 2, 3, 10, 11, 14, 15, 22, and 23 of T 4 N, R 16 E; and section 2 of T 3 N, R 15 E; Gila and Salt River Base and Meridian (Appendix C–3).

Poison Springs Allotment—43,529 Acres

All or part of sections 34 and 35 of T 5 N, R 14 E; sections 5–9, 16–21, and 28–32 of T 4 N, R 15 E; sections 1–3, 9–16, and 20–36 of T 4 N, R 14 E; sections 35 and 36 of T 4 N, R 13 E; sections 2–11, 14–23, and 26–36 of T 3 N, R 14 E; sections 1, 2, 11–14, 23–26 ,35, and 36 of T 3 N, R 13 E; sections 3–9 and 17 of T 2 N, R 14 E; and section 1 of T 2 N, R 13 E; Gila and Salt River Base and Meridian (Appendix C–4).

Sierra Ancha Allotment—22,099 Acres

All or part of sections 15–17, 20–22, 26–29 and 32–35 of T 6 N, R 14 E; sections 6, 7, 18, and 19 of T 5 N, R 15 E; sections 1–5, 8–17, and 20–34 of T 5 N, R 14 E; sections 2–10, 16–21 and 29–31 of T 4 N, R 14 E; and sections 1, 12, 13, and 24–26 of T 4 N, R 13 E; Gila and Salt River Base and Meridian (Appendix C–5).

The purpose of the EIS will be to develop and evaluate a range of alternatives for grazing strategies and associated range improvements. The alternatives will include a no action alternative, involving no new range improvements or changes to the current grazing strategy for each allotment, and additional alternatives to respond to issues generated during the scoping process.

ADDRESSES: Submit written comments to Linny Warren, Range/Watershed/Soils Staff Officer, Tonto Basin Ranger District, HC02 Box 4800, Roosevelt, Arizona 85545.

RESPONSIBLE OFFICIAL: The responsible official who will make the decision regarding this project is Dennis P. Roy, District Ranger, Tonto Basin Ranger District, HC02 Box 4800, Roosevelt, Arizona 85545, (520) 467–3200. He will decide under what circumstances the grazing operation will continue.

FOR FURTHER INFORMATION CONTACT: Direct question about the proposed action, public scoping, and the environmental impact statement to Linny Warren (520) 467–3200.

SUPPLEMENTARY INFORMATION: The Eastern Roosevelt Lake Watershed Analysis Area (ERLWAA) encompasses over 167,150 acres and contains five grazing allotments, which are: Armer Mountain, A Cross, Dagger, Poison Spring, and Sierra Ancha. The Forest Service's proposed management will employ 4 grazing systems for 3 cow/calf and yearling operations. Each grazing system will employ a rest-rotation scheme of use. Growing season rest requirements of the plants will dictate how each pasture will be utilized in the rotation scheme of use.

There are three designated Wilderness Areas wholly or partially within the ERLWAA. These are the Salome

Wilderness (7,852 acres), the Sierra Ancha Wilderness (20,850 acres) and the Salt River Canyon Wilderness (9,777 acres). The Sierra Ancha Experimental Forest is 13,371 acres in size. It occurs on the A Cross and Sierra Ancha allotments. Currently, the Tonto National Forest's Land Management Plan has listed livestock use in the Experimental Forest as Level A; No Grazing. On June 29, 1994, a wildfire was started by a lightning strike near Armer Mountain. This fire burned portions of the Armer Mountain and A Cross allotments. A total of 5,760 acres was burned. Depending on the recovery of the vegetation on each of the allotments, some priorities may need to be shifted in the future. The Fish and Wildlife Service's Amendment to the Fish and Wildlife Coordination Act Report on Plan 6, Central Arizona, Regulatory Storage Division was prepared as a mitigation plan designed to mitigate impacts on fish and wildlife resources associated with construction and operation of Plan 6. In this report it states, ''In order to control access to the lake by livestock and reduce impacts to native vegetation associated with uncontrolled grazing, funding should be provided to accelerate the implementation of new and revised Allotment Management Plans for 11 allotments around Roosevelt Lake. * * * This funding should be utilized for the construction of range management fencing and water development which should provide for management designed to meet vegetative objectives and provide appropriate use by livestock so that established objectives could be met.'' The Armer Mountain, A Cross, Poison Springs, and Sierra Ancha Allotments were listed as part of those 11 allotments. An environmental assessment was prepared in December, 1995 for the Eastern Roosevelt Lake Watershed Analysis Area. Based on that assessment, it was determined that additional analyses for this project were required, and that an environmental impact statement would be prepared.

The draft EIS is expected to be filed with the EPA and to be available for public review by July, 1996. At that time, copies of the draft EIS will be distributed to interested and affected agencies, organizations, and members of the public for review and comment. The EPA will publish a Notice of Availability of the draft EIS in the Federal Register. The comment period on the EIS will be 45 days from the date the EPA publishes the Notice of Availability. It is very important that those interested in this proposed action participate at that time. To be most helpful, comments on the draft EIS should be as specific as possible and may address the adequacy of the statement or the merits of the alternatives discussed (see The Council on Environmental Quality Regulations for implementing the procedural provisions of the National Environmental Policy Act at 40 CFR 1503.3).

In addition, Federal court decisions have established that reviewers of a draft EIS must structure their participation in the environmental review of the proposal so that it is meaningful and alerts an agency to the reviewer's position and contentions. *Vermont Yankee Nuclear Power Corp.* versus *NRDC*, 435 U.S. 519, 553 (1978). Environmental objections that could have been raised at the draft stage may be waived it not raised until after completion of the final EIS. *City of Angoon* versus *Hodel*, (9th Circuit, 1986) and *Wisconsin Heritages, Inc.* versus *Harris*, 490 F. Supp. 1334, 1338 (E.D. Wis. 1980). The reason for this is to ensure that substantive comments and objections are made available to the Forest Service at a time when it can meaningfully consider them and respond to them in the final EIS.

The final EIS is scheduled to be completed by October, 1996. In the final EIS, the Forest Service is required to respond to comments received during the comment period. The responsible official will consider the comments, responses, environmental consequences disclosed in the final EIS, and applicable laws, regulations, and policies in making a decision regarding this proposal. He will document the decision and reasons for the decision in the Record of Decision. The Record of Decision will be prepared and filed with the final EIS. That decision will be subject to Forest Service appeal regulations (36 CFR 217).

Dated: April 12, 1996.

Robert Dunblazier,

Group Leader for Social Resources.

[FR Doc. 96–9951 Filed 4–24–96; 8:45 am]

BILLING CODE 3410–11–M

COMMISSION ON CIVIL RIGHTS

Agenda and Notice of Public Meeting of the Missouri Advisory Committee

Notice is hereby given, pursuant to the provisions of the rules and regulations of the U.S. Commission on Civil Rights, that a meeting of the Missouri Advisory Committee to the Commission will convene at 6:00 p.m. and adjourn at 8:30 p.m. on May 30, 1996, at the Hyatt Regency Hotel, 2345 McGee Street, Kansas City, Missouri 64108. The purpose of the meeting is to plan future projects and hold orientation for new members.

Persons desiring additional information, or planning a presentation to the Committee, should contact Melvin L. Jenkins, Director of the Central Regional Office, 913–551–1400 (TDD 913–551–1414). Hearing-impaired persons who will attend the meeting and require the services of a sign language interpreter should contact the Regional Office at least five (5) working days before the scheduled date of the meeting.

The meeting will be conducted pursuant to the provisions of the rules and regulations of the Commission.

Dated at Washington, DC, April 17, 1996.

Carol-Lee Hurley,

Chief, Regional Programs Coordination Unit.

[FR Doc. 96–10150 Filed 4–24–96; 8:45 am]

BILLING CODE 6335–01–P

Agenda and Notice of Public Meeting of the North Dakota Advisory Committee

Notice is hereby given, pursuant to the provisions of the rules and regulations of the U.S. Commission on Civil Rights, that a meeting of the North Dakota Advisory Committee to the Commission will convene at 9:00 a.m. and adjourn at 9:00 p.m. on May 16, 1996, at the Holiday Inn, 605 E. Broadway, Bismarck, North Dakota 58501. The purpose of the meeting is to receive information on civil rights enforcement in North Dakota.

Persons desiring additional information, or planning a presentation to the Committee, should contact Committee Chairperson Betty Mills, 701–223–4643, or John Dulles, Director of the Rocky Mountain Regional Office, 303–866–1400 (TDD 303–866–1049). Hearing-impaired persons who will attend the meeting and require the services of a sign language interpreter should contact the Regional Office at least five (5) working days before the scheduled date of the meeting.

The meeting will be conducted pursuant to the provisions of the rules and regulations of the Commission.

Dated at Washington, DC, April 17, 1996.

Carol-Lee Hurley,

Chief, Regional Programs Coordination Unit.

[FR Doc. 96–10151 Filed 4–24–96; 8:45 am]

BILLING CODE 6335–01–P

DEPARTMENT OF COMMERCE

Bureau of the Census

1997 Economic Census Covering Construction Industry Sector

ACTION: Proposed agency information collection activity; comment request.

SUMMARY: The Department of Commerce, as part of its continuing effort to reduce paperwork and respondent burden, invites the general public and other Federal agencies to take this opportunity to comment on proposed and/or continuing information collections, as required by the Paperwork Reduction Act of 1995, Public Law 104–13 (44 U.S.C. 3506(c)(2)(A)).

DATES: Written comments must be submitted on or before June 24, 1996.

ADDRESSES: Direct all written comments to Linda Engelmeier, Acting Departmental Forms Clearance Officer, Department of Commerce, Room 5327, 14th and Constitution Avenue NW., Washington, DC 20230.

FOR FURTHER INFORMATION CONTACT: Requests for additional information or copies of the information collection instrument(s) and instructions should be directed to Patricia L. Horning, Bureau of the Census, Room 2125, Building 4, Washington, DC 20233 on (301) 457–4680.

SUPPLEMENTARY INFORMATION:

I. Abstract

The Census Bureau is the preeminent collector and provider of timely, relevant and quality data about the people and economy of the United States. Economic data are the Census Bureau's primary program commitment during nondecennial census years. The economic census, conducted under authority of Title 13 U.S.C., is the primary source of facts about the structure and functioning of the Nation's economy and features unique industry and geographic detail. Economic census statistics serve as part of the framework for the national accounts and provide essential information for government, business and the general public. The 1997 Economic Census will cover virtually every sector of the U.S. economy including more than 2.3 million construction establishments.

II. Method of Collection

The construction industry sector of the economic census will select establishments for their mail canvasses from a frame given by the Census Bureau's Standard Statistical Establishment List. To be eligible for selection, an establishment will be required to satisfy the following conditions: (i) It must be classified in the construction industry sector; (ii) it must be an active operating establishment of a multi-establishment firm, or it must be a single-establishment firm with payroll; and (iii) it must be located in one of the 50 states or the District of Columbia. Mail selection procedures will distinguish the following groups of establishments:

A. Establishments of Multi-Establishment Firms

Selection procedures will assign all active construction establishments of multi-establishment firms to the mail component of the potential respondent universe. We estimate that the census mail canvass for 1997 will include approximately 11,000 construction establishment firms.

B. Single-Establishment Firms With Payroll

As an initial step in the selection process, we will conduct a study of the potential respondent universe for construction industries. The study of potential respondents will produce payroll cutoffs that we will use to distinguish large versus small single-establishment firms within each industry or kind of business. This payroll size distinction will affect selection as follows:

1. Large Single-Establishment Firms

Selection procedures will assign large single-establishment firms having annualized payroll (from Federal administrative records) that equals or exceeds the cutoff for their industry to the mail component of the potential respondent universe. We estimate that the census mail canvass for 1997 will include approximately 20,000 construction firms in this category.

2. Small Single-Establishment Firms

Selection procedures will assign a sample of small single-establishment firms having annualized payroll below the cutoff for their industry to the mail component of the potential respondent universe. Sampling strata and corresponding probabilities of selection will be determined by a study of the potential respondent universe conducted shortly before mail selection operations begin. We estimate that the census mail canvass for 1997 will include approximately 99,000 construction firms in this category.

C. Establishments With No Payroll

All establishments with no payroll will be represented in the census by data from Federal administrative records.

III. Data

The information collected from businesses in these sectors of the economic census will produce basic statistics by industry for number of establishments, value of construction work done, payroll, employment, selected costs, depreciable assets, and capital expenditures. It also will yield a variety of subject statistics, including estimates of type of construction work done, kind of business activity and other industry-specific measures.

OMB Number: Not Available.

Form Number: The forms used to collect information from businesses in this sector of the economic census are tailored to specific business practices and are too numerous to list separately in this notice. You can obtain information on the proposed content of the forms by calling Patricia L. Horning on (301) 457–4680.

Type of Review: Regular Review.

Affected Public: Businesses or Other for Profit, Non-profit Institutions, Small Businesses or Organizations, and State or Local Governments.

Estimated Number of Respondents: 130,000.

Estimated Time Per Response: 2.2 hrs.

Estimated Total Annual Burden Hours: 286,000.

Estimated Total Annual Cost: The cost to the government for this work is included in the total cost of the 1997 Economic Census, estimated to be $224 million.

IV. Request for Comments

Comments are invited on: (a) Whether the proposed collection of information is necessary for the proper performance of the functions of the agency, including whether the information shall have practical utility; (b) the accuracy of the agency's estimate of the burden (including hours and cost) of the proposed collection of information; (c) ways to enhance the quality, utility, and clarity of the information to be collected; and (d) ways to minimize the burden of the collection of information on respondents, including through the use of automated collection techniques or other forms of information technology.

Comments submitted in response to this notice will be summarized and/or included in the request for OMB approval of this information collection; they also will become a matter of public record.

Dated: April 18, 1996.

Linda Engelmeier,

Acting Departmental Forms Clearance Officer, Office of Management and Organization.

[FR Doc. 96–10115 Filed 4–24–96; 8:45 am]

BILLING CODE 3510–07–P

Foreign-Trade Zones Board

[Docket 31–96]

Foreign-Trade Zone 98—Birmingham, AL; Application for Subzone Status, ZF Industries, Inc. (Automotive Axle Assemblies), Tuscaloosa, Alabama

An application has been submitted to the Foreign-Trade Zones Board (the Board) by the City of Birmingham, Alabama, grantee of FTZ 98, requesting special-purpose subzone status for the automotive axle assembly manufacturing plant of ZF Industries, Inc. (ZF) (subsidiary of ZF Friedrichshafen AG, Germany), located in Tuscaloosa, Alabama. The application was submitted pursuant to the provisions of the Foreign-Trade Zones Act, as amended (19 U.S.C. 81a–81u), and the regulations of the Board (15 CFR Part 400). It was formally filed on April 16, 1996.

The new ZF plant (34 acres, 83,000 sq.ft.), currently under construction, is located at 1200 Commerce Drive within the Tuscaloosa County Airport Industrial Park, about 4 miles west of the City of Tuscaloosa. The facility (200 employees) will be used to produce front and rear axle assemblies for passenger vehicles manufactured at the Mercedes-Benz motor vehicle assembly plant in Tuscaloosa County, as well as for export. The application indicates that, at the outset, foreign-sourced parts and materials will comprise some 25 percent of the finished axle assemblies' material value, including: pinion sets, steering gears, tie rods, parking brake cables, and fasteners (duty rate range: 2.9–12.5%). Foreign (non-North American) parts and materials purchases are projected to decline to about 14 percent of the total in the medium term.

Zone procedures would exempt ZF from Customs duty payments on the foreign items used in production for export. On domestic shipments transferred in-bond to the Mercedes-Benz plant (Subzone 98A, Board Order 803, 61 FR 8237, 3–4–96), no duties would be paid on foreign-origin components of the axle assemblies until Mercedes enters the finished motor vehicles for domestic consumption, at which time, Mercedes could choose to apply the finished auto duty rate (2.5%). Mercedes would pay no duties on its exports. For axle assemblies withdrawn for Customs entry, the company would be able to choose the axle duty rate (2.9%) for the foreign-origin fasteners noted above. The application indicates that the savings from zone procedures would help improve the plant's international competitiveness.

In accordance with the Board's regulations, a member of the FTZ Staff has been designated examiner to investigate the application and report to the Board.

Public comment on the application is invited from interested parties. Submissions (original and three copies) shall be addressed to the Board's Executive Secretary at the address below. The closing period for their receipt is June 24, 1996. Rebuttal comments in response to material submitted during the foregoing period may be submitted during the subsequent 15-day period (to July 9, 1996).

A copy of the application and the accompanying exhibits will be available for public inspection at each of the following locations:

U.S. Department of Commerce District Office, Medical Forum Building, 7th Floor, 950 22nd Street North, Birmingham, AL 35203.

Office of the Executive Secretary, Foreign-Trade Zones Board, U.S. Department of Commerce, Room 3716, 14th Street & Pennsylvania Avenue, NW., Washington, DC 20230.

Dated: April 17, 1996.

John J. Da Ponte, Jr.,

Executive Secretary.

[FR Doc. 96–10110 Filed 4–25–96; 8:45 am]

BILLING CODE 3510–DS–P

International Trade Administration

[A–351–806]

Silicon Metal from Brazil; Antidumping Duty Administrative Review; Time Limits

AGENCY: Import Administration, International Trade Administration, Department of Commerce.

ACTION: Notice of extension of time limits.

SUMMARY: The Department of Commerce (the Department) is extending the time limits of the preliminary and final results of the fourth administrative review of the antidumping duty order on silicon metal from Brazil. The review covers five manufacturers/exporters of the subject merchandise to the United States and the period July 1, 1994, through June 30, 1995.

EFFECTIVE DATE: April 25, 1996.

FOR FURTHER INFORMATION CONTACT: Fred Baker or John Kugelman, Office of Antidumping Compliance, Import Administration, International Trade Administration, U.S. Department of Commerce, 14th Street and Constitution Avenue, N.W., Washington, D.C. 20230; telephone: (202) 482–5253.

SUPPLEMENTARY INFORMATION: Because it is not practicable to complete this review within the normal time frame, the Department is extending the time limits for completion of the preliminary results until July 29, 1996, in accordance with section 751(a)(3)(A) of the Trade and Tariff Act of 1930, as amended by the Uruguay Round Agreements Act of 1994. We will issue our final results for this review by December 5, 1996.

These extensions are in accordance with section 751(a)(3)(A) of the Tariff Act of 1930, as amended (19 U.S.C. § 1675(a)(3)(A)).

Dated: April 17, 1996.

Joseph A. Spetrini,

Deputy Assistant Secretary for Compliance.

[FR Doc. 96–10114 Filed 4–24–96; 8:45 am]

BILLING CODE 3510–DS–P

[A–549–502]

Certain Circular Welded Carbon Steel Pipes and Tubes from Thailand; Amended Final Results of Antidumping Duty Administrative Review

AGENCY: Import Administration, International Trade Administration, Department of Commerce.

ACTION: Notice of amended final results of antidumping duty administrative review.

SUMMARY: On January 19, 1996, the Department of Commerce (the Department) published the final results of its administrative review of the antidumping duty order on certain circular welded carbon steel pipes and tubes from Thailand (61 FR 1328). On February 2, 1996, Saha Thai Steel Pipe Co., Ltd. (Saha Thai), the sole respondent covered by this review, filed a timely allegation of clerical error regarding calculation of the cash deposit rate. Petitioners filed a timely reply to respondent's clerical error allegation on February 9, 1996. Upon review of these submissions, we have determined that the Department made a clerical error when it stated in the final results that ''the countervailing duty review for the period January 1, 1993, through December 31, 1993, has not yet been completed.'' *Id.* at 1338. It is because of

this clerical error that the Department did not adjust United States price (USP) pursuant to section 772 (d)(1)(D) of the Tariff Act of 1930, as amended (the Act) for countervailing duties attributable to export subsidies imposed on the subject merchandise. We are publishing this amendment to the final results of review in accordance with 19 CFR 353.28(c).

EFFECTIVE DATE: April 25, 1996.

FOR FURTHER INFORMATION CONTACT: Joseph Hanley or Zev Primor, Office of Antidumping Compliance, International Trade Administration, U.S. Department of Commerce, Washington, D.C. 20230; telephone (202) 482–3058/4114.

SUPPLEMENTARY INFORMATION:

Background

The Department published the order on certain circular welded carbon steel pipes and tubes from Thailand on March 11, 1986 (51 FR 8341). The Department published the preliminary results of this review on November 22, 1994 (59 FR 60128), and the final results of review on January 19, 1996 (61 FR 1328).

Applicable Statute and Regulations

Unless otherwise indicated, all citations to the statute and the Department's regulations are in reference to the provisions as they existed on December 31, 1994.

Scope of the Review

The products covered by this administrative review are shipments of certain circular welded carbon steel pipes and tubes from Thailand. The subject merchandise has an outside diameter of 0.375 inches or more, but not exceeding 16 inches. These products, which are commonly referred to in the industry as ''standard pipe'' or ''structural tubing,'' are hereinafter designated as ''pipe and tube.'' The merchandise is classifiable under the Harmonized Tariff Schedule (HTS) item numbers 7306.30.1000, 7306.30.5025, 7306.30.5032, 7306.30.5040, 7306.30.5055, 7306.30.5085, and 7306.30.5090. The item numbers are provided for convenience and U.S. Customs Service purposes. The written description remains dispositive as to the scope of the order.

The review period is March 1, 1992, through February 28, 1993. This review involves one company, Saha Thai Steel Pipe Company, Ltd. (Saha Thai).

Ministerial Error in Final Results of Review

Saha Thai alleges that the Department committed a clerical error by failing to recognize that both countervailing duty reviews (1992 and 1993) that cover the antidumping period of review (March 1, 1992 through February 28, 1993) were completed prior to the completion of this review. As a result, Saha Thai alleges, the Department had the information to adjust USP (pursuant to section 772(d)(1)(D) of the Act) to account for countervailing duties in its margin calculations prior to issuing the antidumping final results, but failed to do so.

Petitioners agree that the Department committed an error by stating that the 1993 countervailing duty review had yet to be completed. However, petitioners claim that the Department clearly stated in its final results that the U.S. Customs Service would adjust the antidumping duty cash deposit rate established in this review by the current countervailing duty cash deposit rate in effect at the time entries are made. Therefore, petitioners claim that this is a methodological rather than clerical issue, and oppose any adjustment to USP for countervailing duties imposed.

We agree with Saha Thai that the Department made a clerical error in its final results by stating that ''the countervailing duty review for the period January 1, 1993, through December 31, 1993 has not yet been completed'' (61 FR 1338). In fact the final results of the 1993 countervailing duty review were published in the Federal Register on August 23, 1995 (60 FR 43773). Therefore, at the time it issued the final results of this review on January 19, 1996, the Department had the information necessary to adjust USP upward for countervailing duties attributable to export subsidies imposed on the merchandise as required by section 772(d)(1)(D) of the Act.

Further, we disagree with petitioners that this is a methodological issue. The Department's unintentional error was clearly a ministerial one within the meaning of section 353.28(d) of the Department's regulations. 19 CFR 353.28(d). The statute clearly instructs the Department to adjust USP for countervailing duties imposed on merchandise subject to an antidumping duty review that are attributable to export subsidies. In this review the Department mistakenly concluded that it did not have the complete information to make such an adjustment, and therefore stated that it would instruct the U.S. Customs Service to adjust the antidumping duty cash deposit rate by the countervailing duty rate currently in effect. Because it is now clear that the information necessary to make the adjustment was available before completion of the final results, failure to make the adjustment is a clerical error.

Final Results of Review

Based upon correction of the ministerial error described above, we determine that a margin of 17.28 percent exists for Saha Thai for the period March 1, 1992, through February 28, 1993.

The Department shall determine, and the U.S. Customs Service shall assess, antidumping duties on all appropriate entries. Individual differences between USP and FMV may vary from the percentage stated above. The Department will issue appraisement instructions directly to the U.S. Customs Service.

Furthermore, the following deposit requirements will be effective upon publication of these final results of administrative review for all shipments of pipe and tube from Thailand entered, or withdrawn from warehouse, for consumption on or after the publication date, as provided by section 751(a)(1) of the Act, and will remain in effect until the final results of the next administrative review: (1) the cash deposit rate for Saha Thai will be 17.28 percent; (2) for previously investigated companies not named above, the cash deposit will continue to be the company-specific rate published for the most recent period; (3) if the exporter is not a firm covered in this review, or the original investigation, but the manufacturer is, the cash deposit rate will be the rate established for the most recent period for the manufacturer of the merchandise; and (4) the cash deposit rate for all other manufacturers or exporters will be the ''all others'' rate established in the final notice of the less-than-fair-value (LTFV) investigation of this case, in accordance with the U.S. Court of International Trade's decisions in *Floral Trade Council* v. *United States*, 822 F. Supp. 766 (CIT 1993) and *Federal Mogul Corporation and Torrington Company* v. *United States*, 822 F. Supp. 782 (CIT 1993). The all others rate is 15.67 percent. These deposit requirements when imposed, shall remain in effect until publication of the final results of the next administrative review.

This notice serves as a final reminder to importers of their responsibility under 19 CFR 353.26 to file a certificate regarding the reimbursement of antidumping duties prior to liquidation of the relevant entries during this review period. Failure to comply with this requirement could result in the Secretary's presumption that reimbursement of antidumping duties occurred and the subsequent assessment of double antidumping duties.

This notice also serves as a reminder to parties subject to administrative protective order (APO) of their responsibility concerning the disposition of proprietary information disclosed under APO in accordance with 19 CFR 353.34(d). Timely written notification of return/destruction of APO materials or conversion to judicial protective order is hereby requested. Failure to comply with the regulations and the terms of an APO is a sanctionable violation.

This amendment of final results of review and notice are in accordance with section 751(e) of the Tariff Act (19 U.S.C. 1675(e)) and 19 CFR 353.28(c).

Dated: April 11, 1996.

Susan G. Esserman,

Assistant Secretary for Import Administration.

[FR Doc. 96–10113 Filed 4–24–96; 8:45 am]

BILLING CODE 3510–DS–P

[A–201–820]

Initiation of Antidumping Duty Investigation: Fresh Tomatoes From Mexico

AGENCY: Import Administration, International Trade Administration, Department of Commerce.

EFFECTIVE DATE: April 25, 1996.

FOR FURTHER INFORMATION CONTACT: John Brinkmann at (202) 482–5288 or Michelle Frederick at (202) 482–0186, Office of Antidumping Investigations, Import Administration, International Trade Administration, U.S. Department of Commerce, 14th Street and Constitution Avenue, N.W., Washington, DC 20230.

Initiation of Investigation

The Applicable Statute

Unless otherwise indicated, all citations to the statute are references to the provisions effective January 1, 1995, the effective date of the amendments made to the Tariff Act of 1930 (the Act) by the Uruguay Round Agreements Act (URAA).

The Petition

Pursuant to 19 CFR 353.12(c), an antidumping duty petition must be filed at the Department of Commerce (the Department) and the U.S. International Trade Commission (ITC) on the same day. In this instance, the ITC does not consider the petition covering fresh tomatoes from Mexico to have been filed until April 1, 1996. As such, the Department considers the petition as having been filed in proper form on April 1, 1996, not March 29, 1996.

The petitioners filed supplements to the petition, including an amended list of petitioners, on April 11 and 17, 1996. The petitioners in this investigation are: the Florida Tomato Growers Exchange; the Florida Tomato Exchange; the Tomato Committee of the Florida Fruit and Vegetable Association; the South Carolina Tomato Association; the Gadsden County Tomato Growers Association; and an Ad Hoc Group of Florida, California, Georgia, Pennsylvania, South Carolina, and Virginia Tomato Growers, as detailed in Exhibit 5 of the April 11, 1996, supplement.

In accordance with section 732(b) of the Act, the petitioners allege that imports of fresh tomatoes from Mexico are being, or are likely to be, sold in the United States at less than fair value within the meaning of section 731 of the Act, and that such imports are materially injuring, or threatening material injury to, a U.S. industry.

The petitioners state that they have standing to file the petition because they are interested parties as defined under section 771(9)(C) of the Act.

Determination of Industry Support for the Petition

Section 732(c)(4)(A) of the Act requires that the Department determine, prior to the initiation of an investigation, that a minimum percentage of the domestic industry supports an antidumping petition. A petition meets these minimum requirements if the domestic producers or workers who support the petition account for (1) at least 25 percent of the total production of the domestic like product; and (2) more than 50 percent of the production of the domestic like product produced by that portion of the industry expressing support for, or opposition to, the petition.

One producer has informed the Department that it takes no position regarding this antidumping petition and a second producer has stated that it opposes the petition. On April 16, 1996, we received a letter on behalf of the Confederacion de Asociaciones Agricolas de Estado de Sinaloa (CAADES), an association of producers of fresh tomatoes in Mexico. The CAADES objections focus on the level of individual supporters of the petition and did not address the support of the Florida and South Carolina trade associations.

Our review of the production data provided in the petition and other information readily available to the Department indicates that the petitioners and supporters of the petition account for more than 50 percent of the total production of the domestic like product, thus meeting the standard of 732(c)(4)(A) and requiring no further action by the Department pursuant to 732(c)(4)(D). Accordingly, the Department determines that the petition is supported by the domestic industry.

Several supporters of the petition did not agree to release their identities to the public. The production data of these supporters was not necessary to establish that the petitioners account for more than 50 percent of the total production of the domestic like product. For this reason, we are not determining whether to consider non-public supporters of a petition in establishing industry support.

Scope of the Investigation

The products covered by this investigation are all fresh or chilled tomatoes (fresh tomatoes) except for those tomatoes which are for processing. For purposes of this investigation, processing is defined to include preserving by any commercial process, such as canning, dehydrating, drying or the addition of chemical substances, or converting the tomato product into juices, sauces or purees. Further, imports of fresh tomatoes for processing are accompanied by an ''Importer's Exempt Commodity Form'' (FV–6) (within the meaning of 7 CFR section 980.501(a)(2) and 980.212(i)). Fresh tomatoes that are imported for cutting up, not further processed (*e.g.*, tomatoes used in the preparation of fresh salsa or salad bars), and not accompanied by an FV–6 form are covered by the scope of this investigation.

All commercially-grown tomatoes sold in the United States, both for the fresh market and for processing, are classified as *Lycopersicon esculentum*. Important commercial varieties of fresh tomatoes include common round, cherry, plum, and pear tomatoes.

Tomatoes imported from Mexico covered by this investigation are classified under the following subheadings of the Harmonized Tariff Schedules of the United States (HTS), according to the season of importation: 0702.00.20, 0702.00.40, 0702.00.60, and 9906.07.01 through 9906.07.09. Although the HTS numbers are provided for convenience and Customs purposes, our written description of the scope of this proceeding is dispositive.

Export Price and Normal Value

The petitioners based export prices on prices published by the U.S. Department of Agriculture (USDA) Marketing Service. These prices represented packed, F.O.B. shipping point prices,

duties, and border crossing charges paid for mature green, vine ripe, and plum tomatoes of various sizes imported from Mexico through Nogales, Arizona. The petitioners made deductions to export price for movement expenses and commissions. They provided additional export price calculations incorporating adjustments for ''backbilling'' (post-sale price protection adjustments), quality mix differentials, and price ''overstatements'' based on differences between USDA data and Bureau of Census import statistics.

The petitioners based normal value on wholesale prices for vine ripe and plum tomatoes from several wholesale markets in Mexico, as published by the USDA marketing service. The petitioners made adjustments to home market prices for wholesaler markups, commissions, and movement expenses.

To calculate monthly normal values for comparisons to monthly export prices, the petitioners based normal value on both home market prices and constructed value (CV) because, in accordance with Section 773(b)(2) of the Act, the petitioners alleged that some sales of fresh tomatoes in the home market were made at prices below the cost of production (COP), and therefore are not an appropriate basis for calculating normal value.

The petitioners calculated COP using data derived from cost studies of vine-ripe tomato production in Mexico prepared by the USDA, which relied on cost studies reported by an association of Mexican tomato producers. Where appropriate, the petitioners adjusted the cost data for inflation, changes in interest rates, and currency conversion. We adjusted the petitioners' COP by correcting the deduction for selling expenses.

The allegation that the Mexican producers are selling the foreign like product in the home market at prices below its COP is based upon a comparison of the adjusted home market prices with the calculated COP. Based on this comparison, we find reasonable grounds to believe or suspect that sales of the foreign like product were made at prices below COP in accordance with section 773(b)(2)(A)(i) of the Act. Accordingly, the Department is initiating a country-wide cost investigation.

Therefore, for the purposes of this initiation, we are accepting CV as the appropriate basis for Mexican normal value for those petition margin examples where the petitioners claimed that there are no above-cost sales in the home market. The petitioners based CV on its COP methodology, described above, deducting commission and export transportation expenses included in these costs, and adding an amount for profit to derive a total CV. The petitioners calculated profit based on above-cost Mexican market prices. We revised CV by incorporating the correction to selling expenses deducted from COP. We also recalculated the profit amount used in CV based on a revised database of above cost sales in the home market.

Based on comparisons of export prices, with deductions for backbilling adjustments and ''price overstatements,'' to normal value (with CV revised as discussed above), the petitioners allege margins of 12.86 percent to 273.42 percent.

Fair Value Comparisons

Based on the data provided by the petitioners, there is reason to believe that imports of fresh tomatoes from Mexico are being, or are likely to be, sold at less than fair value. If it becomes necessary at a later date to consider the petition as a source of facts available under section 776 of the Act, we may further review the margin calculations in the petition.

Initiation of Investigation

We have examined the petition on fresh tomatoes and have found that it meets the requirements of section 732 of the Act, including the requirements concerning allegations of material injury or threat of material injury to the domestic producers of a domestic like product by reason of the complained-of imports, allegedly sold at less than fair value. Therefore, we are initiating an antidumping duty investigation to determine whether imports of fresh tomatoes from Mexico are being, or are likely to be, sold at less than fair value. Unless extended, we will make our preliminary determination by September 5, 1996.

Distribution of Copies of the Petition

In accordance with section 732(b)(3)(A) of the Act, a copy of the public version of the petition has been provided to the representatives of the Government of Mexico. Because of the large number of exporters, we will attempt to provide a copy of the public version of the petition to the relevant trade associations representing exporters of fresh tomatoes named in the petition.

International Trade Commission (ITC) Notification

We have notified the ITC of our initiation, as required by section 732(d) of the Act.

Preliminary Determinations by the ITC

The ITC will determine by May 16, 1996, whether there is a reasonable indication that imports of fresh tomatoes from Mexico are causing material injury, or threatening to cause material injury, to a U.S. industry. A negative ITC determination will result in the investigation being terminated; otherwise, the investigation will proceed according to statutory and regulatory time limits.

Dated: April 18, 1996.

Susan G. Esserman,

Assistant Secretary for Import Administration.

[FR Doc. 96–10112 Filed 4–24–96; 8:45 am]

BILLING CODE 3510–DS–P

Initiation of Antidumping and Countervailing Duty Administrative Reviews and Requests for Revocation in Part

AGENCY: Import Administration, International Trade Administration, Department of Commerce.

ACTION: Notice of Initiation of Antidumping and Countervailing Duty Administrative Reviews and Requests for Revocation in Part.

SUMMARY: The Department of Commerce (the Department) has received requests to conduct administrative reviews of various antidumping and countervailing duty orders and findings with March anniversary dates. In accordance with the Department's regulations, we are initiating those administrative reviews. The Department also received requests to revoke one antidumping duty order in part.

EFFECTIVE DATE: April 25, 1996.

FOR FURTHER INFORMATION CONTACT: Holly A. Kuga, Office of Antidumping Compliance, Import Administration, International Trade Administration, U.S. Department of Commerce, 14th Street and Constitution Avenue, N.W., Washington, D.C. 20230, telephone: (202) 482–4737.

SUPPLEMENTARY INFORMATION:

Background

The Department has received timely requests, in accordance with 19 C.F.R. 353.22(a) and 355.22(a)(1994), for administrative reviews of various antidumping and countervailing duty orders and findings with March anniversary dates. The Department also received timely requests to revoke in part the antidumping duty order on steel wire rope from Korea.

Initiation of Reviews

In accordance with sections 19 CFR 353.22(c) and 355.22(c), we are initiating administrative reviews of the following antidumping and countervailing duty orders and findings. The Department is not initiating an administrative review of any exporters and/or producers who were not named in a review request because such exporters and/or producers were not specified as required under section 353.22(a) and 355.22(a)(19 CFR 353.22(a) and 355.22(a)). We intend to issue the final results of these reviews not later than March 31, 1997.

	Period to be reviewed
Antidumping Duty Proceedings:	
Brazil: Ferrosilicon, A–351–820—Companhia Ferroligas Minas Gerais-Minasligas	3/1/95–2/29/96
South Korea: Steel Wire Rope, A–580–811—Boo Kook Corporation, Chun Kee Steel & Wire Rope Co., Ltd., Chung Woo Rope Co., Ltd., Dong-Il Steel Mfg. Co., Ltd., Hanboo Wire Rope, Inc., Kumho Rope, Manho Rope Mfg. Co., Ltd., Myung Jin Co., Seo Jin Rope, Ssang Yong Steel Wire Co., Ltd., Sung Jin Yeonsin Metal	3/1/95–2/29/96
Spain: Stainless Steel Bar, A–469–805—Roldan, S.A.	8/4/94–2/29/96
Thailand: Circular Welded Pipes & Tubes, A–549–502—Saha Thai Steel Pipe Co., Ltd., S.A.F. Pipe Export Co., Ltd., Thai Union Steel Co., Ltd.,	3/1/95–2/29/96
The People's Republic of China: Axes/Adzes; Bars/Wedges; Hammers/Sledges; and Picks/Mattocks, A–570–803—Tianjin Machinery Import & Export Company [1]	2/1/95–1/31/96
United Kingdom: Lead & Bismuth Steel, A–412–810—British Steel Engineering Steels, Ltd., British Steel Engineering Steels Holdings, Ltd., British Steel plc	3/1/95–2/29/96
Countervailing Duty Proceedings:	
Pakistan: Shop Towels, C–535–001—Anwar Corporation, Bita Textile Corporation, Eastern Textiles (Pvt) Ltd., Fine Fabrico, Hilal Corporation (Pvt) Ltd, Jawad Brothers, Mehtabi Towel Mills (Pvt) Ltd., Mohain Brothers, Pakistan Textile Corporation (Pvt) Ltd., Quality Linen Supply Corporation, Salimah International, Shaheen Textiles, Shahi Textiles, Sultex Industries, The Khans, United Towel Exporters	1/1/95–12/31/95
Turkey: Welded Carbon Steel Line Pipe and Certain Welded Carbon Steel Pipes and Tubes, C–489–502—Borusan Birlesik Boru Fab. A.S., Borusan Ihracat Ithalat ve Dagitim A.S., Erbosan Erciyas Boru Sanayii ve Ticaret A.s., Mannesman-Sumerbank Boru Endustrisi T.A.S.	1/1/95–12/31/95
United Kingdom: Lead & Bismuth Steel, C–412–811—British Steel Engineering Steels Ltd., British Steel Engineering Steels Holdings Ltd., British Steel plc	1/1/95–12/31/95

[1] Inadvertently omitted from previous initiation notice.

If requested within 30 days of the date of publication of this notice, the Department will determine whether antidumping duties have been absorbed by an exporter or producer subject to any of these reviews if the subject merchandise is sold in the United States through an importer which is affiliated with such exporter or producer.

Interested parties must submit applications for disclosure under administrative protective orders in accordance with 19 CFR 353.34(b) and 355.34(b).

These initiations and this notice are in accordance with section 751(a) of the Tariff Act of 1930, as amended (19 U.S.C. 1675(a)) and 19 CFR 353.22(c)(1) and 355.22(c)(1).

Dated: April 19, 1996.

Joseph A. Spetrini,

Deputy Assistant Secretary for Compliance.

[FR Doc. 96–10277 Filed 4–24–96; 8:45 am]

BILLING CODE 3510–DS–M

Foreign-Trade Zones Board

[Docket 32–96]

Foreign-Trade Zone 31—Granite City, Illinois; Application for Subzone Status; Shell Oil Company (Oil Refinery Complex); Madison County, Illinois

An application has been submitted to the Foreign-Trade Zones Board (the Board) by the Tri-City Port District, grantee of FTZ 31, requesting special-purpose subzone status for the oil refinery complex of Shell Oil Company, located in Madison County, Illinois. The application was submitted pursuant to the provisions of the Foreign-Trade Zones Act, as amended (19 U.S.C. 81a–81u), and the regulations of the Board (15 CFR part 400). It was formally filed on April 17, 1996.

The refinery complex (1,922 acres, 1,100 employees) consists of 3 sites and related pipelines in Madison County, Illinois, some 25 miles east of St. Louis, Missouri: *Site 1* (1533 acres)—main refinery complex (290,000 BPD) located at Hwy 111 in Wood River Township, including areas located in the towns of Roxana, Hartford, South Roxana and Wood River; *Site 2* (289 acres)—crude oil storage facility (3.2 mil. barrel capacity) located across Hwy 111 from the refinery, and; *Site 3* (100 acres)—sulfur recovery plant located adjacent to the refinery.

The refinery complex is used to produce fuels and petrochemical feedstocks. Fuels produced include gasoline, jet fuel, distillates, diesel, and residual fuels. Petrochemical feedstocks and refinery by-products may include methane, ethane, propane, butane, butylene, toluene, propylene, paraffin wax, carbon black oil, cumene, sulfur and petroleum coke. About 60 percent of the crude oil and related products (e.g., condensate) (90 percent of inputs), and some feedstocks and motor fuel blendstocks used in producing fuel products are sourced abroad.

Zone procedures would exempt the activity from Customs duty payments on the foreign products used in its exports. On domestic sales, the company would be able to choose the finished product duty rate (nonprivileged foreign status—NPF) on certain petrochemical feedstocks and refinery by-products (duty-free) instead of the duty rates that would otherwise apply to the foreign-sourced inputs (e.g., crude oil). The duty rates on crude oil and condensate range from 5.25¢/barrel to 10.5¢/barrel. The application indicates that the savings from zone procedures would help improve the refinery's international competitiveness.

In accordance with the Board's regulations, a member of the FTZ Staff

has been designated examiner to investigate the application and report to the Board.

Public comment is invited from interested parties. Submissions (original and 3 copies) shall be addressed to the Board's Executive Secretary at the address below. The closing period for their receipt is June 24, 1996. Rebuttal comments in response to material submitted during the foregoing period may be submitted during the subsequent 15-day period (to July 9, 1996).

A copy of the application and accompanying exhibits will be available for public inspection at each of the following locations:

U.S. Department of Commerce District Office, 8182 Maryland Avenue, Suite 303, St. Louis, Missouri 63105

Office of the Executive Secretary, Foreign-Trade Zones Board, Room 3716, U.S. Department of Commerce, 14th & Pennsylvania Avenue, NW, Washington, DC 20230.

Dated: April 17, 1996.

John J. Da Ponte, Jr.,

Executive Secretary.

[FR Doc. 96–10111 Filed 4–24–96; 8:45 am]

BILLING CODE 3510–DS–P

[Docket 30–96]

Foreign-Trade Zone 20—Hampton Roads, VA Area (Norfolk-Newport News Customs Port of Entry); Application for Expansion

An application has been submitted to the Foreign-Trade Zones Board (the Board) by the Virginia Port Authority (VPA), grantee of Foreign-Trade Zone (FTZ) 20, requesting authority to expand its zone at sites in the Hampton Roads and Front Royal, Virginia areas, adjacent to the Norfolk-Newport News Customs port of entry area (includes Front Royal station). The application was submitted pursuant to the provisions of the FTZ Act, as amended (19 U.S.C. 81a–81u), and the regulations of the Board (15 CFR Part 400). It was formally filed on April 15, 1996.

FTZ 20 was approved on April 15, 1975 (Board Order 105, 40 FR 17884, 4/23/75), and currently consists of three sites: *Site 1* (3 acres)—631 Carolina Rd., Suffolk; *Site 2* (9 acres)—108 Lakeview Parkway, Suffolk; and, *Site 3* (11 acres)—630 Woodlake, Chesapeake.

The applicant, in a major revision to its zone plan, now requests authority to expand FTZ 20 to include ten new sites (3,317 acres) in the Hampton Roads and Front Royal areas, including three marine terminals, six industrial parks and a warehouse facility: *Proposed Site 4* (905 acres)—Norfolk International Terminals (NIT), 7737 Hampton Blvd., Norfolk; *Proposed Site 5* (242 acres)—Portsmouth Marine Terminal (PMT), 2000 Seaboard Avenue, Portsmouth; *Proposed Site 6* (184 acres)—Newport News Marine Terminal (NNMT), 25th & Warwick Blvd., Newport News; *Proposed Site 7* (6 parcels, 490 acres)—Warren County Industrial Corridor (Front Royal Site), Routes 340, 522 and 661, Front Royal; *Proposed Site 8* (394 acres)—Bridgeway Commerce Park, Interstate 664, Suffolk; *Proposed Site 9* (689 acres)—Cavalier Industrial Park, Interstate 64 and U.S. Route 13, Chesapeake; *Proposed Site 10* (26 acres)—D.D. Jones Transfer & Warehouse, Inc. facility, 1920 Campostella Road, Chesapeake; *Proposed Site 11* (177 acres)—New Boone Farm Industrial Park, Interstate 664, Chesapeake; *Proposed Site 12* (60 acres)—PortCentre Commerce Park, Route 264, Portsmouth; and, *Proposed Site 13* (150 acres)—Suffolk Industrial Park, 595 Carolina Road, Suffolk. The NIT, PMT, and NNMT terminals, and a site in Front Royal, are owned by VPA, and the other sites are owned by other area public entities and private corporations.

No specific manufacturing requests are being made at this time. Such requests would be made to the Board on a case-by-case basis.

In accordance with the Board's regulations, a member of the FTZ Staff has been designated examiner to investigate the application and report to the Board.

Public comment on the application is invited from interested parties. Submissions (original and 3 copies) shall be addressed to the Board's Executive Secretary at the address below. The closing period for their receipt is June 24, 1996. Rebuttal comments in response to material submitted during the foregoing period may be submitted during the subsequent 15-day period (to July 9, 1996).

A copy of the application and accompanying exhibits will be available for public inspection at each of the following locations:

Virginia Port Authority, 600 World Trade Center, Norfolk, Virginia 23510–1696;

Office of the Executive Secretary, Foreign-Trade Zones Board, Room 3716, U.S. Department of Commerce, 14th and Pennsylvania Avenue, NW, Washington, DC 20230.

Dated: April 16, 1996

John J. Da Ponte, Jr.,

Executive Secretary.

[FR Doc. 96–10109 Filed 4–24–96; 8:45 am]

BILLING CODE 3510–DS–P

International Trade Administration

[A–580–809]

Circular Welded Non-Alloy Steel Pipe From Korea; Termination of Antidumping Duty Administrative Review

AGENCY: Import Administration, International Trade Administration, Department of Commerce.

ACTION: Notice of Termination of Antidumping Duty Administrative Review.

SUMMARY: On December 15, 1995, the Department of Commerce (the Department) published in the Federal Register (60 FR 64413) the notice of initiation of administrative review of the antidumping duty order on circular welded non-alloy steel pipe from Korea, for the period of November 1, 1994 through October 31, 1995. This review has now been terminated as a result of withdrawals by the interested parties that requested the review.

EFFECTIVE DATE: April 25, 1996.

FOR FURTHER INFORMATION CONTACT: Mark Ross or Richard Rimlinger, Office of Antidumping Compliance, Import Administration, International Trade Administration, U.S. Department of Commerce, 14th Street and Constitution Avenue, N.W., Washington, D.C. 20230; telephone: (202) 482–4733.

SUPPLEMENTARY INFORMATION:

Background

We received requests for review pursuant to 19 CFR 353.22(a) (1994) for the following specifically-named exporters/manufacturers:

Dongbu Steel Co., Ltd.
Hyundai Pipe Co., Ltd.
Korea Iron and Steel Co., Ltd.
Korea Steel Pipe Co., Ltd.
Pusan Steel Pipe Co., Ltd.

On December 15, 1995, the Department published in the Federal Register (60 FR 64413) the notice of initiation of the administrative review.

Termination of Review

We received timely requests for withdrawal from Dongbu Steel Co., Ltd., Hyundai Pipe Co., Ltd., Korea Iron and Steel Co., Ltd., Shinho Steel Co., Ltd. (formerly Korea Steel Pipe Co., Ltd.), and SeAH Steel Corporation (formerly Pusan Steel Pipe Co., Ltd.). There were no other requests for review. Therefore, in accordance with section 353.22(a)(5) of the Department's regulations, the Department has terminated this administrative review.

This notice is published in accordance with section 751 of the

Tariff Act of 1930, as amended (19 U.S.C. 1675), and 19 CFR 353.22(a)(5).

Dated: April 17, 1996.

Joseph A. Spetrini,

Deputy Assistant Secretary for Compliance.

[FR Doc. 96–10283 Filed 4–24–96; 8:45 am]

BILLING CODE 3510–DS–P

Notice of Scope Rulings

AGENCY: Import Administration, International Trade Administration, Department of Commerce.

ACTION: Notice of scope rulings and anticircumvention inquiries.

SUMMARY: The Department of Commerce (the Department) hereby publishes a list of scope rulings and anticircumvention inquiries completed between January 1, 1996, and March 31, 1996. In conjunction with this list, the Department is also publishing a list of pending requests for scope clarifications and anticircumvention inquiries. The Department intends to publish future lists within 30 days of the end of each quarter.

EFFECTIVE DATE: April 25, 1996.

FOR FURTHER INFORMATION CONTACT: Ronald M. Trentham, Office of Antidumping Compliance, Import Administration, International Trade Administration, U.S. Department of Commerce, 14th Street and Constitution Avenue, NW, Washington, D.C. 20230; telephone: (202) 482–4793.

Background

The Department's regulations (19 CFR 353.29(d)(8) and 355.29(d)(8)) provide that on a quarterly basis the Secretary will publish in the Federal Register a list of scope rulings completed within the last three months.

This notice lists scope rulings and anticircumvention inquiries completed between January 1, 1996, and March 31, 1996, and pending scope clarification and anticircumvention inquiry requests. The Department intends to publish in July 1996 a notice of scope rulings and anticircumvention inquiries completed between April 1, 1996, and June 30, 1996, as well as pending scope clarification and anticircumvention inquiry requests.

The following lists provide the country, case reference number, requester(s), and a brief description of either the ruling or product subject to the request.

I. Scope Rulings Completed Between January 1, 1996 and March 31, 1996

Country: Brazil

A–351–809—Circular Welded Non-Alloy Steel Pipe

Allied Tube & Conduit Corp., American Tube Co., Century Tube Corp., CSI Tubular Productions, Inc., Laclede Steel Co., LTV Tubular Productions Co., Sawhill Tubular Division, Sharon Tube Co., Tex-Tube Division, Western Tube & Conduit Corp., Wheatland Tube Co.—Pipe produced to API 5L line pipe specifications or to both ASTM A–53 standard pipe specification and the API 5L line pipe specification (dual-certified pipe) is outside the scope of the order. 03/14/96

Country: Germany

A–428–801—Antifriction Bearings

Marquardt Switches—Medium carbon steel balls imported by Marquardt are outside the scope of the order. 03/21/96

Country: Korea

A–580–809—Circular Welded Non-Alloy Steel Pipe

Allied Tube & Conduit Corp., American Tube Co., Century Tube Corp., CSI Tubular Productions, Inc., Laclede Steel Co., LTV Tubular Productions Co., Sawhill Tubular Division, Sharon Tube Co., Tex-Tube Division, Western Tube & Conduit Corp., Wheatland Tube Co.—Pipe produced to API 5L line pipe specifications or to both ASTM A–53 standard pipe specification and the API 5L line specification (dual-certified pipe), is not within the scope of the order. 03/14/96

Country: Mexico

A–201–802—Gray-Portland Cement and Cement Clinker

Cementos de Chihuahua S.A. de C.V. and Mexcement, Inc.—Masonry cement is not within the scope of the order. 1/18/96

A–201–805—Circular Welded Non-Alloy Steel Pipe

Allied Tube & Conduit Corp., American Tube Co., Century Tube Corp., CSI Tubular Productions, Inc. Laclede Steel Co., LTV Tubular Productions Co., Sawhill Tubular Division, Sharon Tube Co., Tex Tube Division, Western Tube & Conduit Corp., Wheatland Tube Co.—Pipe produced to API 5L line pipe specifications or to both ASTM A–53 standard pipe specification and the API 5L line pipe specification (dual-certified pipe), is outside the scope of the order. 03/14/96

Tubacero International Corporation—Circular welded carbon steel piping, 16 inches in outside diameter with 3/8 inch wall thickness, for use in extremely heavy load bearing applications, is within the scope of the order. 03/26/96

Country: Venezuela

A–307–805—Circular Welded Non-Alloy Steel Pipe

Self Initiation—Pipe produced to API 5L line pipe specifications or to both ASTM A–53 standard pipe specification and the API 5L line pipe specification (dual-certified pipe), are outside the scope of the order. 03/14/96

II. Anticircumvention Rulings Completed Between January 1, 1996 and March 31, 1996

None.

III. Scope Inquiries Terminated Between January 1, 1996 and MARCH 31, 1996:

Country: France

A–427–078—Sugar

Boiron-Borneman, Inc.—Clarification to determine whether manufactured homeopathic sugar pellets are within the scope of the finding. Scope inquiry terminated on 03/12/96

IV. Anticircumvention Inquiries Terminated Between January 1, 1996 and March 31, 1996

None.

V. Pending Scope Clarification Requests as of March 31, 1996

Country: Brazil

A–351–817, C–351–818—Certain Cut-to-Length Carbon Steel Plate

Wirth Limited—Clarification to determine whether profile slabs produced by Companhia Siderurgica de Tubarao and imported by Wirth Limited are within the scope of the order.

Country: Germany

A–428–801—Antifriction Bearings (Other Than Tapered Roller Bearings) and Parts Thereof

Enkotec Company, Inc.—Clarification to determine whether the ''main bearings'' imported for incorporation into Enkotec Rotary Nail Machines are slewing rings and, therefore, outside the scope of the order.

Country: Turkey

A–489–501—Welded Carbon Steel Standard Pipe and Tube Products

Allied Tube and Conduit Corporation, Wheatland Tube Company, Laclede Steel Company, Sharon Tube Company, and Sawhill Tubular Division of Armco,

Inc.—Clarification to determine whether pipe and tube which meets the order's physical specifications, when intended for or actually used as standard pipe and tube, is included within the scope of the order.

Country: Singapore

A–559–801—Antifriction Bearings (Other Than Tapered Roller Bearings) and Parts Thereof

Rockwell International Corporation—Clarification to determine whether an automotive component known as a cushion suspension unit (or cushion assembly unit or bearing assembly) is within the scope of the order.

Country: People's Republic of China

A–570–504—Petroleum Wax Candles

Mervyn's—Clarification to determine whether a candle, article no. 20172, in the shape of a cube is within the scope of the order.

Enesco Corporation—Clarification to determine whether 10 styles of candles imported from the PRC are within the scope of the order.

Midwest of Cannon Falls—Clarification to determine whether 7 styles of candles imported from the PRC are within the scope of the order.

Morris Friedman & Co.—Clarification to determine whether a candle in a galvanized steel bucket and a candle in a glass container are within the scope of the order.

A–570–808—Chrome-Plated Lug Nuts

Consolidated International Automotive, Inc.—Clarification to determine whether certain nickel-plated lug nuts are within the scope of the order.

Wheel Plus, Inc.—Clarification to determine whether imported zinc-plated lug nuts which are chrome-plated in the United States are within the scope of the order.

A–570–820—Certain Compact Ductile Iron Waterworks (CDIW) Fittings and Glands

Star Pipe Products, Inc.—Clarification to determine whether ''retainer glands'' are within the scope of the order.

A–570–822—Helical Spring Lock Washers (HSLWs)

Shakeproof Industrial Products Division of Illinois Tool Works (SIP)—Clarification to determine whether HSLWs which are imported to the U.S. in an uncut, coil form are within the scope of the order.

Country: Taiwan

A–583–810—Chrome-Plated Lug Nuts

Consolidated International Automotive, Inc.—Clarification to determine whether certain nickel-plated lug nuts are within the scope of the order.

A–583–820—Helical Spring Lock Washers (HSLWs)

Shakeproof Industrial Products Division of Illinois Tool Works (SIP)—Clarification to determine whether HSLWs imported into the U.S. in an uncut, coil form are within the scope of the order.

Country: Japan

A–588–055—Acrylic Sheet from Japan

Sumitomo Chemical Co., Ltd.—Clarification to determine whether Sumielec, an acrylic based antistatic material, is within the scope of the order.

A–588–056—Melamine

Taiyo America, Inc.—Clarification to determine whether melamine with special physical characteristics (100% of the particles are smaller than 10 microns) are within the scope of the order.

A–588–405—Cellular Mobile Telephones and Subassemblies

Matsushita Communication Industrial Corporation and related entities—Clarification to determine whether Panasonic portable cellular telephone (PCT) hands-free device, model number EB–HF7002, is within the scope of the order.

A–588–702—Stainless Steel Butt-Weld Pipe Fittings

Benkan America, Inc. and Benkan UCT Corporation—Clarification to determine whether the superclean fittings (SCFs) manufactured by Benkan UCT are within the scope of the order.

A–588–802—3½″ Microdisks

TDK Inc., TDK Electronics Co.—Clarification to determine whether certain web roll media are within the scope of the order.

A–588–804—Antifriction Bearings (Other Than Tapered Roller Bearings), and Parts Thereof

Dana Corporation—Clarification to determine whether an automotive component known variously as a center bracket assembly, center bearing assembly, support bracket, or shaft support bearing, is within the scope of the order.

Rockwell International Corporation—Clarification to determine whether an automotive component known as a cushion suspension unit (or cushion assembly unit or center bearing assembly) is within the scope of the order.

A–588–807—Industrial Belts and Components and Parts Thereof, Whether Cured or Uncured

Honda Power Equipment Manufacturing Inc. (HPE)—Clarification to determine whether certain belts HPE imports from Japan for use in manufacturing lawn tractors and riding lawn mowers are within the scope of the order.

A–588–809—Small Business Telephone Systems and Subassemblies and Parts Thereof

Iwatsu America, Inc. and Iwatsu Electric Co.—Clarification to determine whether certain dual use subassemblies (central processing units and read-only-memory units) are within the scope of the order.

A–588–810—Mechanical Transfer Presses

Komatsu Ltd.—Clarification to determine whether certain mechanical transfer press parts exported from Japan are within the scope of the order.

A–588–815—Gray Portland Cement and Clinker

Surecrete, Inc.—Clarification to determine whether New Super Fine Cement manufactured by Nittetsu Cement Co., Ltd., is within the scope of the order.

A–588–824—Corrosion Resistant Carbon Steel Flat Products

Drive Automotive Industries—Clarification to determine whether 2000 millimeter wide, made to order, corrosion resistant carbon steel coils are within the scope of the order.

VI. Pending Anticircumvention Inquiries as of March 31, 1996

Country: Korea

A–580–008—Color Television Receivers from Korea

International Brotherhood of Electrical Workers, the International Union of Electronic Electrical, Salaried, Machine & Furniture Workers, and the Industrial Union Department (the Unions)—Anticircumvention inquiry to determine whether Samsung Electronics Co., L.G. Electronics Inc., and Daewoo Electronics Co., are circumventing the order by shipping Korean-origin color picture tubes, printed circuit boards, color television kits, chassis, and other materials, parts and components to plants operated by related parties in Mexico where the parts are then assembled in CTVs and shipped to the U.S. Additionally, an anticircumvention inquiry to determine whether Samsung is circumventing the order by shipping Korean-origin color picture tubes and other CTV parts to a related party in Thailand for assembly into complete CTVs prior to exportation to the U.S.

Interested parties are invited to comment on the accuracy of the list of

pending scope clarification requests. Any comments should be submitted to the Assistant Secretary for Import Administration, International Trade Administration, Room B–099, U.S. Department of Commerce, 14th Street and Constitution Avenue, N.W., Washington, D.C. 20230.

Dated: April 17, 1996.

Joseph A. Spetrini,

Deputy Assistant Secretary for Compliance.

[FR Doc. 96–10108 Filed 4–24–96; 8:45 am]

BILLING CODE 3510–DS–P

National Oceanic and Atmospheric Administration

[I.D. 032996A]

Gulf of Mexico Fishery Management Council; Public Meeting

AGENCY: National Marine Fisheries Service (NMFS), National Oceanic and Atmospheric Administration (NOAA), Commerce.

ACTION: Notice of cancellation of public meetings.

SUMMARY: The Gulf of Mexico Fishery Management Council has cancelled public meetings of the Mackerel Advisory Panel (AP), and the Standing and Special Mackerel Scientific and Statistical Committee (SSC) that were scheduled for April 29 and 30, 1996. The meetings were announced in the Federal Register on April 8, 1996.

FOR FURTHER INFORMATION CONTACT: Wayne E. Swingle, Executive Director, Gulf of Mexico Fishery Management Council, telephone: 813–228–2815.

SUPPLEMENTARY INFORMATION: The initial notice published on April 8, 1996 (61 FR 15469). Because of data deficiencies, the Mackerel Stock Assessment Panel (SAP) was unable to develop an allowable biological catch range or report for Gulf group king mackerel. Therefore, the AP and SSC meetings scheduled to review the SAP report are cancelled.

All other information pertaining to the other meetings announced in the previous notice remains unchanged.

Dated: April 22, 1996.

Richard W. Surdi,

Acting Director, Office of Fisheries Conservation and Management, National Marine Fisheries Service.

[FR Doc. 96–10313 Filed 4–22–96; 4:21 pm]

BILLING CODE 3510–22–F

COMMITTEE FOR THE IMPLEMENTATION OF TEXTILE AGREEMENTS

Amendment of Import Limits for Certain Cotton, Wool and Man-Made Fiber Textile Products Produced or Manufactured in Burma (Myanmar)

April 19, 1996.

AGENCY: Committee for the Implementation of Textile Agreements (CITA).

ACTION: Issuing a directive to the Commissioner of Customs increasing limits.

EFFECTIVE DATE: April 25, 1996.

FOR FURTHER INFORMATION CONTACT: Ross Arnold, International Trade Specialist, Office of Textiles and Apparel, U.S. Department of Commerce, (202) 482–4212. For information on the quota status of these limits, refer to the Quota Status Reports posted on the bulletin boards of each Customs port or call (202) 927–5850. For information on embargoes and quota re-openings, call (202) 482–3715.

SUPPLEMENTARY INFORMATION:

Authority: Executive Order 11651 of March 3, 1972, as amended; section 204 of the Agricultural Act of 1956, as amended (7 U.S.C. 1854).

The U.S. Government has decided to increase the 1995 and 1996 base limits for textile products, produced or manufactured in Burma (Myanmar), as provided for under the Uruguay Round Agreements Act and the Uruguay Round Agreement on Textiles and Clothing (ATC).

In the letter published below, the Chairman of CITA directs the Commissioner of Customs to increase the limits for the 1996 quota period.

A description of the textile and apparel categories in terms of HTS numbers is available in the CORRELATION: Textile and Apparel Categories with the Harmonized Tariff Schedule of the United States (see Federal Register notice 60 FR 65299, published on December 19, 1995). Also see 60 FR 62405, published on December 6, 1995.

The letter to the Commissioner of Customs and the actions taken pursuant to it are not designed to implement all of the provisions of the Uruguay Round Agreements Act and the Uruguay Round Agreement on Textiles and Clothing (ATC), but are designed to assist only in the implementation of certain of their provisions.

Troy H. Cribb,

Chairman, Committee for the Implementation of Textile Agreements.

Committee for the Implementation of Textile Agreements

April 19, 1996.

Commissioner of Customs,

Department of the Treasury, Washington, DC 20229.

Dear Commissioner: This directive amends, but does not cancel, the directive issued to you on November 29, 1995, by the Chairman, Committee for the Implementation of Textile Agreements. That directive concerns imports of certain cotton, wool and man-made fiber textile products, produced or manufactured in Burma (Myanmar) and exported during the twelve-month period which began on January 1, 1996 and extends through December 31, 1996.

Effective on April 25, 1996, you are directed to increase the limits for the following categories, as provided for under the Uruguay Round Agreements Act and the Uruguay Round Agreement on Textiles and Clothing (ATC)

Category	Amended twelve-month limit [1]
340/640	95,864 dozen.
342/642	25,893 dozen.
347/348	134,306 dozen.
351/651	40,695 dozen.
448	2,362 dozen.
647/648/847	25,045 dozen.

[1] The limits have not been adjusted to account for any imports exported after December 31, 1995.

The Committee for the Implementation of Textile Agreements has determined that these actions fall within the foreign affairs exception to the rulemaking provisions of 5 U.S.C.553(a)(1).

Sincerely,

Troy H. Cribb,

Chairman, Committee for the Implementation of Textile Agreements.

[FR Doc.96–10275 Filed 4–24–96; 8:45 am]

BILLING CODE 3510–DR–F

Amendment of an Import Restraint Limit for Certain Cotton and Man-Made Fiber Textile Products Produced or Manufactured in El Salvador

April 19, 1996.

AGENCY: Committee for the Implementation of Textile Agreements (CITA).

ACTION: Issuing a directive to the Commissioner of Customs increasing a limit.

EFFECTIVE DATE: April 25, 1996.

FOR FURTHER INFORMATION CONTACT: Jennifer Aldrich, International Trade Specialist, Office of Textiles and

Apparel, U.S. Department of Commerce, (202) 482–4212. For information on the quota status of this limit, refer to the Quota Status Reports posted on the bulletin boards of each Customs port or call (202) 927–5850. For information on embargoes and quota re-openings, call (202) 482–3715.

SUPPLEMENTARY INFORMATION:

Authority: Executive Order 11651 of March 3, 1972, as amended; section 204 of the Agricultural Act of 1956, as amended (7 U.S.C. 1854).

The Governments of the United States and El Salvador agreed to increase the 1996 base limit for cotton and man-made fiber textile products in Categories 351/651.

A description of the textile and apparel categories in terms of HTS numbers is available in the CORRELATION: Textile and Apparel Categories with the Harmonized Tariff Schedule of the United States (see Federal Register notice 60 FR 65299, published on December 19, 1995). Also see 60 FR 65296, published on December 19, 1995.

The letter to the Commissioner of Customs and the actions taken pursuant to it are not designed to implement all of the provisions of the Uruguay Round Agreements Act and the Uruguay Round Agreement on Textiles and Clothing, but are designed to assist only in the implementation of certain of their provisions.

Troy H. Cribb,

Chairman, Committee for the Implementation of Textile Agreements.

Committee for the Implementation of Textile Agreements

April 19, 1996.

Commissioner of Customs,
Department of the Treasury, Washington, DC 20229.

Dear Commissioner: This directive amends, but does not cancel, the directive issued to you on December 13, 1995, by the Chairman, Committee for the Implementation of Textile Agreements. That directive concerns imports of certain cotton and man-made fiber textile products, produced or manufactured in El Salvador and exported during the twelve-month period beginning on January 1, 1996 and extending through December 31, 1996.

Effective on April 25, 1996, you are directed to increase the limit for Categories 351/651 to 457,500 dozen [1], as provided for under the Uruguay Round Agreements Act and the Uruguay Round Agreement on Textiles and Clothing.

The Committee for the Implementation of Textile Agreements has determined that this action falls within the foreign affairs exception of the rulemaking provisions of 5 U.S.C. 553(a)(1).

Sincerely,

Troy H. Cribb,

Chairman, Committee for the Implementation of Textile Agreements.

[FR Doc. 96–10276 Filed 4–24–96; 8:45 am]

BILLING CODE 3510–DR–F

[1] The limit has not been adjusted to account for any imports exported after December 31, 1995.

CONSUMER PRODUCT SAFETY COMMISSION

Sunshine Act Meeting

AGENCY: U.S. Consumer Product Safety Commission.

TIME AND DATE: Tuesday, April 30, 1996.

LOCATION: Room 420, East-West Towers, 4330 East-West Highway, Bethesda, Maryland.

STATUS: Open to the public.

MATTER TO BE CONSIDERED:

Children's Sleepwear

The Commission will consider whether to issue final amendments of the children's sleepwear flammability standards to exempt tight fitting sleepwear garments and sleepwear garments intended for children younger than six months.

For a recorded message containing the latest agenda information, call (301) 504–0709.

CONTACT PERSON FOR ADDITIONAL INFORMATION: Sadye E. Dunn, Office of the Secretary, 4330 East-West Highway, Bethesda, MD 20207 (301) 504–0800.

Dated: April 22, 1996.

Sadye E. Dunn,

Secretary.

[FR Doc. 96–10403 Filed 4–23–96; 2:17 pm]

BILLING CODE 6355–01–M

DEPARTMENT OF DEFENSE

Department of the Air Force

Record of Decision (ROD) for the Disposal and Reuse of K. I. Sawyer Air Force Base (AFB), MI

On April 12, 1995, the Air Force signed the ROD for the disposal of K. I. Sawyer AFB. The decisions included in this ROD have been made in consideration of, but not limited to, the information contained in the Final Environmental Impact Statement (FEIS) filed with the Environmental Protection Agency on February 15, 1996.

K. I. Sawyer AFB closed on September 30, 1995, pursuant to the Defense Authorization Amendments and Base Closure and Realignment Act (Public Law 100–526) and recommendations of the Defense Secretary's Commission on Base Realignment and Closure. This ROD documents the K. I. Sawyer AFB disposal decisions.

The decision conveyed by the ROD is to dispose of K. I. Sawyer AFB in a manner that enables development of an airport, a manufacturing and business complex, recreational facilities and residential areas. This allowed for the central theme of the proposed future land use plans discussed in the FEIS to be fully implemented. The environmental findings and mitigation measures contained in the initial ROD remain fully applicable.

Consistent with the community reuse plan, the ROD balances airfield, business, industrial, and a recreational complex with family housing.

Several disposal methods and parcels are involved in the ROD, including public benefit conveyances (PBCs) to the Department of Education (DoEd) and the Department of Interior (DOI). Of a total of 5,215 acres, which includes 2,001 acres of land leased from the State of Michigan, it is anticipated the K. I. Sawyer Base Conversion Authority will acquire a total of 4,952 acres by the Jobs Commission of the State of Michigan in their potential economic development conveyance (EDC)(1,750 acres), Federal Aviation Administration conveyance (1,201 acres), and lease termination (2,001 acres).

The DOI, Parks and Recreation, anticipates requesting 112 acres, and the DoEd anticipates requesting 13 acres for a total of 125 acres as a PBC. The DOI, Bureau of Indian Affairs, has requested 113 acres as a federal transfer. The remaining 25 acres are a restrictive easement which will be extinguished.

The road network is an integral part of all parcels. Primary roads may be conveyed by negotiated sale to an eligible public body. Secondary roadways that fall within a parcel completely will be included as part of the parcel. The utility systems are totally integrated systems, prohibiting their separation among the various parcels. Therefore, disposal of the utility systems will include conditions under which the recipients must provide service to all parcels. Utility easements will be granted as appropriate. It is anticipated all primary roads, the gas and electric system, the water and wastewater systems, and the telephone communications systems, with appropriate easements for maintenance and repair, will be conveyed to the K. I. Sawyer Base Conversion Authority by the Jobs Commission of the State of Michigan through an EDC.

The implementation of the closure and reuse action and associated

mitigation measures will proceed with minimal adverse impact to the environment. This action conforms with applicable Federal, State and local statutes and regulations, and all reasonable and practical efforts have been incorporated to minimize harm to the local public and environment.

Any questions regarding this matter should be directed to Ms. Teresa R. Pohlman, Program Manager, Central Division. Correspondence should be sent to: AFBCA/CE, 1700 North Moore Street, Suite 2300, Arlington, VA 22209–2809.

Patsy J. Conner,

Air Force Federal Register Liaison Officer.

[FR Doc. 96–10262 Filed 4–24–96; 8:45 am]

BILLING CODE 3910–01–P

DEPARTMENT OF EDUCATION

National Library of Education Advisory Task Force; Meeting

AGENCY: National Library of Education Advisory Task Force, Education .

ACTION: Notice of meeting.

SUMMARY: This notice sets forth the schedule and proposed agenda for the second meeting of the National Library of Education Advisory Task Force (Task Force). This notice also describes the functions of the Task Force. Notice of this meeting is required under Section 10(a)(2) of the Federal Advisory Committee Act and is intended to notify the public of their opportunity to attend.

DATE AND TIME: May 20, 1996, 2:00 p.m. to 5:00 p.m.; May 21, 1996, 9:00 a.m. to 5:00 p.m.; May 22, 1996, 9:00 a.m. to 3:00 p.m.

ADDRESSES: Room 100, Capitol Place, 80 F Street, N.W., Washington, D.C. 20208.

FOR FURTHER INFORMATION CONTACT: E. Stephen Hunt, National Library of Education, 555 New Jersey Ave., N.W., Washington, D.C. 20208–5523. Telephone: (202) 219–1882; FAX: (202) 219–1970.

SUPPLEMENTARY INFORMATION: The National Library of Education Advisory Task Force is authorized by Part E, Section 851(h) of the Educational Research, Development, Dissemination, and Improvement Act of 1994. The Task Force prepares a set of recommendations on the establishment and development of the National Library of Education for presentation to the Assistant Secretary for the Office of Educational Research and Improvement.

The meeting of the Task Force is open to the public. The agenda for May 20–22 includes the discussion of public comment received regarding the development of the National Library of Education, receiving further public comment in the form of oral discussion by members of the public and organization representatives attending the meeting, and conducting Task Force business including planning the drafting of the Task force report.

A final agenda will be available from the offices of the National Library of Education on May 13, 1996.

Records are kept of all Task Force proceedings, and are available for public inspection at the central office of the National Library of Education, 555 New Jersey Ave., N.W., Washington, D.C. 20208–5523 between the hours of 8:30 a.m.–4:30 p.m.

Dated: April 18, 1996.

Sharon P. Robinson,

Assistant Secretary for Educational Research and Improvement.

[FR Doc. 96–10164 Filed 4–24–96; 8:45 am]

BILLING CODE 4000–01–M

DEPARTMENT OF ENERGY

Federal Energy Regulatory Commission

Notice of Amendment of License

April 19, 1996.

Take notice that the following hydroelectric application has been filed with the Commission and is available for public inspection:

a. Type of Application: Amendment of License.

b. Project No: 4885–039.

c. Date Filed: March 25, 1996.

d. Licensee: Twin Falls Hydro Associates Company.

e. Name of Project: Twin Falls Project.

f. Location: South Fork Snoqualmie River, in the Snohomish River Basin in King County, Washington.

g. Filed Pursuant to: Federal Power Act, 16 U.S.C. 791(a)–825(r).

h. Licensee Contact: Mr. Donald P. Jarrett, Operations Manager, Twin Falls Hydro Associates, P.O. Box 1029, North Bend, WA 98045, (206) 888–2720.

i. FERC Contact: Dr. John M. Mudre, (202) 219–1208.

j. Comment Date: May 21, 1996.

k. Description of Filing: Twin Falls Hydro Associates, licensee for the Twin Falls Project (FERC No. 4885) has requested a temporary decrease in the required minimum flow releases at the project's diversion dam. Specifically, the licensee proposes to reduce the minimum flow release from 150 cubic feet per second (cfs) to 75 cfs during May, June, and July, in 1996 and 1997. The minimum flow release reductions are being requested so that the licensee may study the impacts of the reduced flows on the aquatic resources of the South Fork Snoqualmie River. If no adverse impacts are noted, the licensee would request that the flow reduction be made permanent.

1. This notice also consists of the following standard paragraphs: B, C1, and D2.

B. Comments, Protests, or Motions to Intervene—Anyone may submit comments, a protest, or a motion to intervene in accordance with the requirements of Rules of Practice and Procedure, 18 CFR 385.210, .211, .214. In determining the appropriate action to take, the Commission will consider all protests or other comments filed, but only those who file a motion to intervene in accordance with the Commission's Rules may become a party to the proceeding. Any comments, protests, or motions to intervene must be received on or before the specified comment date for the particular application.

C1. Filing and Service of Responsive Documents—Any filings must bear in all capital letters the title ''COMMENTS'', ''RECOMMENDATIONS FOR TERMS AND CONDITIONS'', ''PROTEST'', or ''MOTION TO INTERVENE'', as applicable, and the Project Number of the particular application to which the filing refers. Any of the above-named documents must be filed by providing the original and the number of copies provided by the Commission's regulations to: The Secretary, Federal Energy Regulatory Commission, 888 First Street NE., Washington, DC 20426. A copy of any motion to intervene must also be served upon each representative of the Applicant specified in the particular application.

D2. Agency Comments—Federal, state, and local agencies are invited to file comments on the described application. A copy of the application may be obtained by agencies directly from the Applicant. If an agency does not file comments within the time specified for filing comments, it will be presumed to have no comments. One copy of an agency's comments must also be sent to the Applicant's representatives.

Lois D. Cashell,

Secretary.

[FR Doc. 96–10142 Filed 4–24–96; 8:45 am]

BILLING CODE 6717–01–M

Notice of Application Tendered for Filing With the Commission

April 19, 1996.

Take notice that the following hydroelectric application has been filed with the Commission and is available for public inspection:

a. Type of Application: New License.

b. Project No.: 1980–009.

c. Date Filed: February 27, 1996.

d. Applicant: Wisconsin Electric Power Company.

e. Name of Project: Big Quinnesec Falls Hydroelectric Project.

f. Location: On the Menominee River, in Florence and Marinette Counties, Wisconsin and Dickinson County, Michigan.

g. Filed Pursuant to: Federal Power Act 16 U.S.C. Sections 791(a)–825(r).

h. Applicant Contact: Rita L. Hayen, P.E., Wisconsin Electric Power Company, 231 West Michigan Street, P.O. Box 2046, Milwaukee, WI 53201–2046, (414) 221–2413.

i. FERC Contact: Patti Leppert-Slack (202) 219–2767.

j. Comment Date: June 18, 1996.

k. Description of Project: The proposed project consists of (1) an existing reservoir with a surface area of 272 acres and gross storage capacity of 3,790 acre-feet at the normal maximum surface elevation of 1034.9 feet, National Geodetic Vertical Datum; (2) an existing dam, consisting of: (a) a concrete non-overflow section, about 157 feet long, equipped with two control gates, (b) an intake section, about 96 feet long, (c) a gated spillway section, about 229 feet long, equipped with 7 Taintor gates, (d) a concrete non-overflow section, about 145 feet long, and (e) two earth dikes, with a combined length of about 200 feet; (4) an existing concrete forebay, about 100 feet by 245 feet; (5) two existing 12 foot-diameter steel penstockes, each about 65 feet long; (6) an existing reinforced concrete powerhouse, containing two turbine/generator units, each with a rating of 1,875 kilowatts (kW); (7) two existing 12 foot-diameter steel penstocks, each about 250 feet long; (8) an existing reinforced concrete powerhouse, containing two turbine/generator units, each with a rating of 8,000 kW, providing a total project installed capacity of 19,750 kW; and (9) appurtenant facilities.

1. With this Notice, we are initiating consultation with the *Wisconsin State Historic Preservation Officer (SHPO)* and the *Michigan State Historic Preservation Officer (SHPO),* as required by Section 106, National Historic Preservation Act, and the regulations of the Advisory Council on Historic Preservation, 36 CFR 800.4.

m. Pursuant to Section 4.32(b)(7) of 18 CFR of the Commission's regulations, if any resource agency, Indian Tribe, or person believes that an additional scientific study should be conducted in order to form an adequate factual basis for a complete analysis of the application on its merit, the resource agency, Indian Tribe, or person must file a request for a study with the Commission no later than 60 days from the issuance date of this notice and serve a copy of the request on the applicant.

Lois D. Cashell,

Secretary.

[FR Doc. 96–1041 Filed 4–24–96; 8:45 am]

BILLING CODE 6717–01–M

[Project No. 1980–009]

Wisconsin Electric Power Company; Notice Establishing Procedures for Relicensing and a Deadline for Submission of Final Amendments

April 19, 1996.

The license for the Big Quinnesec Falls Hydroelectric Project No. 1980, located on the Menominee River, in Florence and Marinette Counties, Wisconsin and Dickinson County, Michigan, expires on February 28, 1998. The statutory deadline for filing an application for new license is February 28, 1996. An application for new license has been filed by the applicant on February 27, 1996, as follows:

Project No.	Applicant	Contact
P–1980–009	Wisconsin Electric Power Company	Ms. Rita L. Hayen, P.E., 231 West Michigan Street, P.O. Box 2046, Milwaukee, WI 53201–2046.

The following is an approximate schedule and procedure that will be followed in processing the application:

Date	Action
June 24, 1996	Commission notifies applicant that its application has been accepted.
June 24, 1996	Commission issues a public notice of the accepted application establishing dates for filing motions to intervene and protests.
June 24, 1996	Commission's deadline for applicant for filing a final amendment, if any, to its application.

Any questions concerning this Notice should be directed to Patti Leppert-Slack at (202) 219–2767.

Lois D. Cashell,

Secretary.

[FR Doc. 96–10140 Filed 4–24–96; 8:45 am]

BILLING CODE 6717–01–M

[Docket No. GT96–57–000]

Pacific Gas Transmission Company; Notice of Proposed Changes in FERC Gas Tariff

April 19, 1996.

Take notice that on April 16, 1996, Pacific Gas Transmission Company (PGT) tendered for filing as part of its FERC Gas Tariff, First Revised Volume No. 1–A: Second Revised Sheet No. 1, and Third Revised Sheet No. 201; and as part of its FERC Gas Tariff, Fifth Revised Sheet No. 1 and Fourth Revised Sheet No. 171, to become effective May 17, 1996. The proposed changes would have no effect on revenues from jurisdictional service.

PGT asserts that the purpose of this filing is to remove from its tariff the Index of Shippers, pursuant to Order No. 582, issued October 11, 1995. PGT further states that on April 1, 1996 it posted an updated Index of Customers on its Electronic Bulletin Board.

PGT states that a copy of this filing has been served upon all jurisdictional customers and upon interest state regulatory agencies.

Any person desiring to be heard or protest said filing should file a motion to intervene or protest with the Federal Energy Regulatory Commission, Washington, DC 20426, in accordance with Sections 385.214 and 385.211 of the Commission's Rules of Practice and Procedure. All such motions or protests must be filed as provided in Section 154.210 of the Commission's Regulations. Protests will be considered by the Commission in determining the appropriate action to be taken, but will not serve to make protestants parties to the proceeding. Any person wishing to become a party must file a motion to intervene. Copies of this filing are on file with the Commission and are

available for public inspection in the Public Reference Room.

Lois D. Cashell,

Secretary.

[FR Doc. 96–10139 Filed 4–24–96; 8:45 am]

BILLING CODE 6717–01–M

[Docket No. CP96–335–000]

Colorado Interstate Gas Company; Notice of Petition for Declaratory Order

April 19, 1996.

Take notice that on April 17, 1996, Colorado Interstate Gas Company (CIG), Post Office Box 1087, Colorado Springs, Colorado 80944, filed in Docket No. CP96–335–000 a petition under Rule 207 of the Commission's Rules of Practice and Procedure (18 CFR 385.207) for a declaratory order determining that CIG is authorized: (i) to hold 79,071 Dth per day of capacity on Wyoming Interstate Company, Ltd. (WIC) and 10,000 Dth per day of capacity on Trailblazer Pipeline Company (Trailblazer) for shippers that have requested CIG obtain such capacity on their behalf and (ii) to hold 20,000 Dth per day of capacity on WIC for operational use, all as more fully set forth in the petition which is on file with the Commission and open to public inspection.

It is stated that WIC (an affiliate of CIG) originates in Sweetwater County, Wyoming, and terminates in Weld County, Colorado. WIC receives gas at interconnections in Sweetwater and Carbon Counties, Wyoming with CIG, Questar Pipeline Company, Overthrust Pipeline Company, and Western Gas Resources, Inc. CIG states that WIC delivers gas to CIG and Trailblazer in Weld County, Colorado.

CIG states that in January 1996, both Trailblazer and WIC posted on their electronic bulletin boards announcements of an open season during which interested shippers could submit requests for capacity on expansions that both pipelines were then considering.

It is stated that CIG submitted bids and was awarded capacity for two discrete parcels of WIC expansion capacity consisting of (i) 79,071 Dth/d to give shippers increased service options on CIG, and (ii) 20,000 Dth/d to support system operations on CIG. CIG contends that is also submitted a bid and was eventually awarded 10,000 Dth/d of expansion capacity on Trailblazer. CIG states that it has now signed a 10-year firm transportation agreement for the WIC capacity. It is stated that final execution of the comparable agreement is expected soon.

CIG states that its bids for the WIC and Trailblazer capacity were supported largely by other contracts executed by Shippers on CIG's own system who sought to have CIG hold such additional capacity in order to provide service for this amount.

It is stated that CIG has allocated the WIC/Trailblazer capacity to the following customers of CIG on the basis of their contracts with CIG for such capacity.

Customer	Quantity
Public Service Company of Colorado [1]	49,371 Dth/d
Colorado Springs Utilities	[1] 19,700 Dth/d
Snyder Oil Corporation [2]	10,000 Dth/d
Total	79,071 Dth/d

[1] Capacity on WIC only with terms ending September 30, 2001.

[2] Capacity on WIC and Trailblazer with a term of ten years from the in-service date of WIC and Trailblazer expansions.

CIG states that the 20,000 Dth/d parcel on WIC is to be held by CIG solely for operational purposes. It is stated that in its Order No. 636 compliance filing (Docket No. RS92–4), CIG provided a detailed showing of its need to retain 150 MMcf/d of WIC capacity to support system operations, which the Commission has approved.

It is stated that the same operational reasons for continued retention of the 150 MMcf/d of capacity on WIC,[3] along with additional data submitted in its petition, justify an additional 20,000 Dth/d of CIG capacity on WIC.

CIG states that its petition is in accordance with the Commission's policy on acquisition of capacity by an interstate pipeline on a third party pipeline set forth in *Texas Eastern Pipeline Corporation*, Docket No. CP95–218–000, 74 FERC ¶61,074 (1996). In addition, CIG requests that the Commission find that such capacity will be accorded rolled-in rate treatment.

Any person desiring to be heard or to make any protest with reference to said petition should on or before May 10, 1996, file with the Federal Energy Regulatory Commission, Washington, DC 20426, a motion to intervene or a protest in accordance with the requirements of the Commission's Rules of Practice and Procedure (18 CFR 385.214 or 385.211) and the Regulations under the Natural Gas Act (18 CFR 157.10). All protests filed with the Commission will be considered by it in determining the appropriate action to be taken but will not serve to make the protestants parties to the proceeding. Any person wishing to become a party to a proceeding or to participate as a party in any hearing therein must file a motion to intervene in accordance with the Commission's Rules.

[3] CIG states that in Docket No. RP95–114–000, 73 FERC ¶61,035 (1995), the Commission permitted CIG to retain its WIC capacity.

Lois D. Cashell,

Secretary.

[FR Doc. 96–10138 Filed 4–24–96; 8:45 am]

BILLING CODE 6717–01–M

[Docket No. RP96–212–000]

CNG Transmission Corporation; Notice of Section 4 Filing

April 19, 1996.

Take notice that on April 15, 1996, CNG Transmission Corporation (CNG), tendered for filing, pursuant to Section 4 of the Natural Gas Act, Revised Volume 1A of CNG Transmission's FERC Gas Tariff, to become effective May 15, 1996.

CNG further states that the filing is made pursuant to and in compliance with the Commission's order issued November 28, 1995, in Docket No. CP94–757 requiring the filing of revisions to Volume 1A to delete gathering lines abandoned by sale to Ashland Exploration, Inc.

CNG also states that deletions have been made to reflect all other sales and abandonments through the date of filing, including the recent abandonment by sale to Eastern States Oil & Gas, Inc. in Docket No. CP93–200 et al.

Any person desiring to be heard or to protest this filing should file a motion to intervene or protest with the Federal Energy Regulatory Commission, 888 First Street, N.E., Washington, D.C. 20426, in accordance with the requirements of the Commission's Rules and Regulations. All such motions or protests must be filed as provided in Section 154.210 of the Commission's Regulations. Protests will be considered by the Commission in determining the appropriate action to be taken, but will not serve to make the protestants parties to the proceedings. Any person wishing to become a party to the proceeding or to participate as a part in any hearing therein must file a motion to intervene. Copies of this filing are on file with the Commission and are available for public inspection in the Public Reference Room.

Lois D. Cashell,

Secretary.

[FR Doc. 96–10135 Filed 4–24–96; 8:45 am]

BILLING CODE 6717–01–M

[Docket No. CP96–308–000]

Northwest Pipeline Corporation; Notice of Request Under Blanket Authorization

April 19, 1996.

Take notice that on April 10, 1996, Northwest Pipeline Corporation (Northwest), 295 Chipeta Way, Salt Lake City, Utah 84108, filed in Docket No. CP96–308–000 a request pursuant to Sections 157.205, 157.216 and 157.211 of the Commission's Regulations under the Natural Gas Act (18 CFR 157.205, 157.216 and 157.211) for authorization to abandon an existing obsolete, undersized meter and to construct and operate an upgraded replacement meter at the Mancos Meter Station in Montezuma County, Colorado, under Northwest's blanket certificate issued in Docket No. CP82–433–000 pursuant to Section 7 of the Natural Gas Act, all as more fully set forth in the request that is on file with the Commission and open to public inspection.

Northwest proposes to upgrade the meter station by removing the existing 2-inch positive displacement meter and appurtenances and installing a new 2-inch positive displacement meter and appurtenances. The maximum design capacity of the meter station will increase from 233 Dth per day to approximately 438 Dth per day at 150 psig. The estimated upgrade cost is $79,680 ($69,680 for installation of new facilities and $10,000 for removal of the old). Northwest states that this proposal will better accommodate existing firm maximum daily delivery obligations at this delivery point to Greeley Gas Company. Northwest has stated that its existing FERC Gas Tariff does not prohibit the proposed upgrading; that there will be no impact on Northwest's system peak day or annual deliveries; and, that there is sufficient capacity to accomplish deliveries without detriment or disadvantage to existing customers.

Any person or the Commission's staff may, within 45 days after issuance of the instant notice by the Commission, file pursuant to Rule 214 of the Commission's Procedural Rules (18 CFR 385.214) a motion to intervene or notice of intervention and pursuant to Section 157.205 of the Regulations under the Natural Gas Act (18 CFR 157.205) a protest to the request. If not protest is filed within the time allowed therefor, the proposed activity shall be deemed to be authorized effective the day after the time allowed for filing a protest. If a protest is filed and not withdrawn within 30 days after the time allowed for filing a protest, the instant request shall be treated as an application for authorization pursuant to Section 7 of the Natural Gas Act.

Lois D. Cashell,

Secretary.

[FR Doc. 96–10136 Filed 4–24–96; 8:45 am]

BILLING CODE 6717–01–M

[Docket No. CP96–313–000]

Williams Natural Gas Company; Notice of Request Under Blanket Authorization

April 19, 1996

Take notice that on April 12, 1996, Williams Natural Gas Company (Williams), P.O. Box 3288, Tulsa, Oklahoma 74101, filed in Docket No. CP96–313–000 a request pursuant to Section 157.205 and 157.212 of the Commission's Regulations under the Natural Gas Act (18 CFR 157.205 and 157.212) for authorization to operate in interstate commerce certain facilities that were previously constructed and operated to effectuate transportation service pursuant to Section 311 of the Natural Gas Policy Act (NGPA). Williams makes such request, under its blanket certificate issued in Docket No. CP82–479–000 pursuant to Section 7 of the Natural Gas Act, all as more fully set forth in the request on file with the Commission and open to public inspection.

Specifically, Williams is proposing to use a delivery facility that was installed in Mitchell County, Kansas, for purposes other than Section 311 transport. It is stated that the subject facilities were constructed to enable Williams to perform NGPA Section 311 transportation to Western Resources, Inc. (WRI) for use by Plum Creek Farms (Plum Creek). The Section 311 facilities consist of a 2-inch tap, metering, regulating and appurtenant facilities. Williams states that it commenced gas delivery to WRI for Plum Creek on December 14, 1995. Williams states that the volumes of gas that will be delivered to WRI for Plum Creek, after approval of the request herein, will not exceed WRI's existing entitlements.

Williams declares that such a change in facility use is not prohibited by its existing tariff, and that Williams has sufficient capacity to accomplish the delivery specified without detriment or disadvantage to its other customers. It is stated that WRI reimbursed Williams the $4,451 construction cost of the subject facilities.

Any person or the Commission's staff may, within 45 days after issuance of the instant notice by the Commission, file pursuant to Rule 214 of the Commission's Procedural Rules (18 CFR 385.214) a motion to intervene a notice of intervention and pursuant to Section 157.205 of the Regulations under the Natural Gas Act (18 CFR 157.205) a protest to the request. If no protests filed within the time allowed therefor, the proposed activity shall be deemed to be authorized effective the day after the time allowed for filing a protest. If a protest is filed and not withdrawn within 30 days after the time allowed for filing a protest, the instant request shall be treated as an application for authorization pursuant to Section 7 of the Natural Gas Act.

Lois D. Cashell,

Secretary.

[FR Doc. 96–10137 Filed 4–24–96; 8:45 am]

BILLING CODE 6717–01–M

[Docket No. EC96–18–000, et al.]

Great Bay Power Corporation, et al.; Electric Rate and Corporate Regulation Filings

April 18, 1996.

Take notice that the following filings have been made with the Commission:

1. Great Bay Power Corporation

[Docket No. EC96–18–000]

Take notice that on April 11, 1996, Great Bay Power Corporation (Great Bay), submitted an application pursuant to § 203 of the Federal Power Act for authority to effect a ''disposition of facilities'' that would be deemed to occur as a result of implementation of a proposed holding company structure, all as more fully set forth in the application, which is on file with the Commission and open to public inspection.

The application states that implementation of the holding company structure proposed would be accomplished through the creation of a holding company (Holding Company) of which Great Bay would be a subsidiary. It is stated that the proposed holding company structure is intended to facilitate the separation of Great Bay's activities as an exempt wholesale generator (EWG), as that term is defined under Section 32 of the Public Utility Holding Company Act of 1935, from any other business. Such separation will permit Holding Company to engage in business activities through subsidiaries other than Great Bay, which Great Bay is prohibited from engaging in due to its status as an EWG.

Comment date: May 9, 1996, in accordance with Standard Paragraph E at the end of this notice.

2. Illinois Power Company

[Docket No. ER96–1537–000]

Take notice that on April 9, 1996, Illinois Power Company (Illinois Power), 500 South 27th Street, Decatur, Illinois 62525, tendered for filing an Addendum to the Interchange Agreement between Illinois Power and Kentucky Utilities Company (KU) dated January 1, 1983. The addendum cancels Service Schedule E, Excess Energy, and adds Service Schedule E, Term Energy. Illinois Power states that the addendum provides more flexibility under the Interchange Agreement.

Illinois Power has requested an effective date of June 9, 1996.

Comment date: May 2, 1996, in accordance with Standard Paragraph E at the end of this notice.

3. Public Service Company of Colorado

[Docket No. ER96–1538–000]

Take notice that on April 10, 1996, Public Service Company of Colorado (Public Service), tendered for filing a Service Agreement for Non-Firm Transmission Service between Public Service Company of Colorado (Public Service) and UtiliCorp United Inc. (UtiliCorp). Public Service states that the purpose of this filing is to provide Non-Firm Transmission Service in accordance with its Point-to-Point Transmission Service Tariff. Public Service requests that this filing be made effective as of March 18, 1996.

Comment date: May 2, 1996, in accordance with Standard Paragraph E at the end of this notice.

4. Wisconsin Power and Light Company

[Docket No. ER96–1539–000]

Take notice that on April 10, 1996, Wisconsin Power and Light Company (WP&L), tendered for filing an Agreement dated April 2, 1996, establishing Aquila Power Corporation as a customer under the terms of WP&L's Point-to-Point Transmission Tariff.

WP&L requests an effective date of April 2, 1996 and accordingly seeks waiver of the Commission's notice requirements. A copy of this filing has been served upon the Public Service Commission of Wisconsin.

Comment date: May 2, 1996, in accordance with Standard Paragraph E at the end of this notice.

5. Cinergy Services, Inc.

[Docket No. ER96–1540–000]

Take notice that on April 10, 1996, Cinergy Services, Inc. (Cinergy), tendered for filing on behalf of its operating companies, The Cincinnati Gas & Electric Company (CG&E) and PSI Energy, Inc. (PSI), an Interchange Agreement, dated April 1, 1996 between Cinergy, CG&E, PSI and Federal Energy Sales, Inc. (FES).

The Interchange Agreement provides for the following service between Cinergy and FES:

1. Exhibit A—Power Sales by FES
2. Exhibit B—Power Sales by Cinergy

Cinergy and FES have requested an effective date of April 15, 1996.

Copies of the filing were served on Federal Energy Sales, Inc., the Kentucky Public Service Commission, the Public Utility Commission of Ohio and the Indiana Utility Regulatory Commission.

Comment date: May 2, 1996, in accordance with Standard Paragraph E at the end of this notice.

6. Commonwealth Electric Company
Cambridge Electric Light Company

[Docket No. ER96–1541–000]

Take notice that on April 10, 1996, Commonwealth Electric Company (Commonwealth) on behalf of itself and Cambridge Electric Light Company (Cambridge), collectively referred to as the ''Companies'', tendered for filing with the Federal Energy Regulatory Commission executed Service Agreements between the Companies and the following Customers:

Gateway Energy Inc.
PanEnergy Power Services, Inc.

These Service Agreements specify that the Customers have signed on to and have agreed to the terms and conditions of the Companies' Power Sales and Exchanges Tariffs designated as Commonwealth's Power Sales and Exchanges Tariff (FERC Electric Tariff Original Volume No. 3) and Cambridge's Power Sales and Exchanges Tariff (FERC Electric Tariff Original Volume No. 5). These Tariffs, approved by FERC, on April 13, 1995, and which have an effective date of March 20, 1995, will allow the Companies and the Customers to enter into separately scheduled transactions under which the Companies will sell to the Customers capacity and/or energy as the parties may mutually agree.

The Companies request an effective date as specified on each Service Agreement.

Comment date: May 2, 1996, in accordance with Standard Paragraph E at the end of this notice.

7. PECO Energy Company

[Docket No. ER96–1542–000]

Take notice that on April 11, 1996, PECO Energy Company (PECO), filed a Service Agreement dated April 4, 1996, with Southern Energy Marketing, Inc. (SEM) under PECO's FERC Electric Tariff Original Volume No. 1 (Tariff). The Service Agreement adds SEM as a customer under the Tariff.

PECO requests an effective date of April 4, 1996, for the Service Agreement.

PECO states that copies of this filing have been supplied to SEM and to the Pennsylvania Public Utility Commission.

Comment date: May 2, 1996, in accordance with Standard Paragraph E at the end of this notice.

8. PECO Energy Company

[Docket No. ER96–1543–000]

Take notice that on April 11, 1996, PECO Energy Company (PECO), filed a Service Agreement dated March 4, 1996, with City of Lakeland, Department of Electric and Water Utilities (Lakeland) under PECO's FERC Electric Tariff Original Volume No. 1 (Tariff). The Service Agreement adds Lakeland as a customer under the Tariff.

PECO requests an effective date of March 15, 1996, for the Service Agreement.

PECO states that copies of this filing have been supplied to Lakeland and to the Pennsylvania Public Utility Commission.

Comment date: May 2, 1996, in accordance with Standard Paragraph E at the end of this notice.

9. PECO Energy Company

[Docket No. ER96–1544–000]

Take notice that on April 11, 1996, PECO Energy Company (PECO), filed a Service Agreement dated April 4, 1996, with Cleveland Public Power (CPP) under PECO's FERC Electric Tariff Original Volume No. 1 (Tariff). The Service Agreement adds CPP as a customer under the Tariff.

PECO requests an effective date of April 4, 1996, for the Service Agreement.

PECO states that copies of this filing have been supplied to CPP and to the Pennsylvania Public Utility Commission.

Comment date: May 2, 1996, in accordance with Standard Paragraph E at the end of this notice.

10. Wisconsin Electric Power Company

[Docket No. ER96–1545–000]

Take notice that on April 11, 1996, Wisconsin Electric Power Company (Wisconsin Electric), tendered for filing amendments to Service Agreement Nos. 25 and 27 under its FERC Electric Tariff, Original Volume No. 1.

Wisconsin Electric requests a waiver of the Commission's advance notice

requirements to permit an effective date of January 1, 1996, to effectuate the rate decreases contained therein. Wisconsin Electric is authorized to state that the Badger Power Marketing Authority of Wisconsin, Inc. (BPMA) and the Oconto Falls Water & Light Commission (Oconto Falls) support the proposed effective date.

Copies of the filing have been served on BPMA, Oconto Falls, and the Public Service Commission of Wisconsin.

Comment date: May 2, 1996, in accordance with Standard Paragraph E at the end of this notice.

11. Niagara Mohawk Power Corporation

[Docket No. ER96–1546–000]

Take notice that on April 11, 1996, Niagara Mohawk Power Corporation (NMPC), tendered for filing with the Federal Energy Regulatory Commission an executed Service Agreement between NMPC and KN Marketing, Inc. (KN). This Service Agreement specifies that KN has signed on to and has agreed to the terms and conditions of NMPC's Power Sales Tariff designated as NMPC's FERC Electric Tariff, Original Volume No. 2. This Tariff, approved by FERC on April 15, 1994, and which has an effective date of March 13, 1993, will allow NMPC and KN to enter into separately scheduled transactions under which NMPC will sell to KN capacity and/or energy as the parties may mutually agree.

In its filing letter, NMPC also included a Certificate of Concurrence executed by the Purchaser.

NMPC requests an effective date of April 1, 1996. NMPC has requested waiver of the notice requirements for good cause shown.

NMPC has served copies of the filing upon the New York State Public Service Commission and KN.

Comment date: May 2, 1996, in accordance with Standard Paragraph E at the end of this notice.

12. New York State Electric & Gas Corporation

[Docket No. ER96–1547–000]

Take notice that on April 11, 1996, New York State Electric & Gas Corporation (NYSEG), tendered for filing pursuant to § 35.12 of the Federal Energy Regulatory Commission's Regulations, 18 CFR 35.12, as an initial rate schedule, an agreement with Eastex Power Marketing, Inc. (Eastex). The agreement provides a mechanism pursuant to which the parties can enter into separately scheduled transactions under which NYSEG will sell to Eastex and Eastex will purchase from NYSEG either capacity and associated energy or energy only as the parties may mutually agree.

NYSEG requests that the agreement become effective on April 12, 1996, so that the parties may, if mutually agreeable, enter into separately scheduled transactions under the agreement. NYSEG has requested waiver of the notice requirements for good cause shown.

NYSEG served copies of the filing upon the New York State Public Service Commission and Eastex.

Comment date: May 2, 1996, in accordance with Standard Paragraph E at the end of this notice.

13. Cinergy Services, Inc.

[Docket No. ER96–1548–000]

Take notice that on April 11, 1996, Cinergy Services, Inc. (Cinergy), tendered for filing on behalf of its operating company, PSI Energy, Inc. (PSI), a First Supplemental Agreement, dated March 1, 1996, to the Interconnection Agreement, dated June 1, 1994, between Enron Power Marketing, Inc., (Enron) and PSI.

The First Supplemental Agreement revises the definitions for Emission Allowances and provides for Cinergy Services to act as agent for PSI. The following Exhibit has also been revised:

B Power Sales by Cinergy

Cinergy and Enron have requested an effective date of April 15, 1996.

Copies of the filing were served on Enron Power Marketing, Inc., the Texas Public Utility Commission, the Kentucky Public Service Commission, Public Utilities Commission of Ohio and the Indiana Utility Regulatory Commission.

Comment date: May 2, 1996, in accordance with Standard Paragraph E at the end of this notice.

14. MidAmerican Energy Company

[Docket No. ER96–1549–000]

Take notice that on April 9, 1996, MidAmerican Energy Company, tendered for filing proposed changes in its Point-to-Point Transmission Tariff, FERC Electric Tariff, Original Volume No. 4. The proposed changes consist of First Revised Sheet No. 75, superseding Original Sheet No. 75; First Revised Sheet No. 76, superseding Original Sheet No. 76; First Revised Sheet No. 102, superseding Original Sheet No. 102; and Original Sheet No. 103.

MidAmerican states that it is submitting these changes in compliance with the Commission's March 29, 1996, order in Docket Nos. ER95–1542–001, ER95–188–002 and EL96–38–000 and to provide an index of customers under the tariff.

Copies of the filing were served upon MidAmerican's jurisdictional customers under the tariff, the Iowa Utilities Board, the Illinois Commerce Commission, the South Dakota Public Utilities Commission and all parties to Docket Nos. ER95–1542–001, ER95–188–002 and EL96–38–000.

Comment date: May 2, 1996, in accordance with Standard Paragraph E at the end of this notice.

15. Midwest Energy, Inc.

[Docket No. ER96–1550–000]

Take notice that on April 9, 1996, Midwest Energy, Inc. (Midwest), tendered for filing with the Federal Energy Regulatory Commission First Revised Sheet No. 38 to its FERC Network Transmission Tariff, Schedule 2 entitled Loss Compensation Service and First Revised Sheet No 40. to its FERC Point-to-Point Transmission Tariff, Schedule 1 entitled Loss Compensation Service. Midwest has requested waiver of the 60-day notice period and proposed that these tariff sheets be effective one day after filing.

Midwest states that the purpose of the instant filing is to supplement Midwest's July 10, 1995, Network Transmission Tariff Sheet No. 38 and its Point-to-Point Transmission Tariff Sheet No. 40 in Docket No. ER95–590–000 in order to correct an error in the Demand Loss Charges under both the Network Transmission Tariff and the Point-to-Point Transmission Tariff. It has come to Midwest's attention that the demand loss charges set forth on Original Sheet No. 38 of the Network Transmission Tariff and Original Sheet 40 of the Point-to-Point Transmission Tariff contain typographical errors. Midwest states that the underlying cost justification included in the original filing contains the correct demand loss charges however, the demand loss charges on Original Sheet No. 38 of the Network Transmission Tariff and Original Sheet No. 40 of the Point-to-Point Transmission were transposed incorrectly.

Therefore, in order to correct these errors, Midwest states that it is submitting the instant filing First Revised Sheet No. 38 to its Network Transmission Tariff and First Revised Sheet No. 40 to its Point-to-Point Transmission Tariff which reflects the correct demand loss charges.

Midwest states that it is serving copies of the instant filing to its customers, State Commissions and other interested parties in Docket No. ER95–590–000.

Comment date: May 2, 1996, in accordance with Standard Paragraph E at the end of this notice.

16. Public Service Company of New Mexico

[Docket No. ER96–1551–000]

Take notice that on April 11, 1996, Public Service Company of New Mexico (PNM), submitted for filing pursuant to § 205 of the Federal Power Act its proposed Network Integration Service Transmission Tariff, its proposed Point-to-Point Transmission Service Tariff, and its proposed Power and Energy Sales Tariff. PNM states that the two transmission service tariffs are consistent with the tariffs contained in the Commission's Notice of Proposed Rulemaking in Docket No. RM95–8–000. The cost of service is the same as the cost of service filed on April 1, 1996 in Docket No. ER96–1462–000. PNM states that it has no market power in generation based upon its open access tariffs, and requests approval to sell power and energy at market-based rates. PNM's filing is available for public inspection at its offices in Albuquerque, New Mexico.

Comment date: May 2, 1996, in accordance with Standard Paragraph E at the end of this notice.

17. The Dayton Power and Light Company

[Docket No. ER96–1552–000]

Take notice that on April 12, 1996, The Dayton Power and Light Company (Dayton), tendered for filing under § 205 of the Federal Power Act an application requesting the Commission to accept and place into effect open access point-to-point and network integration transmission tariffs that substantially conform to the Commission's Notice of Proposed Rulemaking in Docket No. RM95–8–000, 70 FERC ¶ 61,357 (1995). Dayton requests that its tariffs be placed into effect as of June 11, 1996.

A copy of this filing was served upon the Public Utilities Commission of Ohio.

Comment date: May 2, 1996, in accordance with Standard Paragraph E at the end of this notice.

18. Oklahoma Gas and Electric Company

[Docket No. ER96–1553–000]

Take notice that on April 12, 1996, Oklahoma Gas and Electric Company, tendered for filing a proposed Supplemental Power Purchase Agreement with the Oklahoma Municipal Power Authority (OMPA).

Copies of this filing have been sent to OMPA, the Oklahoma Corporation Commission, and the Arkansas Public Service Commission.

Comment date: May 2, 1996, in accordance with Standard Paragraph E at the end of this notice.

19. Portland General Electric Company Southern California Edison Company

[Docket No. ER96–1554–000]

Take notice that on April 12, 1996, Portland General Electric Company and Southern California Edison Company submitted a settlement in the form of a Termination Agreement involving the July 31, 1996, Long-Term Power Sale and Exchange Agreement.

Comment date: May 2, 1996, in accordance with Standard Paragraph E at the end of this notice.

20. Selkirk Cogen Partners, L.P.

[Docket No. QF89–274–013]

On April 9, 1996, Selkirk Cogen Partners, L.P. (Applicant) submitted for filing an amendment to its filing in this docket.

The amendment provides additional information pertaining to the technical aspects of its cogeneration facility. No determination has been made that the submittal constitutes a complete filing.

Comment date: May 9, 1996, in accordance with Standard Paragraph E at the end of this notice.

Standard Paragraph

E. Any person desiring to be heard or to protest said filing should file a motion to intervene or protest with the Federal Energy Regulatory Commission, 888 First Street, N.E., Washington, D.C. 20426, in accordance with Rules 211 and 214 of the Commission's Rules of Practice and Procedure (18 CFR 385.211 and 18 CFR 385.214). All such motions or protests should be filed on or before the comment date. Protests will be considered by the Commission in determining the appropriate action to be taken, but will not serve to make protestants parties to the proceeding. Any person wishing to become a party must file a motion to intervene. Copies of this filing are on file with the Commission and are available for public inspection.

Lois D. Cashell,

Secretary.

[FR Doc. 96–10205 Filed 4–24–96; 8:45 am]

BILLING CODE 6717–01–P

[Project Nos. 2612–005, et al.]

Hydroelectric Applications [Central Maine Power Company, et al.]; Notice of Applications

Take notice that the following hydroelectric applications have been filed with the Commission and are available for public inspection:

1a. Type of Application: New Major License.

b. Project No.: P–2612–005.

c. Date Filed: December 28, 1995.

d. Applicant: Central Maine Power Company.

e. Name of Project: Flagstaff Hydro Project.

f. Location: On the Dead River, in Somerset and Franklin Counties, Maine.

g. Filed Pursuant to: Federal Power Act, 16 U.S.C. 791(a)–825(r).

h. Applicant Contact: F. Allen Wiley, Central Maine Power Company, 41 Anthony Avenue, Augusta, ME 04330, (207) 621–4412.

i. FERC Contact: Ed Lee (202) 219–2809.

j. Comment Date: June 14, 1996.

k. Status of Environmental Analysis: This application has been accepted for filing but is not ready for environmental analysis at this time—see attached standard paragraph E1.

l. Description of Project: The project consists of the following: (1) An existing reservoir with a surface area of 17,950 acres and a usable storage volume of about 275,182 acre-feet at the normal maximum elevation of 1,146.0 feet, United States Geological Service (USGS) datum; (2) an existing dam, consisting of: (a) an earth embankment section, about 694 feet long, topped with a wave barrier constructed of concrete ''Jersey'' highway barricades, (b) a concrete retaining wall, 3 feet thick and about 183 feet long, located at the west end of the earth embankment parallel to the flow of the river, (c) a concrete fishway section, about 19 feet long, (d) a concrete deep gate section, about 35 feet long, consisting of two deep (Broome) gates, each five-foot by seven-foot, (e) a concrete log sluice section, about 10 feet long, (f) a concrete gated section, about 125 feet long, containing five Taintor gates, each twenty feet wide, separated by five-foot piers, and (g) a concrete overflow section (uncontrolled spillway section), about 450 feet long, topped with two foot high flashboards; and (3) existing appurtenant facilities. The Flagstaff Hydro Project is operated as a water storage facility and the applicant is not proposing any new facilities or construction.

m. Purpose of Project: Project power is utilized in the applicant's power generation system.

n. This notice also consists of the following standard paragraphs: B1 and E1.

o. Available Location of Application: A copy of the application, as amended and supplemented, is available for inspection and reproduction at the Commission's Public Reference and Files Maintenance Branch, located at 888 First Street, N.E., Room 2A, Washington, D.C., 20426, or by calling (202) 208–1371. A copy is also available for inspection and reproduction at Central Maine Power Company, 41 Anthony Avenue, Augusta, ME 04330, or by calling (207) 621–4412.

2a. Type of Application: Minor License.

b. Project No.: 11546–000.

c. Date filed: May 31, 1995.

d. Applicant: City of Thief River Falls Municipal Utilities.

e. Name of Project: Municipal Power Dam.

f. Location: On Red Lake River in the City of Thief River Falls, Pennington County, Minnesota.

g. Filed Pursuant to: Federal Power Act 16 U.S.C. 791 (a)–825(r).

h. Applicant Contact: Arlo L. Rude, P.O. Box 528, Thief River Falls, MN 56701, (218) 681–5816.

i. FERC Contact: Charles T. Raabe (202) 219–2811.

j. Deadline Date: June 13, 1996.

k. Status of Environmental Analysis: This application is not ready for environmental analysis at this time—see attached paragraph D8.

l. Description of Project: The existing, operating project consists of: (1) a 193-foot-long, 24.5-foot-high concrete gravity dam, having three 17.75-foot-wide, 11-foot-high steel tainter gates and four overflow sections with flashboards; (2) a 4.4-mile-long reservoir having a 160-acre surface area and a storage capacity of approximately 1,133 acre-feet at normal summer pool elevation 1115.3 feet; (3) a concrete and brick powerhouse containing one 250-kW generating unit and one 300-kW generating unit operated at a 15-foot head; and (4) appurtenant facilities.

Project facilities are owned by the applicant. The project's annual energy production has averaged 2,500,000-kWh. Energy produced by the project is used within applicant's system.

m. This notice also consists of the following standard paragraphs: A2, A9, B1, and D8.

n. Available Locations of Application: A copy of the application, as amended and supplemented, is available for inspection and reproduction at the Commission's Public Reference and Files Maintenance Branch, located at 888 First Street, N.E., Washington, D.C. 20426, (202) 208–1371. A copy is also available for inspection and reproduction at the City of Thief River Falls Municipal Utilities, P.O. Box 528, Thief River Falls, MN 56701, (218) 681–5816.

3a. Type of Application: Minor License.

b. Project No.: 11547–000.

c. Date Filed: June 5, 1995.

d. Applicant: Summit Hydropower.

e. Name of Project: Hale.

f. Location: On the Quinebaug River in the Town of Putnam, Windham County, Connecticut.

g. Filed Pursuant to: Federal Power Act, 16 U.S.C. 791(a)–825(r).

h. Applicant Contact: Mr. Duncan S. Broatch, 92 Rocky Hill Road, Woodstock, CT 06281, (860) 974–1620.

i. FERC Contact: Charles T. Raabe (tag) (202) 219–2811.

j. Deadline Date: June 14, 1996.

k. Status of Environmental Analysis: This application is not ready for environmental analysis at this time—see attached paragraph D8.

l. Description of Project: The proposed project would consist of: (1) the 130-foot-long, 24-foot-high Putnam Dam; (2) the reservoir having a 13-acre surface-area and a gross storage capacity of 65 acre-feet at normal surface elevation 253.42 feet m.s.l.; (3) the intake structure having four 3-foot-wide, 5-foot-high wooden head gates; (4) the tunnel forebay having new trashracks; (5) the water conveyance tunnel; (6) the penstock forebay; (7) a relined 7.5-foot-diameter, 100-foot-long steel pentock; (8) the powerhouse containing a new 440-kW generating unit, (9) the 800-foot-long tailrace; (10) transformers; (11) a new 50-foot-long, 480-volt overhead transmission line; and (12) appurtenant facilities.

The project dam is owned by the Town of Putnam, CT. Applicant estimates that the project's average annual energy production would be 2,363,000-kWh. Project energy would be sold to Connecticut Light and Power Company.

m. This notice also consists of the following standard paragraphs: A2, A9, B1, and D8.

n. Available Locations of Application: A copy of the application, as amended and supplemented, is available for inspection and reproduction at the Commission's Public Reference and Files Maintenance Branch, located at 888 First Street, N.E., Washington, D.C. 20426, (202) 208–1371. A copy is also available for inspection and reproduction at 92 Rocky Hill Road, Woodstock, CT (860) 974–1620 and at the Killingly Public Library, 25 Wescott Road, Danielson, CT 06239.

4a. Type of Application: Exemption of Small Conduit Hydroelectric Facility.

b. Project No.: 11576–000.

c. Date filed: March 29, 1996.

d. Applicant: Mojave Water Agency.

e. Name of Project: Rock Springs Hydroelectric Project.

f. Location: On the Mojave River, near the town of Hesperia, in San Bernardino County, California.

g. Filed Pursuant to: Federal Power Act, 16 U.S.C. 791(a)–825(r).

h. Applicant Contact: Mr. Lucien G. Hersh, Bechtel, 50 Beale Street, San Francisco, CA 94119–3965.

i. FERC Contact: Mr. Michael Strzelecki, (202) 219–2827.

j. Description of Project: The Rock Springs Project would utilize the approximately 25,000 acre-feet of flow annually discharged from the California Aqueduct into the Mojave River at the Morongo Basin pipeline turnout, which is part of the Upper Mojave River Recharge Project. This flow is discharged into the Mojave River to help recharge the groundwater aquifer there.

The project would consist of an 80-foot-long penstock bifurcating from the applicant's existing Morongo Basin pipeline, a powerhouse with a 2.6–MW generating unit, and a 1,600-foot-long tailrace returning water to the Mojave River. The project will tie into Southern California Edison's existing transmission corridor.

k. With this notice, we are initiating consultation with the *STATE HISTORIC PRESERVATION OFFICER (SHPO),* as required by § 106, National Historic Preservation Act, and the regulations of the Advisory Council on Historic Preservation, 36 CFR 800.4.

l. Under Section 4.32(b)(7) of the Commission's regulations (18 CFR), if any resource agency, SHPO, Indian Tribe, or person believes that the applicant should conduct an additional scientific study to form an adequate factual basis for a complete analysis of the application on its merits, they must file a request for the study with the Commission not later than 60 days after the application is filed, and must serve a copy of the request on the applicant.

5a. Type of Application: Preliminary Permit.

b. Project No.: 11575–000.

c. Date filed: March 7, 1996.

d. Applicant: Akron Hydroelectric Company.

e. Name of Project: Riverfront Parkway Project.

f. Location: On the Cuyahoga River, in the city of Cuyahoga, Summit County, Ohio.

g. Filed Pursuant to: Federal Power Act 16 U.S.C. 791 (a)–825(r).

h. Applicant Contact: Mr. Allan M. Kuivila, P.E., Akron Hydroelectric Company P.O. Box 232, Cuyahoga Falls, Ohio 44222–0232, (216) 929–1675.

i. FERC Contact: Mary Golato (202) 219–2804.

j. Comment Date: June 20, 1996.

k. Description of Project: The proposed project would consist of the following facilities: (1) An existing dam 100 feet wide and approximately 13 to 14 feet high; (2) an existing reservoir with a surface elevation of approximately 990 feet mean sea level, and a surface area of approximately 28.5 acres with negligible storage capacity; (3) an existing double-chambered flume; (4) existing headworks; (5) an existing powerhouse containing two new turbine-generator units having a total capacity of 850 kilowatts; (6) an existing tailrace; (7) the remains of an adjacent hydraulic raceway; (8) a proposed underground transmission line 265 feet long; and (9) appurtenant facilities. The dam is owned by the City of Cuyahoga Falls. The average annual generation is estimated to be 2,000,000 kilowatthours. The cost of the studies under the permit will be approximately $10,000.

l. This notice also consists of the following standard paragraphs: A5, A7, A9, A10, B, C, and D2.

In responding, commenters may submit a copy of their comments on a 3½-inch diskette formatted for MS–DOS based computers. In light of our ability to translate MS–DOS based materials, the text need only be submitted in the format and version that it was generated (i.e., MS Word, WordPerfect 5.1/5.2, ASCII, etc.). It is not necessary to reformat word processor generated text to ASCII. For Macintosh users, it would be helpful to save the documents in Macintosh word processor format and then write them to files on a diskette formatted for MS–DOS machines.

6a. Type of Application: Major New License.

b. Project No.: 1991–009.

c. Date filed: April 1, 1996.

d. Applicant: City of Bonners Ferry, Idaho.

e. Name of Project: Moyie River Hydroelectric Project.

f. Location: On the Moyie River in Boundary County, Idaho near the town of Moyie Springs and city of Bonners Ferry. The project is partially location on lands administered by the Idaho Panhandle National Forest. T62N,R2E, sections 11, 2, and 14, Boise Meridian.

g. Filed Pursuant to: Federal Power Act, 16 U.S.C. 791(a)–825(r).

h. Applicant Contact:

Mike Woodward, P.E., City Administrator, City Bonners Ferry, P.O. Box 149, 7232

Main Street, Bonners Ferry, ID 83805, (208) 267–3105

John G. Lincoln, P.E., CH2M Hill, P.O. Box 8748, 700 Clearwater Lane, Boise, ID 83707–2748, (208) 345–5310

i. FERC Contact: Ms. Deborah Frazier-Stutely (202) 219–2842.

j. *Brief Description of Existing Project:* The existing project consists of: (1) a 92-foot-high, 376-foot-long concrete dam on the Moyie River, with a 117-foot-long ogee spillway in the center of the dam; impounding (2) a reservoir with a storage area of 30.5 acres; (3) an intake structure and trashrack; (4) a 990-foot-long combination penstock/pressure tunnel system, leading to; (5) the three powerhouses each containing generating unit(s) rated at 450, 1,500 and 2,000 kilowatts, respectively; (6) a tailrace; (7) a 13.8-kilovolt transmission line; and (8) related facilities.

There are no proposed modifications to project facilities or operations at this time.

k. With this notice, we are initiating consultation with the State Historic Preservation Officer (SHPO), as required by § 106, of the National Historic Preservation Act, and the regulations of the Advisory Council on Historic Preservation, 36 CFR 800.4.

l. In accordance with section 4.32(b)(7) of the Commission's regulations, if any resource agency, SHPO, Indian Tribe, or person believes that an additional scientific study should be conducted in order to form an adequate, factual basis for a complete analysis of this application on its merits, they must file a request for the study with the Commission, together with justification for such request, not later than 60 days from the filing date and serve a copy of the request on the Applicant.

m. The Commission's deadline for the applicant's filing of a final amendment to this application is also 60 days from the filing date.

Standard Paragraphs

A2. Development Application—Any qualified applicant desiring to file a competing application must submit to the Commission, on or before the specified deadline date for the particular application, a competing development application, or a notice of intent to file such an application. Submission of a timely notice of intent allows an interested person to file the competing development application no later than 120 days after the specified deadline date for the particular application. Applications for preliminary permits will not be accepted in response to this notice.

A5. Preliminary Permit—Anyone desiring to file a competing application for preliminary permit for a proposed project must submit the competing application itself, or a notice of intent to file such an application, to the Commission on or before the specified comment date for the particular application (see 18 CFR 4.36). Submission of a timely notice of intent allows an interested person to file the competing preliminary permit application no later than 30 days after the specified comment date for the particular application. A competing preliminary permit application must conform with 18 CFR 4.30(b) and 4.36.

A7. Preliminary Permit—Any qualified development applicant desiring to file a competing development application must submit to the Commission, on or before a specified comment date for the particular application, either a competing development application or a notice of intent to file such an application. Submission of a timely notice of intent to file a development application allows an interested person to file the competing application no later than 120 days after the specified comment date for the particular application. A competing license application must conform with 18 CFR 4.30(b) and 4.36.

A9. Notice of intent—A notice of intent must specify the exact name, business address, and telephone number of the prospective applicant, and must include an unequivocal statement of intent to submit, if such an application may be filed, either a preliminary permit application or a development application (specify which type of application). A notice of intent must be served on the applicant(s) named in this public notice.

A10. Proposed Scope of Studies under Permit—A preliminary permit, if issued, does not authorize construction. The term of the proposed preliminary permit would be 36 months. The work proposed under the preliminary permit would include economic analysis, preparation of preliminary engineering plans, and a study of environmental impacts. Based on the results of these studies, the Applicant would decide whether to proceed with the preparation of a development application to construct and operate the project.

B. Comments, Protests, or Motions to Intervene—Anyone may submit comments, a protest, or a motion to intervene in accordance with the requirements of Rules of Practice and Procedure, 18 CFR 385.210, .211, .214. In determining the appropriate action to take, the Commission will consider all protests or other comments filed, but only those who file a motion to intervene in accordance with the Commission's Rules may become a party to the proceeding. Any comments, protests, or motions to intervene must be received on or before the specified comment date for the particular application.

B1. Protests or Motions to Intervene—Anyone may submit a protest or a motion to intervene in accordance with the requirements of Rules of Practice and Procedure, 18 CFR 385.210, 385.211, and 385.214. In determining the appropriate action to take, the Commission will consider all protests filed, but only those who file a motion to intervene in accordance with the Commission's Rules may become a party to the proceeding. Any protests or motions to intervene must be received on or before the specified deadline date for the particular application.

C. Filing and Service of Responsive Documents—Any filings must bear in all capital letters the title ''COMMENTS'', ''NOTICE OF INTENT TO FILE COMPETING APPLICATION'', ''COMPETING APPLICATION'', ''PROTEST'', ''MOTION TO INTERVENE'', as applicable, and the Project Number of the particular application to which the filing refers. Any of the above-named documents must be filed by providing the original and the number of copies provided by the Commission's regulations to: The Secretary, Federal Energy Regulatory Commission, 888 First Street, N.E., Washington, D.C. 20426. An additional copy must be sent to Director, Division of Project Review, Federal Energy Regulatory Commission, at the above-mentioned address. A copy of any notice of intent, competing application or motion to intervene must also be served upon each representative of the Applicant specified in the particular application.

D2. Agency Comments—Federal, state, and local agencies are invited to file comments on the described application. A copy of the application may be obtained by agencies directly from the Applicant. If an agency does not file comments within the time specified for filing comments, it will be presumed to have no comments. One copy of an agency's comments must also be sent to the Applicant's representatives.

D8. Filing and Service of Responsive Documents—The application is not ready for environmental analysis at this time; therefore, the Commission is not now requesting comments, recommendations, terms and conditions, or prescriptions.

When the application is ready for environmental analysis, the Commission will issue a public notice requesting comments, recommendations, terms and conditions, or prescriptions.

All filings must (1) bear in all capital letters the title ''PROTEST'' or ''MOTION TO INTERVENE,'' ''NOTICE

OF INTENT TO FILE COMPETING APPLICATION,'' or ''COMPETING APPLICATION;'' (2) set forth in the heading the name of the applicant and the project number of the application to which the filing responds; (3) furnish the name, address, and telephone number of the person protesting or intervening; and (4) otherwise comply with the requirements of 18 CFR 385.2001 through 385.2005. Agencies may obtain copies of the application directly from the applicant. Any of these documents must be filed by providing the original and the number of copies required by the Commission's regulations to: The Secretary, Federal Energy Regulatory Commission, 888 First Street, N.E., Washington, D.C. 20426. An additional copy must be sent to Director, Division of Project Review, Office of Hydropower Licensing, Federal Energy Regulatory Commission, at the above address. A copy of any protest or motion to intervene must be served upon each representative of the applicant specified in the particular application.

E1. Filing and Service of Responsive Documents—The application is not ready for environmental analysis at this time; therefore, the Commission is not now requesting comments, recommendations, terms and conditions, or prescriptions.

When the application is ready for environmental analysis, the Commission will issue a public notice requesting comments, recommendations, terms and conditions, or prescriptions.

All filings must (1) bear in all capital letters the title ''PROTEST'' or ''MOTION TO INTERVENE;'' (2) set forth in the heading the name of the applicant and the project number of the application to which the filing responds; (3) furnish the name, address, and telephone number of the person protesting or intervening; and (4) otherwise comply with the requirements of 18 CFR 385.2001 through 385.2005. Agencies may obtain copies of the application directly from the applicant. Any of these documents must be filed by providing the original and the number of copies required by the Commission's regulations to: The Secretary, Federal Energy Regulatory Commission, 888 First Street, N.E., Washington, D.C. 20426. An additional copy must be sent to Director, Division of Project Review, Office of Hydropower Licensing, Federal Energy Regulatory Commission, at the above address. A copy of any protest or motion to intervene must be served upon each representative of the applicant specified in the particular application.

Dated: April 17, 1996.

Lois D. Cashell,

Secretary.

[FR Doc. 96–10204 Filed 4–24–96; 8:45 am]

BILLING CODE 6717–01–P

EQUAL EMPLOYMENT OPPORTUNITY COMMISSION

Sunshine Act Meeting

AGENCY HOLDING THE MEETING: Equal Employment Opportunity Commission.

DATE AND TIME: Tuesday, April 30, 1996; 2:00 pm.

PLACE: Conference Room on the Ninth Floor of the EEOC Office Building, 1801 ''L'' Street, N.W., Washington, D.C.

STATUS: The Meeting will be open to the public.

MATTERS TO BE CONSIDERED:

1. Announcement of Notation Votes.
2. Allocation of Remaining FY 1996 State & Local Program Funds.

Note: Any matter not discussed or concluded may be carried over to a later meeting. (In addition to publishing notices on EEOC Commission meetings in the Federal Register, the Commission also provides a recorded announcement a full week in advance on future Commission sessions.) Please telephone (202) 663–7100 (voice) and (202) 663–4074 (TTD) at any time for information on these meetings.

CONTACT PERSON FOR MORE INFORMATION: Frances M. Hart, Executive officer on (202) 663–4070.

Dated: April 23, 1996.

Frances M. Hart,

Executive Officer, Executive Secretariat.

[FR Doc. 96–10407 Filed 4–23–96; 2:18 pm]

BILLING CODE 6750–06–M

FEDERAL COMMUNICATIONS COMMISSION

Licensee Order to Show Cause

The Assistant Chief, Audio Services Division, Mass Media Bureau, has before him the following matter:

Licensee	City/state	MM docket No.
KGCX, Inc., Licensee of KGCX(AM).	Sidney, Montana.	96–97
Sidney Broadcasters, Inc., Licensee of KGCH–FM.	Sidney, Montana.	.....

(Regarding the silent status of Stations KGCX(AM) and KGCH–FM).

Pursuant to Section 312(a) (3) and (4) of the Communications Act of 1934, as amended, KGCX, Inc. and Sidney Broadcasters, Inc. have been directed to show cause why the licenses for Stations KGCX(AM) and KGCH–FM should not be revoked, at a proceeding in which the above matter has been designated for hearing concerning the following issues:

1. To determine whether KGCX, Inc. and Sidney Broadcasters, Inc. have the capability and intent to expeditiously resume the broadcast operations of KGCX(AM) and KGCH–FM consistent with the Commission's Rules.

2. To determine whether KGCX, Inc. and Sidney Broadcasters have violated Sections 73.1740 and/or 73.1750 of the Commissions Rules.

3. To determine, in light of the evidence adduced pursuant to the foregoing issues, whether KGCX, Inc. and Sidney Broadcasters, Inc. are qualified to be and remain the licensees of Stations KGCX(AM) and KGCH–FM.

A copy of the complete Show Cause Order and Hearing Designation Order in this proceeding is available for inspection and copying during normal business hours in the FCC Dockets Branch (Room 320), 1919 M Street, NW., Washington, DC. The complete text may also be purchased from the Commission's duplicating contractor, International Transcription Service, 2100 M Street, NW., Suite 140, Washington, DC 20037 (telephone 202–857–3800).

Federal Communications Commission.

Stuart B. Bedell,

Assistant Chief, Audio Services Division, Mass Media Bureau.

[FR Doc. 96–10171 Filed 4–24–96; 8:45 am]

BILLING CODE 6712–01–P

FEDERAL EMERGENCY MANAGEMENT AGENCY

[FEMA–1109–DR]

Indiana; Amendment to Notice of a Major Disaster Declaration

AGENCY: Federal Emergency Management Agency (FEMA).

ACTION: Notice.

SUMMARY: This notice amends the notice of a major disaster for the State of Indiana, (FEMA–1109–DR), dated April 2, 1996, and related determinations.

EFFECTIVE DATE: April 18, 1996.

FOR FURTHER INFORMATION CONTACT: Pauline C. Campbell, Response and Recovery Directorate, Federal Emergency Management Agency, Washington, DC 20472, (202) 646–3606.

SUPPLEMENTARY INFORMATION: The notice of a major disaster for the State of

Indiana, is hereby amended to include the following areas among those areas determined to have been adversely affected by the catastrophe declared a major disaster by the President in his declaration of April 2, 1996:

The counties of Brown, Hancock, and Putnam for reimbursement for the costs of equipment, contracts, and personnel overtime that are required to clear one lane in each direction along snow emergency routes (or select primary roads in those communities without such designated roadways), and routes necessary to allow the passage of emergency vehicles to hospitals, nursing homes, and other critical facilities.

(Catalog of Federal Domestic Assistance No. 83.516, Disaster Assistance.)

Dennis H. Kwiatkowski,

Deputy Associate Director, Response and Recovery Directorate.

[FR Doc. 96–10235 Filed 4–24–96; 8:45 am]

BILLING CODE 6718–02–P

[FEMA–1095–DR]

New York; Amendment to Notice of a Major Disaster Declaration

AGENCY: Federal Emergency Management Agency (FEMA).

ACTION: Notice.

SUMMARY: This notice amends the notice of a major disaster for the State of New York, (FEMA–1095–DR), dated January 24, 1996, and related determinations.

EFFECTIVE DATE: April 16, 1996.

FOR FURTHER INFORMATION CONTACT: Pauline C. Campbell, Response and Recovery Directorate, Federal Emergency Management Agency, Washington, DC 20472, (202) 646–3606.

SUPPLEMENTARY INFORMATION: The notice of a major disaster for the State of New York, is hereby amended to include the following areas among those areas determined to have been adversely affected by the catastrophe declared a major disaster by the President in his declaration of January 24, 1996:

Onondaga and St. Lawrence Counties for Public Assistance.

(Catalog of Federal Domestic Assistance No. 83.516, Disaster Assistance.)

G. Clay Hollister,

Deputy Associate Director, Response and Recovery Directorate.

[FR Doc. 96–10236 Filed 4–24–96; 8:45 am]

BILLING CODE 6718–02–P

[FEMA–3117–EM]

Texas; Amendment to Notice of an Emergency Declaration

AGENCY: Federal Emergency Management Agency (FEMA).

ACTION: Notice.

SUMMARY: This notice amends the notice of an emergency for the State of Texas, (FEMA–3117–EM), dated February 23, 1996, and related determinations.

EFFECTIVE DATE: April 15, 1996.

FOR FURTHER INFORMATION CONTACT: Pauline C. Campbell, Response and Recovery Directorate, Federal Emergency Management Agency, Washington, DC 20472, (202) 646–3606.

SUPPLEMENTARY INFORMATION: The notice of an emergency for the State of Texas, is hereby amended to include the following area among those areas determined to have been adversely affected by the catastrophe declared an emergency by the President in his declaration of February 23, 1996:

Anderson, Bowie, Harrison, Sabine, Smith, Walker and Waller Counties for emergency assistance as defined in the amended declaration letter of February 29, 1996.

(Catalog of Federal Domestic Assistance No. 83.516, Disaster Assistance.)

Dennis Kwiatkowski,

Deputy Associate Director, Response and Recovery Directorate.

[FR Doc. 96–10234 Filed 4–24–96; 8:45 am]

BILLING CODE 6718–02–P

Open Meeting, Technical Mapping Advisory Council

AGENCY: Federal Emergency Management Agency (FEMA).

ACTION: Notice of meeting.

SUMMARY: In accordance with section 10(a)(2) of the Federal Advisory Committee Act, 5 U.S.C. App.1, the Federal Emergency Management Agency gives notice of the following meeting:

NAME: Technical Mapping Advisory Council.

DATES OF MEETING: May 2–3, 1996.

PLACE: Hall of States, 444 North Capitol Street, Washington, D.C. 20001.

TIME: May 2, 1996 from 8:30 a.m. to 5:00 p.m. May 3, 1996 from 8:30 a.m. to Noon.

PROPOSED AGENDA: Selection of the Council chair; general orientation on the background, authority and duties of the Council. presentations on the impacts of Flood Insurance Rate Maps; discussion of the objectives, priorities, timing, and procedures for accomplishing the Council's work.

STATUS: Open to the public.

FOR FURTHER INFORMATION CONTACT: Michael K. Buckley, P.E., Federal Emergency Management Agency, 500 C Street SW., room 421, Washington, DC, 20472; telephone (202) 646–2756.

SUPPLEMENTARY INFORMATION: As the first official meeting of the Technical Mapping Advisory Council, the organization of and goals for the group will be established. Also, the next meeting date and location will be established.

Dated: April 2, 1996.

Richard W. Krimm,

Acting Associate Director, Mitigation Directorate.

[FR Doc. 96–10233 Filed 4–24–96; 8:45 am]

BILLING CODE 6718–04–P

FEDERAL MARITIME COMMISSION

Notice of Agreement(s) Filed

The Federal Maritime Commission hereby gives notice that the following agreement(s) has been filed with the Commission pursuant to section 15 of the Shipping Act, 1916, and section 5 of the Shipping Act of 1984.

Interested parties may inspect and obtain a copy of each agreement at the Washington, DC. Office of the Federal Maritime Commission, 800 North Capitol Street, NW., 9th Floor. Interested parties may submit protests or comments on each agreement to the Secretary, Federal Maritime Commission, Washington, DC 20573, within 10 days after the date of the Federal Register in which this notice appears. The requirements for comments and protests are found in section 560.602 and/or 572.603 of Title 46 of the Code of Federal Regulations. Interested persons should consult this section before communicating with the Commission regarding a pending agreement.

Any person filing a comment or protest with the Commission shall, at the same time, delivery a copy of that document to the person filing the agreement at the address shown below.

Agreement No.: 224–200983

Title: Port of San Diego/Tenth Avenue Cold Storage Company Operating Contract.

Parties: Port of San Diego (''Port''), Tenth Avenue Cold Storage Company (''TACSC'').

Filing Agent: Mr. Stanley R. Westover, Manager, Marine Operations, Port of San Diego and Lindbergh Field Air Terminal, P.O. Box 488, San Diego, CA 92112–0488.

Synopsis: The proposed Agreement authorizes TACSC to maintain and operate the Cool/Cold Storage Facility at the Port's Tenth Avenue Marine Terminal.

Agreement No.: 224–200984

Title: Port of San Diego/South Pacific Container Line, Inc. Non-exclusive Terminal Use Agreement.

Parties: Port of San Diego (''Port''), South Pacific Container Line, Inc. (''SPCL'').

Filing Agent: Mr. Stanley R. Westover, Manager, Marine Operations, Port of San Diego and Lindbergh Field Air Terminal, P.O. Box 488, San Diego, CA 92112–0488.

Synopsis: The proposed Agreement authorizes SPCL to have non-exclusive use of certain facilities at the Port's Tenth Avenue Marine Terminal. In consideration for these rights and privileges SPCL will schedule the Southern California port of call for its vessel operations as specified in the Agreement terms until December 31, 2000.

By order of the Federal Maritime Commission.

Dated: April 19, 1996.

Joseph C. Polking,

Secretary.

[FR Doc. 96–10120 Filed 4–24–96; 8:45 am]

BILLING CODE 6730–01–M

Notice of Agreement(s) Filed

The Federal Maritime Commission hereby gives notice of the filing of the following agreement(s) pursuant to section 5 of the Shipping Act of 1984.

Interested parties may inspect and obtain a copy of each agreement at the Washington, D.C. Office of the Federal Maritime Commission, 800 North Capitol Street, NW., 9th Floor. Interested parties may submit comments on each agreement to the Secertary, Federal Maritime Commission, Washington, DC 20573, within 10 days after the date of the Federal Register in which this notice appears. The requirements for comments are found in section 572.603 of Title 46 of the Code of Federal Regulations. Interested persons should consult this section before communicating with the Commission regarding a pending agreement.

Agreement No.: 202–010776–098

Title: Asia North America Eastbound Rate Agreement.

Parties: American President Lines, Ltd., Hapag-Lloyd Aktiengesellchaft, Kawasaki Kisen Kaisha, Ltd., A.P. Moller-Maersk Line, Mitsui O.S.K. Lines, Ltd., Nedlloyd Lijnen B.V., Neptune Orient Lines. Ltd., Nippon Yusen Kaisha Line, Orient Overseas Container Line, Inc., Sea-Land Service, Inc.

Synopsis: The proposed amendment amends Article 14.2 of the Agreement to clarify the procedures and conditions under which members having individual service contract commitments may fulfill such service contracts.

Agreement No.: 224–200563–005

Title: Port of Oakland/Trans Pacific Container Service Corporation Terminal Agreement.

Parties: Port of Oakland (''Port''), Trans Pacific Container Service Corporation (''TPCSC'').

Synopsis: The proposed amendment authorizes TPCSC to enter into a global alliance agreement with other shipping lines. In addition, the Port will provide the facilities for the combined operations of TPCSC and the global alliance.

Agreement No.: 224–200979

Title: Jacksonville Port Authority/Sea-Land Service, Inc. Truck Scale Weight Rate Agreement.

Parties: Jacksonville Port Authority (''Port''), Sea-Land Service, Inc. (''Sea-Land'').

Synopsis: The proposed Agreement specifies that Sea-Land will pay the Port $3.50 per weigh for all weigh arriving at or departing from the Blount Island Marine Terminal.

Agreement No.: 224–200980

Title: Jacksonville Port Authority/NPR, Inc. Truck Scale Weight Rate Agreement.

Parties: Jacksonville Port Authority (''Port''), NPR, Inc. (''NPR'').

Synopsis: The proposed Agreement specifies that NPR will pay the Port $3.50 per weigh for all weights arriving at or departing from the Blount Island Marine Terminal.

By order of the Federal Maritime Commission.

Dated: April 19, 1996.

Joseph C. Polking,

Secretary.

[FR Doc. 96–10119 Filed 4–24–96; 8:45 am]

BILLING CODE 6730–01–M

FEDERAL RESERVE SYSTEM

Formations of, Acquisitions by, and Mergers of Bank Holding Companies

The companies listed in this notice have applied to the Board for approval, pursuant to the Bank Holding Company Act of 1956 (12 U.S.C. 1841 *et seq.*) (BHC Act), Regulation Y (12 CFR part 225), and all other applicable statutes and regulations to become a bank holding company and/or to acquire the assets or the ownership of, control of, or the power to vote shares of a bank or bank holding company and all of the banks and nonbanking companies owned by the bank holding company, including the companies listed below.

The applications listed below, as well as other related filings required by the Board, are available for immediate inspection at the Federal Reserve Bank indicated. Once the application has been accepted for processing, it will also be available for inspection at the offices of the Board of Governors. Interested persons may express their views in writing on the standards enumerated in the BHC Act (12 U.S.C. 1842(c)). If the proposal also involves the acquisition of a nonbanking company, the review also includes whether the acquisition of the nonbanking company complies with the standards in section 4 of the BHC Act, including whether the acquisition of the nonbanking company can ''reasonably be expected to produce benefits to the public, such as greater convenience, increased competition, or gains in efficiency, that outweigh possible adverse effects, such as undue concentration of resources, decreased or unfair competition, conflicts of interests, or unsound banking practices'' (12 U.S.C. 1843). Any request for a hearing must be accompanied by a statement of the reasons a written presentation would not suffice in lieu of a hearing, identifying specifically any questions of fact that are in dispute, summarizing the evidence that would be presented at a hearing, and indicating how the party commenting would be aggrieved by approval of the proposal. Unless otherwise noted, nonbanking activities will be conducted throughout the United States.

Unless otherwise noted, comments regarding each of these applications must be received at the Reserve Bank indicated or the offices of the Board of Governors not later than May 17, 1996.

A. Federal Reserve Bank of Chicago (James A. Bluemle, Vice President) 230 South LaSalle Street, Chicago, Illinois 60690:

1. Central Wisconsin Bancorporation, Inc., Colby, Wisconsin; to become a bank holding company by acquiring 96.75 percent of the voting shares of Owen-Curtiss State Bank, Owen, Wisconsin.

2. Van Diest Investment Company, Ankeny, Iowa; to acquire 100 percent of the voting shares of East Des Moines National Bank, Des Moines, Iowa.

Board of Governors of the Federal Reserve System, April 19, 1996.

Jennifer J. Johnson,

Deputy Secretary of the Board.

[FR Doc. 96-10147 Filed 4-24-96; 8:45 am]

BILLING CODE 6210-01-F

Notice of Proposals to Engage in Permissible Nonbanking Activities or to Acquire Companies That are Engaged in Permissible Nonbanking Activities

The companies listed in this notice have given notice under section 4 of the Bank Holding Company Act (12 U.S.C. 1843) (BHC Act) and Regulation Y, (12 CFR part 225) to engage *de novo*, or to acquire or control voting securities or assets of a company that engages either directly or through a subsidiary or other company, in a nonbanking activity that is listed in § 225.25 of Regulation Y (12 CFR 225.25) or that the Board has determined by Order to be closely related to banking and permissible for bank holding companies. Unless otherwise noted, these activities will be conducted throughout the United States.

Each notice is available for inspection at the Federal Reserve Bank indicated. Once the notice has been accepted for processing, it will also be available for inspection at the offices of the Board of Governors. Interested persons may express their views in writing on the question whether the proposal complies with the standards of section 4 of the BHC Act, including whether consummation of the proposal can ''reasonably be expected to produce benefits to the public, such as greater convenience, increased competition, or gains in efficiency, that outweigh possible adverse effects, such as undue concentration of resources, decreased or unfair competition, conflicts of interests, or unsound banking practices'' (12 U.S.C. 1843). Any request for a hearing on this question must be accompanied by a statement of the reasons a written presentation would not suffice in lieu of a hearing, identifying specifically any questions of fact that are in dispute, summarizing the evidence that would be presented at a hearing, and indicating how the party commenting would be aggrieved by approval of the proposal.

Unless otherwise noted, comments regarding the applications must be received at the Reserve Bank indicated or the offices of the Board of Governors not later than May 8, 1996.

A. Federal Reserve Bank of New York (Christopher J. McCurdy, Senior Vice President) 33 Liberty Street, New York, New York 10045:

1. Waterhouse Investor Services, Inc., New York, New York; to engage *de novo* through its subsidiary, Waterhouse Securities Inc., New York, New York, and thereby engage in the purchase and sale of securities on the order of customers as a ''riskless principal'', pursuant to Bankers Trust New York Corp., 75 Fed. Res. Bull. 829 (1989).

B. Federal Reserve Bank of Richmond (Lloyd W. Bostian, Jr., Senior Vice President) 701 East Byrd Street, Richmond, Virginia 23261:

1. Allied Irish Banks, p.l.c., Dublin, Ireland; and First Maryland Bancorp, Baltimore, Maryland; to acquire Washington Federal Savings Bank, Herndon, Virginia, and thereby indirectly acquire 1st Washington Bancorp, Inc., Herndon, Virginia, and thereby engage in operating a savings bank, pursuant to § 225.25(b)(9) of the Board's Regulation Y, in mortgage origination and servicing, pursuant to § 225.25(b)(1) of the Board's Regulation Y; and in the sale of property and casualty insurance and group life and health insurance, pursuant to § 225.25(b)(8) of the Board's Regulation Y.

2. American Bankshares, Inc., Welch, West Virginia; to engage *de novo* through its subsidiary, Ameriloan, Englewood, Colorado, in consumer financing, pursuant to § 225.25(b)(1)(i) of the Board's Regulation Y.

Board of Governors of the Federal Reserve System, April 19, 1996.

Jennifer J. Johnson,

Deputy Secretary of the Board.

[FR Doc. 96-10148 Filed 4-24-96; 8:45 am]

BILLING CODE 6210-01-F

DEPARTMENT OF HEALTH AND HUMAN SERVICES

National Institutes of Health

National Heart, Lung, and Blood Institute; Notice of Meeting of the Sickle Cell Disease Advisory Committee

Pursuant to Public Law 92–463, notice is hereby given of the meeting of the Sickle Cell Disease Advisory Committee, National Heart, Lung, and Blood Institute, June 7, 1996. The meeting will be held at the National Institutes of Health, Two Rockledge Center, Conference Room 9A1–A2, 6701 Rockledge Drive, Bethesda, Maryland 20892.

The entire meeting will be open to the public from 9:00 a.m. to adjournment, to discuss recommendations on the implementation and evaluation of the Sickle Cell Disease Program. Attendance by the public will be limited to space available.

Individuals who plan to attend and need special assistance, such as sign language interpretation or other reasonable accommodations, should contact the Executive Secretary in advance of the meeting.

Dr. Clarice D. Reid, Executive Secretary, Sickle Cell Disease Advisory Committee, Division of Blood Diseases and Resources, NHLBI, Two Rockledge Center, Suite 10160, 6701 Rockledge Drive, Bethesda, Maryland 20892, (301) 435–0080, will furnish substantive program information, a summary of the meeting, and a roster of the committee members.

(Catalog of Federal Domestic Assistance Program No. 93.839, Blood Diseases and Resources Research, National Institutes of Health)

Dated: April 22, 1996.

Susan K. Feldman,

Committee Management Officer, NIH.

[FR Doc. 96–10197 Filed 4–24–96; 8:45 am]

BILLING CODE 4140–01–M

Notice of Meeting of the National Advisory Council for Human Genome Research

Pursuant to Public Law 92–463, notice is hereby given of the meeting of the National Advisory Council for Human Genome Research, National Center for Human Genome Research, May 20–21, 1996, Holiday Inn, Washington/Chevy Chase, Palladian East/Center, 5520 Wisconsin Avenue, Chevy Chase, Maryland.

This meeting will be open to the public on Monday, May 20, from 8:30 a.m. to 11:30 a.m. to discuss administrative details or other issues relating to committee activities. Attendance by the public will be limited to space available.

In accordance with the provisions set forth in sections 552b(c)(4) and 552b(c)(6), Title 5, U.S.C. and section 10(d) of Public Law 92–463, the meeting will be closed to the public on May 20 at 11:30 a.m. to recess and on May 21 from 8:30 a.m. to adjournment, for the review, discussion and evaluation of individual grant applications. The applications and the discussions could reveal confidential trade secrets or commercial property such as patentable material, and personal information concerning individuals associated with applications, the disclosure of which would constitute a clearly unwarranted invasion of personal privacy.

Dr. Elke Jordan, Deputy Director, National Center for Human Genome Research, National Institutes of Health,

Building 31, Room 4B09, Bethesda, Maryland 20892, (301) 496–0844, will furnish the meeting agenda, rosters of Committee members and consultants, and substantive program information upon request. Individuals who plan to attend and need special assistance, such as sign language interpretation or other reasonable accommodations, should contact Ms. Jane Ades, (301) 594–1929, two weeks in advance of the meeting.

(Catalogue of Federal Domestic Assistance Program No. 93.172, Human Genome Research)

Dated: April 22, 1996.

Susan K. Feldman,

Committee Management Officer, NIH.

[FR Doc. 96–10196 Filed 4–24–96; 8:45 am]

BILLING CODE 4140–01–M

National Institute of Environmental Health Sciences; Notice of Meeting of National Advisory Environmental Health Sciences Council

Pursuant to Public Law 92–463, notice is hereby given of the meeting of the National Advisory Environmental Health Sciences Council, May 20–21, 1996, Building 101 Conference Room, South Campus, Research Triangle Park, North Carolina.

This meeting will be open to the public on May 20 from 8:30 a.m. to approximately 3:30 p.m. for the report of the Director, NIEHS, and for discussion of the NIEHS budget, program policies and issues, recent legislation, and other items of interest. Attendance by the public will be limited to space available.

In accordance with the provisions set forth in sections 552b(c)(4) and 552b(c)(6), Title 5, U.S.C. and section 10(d) of Public Law 92–463, the meeting will be closed to the public on May 20 from approximately 3:30 p.m. to recess and from 9 a.m. to adjournment on May 21, for the review, discussion and evaluation of individual grant applications. These applications and the discussions could reveal confidential trade secrets or commercial property such as patentable material, and personal information concerning individuals associated with the applicants, the disclosure of which would constitute a clearly unwarranted invasion of personal privacy.

Individuals who plan to attend and need special assistance, such as sign language interpretation or other reasonable accommodations, should contact the Executive Secretary in advance of the meeting.

Dr. Anne Sassaman, Director, Division of Extramural Research and Training, & Executive Secretary, National Advisory Environmental Health Sciences Council, NIEHS, P.O. Box 12233, Research Triangle Park, North Carolina 27709, (919) 541–7723, will furnish substantive program information.

(Catalog of Federal Domestic Assistance Program Nos. 93.113, Biological Response to Environmental Agents; 93.114, Applied Toxicological Research and Testing; 93.115, Biometry and Risk Estimation; 93.894, Resource and Manpower Development, National Institute of Health)

Dated: April 22, 1996.

Susan K. Feldman,

Committee Management Officer, NIH.

[FR Doc. 96–10195 Filed 4–24–96; 8:45 am]

BILLING CODE 4140–01–M

National Institute of Neurological Disorders and Stroke; Notice of Meetings

Pursuant to Public Law 92–463, notice is hereby given of meetings of the National Institute of Neurological Disorders and Stroke (NINDS).

The National Advisory Neurological Disorders and Stroke Council and its subcommittee meetings will be open to the public as indicated below. Attendance by the public will be limited to space available.

The meetings will be closed to the public as indicated below in accordance with the provisions set forth in sections 552b(c)(4) and 552b(c)(6), Title 5, U.S.C. and section 10(d) of Public Law 92–463, for the review, discussion and evaluation of individual grant applications. These applications could reveal confidential trade secrets or commercial property such as patentable material, and personal information concerning individuals associated with the applications, the disclosure of which would constitute a clearly unwarranted invasion of personal privacy.

Summaries of meetings, rosters of committee members, and other information pertaining to the meetings can be obtained from the Executive Secretary or the Scientific Review Administration indicated. Individuals who plan to attend and need special assistance, such as sign language interpretation or other reasonable accommodations, should contact the Executive Secretary listed for the meeting.

Name of Committee: The Planning Subcommittee of the National Advisory Neurological Disorders and Stroke Council.

Date: June 12, 1996.

Place: National Institutes of Health, Building 31, Conference Room 8A28, 9000 Rockville Pike, Bethesda, MD 20892.

Closed: 1:30 p.m.–recess.

Name of Committee: National Advisory Neurological Disorders and Stroke Council.

Dates: June 13–14, 1996.

Place: National Institutes of Health, Building 1, Wilson Hall, 9000 Rockville Pike, Bethesda, MD 20892.

Open: June 13, 9 a.m.–approximately 3 p.m.

Agenda: A report by the Director, NINDS; a report by the Director, Division of Extramural Activities, NINDS; and a scientific presentation by an NINDS grantee.

Closed: June 13, approximately 3 p.m.–recess. June 14, 8:30 a.m.–adjournment.

Executive Secretary: Constance W. Atwell, Ph.D, Director, Division of Extramural Activities, NINDS, National Institutes of Health, Bethesda, MD 20892, Telephone: (301) 496–9248.

The following meetings will be totally closed to review and evaluate grant applications:

Name of Committee: Training Grant and Career Development Review Committee.

Date: June 13, 1996.

Time: 8 a.m.—adjournment.

Place: The Hampshire Hotel, 13310 New Hampshire Ave., N.W., Washington, DC 20036.

Contact Person: Dr. Alfred W. Gordon, Scientific Review Administrator, National Institutes of Health, Federal Building, Room 9C–10, Bethesda, MD 20892, (301) 496–9223.

Name of Committee: National Institute of Neurological Disorders and Stroke Initial Review Group, Subcommittee B.

Date: June 17–19, 1996.

Time: June 17, 7:30 p.m.—recess. June 18, 8 a.m.—recess. June 19, 8 a.m.—adjournment.

Place: Radisson Barcelo Hotel, 2121 P Street, N.W., Washington, DC 20037.

Contact Person: Dr. Paul Sheehy, Scientific Review Administrator, National Institutes of Health, Federal Building, Room 9C–10, Bethesda, MD 20892, (301) 496–9223.

Name of Committee: National Institute of Neurological Disorders and Stroke Initial Review Group, Subcommittee A.

Date: June 23–25, 1996.

Time: June 23, 7:30 p.m.—recess. June 24, 8:30 a.m.—recess. June 25, 8:30 a.m.—adjournment.

Place: University Inn, 4140 Roosevelt Way, N.E., Seattle, WA 98105.

Contact Person: Dr. Kathrine Woodbury, Scientific Review Administrator, National Institute of Health, Federal Building, Room 9C–10, Bethesda, MD 20892, (301) 496–9223.

(Catalog of Federal Domestic Assistance Program No. 93.853, Clinical Research Related to Neurological Disorders; No. 93.854, Biological Basis Research in the Neurosciences)

Dated April 22, 1996.

Susan K. Feldman,

Committee Management Officer, NIH.

[FR Doc. 96–10194 Filed 4–24–96; 8:45 am]

BILLING CODE 4140–01–M

National Institute of Mental Health; Notice of Closed Meetings

Pursuant to Section 10(d) of the Federal Advisory Committee Act, as amended (5 U.S.C. Appendix 2), notice is hereby given of the following meetings of the National Institute of Mental Health Special Emphasis Panel:

AGENDA/PURPOSE: To review and evaluate grant applications.

Committee Name: National Institute of Mental Health Special Emphasis Panel.
Date: May 6, 1996.
Time: 10 a.m.
Place: Days Inn, 2000 Jefferson Davis Hwy., Crystal City, VA 22202.
Contact Person: Angela L. Redlingshafer, Parklawn, Room 9C–18, 5600 Fishers Lane, Rockville, MD 20857, Telephone: 301, 443–1367.

Committee Name: National Institute of Mental Health Special Emphasis Panel.
Date: May 8, 1996.
Time: 1 p.m.
Place: Parklawn Building, Room 9C–18, 5600 Fishers Lane, Rockville, MD 20857.
Contact Person: W. Gregory Zimmerman, Parklawn Building, Room 9C–18, 5600 Fishers Lane, Rockville, MD 20857, Telephone: 301, 443–1340.

Committee Name: National Institute of Mental Health Special Emphasis Panel.
Date: May 8, 1996.
Time: 3 p.m.
Place: Parklawn Building, Room 9C–18, 5600 Fishers Lane, Rockville, MD 20857.
Contact Person: W. Gregory Zimmerman, Parklawn Building, Room 9C–18, 5600 Fishers Lane, Rockville, MD 20857, Telephone: 301, 443–1340.

Committee Name: National Institute of Mental Health Special Emphasis Panel.
Date: May 10, 1996.
Time: 9 a.m.
Place: Double Tree Hotel, 1750 Rockville Pike, Rockville, MD 20852.
Contact Person: W. Gregory Zimmerman, Parklawn Building, Room 9C–18, 5600 Fishers Lane, Rockville, MD 20857, Telephone: 301, 443–1340.

The meetings will be closed in accordance with the provisions set forth in sections 552b(c)(4) and 552b(c)(6), Title 5, U.S.C. Applications and/or proposals and the discussions could reveal confidential trade secrets or commercial property such as patentable material and personal information concerning individuals associated with the applications and/or proposals, the disclosure of which would constitute a clearly unwarranted invasion of personal privacy.

This notice is being published less than fifteen days prior to the meetings due to the urgent need to meet timing limitations imposed by the review and funding cycle.

(Catalog of Federal Domestic Assistance Program Numbers 93.242, 93.281, 93.282)

Dated: April 22, 1996.

Susan K. Feldman,

Committee Management Officer, NIH.

[FR Doc. 96–10193 Filed 4–24–96; 8:45 am]

BILLING CODE 4140–01–M

National Heart, Lung, and Blood Institute; Notice of Meeting of the National Heart, Lung, and Blood Advisory Council

Pursuant to Public Law 92–463, notice is hereby given of the meeting of the National Heart, Lung, and Blood Advisory Council, National Heart, Lung, and Blood Institute, May 30–31, 1996, National Institutes of Health, 9000 Rockville Pike, Building 31, Conference Room 10, Bethesda, Maryland 20892.

The Council meeting will be open to the public on May 30 from 8:30 a.m. to approximately 3:30 p.m. for discussion of program policies and issues. Attendance by the public is limited to space available.

In accordance with the provisions set forth in sections 552b(c)(4) and 552b(c)(6), Title 5, U.S.C., section 10(d) of Public Law 92–463, the Council meeting will be closed to the public from approximately 3:30 p.m. to recess on May 30 and from 8:30 a.m. to adjournment on May 31 for the review, discussion and evaluation of individual grant applications. These applications and the discussions could reveal confidential trade secrets or commercial property such as patentable material, and personal information concerning individuals associated with the applications, the disclosure of which would constitute a clearly unwarranted invasion of personal privacy.

Individuals who plan to attend and need special assistance, such as sign language interpretation or other reasonable accommodations, should contact the Executive Secretary in advance of the meeting.

Dr. Ronald G. Geller, Executive Secretary, National Heart, Lung, and Blood Advisory Council, Rockledge Building (RKL2), Room 7100, National Institutes of Health, Bethesda, Maryland 20892, (301) 435–0260, will furnish substantive program information.

(Catalog of Federal Domestic Assistance Program Nos. 93.837, Heart and Vascular Diseases Research; 93.838, Lung Diseases Research; and 93.839, Blood Diseases and Resources Research, National Institutes of Health)

Dated: April 19, 1996.

Susan K. Feldman,

Committee Management Officer, NIH.

[FR Doc. 96–10191 Filed 4–24–96; 8:45 am]

BILLING CODE 4140–01–M

National Institute of Environmental Health Sciences; Notice of Meeting of Board of Scientific Counselors, National Institute of Environmental Sciences

Pursuant to Public Law 92–463, notice is hereby given of the meeting of the Board of Scientific Counselors, National Institute of Environmental Health Sciences, June 3–4, 1996, in Building 101, South Campus, Conference Rooms A, B, & C, National Institute of Environmental Health Sciences (NIEHS), Research Triangle Park, North Carolina.

This meeting will be open to the public from 8:30 a.m. to approximately 4:30 p.m. on June 3, for the purpose of presenting an overview of the organization and conduct of research in the Epidemiology Branch and the Office of the Acting Clinical Director. Attendance by the public will be limited to space available.

In accordance with the provisions set forth in section 552b(c)(6) of Title 5, U.S. Code and section 10(d) of Public Law 92–463, the meeting will be closed to the public on June 4 from approximately 8:30 a.m. to adjournment, for the evaluation of the programs of the Epidemiology Branch and the Office of the Acting Clinical Director, including consideration of personnel qualifications and performance, the competence of individual investigators, and similar items, the disclosure of which would constitute a clearly unwarranted invasion of personal privacy.

The Executive Secretary, Dr. Carl Barrett, Scientific Director, Division of Intramural Research, NIEHS, Research Triangle Park, N.C. 27709, telephone (919) 541–3205, will furnish rosters of committee members and program information.

Individuals who plan to attend and need special assistance, such as sign language interpretation or other reasonable accommodations, should contact the Executive Secretary in advance of the meeting.

Dated: April 19, 1996.

Susan K. Feldman,

Committee Management Officer, NIH.

[FR Doc. 96–10192 Filed 4–24–96; 8:45 am]

BILLING CODE 4140–01–M

National Center for Research Resources; Notice of Closed Meeting

Pursuant to Section 10(d) of the Federal Advisory Committee Act, as amended (5 U.S.C. Appendix 2), notice is hereby given of the following

National Center for Research Resources Special Emphasis Panel (SEP) meeting:

Name of SEP: Research Infrastructure in Minority Institutions.

Date: May 27–30, 1996.

Time: 7:00 p.m.

Place: Residence Inn, Montgomery II Room, 7335 Wisconsin Avenue, Bethesda, Maryland 20814, (301) 718–0200.

Contact Person: Dr. John Lymangrover, Scientific Review Administrator, 6705 Rockledge Drive, MSC 7965, Room 6018, Bethesda, MD 20892–7965, (301) 435–0820.

Purpose/Agenda: To evaluate and review grant applications.

This meeting will be closed in accordance with the provisions set forth in sections 552b(c)(4) and 552b(c)(6), Title 5, U.S.C. Applications and/or proposals and the discussions could reveal confidential trade secrets or commercial property such as patentable material and personal information concerning individuals associated with the applications and/or proposals, the disclosure of which would constitute a clearly unwarranted invasion of personal privacy.

(Catalog of Federal Domestic Assistance Program No. 93.389, Research Centers in Minority Institutions, National Institutes of Health, HHS)

Dated: April 19, 1996.

Susan K. Feldman,

Committee Management Officer, NIH.

[FR Doc. 96–10190 Filed 4–24–96; 8:45 am]

BILLING CODE 4140–01–M

National Center for Research Resources; Notice of Meeting of the National Advisory Research Resources Council and its Planning Subcommittee

Pursuant to Pub. L. 92–463, notice is hereby given of the meeting of the National Advisory Research Resources Council (NARRC), National Center for Research Resources (NCRR). This meeting will be open to the public as indicated below. Attendance by the public will be limited to space available.

This meeting will be closed to the public as indicated below in accordance with provisions set forth in secs. 552b(c)(4) and 552b(c)(6), Title 5, U.S.C.. and sec. 10(d) of Pub. L. 92–463, for the review, discussion and evaluation of individual grant applications. The applications and the discussions could reveal confidential trade secrets or commercial property such as patentable material, and personal information concerning individuals associated with the application, the disclosure of which would constitute a clearly unwarranted invasion of personal privacy.

Ms. Maureen Mylander, Public Affairs Officer, NCRR, National Institutes of Health, 1 Rockledge Center, Room 5146, 6705 Rockledge Drive, MSC 7965, Bethesda, Maryland 20892–7965, (301) 435–0888, will provide a summary of the meeting and a roster of the members upon request. Other information pertaining to the meeting can be obtained from the Executive Secretary indicated. Individuals who plan to attend and need special assistance, such as sign language interpretation or other reasonable accommodations, should contact the Executive Secretary in advance of the meeting.

Name of Committee: The Subcommittee on Planning of the National Advisory Research Resources Council.

Place of Meeting: National Institutes of Health, 9000 Rockville Pike, Conference Room 3B41, Building 31B, Bethesda, Maryland 20892.

Open: May 23, 7:30 a.m.–8:45 a.m.

Purpose/Agenda: To discuss policy issues.

Name of Committee: National Advisory Research Resources Council.

Place of Meeting: National Institutes of Health, 9000 Rockville Pike, Conference Room 6, Building 31C, Bethesda, Maryland 20892.

Open: May 23, 9 a.m. until 2:00 p.m.

Purpose/Agenda: Report of Center Director and other issues related to Council business.

Closed: May 23, 2:00 p.m. until recess.

Executive Secretary: Louise Ramm, Ph.D., Deputy Director, National Center for Research Resources, Building 12A, Room 4011, Bethesda, MD 20892, Telephone: (301) 496–6023.

(Catalog of Federal Domestic Assistance Program Nos. 93.306, Laboratory Animal Sciences and Primate Research; 93.333, Clinical Research; 93.337, Biomedical Research Support; 93.371, Biomedical Research Technology; 93.389, Research Centers in Minority Institutions; 93.198, Biological Models and Materials Research; 93.167, Research Facilities Improvement Program; 93.214 Extramural Research Facilities Construction Projects, National Institutes of Health)

Dated: April 19, 1996.

Susan K. Feldman,

Committee Management Officer, NIH.

[FR Doc. 96–10189 Filed 4–24–96; 8:45 am]

BILLING CODE 4140–01–M

National Institute of Environmental Health Sciences; Notice of a Closed Meeting

Pursuant to Section 10(d) of the Federal Advisory Committee Act, as amended (5 U.S.C. Appendix 2), notice is hereby given of the following National Institute of Environmental Health Sciences Special Emphasis Panel (SEP) meeting:

Name of SEP: Environmental Genetics.

Date: May 6–8, 1996.

Time: 8:00 p.m.

Place: Omni Netherland Plaza Hotel, Cincinnati, Ohio.

Contact Person: Dr. Carol Shreffler, National Institute of Environmental Health Sciences, P.O. Box 12233, Research Triangle Park, NC 27709, (919) 541–1445.

Purpose/Agenda: To review and evaluate grant applications.

The meeting will be closed in accordance with the provisions set forth in secs. 552b(c)(4) and 552b(c)(6), Title 5, U.S.C. Applications and the discussions could reveal confidential trade secrets or commercial property such as patentable material and personal information concerning individuals associated with the applications, the disclosure of which would constitute a clearly unwarranted invasion of personal privacy.

This notice is being published less than 15 days prior to this meeting due to the urgent need to meet timing limitations imposed by the grant review and funding cycle.

(Catalog of Federal Domestic Assistance Programs Nos. 93.113, Biological Response to Environmental Agents; 93.114, Applied Toxicological Research and Testing; 93.115, Biometry and Risk Estimation; 93.894, Resource and Manpower Development, National Institutes of Health)

Dated: April 19, 1996.

Susan K. Feldman,

Committee Management Officer, NIH.

[FR Doc. 96–10188 Filed 4–24–96; 8:45 am]

BILLING CODE 4140–01–M

National Cancer Institute; Notice of Meetings of the National Cancer Advisory Board and Its Subcommittees

Pursuant to Section 10(d) of the Federal Advisory Committee Act, as amended (5 U.S.C. Appendix 2), notice is hereby given of the meeting of the National Cancer Advisory Board, National Cancer Institute, and its Subcommittees on May 6–8, 1996. Except as noted below, the meetings of the Board and its Subcommittees will be open to the public to discuss issues relating to committee business as indicated in the notice. Attendance by the public will be limited to space available.

A portion of the Board meeting will be closed to the public in accordance with the provisions set forth in secs. 552b (c)(4) and 552b(c)(6), title 5, U.S.C., for the review, discussion and evaluation of individual grant applications and for discussion of issues pertaining to programmatic areas and/or NCI personnel. There will also be a discussion involving the components of the NCI AIDS program. These applications and discussions could reveal confidential trade secrets or commercial property such as patentable material, and personal information concerning the individuals associated with the applications or programs, the disclosure of which would constitute a

clearly unwarranted invasion of personal privacy.

The Committee Management Office, National Cancer Institute, National Institutes of Health, Executive Plaza North, Room 630E, 9000 Rockville Pike, Bethesda, Maryland 20892 (301/496–5708), will provide summaries of the meetings and rosters of the Board members, upon request.

Individusals who plan to attend and need special assistance, such as sign language interpretation or other reasonable accommodations, should contact Ms. Carole Frank, Committee Management Specialist, at 301/496–5708 in advance of the meeting.

Name of Committee: Subcommittee on Clinical Investigations.

Contact Person: Dr. Robert E. Wittes, Acting Executive Secretary, National Cancer Institute, NIH, Building 31, Room 3A52, 9000 Rockville Pike, Bethesda, MD 20892; (301) 496–4291.

Date of Meeting: May 6, 1996.

Place of Meeting: Hyatt Regency Bethesda, One Bethesda Metro Center, Bethesda, MD 20814.

Open: 8 pm to 9:15 pm.

Agenda: To discuss basic and environmental sciences issues.

Name of Committee: National Cancer Advisory Board.

Contact Person: Dr. Marvin R. Kalt, Executive Secretary, National Cancer Institute, NIH, Executive Plaza North, Room 600A, 6130 Executive Blvd., Bethesda, MD 20892–7405; (301) 496–5147.

Dates of Meeting: May 7–8, 1996.

Place of Meeting: Conference Room 10, Building 31C, National Institutes of Health, 9000 Rockville Pike, Bethesda, MD 20892.

Open: May 7—8 am to approximately 12 pm.

Agenda: Report on activities of the President's Cancer Panel; the Director's Report on the National Cancer Institute; New Business; and Scientific Presentations.

Closed: May 7—3 pm to approximately 5 pm.

Agenda: For review and discussion of individual grant applications and extramural/intramural programmatic and personnel policies.

Open: May 8—8:30 am to 12 pm.

Agenda: Scientific Presentations: Subcommittee Reports; Continuing New Business; Format of Program Review Meeting and Preview of June Retreat; Review of Training and Career Development Mechanisms.

Name of Committee: Subcommittee on Planning and Budget.

Contact Person: Ms. Cherie Nichols, Executive Secretary, National Cancer Institute, NIH, Building 31, Room 11A19, Bethesda, MD 20892; (301) 496–5515.

Date of Meeting: May 7, 1996.

Place of Meeting: Conference Room 9, Building 31C, National Institutes of Health, 9000 Rockville Pike, Bethesda, MD 20892.

Open: 12:30 pm to 2 pm.

Agenda: To discuss the NCI budget and various planning issues.

Name of Committee: Subcommittee on Cancer Centers.

Contact Person: Dr. Brian Kimes, Executive Secretary, National Cancer Institute, NIH, Executive Plaza North, Room 300, 6130 Executive Blvd., Bethesda, MD 20892–7094; (301) 496–8537.

Date of Meeting: May 7, 1996.

Place of Meeting: Conference Room 8, Building 31C, National Institutes of Health, 9000 Rockville Pike, Bethesda, MD 20892.

Open: 2 pm to 3 pm.

Agenda: To discuss the cancer centers.

Name of Committee: Subcommittee for Special Priorities.

Contact Person: Ms. Cherie Nichols, Acting Executive Secretary, National Cancer Institute, NIH, Building 31, Room 11A19, Bethesda, MD 20892; (301) 496–5515.

Date of Meeting: May 7, 1996.

Place of Meeting: Conference Room 9, Building 31C, National Institutes of Health, 9000 Rockville Pike, Bethesda, MD.

Open: 2 pm–3pm.

Agenda: To discuss issues related to special priorities.

This notice is being published less than 15 days prior to the above meetings due to the urgent need to meet timing limitations imposed by the review and funding cycle.

(CATALOG OF FEDERAL DOMESTIC ASSISTANCE PROGRAM NUMBERS: 93.393, Cancer Cause and Prevention Research; 93.394, Cancer Detection and Diagnosis Research; 93.395, Cancer Treatment Research; 93.396, Cancer Biology Research; 93.397, Cancer Centers Support; 93.398, Cancer Research Manpower; 93.399, Cancer Control)

Dated: April 19, 1996.

Susan K. Feldman,

Committee Management Officer, NIH.

[FR Doc. 96–10187 Filed 4–24–96; 8:45 am]

BILLING CODE 4140–01–M

National Institute of Allergy and Infectious Diseases; Notice of Closed Meeting

Pursuant to Section 10(d) of the Federal Advisory Committee Act, as amended (5 U.S.C. Appendix 2), notice is hereby given of the following National Institute of Allergy and Infectious Diseases Special Emphasis Panel (SEP) meeting:

Name of SEP: Master Agreement for HIV Preclinical Vaccine Development proposals, tasks E, F and J.

Date: April 26, 1996.

Time: 8:00 a.m.

Place: Washington National Airport Hilton Hotel, 2399 Jefferson Davis Highway, Arlington, VA 22202, (703) 418–6800.

Contact Person: Dr. Allen Stoolmiller, Scientific Review Adm., 6003 Executive Boulevard, Solar Bldg., Room 4C05, Bethesda, MD 20892–7610, (301) 496–7966.

Purpose/Agenda: To evaluate contract proposals.

The meeting ill be closed in accordance with the provisions set forth in secs. 552b(c)(4) and 552b(c)(6), Title 5, U.S.C. Applications and/or proposals, the disclosure of which would constitute a clearly unwarranted invasion of personal privacy.

This notice is being published less than 15 days prior to the meeting due to the urgent need to meet timing limitations imposed by the review and funding cycle.

(Catalog of Federal Domestic Assistance Programs Nos. 93.855, Immunology, Allergic and Immunologic Diseases Research; 93.856, Microbiology and Infectious Diseases Research, National Institutes of Health.)

Dated: April 22, 1996.

Susan K. Feldman,

Committee Management Officer, NIH.

[FR Doc. 96–10184 Filed 4–24–96; 8:45 am]

BILLING CODE 4140–01–M

DEPARTMENT OF HOUSING AND URBAN DEVELOPMENT

Office of the Secretary

[Docket No. FR–3918–N–07]

Privacy Act of 1974; New System of Records

AGENCY: Department of Housing and Urban Development (HUD).

ACTION: Establish a new system of records.

SUMMARY: The Department of Housing and Urban Development (HUD) proposes to establish a new record system to add to its inventory of systems of records subject to the Private Act of 1974 (5 U.S.C. 552a), as amended.

EFFECTIVE DATE: This action will be effective without further notice on May 28, 1996, unless comments are received that would result in a contrary determination.

ADDRESSES: Interested persons are invited to submit comments regarding this new system of records to the Rules Docket Clerk, Office of General Counsel, room 10276, Department of Housing and Urban Development, 451 Seventh Street, SW, Washington, DC 20410–0500. Communications should refer to the above docket number and title. An original and four copies of comments should be submitted. Facsimile (FAX) comments are not acceptable. A copy of each communication submitted will be available for public inspection and copying between 7:30 a.m. and 5:30 p.m. weekdays at the above address.

FOR FURTHER INFORMATION CONTACT: Jeanette Smith, Departmental Privacy Act Officer, Telephone Number (202) 708–2374. (This is not a toll free number).

SUPPLEMENTARY INFORMATION: Pursuant to the Privacy Act of 1974 (5 U.S.C. 552a), as amended, notice is given that

HUD proposes to establish a new system of records identified as HUD/PD&R–9, entitled HUD USER File for Research Products, Services and Publications.

Title 5 U.S.C. 552a(e)(4) and (11) provide that the public be afforded a 30-day period in which to comment on the new record system.

The new system report, as required by 5 U.S.C. 552a(r) of the Privacy Act was submitted to the Committee on Governmental Affairs of the United States Senate, the Committee on Government Reform and Oversight of the House of Representatives and the Office of Management and Budget (OMB) pursuant to paragraph 4c of Appendix I to OMB Circular No. A–130, Federal Agency Responsibilities for Maintaining Records About Individuals, date June 25, 1993 (58 FR 36075, July 2, 1993).

Authority: 5 U.S.C. 552a; 88 Stat. 1896; sec 7(d), Department of HUD Act (42 U.S.C. 3535 (d)).

Issued at Washington, D.C., April 19, 1996.

Steven M. Yohai,

Director Office of Information Technology.

HUD/PD&R–9

SYSTEM NAME:

HUD USER File for Research Products, Services and Publications.

SYSTEM LOCATION:

HUD USER, PO Box 6091, Rockville, MD 20849

CATEGORIES OF INDIVIDUALS COVERED BY THE SYSTEM:

The system contains information on those individuals who have expressed an interest in received research products and services publications.

CATEGORIES OF RECORDS IN THE SYSTEM:

The system provides a record of individuals who request research products which includes name, title and address; telephone and fax numbers; organizations affiliation and areas of interest; publications of interest; and order information including what was ordered and when, and payment information.

AUTHORITY FOR MAINTENANCE OF THE SYSTEM:

Title V of the Housing and Urban Development Act of 1970, section 501.

ROUTINE USES OF RECORDS MAINTAINED IN THE SYSTEM, INCLUDING CATEGORIES OF USERS AND THE PURPOSES OF SUCH USES:

None.

POLICIES AND PRACTICES FOR STORING, RETRIEVING, ACCESSING, RETAINING AND DISPOSING OF RECORDS IN THE SYSTEM:

STORAGE:

Hard copy files are stored at the HUD User Information Center for a period of three (3) months after which time they are archived at the HUD User Warehouse in Annapolis Junction, Maryland. Electronic files are stored for an indefinite period at the HUD User Information Center as part of the HUD User Order Processing System.

RETRIEVABILITY: Records are retrieved by the name of the individual.

SAFEGUARDS:

These records are available only to those persons whose official duties require such access.

RETENTION AND DISPOSAL:

Written and electronic records are maintained for a period of three years.

SYSTEM MANAGER AND ADDRESS:

Director, Research Utilization Division, 451 Seventh Street, SW., Room 8124, Washington, DC 20410.

NOTIFICATION PROCEDURE:

Individuals seeking to determine whether information about themselves is contained in this system of records should address written inquiries to the particular HUD administrator or component listed in the ''system manager'' location above.

Individuals should furnish full name, current address and telephone number.

RECORD ACCESS PROCEDURES:

The Department's rules for providing access to records to the individual concerned appear in 24 CFR part 16. If additional information or assistance is required, contact the Privacy Act Officer at the appropriate location or the system manager. A list of all locations is given in Appendix A.

CONTESTING RECORD PROCEDURES:

The rules for contesting the contents of records and appealing initial denials, by the individual concerned, appear in 24 CFR part 16. If additional information or assistance is needed in relation to contesting the contents of records, it may be obtained by contacting the Privacy Act Officer at the appropriate location. A list of all locations is given in Appendix A. If additional information or assistance is needed in relation to appeals of initial denials, it may be obtained by contacting the HUD Departmental Privacy Appeals Officer, Office of General Counsel, Department of Housing and Urban Development, 451 Seventh Street, SW., Washington, DC 20410.

RECORD SOURCE CATEGORIES:

Information in this system of records is obtained from requests for information made from HUD User or individuals identified to receive notification of new products or initiatives. The requests for information or printed material may come through the Internet, phone, fax, mail, or a site visit.

EXEMPTIONS FOR CERTAIN PROVISIONS OF THE ACT:

None.

[FR Doc. 96–10287 Filed 4–24–96; 8:45 am]

BILLING CODE 4210–32–M

[Docket No. FR–3660–C–05]

Office of the Assistant Secretary for Public and Indian Housing; Announcement of Funding Awards; Public and Indian Housing Youth Sports Program; Fiscal Year 1994; Correction

AGENCY: Office of the Assistant Secretary for Public and Indian Housing, HUD.

ACTION: Announcement of funding awards; correction.

SUMMARY: On March 13, 1996 (61 FR 10352), HUD published a Notice that announced the recipients of $13,125,000 for the Youth Sports Program (YSP) for Fiscal Year 1994 to be used for sports, cultural, educational, recreational, or other activities designed to appeal to youth as alternatives to the drug environment in public or Indian housing developments. The March 13, 1996 Notice inadvertently listed all eligible applicants. The purpose of this document is to publish the correct listing of applicants that actually received funding.

FOR FURTHER INFORMATION CONTACT: Marvin Klepper, Crime Prevention and Security Division, Office of Community Relations and Involvement, Pubic and Indian Housing, Department of Housing and Urban Development, 451 Seventh Street, S.W., Washington, D.C. 20410, telephone (202) 708–1197, ext. 4229 (this is not a toll-free telephone number). Hearing- or speech-impaired persons may use the Telecommunications Devices for the Deaf (TTY) by contacting the Federal Information Relay Service at 1–800–877–8339.

SUPPLEMENTARY INFORMATION: Accordingly, FR Doc. 96–5920, the Notice of Funding Awards for Fiscal

Year 1994 for Public and Indian Housing Youth Sports Program, published in the Federal Register on March 13, 1996 (61 FR 10352), is corrected on page 10352 of Appendix A as follows:

APPENDIX A—FISCAL YEAR 1994, PUBLIC AND INDIAN HOUSING, RECIPIENTS OF FINAL FUNDING DECISIONS

[Program name: Public and Indian Housing Youth Sports Program (YSP); Statute: Public Law 100–625 Signed November 28, 1990 and Amended in Public Law 102–550 Signed October 28, 1992]

Funding recipient (name and address)	Amount approved
Lynn Housing Authority, 174 South Common Str, Lynn, MA 01905–2513	$125,000
Northampton Housing Authority, 49 Old South Street, Northampton, MA 01060	$118,325
Lawrence Housing Authority, 353 Elm Street, Lawrence, MA 01842	$125,000
Manchester Housing & Redevelopment Authority, 198 Hanover Street, Manchester, NH 03104	$124,292
Providence Housing Authority, 100 Broad Street, Providence, RI 02903–4129	$125,000
Perth Amboy Housing Authority, P.O. Box 390, Perth Amboy, NJ 08862–0390	$114,848
Irvington Housing Authority, 624 Nye Ave, Irvington, NJ 07111–2302	$119,000
Jersey City Housing Authority, 400 U.S. Highway 1, Jersey City, NJ 07306–6731	$117,160
Albany Housing Authority, 4 Lincoln Square, Albany, NY 12202–1637	$125,000
Syracuse Municipal Housing Authority, 516 Burt Street, Syracuse, NY 13202–3999	$125,000
Housing Authority Of Baltimore City, 417 E. Fayette St., Baltimore, MD 21202	$125,000
Housing Authority of Cumberland, 635 East First St., Cumberland, MD 21502	$124,042
Housing Opportunity Commission, Montgomery County, 10400 Detrick Avenue, Kensington, MD 20895	$125,000
Lackawanna County Housing Authority, 2019 W. Pine Street, Dunmore, PA 18512–0079	$124,557
Pittsburgh Housing Authority, 200 Ross St., Pittsburgh, PA 15219–2068	$88,304
Portsmouth Redevelopment & Housing Authority, P.O. Box 1098, Portsmouth, VA 23705–1098	$38,255

APPENDIX A—FISCAL YEAR 1994, PUBLIC AND INDIAN HOUSING, RECIPIENTS OF FINAL FUNDING DECISIONS—Continued

[Program name: Public and Indian Housing Youth Sports Program (YSP); Statute: Public Law 100–625 Signed November 28, 1990 and Amended in Public Law 102–550 Signed October 28, 1992]

Funding recipient (name and address)	Amount approved
Richmond Redevelopment & Housing Authority, P.O. Box 26887, Richmond, VA 23261–6887	$125,000
Waynesboro Redevelopment & Housing Authority, P.O. Box 1138, Waynesboro, VA 22980–0821	$125,000
Housing Authority of the City of Montgomery, 1020 Bell St., Montgomery, AL 36104	$125,000
Housing Authority of the City of Alexander City, P.O. Box 788, Alexander City, AL 35010–0788	$120,000
Housing Authority of the City of Daytona Beach, 118 Cedar Street, Daytona Beach, FL 32114–4904	$95,677
Tampa Housing Authority, 1514 Union Street, Tampa, FL 33607	$125,000
Housing Authority of the City of Orlando, 300 Reeves Court, Orlando, FL 32801–3199	$125,000
Hialeah Housing Authority, 70 East 7th Street, Hialeah, FL 33010–4465	$125,000
Panama City Housing Authority, 804 E. 15th Street, Panama City, FL 32405	$125,000
Dade County HUD, 1401 NW 7th Street, Miami, FL 33125	$125,000
Housing Authority of the City of Eustis, 1000 Wall Street, Eustis, FL 32726	$78,520
Housing Authority of the City of Ft. Pierce, 707 N. 7th St., Ft. Pierce, FL 34950	$125,000
Housing Authority of the City of Atlanta, 739 W. Peachtree, NE, Atlanta, GA 30365	$105,800
Housing Authority of the City of Savannah, P.O. Box 1179, Savannah, GA 31402–1179	$124,968
Housing Authority of the City of Winder, P.O. Box 505, Winder, GA 30680–0505	$125,000
Housing Authority of the City of Macon, P.O. Box 4928, Macon, GA 31208–4928	$125,000
Housing Authority of Louisville, 420 South Eighth St., Louisville, KY 40203	$125,000
Housing Authority of Covington, 2940 Madison Ave., Covington, KY 41015	$125,000
Housing Authority of Morgantown, P.O. Box 628, Morgantown, KY 42261	$125,000

APPENDIX A—FISCAL YEAR 1994, PUBLIC AND INDIAN HOUSING, RECIPIENTS OF FINAL FUNDING DECISIONS—Continued

[Program name: Public and Indian Housing Youth Sports Program (YSP); Statute: Public Law 100–625 Signed November 28, 1990 and Amended in Public Law 102–550 Signed October 28, 1992]

Funding recipient (name and address)	Amount approved
Housing Authority of Fulton, 200 N. Highland Dr., Fulton, KY 42041	$26,684
Housing Authority of the City of Jackson, P.O. Box 11327, Jackson, MS 39283–1327	$101,497
Housing Authority of the City of Laurel, P.O. Drawer 2910, Laurel, MS 39442	$122,789
Housing Authority of the City of Greenville, P.O. Box 1426, Greenville, NC 27835–1426	$125,000
Housing Authority of the City of Greensboro, P.O. Box 21287, Greensboro, NC 27420	$125,000
Statesville Housing Authority, 433 S. Meeting St., Statesville, NC 28677	$111,180
Housing Authority of the City of High Point, P.O. Box 1779, High Point, NC 27261	$125,000
Fort Mill Housing Authority, 105 Bozeman Drive, Fort Mill, SC 29715–2503	$22,922
Cleveland Housing Authority, P.O. Box 2846, Cleveland, TN 37311–2846	$124,785
Seminole Tribe of Florida, 3101 Northwest 63rd St., Hollywood, FL 33024	$124,795
Housing Authority East St. Louis, 700 N 20th St, East St. Louis, IL 62205	$125,000
Housing Authority City Bloomington, 104 E Wood, Bloomington, IL 61701–6768	$125,000
Housing Authority City Danville, P.O. Box 312, Danville, IL 61834–0312	$125,000
East Chicago Housing Authority, P.O. Box 498, East Chicago, IN 46312–0498	$125,000
Evansville Housing Authority, 411 South East 8th, Evansville, IN 47713	$125,000
Fort Wayne Housing Authority, 2013 South Anthony, Fort Wayne, IN 46869–3489	$124,800
Pleasant Point Passamaquoddy Reserv. Housing Auth., P.O. Box 339, Highway 190, Perry, ME 04667	$125,000
Inkster Housing Commission, 4500 Inkster Road, Inkster, MI 48141–1871	$119,000
Marquette Housing Commission, 316 Pine Street, Marquette, MI 49855	$94,709

APPENDIX A—FISCAL YEAR 1994, PUBLIC AND INDIAN HOUSING, RECIPIENTS OF FINAL FUNDING DECISIONS—Continued

[Program name: Public and Indian Housing Youth Sports Program (YSP); Statute: Public Law 100–625 Signed November 28, 1990 and Amended in Public Law 102–550 Signed October 28, 1992]

Funding recipient (name and address)	Amount approved
Saginaw Chippewa Housing Authority, 2451 Nish-Na-Be-Anong Rd., Mt. Pleasant, MI 48858	$125,000
Sault Ste. Marie Tribal Housing Authority, 2218 Shunk Road, Sault Ste. Marie, MI 49783	$125,000
Mississippi Band of Choctaw Indians, P.O. Box 6010 Choctaw Bra, Philadelphia, MS 39350	$124,000
Qualla Housing Authority, Acquoni Road P.O. Box 17, Cherokee, NC 28719–1749	$125,000
Lucas Metropolitan Housing Authority, P.O. Box 477, Toledo, OH 43692–0477	$125,000
Housing Authority of the City of Milwaukee, P.O. Box 324, Milwaukee, WI 53202–3669	$125,000
Lac du Flambeau Chippewa Housing Authority, P.O. Box 187, Lac du Flambeau, WI 54538–0187	$121,474
Housing Authority of the City of Malvern, Box 550, Malvern, AR 72104–0550	$125,000
Housing Authority of the City of Hot Springs, Box 1257, Hot Springs, AR 71901–1257	$125,000
Housing Authority of the City of Paragould, Box 137, Paragould, AR 72450–0137	$64,944
Housing Authority of Houma, 332 West Park Avenue, Houma, LA 70364	$31,444
Housing Authority of the County of Santa Fe, 52 Calmino de Jacobo, Santa Fe, NM 87501–9203	$125,000
Oklahoma City Housing Authority, 1700 NE Fourth St., Oklahoma City, OK 73117	$125,000
Housing Authority of the City of Tulsa, 415 E. Independence, Tulsa, OK 74106–5213	$72,390
Choctaw Nation, P.O. Box G, Hugo, OK 74743	$125,000
Comanche Tribe, P.O. Box 1671, Lawton, OK 73502–1671	$125,000
Delaware Tribe Housing Authority, P.O. Box 334, Chelsea, OK 74016–0334	$125,000
Sac & Fox Tribe of Oklahoma, P.O. Box 1252, Shawnee, OK 74801–1252	$125,000

APPENDIX A—FISCAL YEAR 1994, PUBLIC AND INDIAN HOUSING, RECIPIENTS OF FINAL FUNDING DECISIONS—Continued

[Program name: Public and Indian Housing Youth Sports Program (YSP); Statute: Public Law 100–625 Signed November 28, 1990 and Amended in Public Law 102–550 Signed October 28, 1992]

Funding recipient (name and address)	Amount approved
Starr County Housing Authority, P.O. Box 50, Rio Grande City, TX 78582–0050	$93,037
San Antonio Housing Authority, P.O. Drawer 1300, San Antonio, TX 78295–1300	$124,728
Housing Authority of Dallas, 3939 N. Hampton Rd., Dallas, TX 75212–0000	$125,000
Housing Authority of Forth Worth, P.O. Box 430, Forth Worth, TX 76101–0430	$125,000
Kansas City, Kansas Housing Authority, 1124 North 9th Street, Kansas City, KS 66101–2197	$119,700
Housing Authority of the City of Potosi, 103 W. Citadel, Potosi, MO 63664–1801	$111,610
Housing Authority of Saint Louis County, P.O. Box 23886, St. Louis, MO 63121–0580	$125,000
Housing Authority of City of Lakewood, 445 S. Allison Pkwy, Lakewood, CO 80226–3105	$120,016
Helena Housing Authority, 812 Abbey Street, Helena, MT 59601	$122,485
Crow Tribal Housing Authority, P.O. 99, Crow Agency, MT 59022	$125,000
Salish-Kootenai Housing Authority, P.O. Box 38, Pablo, MT 59855	$123,000
Turtle Mountain Housing Authority, P.O. Box 620, Belcourt, ND 58316	$125,000
Lower Brule Housing Authority, P.O. Box 183, Lower Brule, SD 57548	$125,000
Rosebud Housing Authority, P.O. Box 69, Rosebud, SD 57570–0069	$124,730
Housing Authority of the County of Salt Lake, 1962 S. 200 East, Salt Lake City, UT 84115	$125,000
Nogales Housing Authority, P.O. Box 777, Nogales, AZ 85628–0777	$125,000
City of Tucson Community Services Department, P.O. Box 27210, Tucson, AZ 85726–7210	$71,801
Pinal County Housing Department, 970 11 Mile Corned, Casa Grande, AZ 85222–9621	$125,000

APPENDIX A—FISCAL YEAR 1994, PUBLIC AND INDIAN HOUSING, RECIPIENTS OF FINAL FUNDING DECISIONS—Continued

[Program name: Public and Indian Housing Youth Sports Program (YSP); Statute: Public Law 100–625 Signed November 28, 1990 and Amended in Public Law 102–550 Signed October 28, 1992]

Funding recipient (name and address)	Amount approved
Phoenix Housing Department, 830 E. Jefferson, Phoenix, AZ 85034–2230	$125,000
Glendale Community Housing Services Department, 6842 N. 61st Ave., Glendale, AZ 85301–3199	$121,741
Flagstaff Housing Authority, P.O. Box 1387, Flagstaff, AZ 86002–1387	$125,000
Chandler Housing and Redevelopment Division, 99 N. Delaware Street, Chandler, AZ 85225–5577	$125,000
Navajo Housing Authority, P.O. Box 387, Window Rock, AZ 86515	$52,100
San Diego Housing Commission, 1625 Newton, San Diego, CA 92113	$125,000
Housing Authority of the City of Los Angeles, P.O. Box 17157, Los Angeles, CA 90017	$125,000
Housing Authority of the City of Oxnard, 1470 Colonia Rd., Oxnard, CA 93030–3714	$125,000
Housing Authority of the County of Kern, 525 Roberts Lane, Bakersfield, CA 93308–4799	$125,000
Oakland Housing Authority, 1619 Harrison Street, Oakland, CA 94612	$124,971
Housing Authority of the County of Marin, P.O. Box 4282, San Rafael, CA 94913–4282	$94,900
Sacramento City Housing & Redevelopment Agency, P.O. Box 1834, Sacramento, CA 95812–1834	$125,000
State of Hawaii Housing Authority, P.O. Box 17907, Honolulu, HI 96817	$125,000
Housing Authority of the City of Las Vegas, 420 North 10th Street, Las Vegas, NV 89125	$125,000
Reno-Sparks Indian Housing Authority, 15–A Reservation Rd., Reno, NV 89502	$119,934
Interior Regional Housing Authority, 828 27th Avenue, Fairbanks, AK 99701–6918	$124,324
HA and Community Services Agency of Lane County, 177 Day Island Rd., Eugene, OR 97401	$125,000

APPENDIX A—FISCAL YEAR 1994, PUBLIC AND INDIAN HOUSING, RECIPIENTS OF FINAL FUNDING DECISIONS—Continued

[Program name: Public and Indian Housing Youth Sports Program (YSP); Statute: Public Law 100–625 Signed November 28, 1990 and Amended in Public Law 102–550 Signed October 28, 1992]

Funding recipient (name and address)	Amount approved
Housing Authority of the County of Clackamas, 13930 S. Gain Street, Oregon City, OR 97045	$94,768
Housing Authority of Portland, 135 SW Ash, Portland, OR 97204	$125,000
Housing Authority of the City of Tacoma, 1728 E. 44th St., Tacoma, WA 98404–4699	$125,000
Housing Authority of Snohomish County, 3425 Broadway, Everett, WA 98201–5095	$125,000
Makah Housing Authority, P.O. Box 88, Neah Bay, WA 98357–0088	$124,999
Port Gamble S'Klallam Housing Authority, 31912 Little Boston Road, Kingston, WA 98346–0155	$124,995
Total number of grant awards	113
Total dollars awarded	$13,125,000

Dated: April 22, 1996.

Michael B. Janis,

General Deputy Assistant Secretary for Public and Indian Housing.

[FR Doc. 96–10284 Filed 4–24–96; 8:45 am]

BILLING CODE 4210–33–M

DEPARTMENT OF THE INTERIOR

Bureau of Land Management

[OR–050–1110–00:G6–0123]

Shooting Restriction on Public Lands; Oregon

April 15, 1996.

AGENCY: Bureau of Land Management, Interior.

ACTION: Notice is hereby given that the area as legally described below is seasonally closed to shooting.

LEGAL DESCRIPTION: This closure order applies to all areas within Township 16 South, Range 12 East, Section 9, NE of the SW; Section 9, SE of the SW; and Section 9, NW of the SE.

Effective immediately, all areas as described above are closed to shooting between January 1 and August 31, annually. ''Shooting'', in this closure, is defined as the discharge of firearms. A firearm is defined as a weapon, by whatever name known, which is designed to expel a projectile by the action of powder and which is readily capable of use as a weapon. The purpose of this closure is to protect wildlife resources. More specifically, this closure is ordered to protect a nesting pair of golden eagles and other raptors present in the area. Currently, the occurrence of shooting at this site jeopardizes the persistence and nesting success of the golden eagles at this location. Exemptions to this closure order may be made on a case-by-case basis by the authorized officer. This emergency order will be evaluated in the Urban Interface Amendment to the Brothers/La Pine Resource Management Plan of 1989. The authority for this closure is 43 CFR 8364.1: Closure and restriction orders.

FOR FURTHER INFORMATION CONTACT: Sarah Nichols, Wildlife Biologist, BLM Prineville District Office, P.O. Box 550, Prineville, Oregon 97754, telephone (541) 416–6725.

SUPPLEMENTARY INFORMATION: Violation of this closure order is punishable by a fine not to exceed $1,000 and/or imprisonment not to exceed 12 months as provided in 43 CFR 8360.0–7.

Dated: April 15, 1996.

James G. Kenna,

Deschutes Resource Area Manager, Prineville District Office.

[FR Doc. 96–10156 Filed 4–24–96; 8:45 am]

BILLING CODE 4310–33–M

[ID–030–5101–00–D013]

Intent To Prepare a Travel Plan Amendment to the Pocatello Resource Area Management Plan, Idaho

AGENCY: Bureau of Land Management, Interior.

ACTION: Notice of Intent.

SUMMARY: Pursuant to 43 CFR 1610.3–1 (d) and 8342.2 (a), notice is hereby given that the Pocatello Resource Area, Bureau of Land Management, intends to conduct an environmental assessment for the purposes of amending its Resource Management Plan with the designation of a road suitable for vehicle use. With improvements, the proposed road will be located within the following boundaries of public lands:

Boise Meridian, Franklin County, Idaho

T. 14 S., R. 40 E.,
Sec. 9, SE¼NE¼, E½SE¼.

FOR FURTHER INFORMATION CONTACT: Jeff Steele, Pocatello Resource Area Manager, Bureau of Land Management, 1111 N. 8th St., Pocatello, Idaho 83201 (208) 236–6860.

SUPPLEMENTARY INFORMATION: The proposed amendment for the Pocatello Resource Area Management Plan would designate approximately 4,000 feet of improved road as suitable for vehicle use while simultaneously providing a grant for right-of-way along the same route. Issues anticipated from the proposal include: Wild and Scenic Eligibility status, recreational use conflicts, and possible restrictions on public use. The following resources will be considered in preparing the travel plan amendment; land status, wildlife, soils, safety, research natural area, range, threatened and endangered plants and animal species, watershed, cultural, recreation and visual. The amendment and accompanying environmental assessment (EA) will provide the basis for modifying the recreation travel plan. The times and schedules for public meetings and written comments will be announced in local news media and through the postal service. Relevant documents will be available for public review at the BLM, Pocatello Resource Area Office, Pocatello, Idaho.

Dated: April 12, 1996.

Joe Kraayenbrink,

Acting District Manager.

[FR Doc. 96–10154 Filed 4–24–96; 8:45 am]

BILLING CODE 4310–GG–P

[ID–990–1020–01]

Upper Snake River Districts Resource Advisory Council Meeting

AGENCY: Bureau of Land Management, Interior.

ACTION: Resource Advisory Council Meeting Location and Time.

SUMMARY: In accordance with the Federal Land Policy and Management Act and the Federal Advisory Committee Act of 1972 (FACA), 5 U.S.C., the Department of the Interior, Bureau of Land Management (BLM) council meeting of the Upper Snake River Districts Resource Advisory Council will be held as indicated below. The agenda includes a field examination of a fire rehabilitation and a kapuka, and a BLM manager's briefing on resources and programs. All meetings are open to the public. The public may present written comments to the council. Each formal council meeting will have a time allocated for hearing public comments. The public comment period for the council meeting is listed below. Depending on the number of persons wishing to comment, and time available,

the time for individual oral comments may be limited. Individuals who plan to attend and need further information about the meetings, or need special assistance such as sign language interpretation or other reasonable accommodations, should contact Debra Kovar at the Shoshone Resource Area Office, P.O. Box 2–B, Shoshone, ID, 83352, (208) 886–7201.

DATE AND TIME: Date is May 30, 1996, starts at 8:30 a.m. at the Natural Resource Service office in Arco, Idaho. Public comments from 8:30 a.m.–9:00 a.m.

SUPPLEMENTARY INFORMATION: The purpose of the Council is to advise the Secretary of the Interior, through the BLM, on a variety of planning and management issues associated with the management of the public lands.

FOR FURTHER INFORMATION: Contact Debra Kovar, Shoshone Resource Area Office, P.O. Box 2–B, Shoshone, ID 83352, (208) 886–7201.

Dated: April 11, 1996.

Joe Kraayenbrink,

Acting District Manager.

[FR Doc. 96–10155 Filed 4–24–96; 8:45 am]

BILLING CODE 4310–GG–P

[CO–933–96–1320–1; COC 59360]

Colorado; Notice of Invitation for Coal Exploration License Application, Bowie Resources, Ltd.

Pursuant to the Mineral Leasing Act of February 25, 1920, as amended, and to Title 43, Code of Federal Regulations, Subpart 3410, members of the public are hereby invited to participate with Bowie Resources, Ltd., in a program for the exploration of unleased coal deposits owned by the United States of America in the following described lands located in Delta County, Colorado:

T. 13 S., R.91 W., 6th P.M.
Sec. 3, lot 4, S½NW¼, and N½SW¼;
Sec. 4, lots 1 to 3, inclusive, S½NE¼, SE¼NW¼, and S½;
Sec. 5, S½;
Sec. 6, lot 1, and SE¼NE¼;
Sec. 8, E½;
Sec. 9, W½;
Sec. 16, lots 1 to 4, inclusive.

The area described contains approximately 1,958.66 acres.

The application for coal exploration license is available for public inspection during normal business hours under serial number COC 59360 at the Bureau of Land Management (BLM), Colorado State Office, 2850 Youngfield Street, Lakewood, Colorado 80215, and at the Montrose District Office, 2465 South Townsend Avenue, Montrose, Colorado 81401.

Written Notice of Intent to Participate should be addressed to the attention of the following persons and must be received by them within 30 days after publication of the Notice of Invitation in the Federal Register:

Karen Purvis, Solid Minerals Team, Resource Services, Colorado State Office, Bureau of Land Management, 2850 Youngfield Street, Lakewood, Colorado 80215

and

Bowie Resources, Ltd., P.O. Box 483, Paonia, Colorado 81428

Any party electing to participate in this program must share all costs on a pro rata basis with the applicant and with any other party or parties who elect to participate.

Dated: April 17, 1996.

Karen Purvis,

Solid Minerals Team, Resource Services.

[FR Doc. 96–10268 Filed 4–24–95; 8:45 am]

BILLING CODE 4310–JB–M

[CO–010–06–1020–00–241A]

Northwest Colorado Resource Advisory Council Meetings

AGENCY: Bureau of Land Management, Interior.

ACTION: Notice of meetings.

SUMMARY: Notice is hereby given that the next meetings of the Northwest Colorado Resource Advisory Council will be held on Thursday, May 9, 1996 in Glenwood Springs, Colorado and Tuesday, June 4, 1996 in Craig, Colorado.

DATES: Meetings are scheduled for Thursday, May 9, 1996 in Glenwood Springs, Colorado and Tuesday, June 4, 1996 in Craig, Colorado.

ADDRESSES: For further information, contact Lynda Boody, Bureau of Land Management (BLM), Grand Junction District Office, 2815 H Road, Grand Junction, Colorado 81506; Telephone (970) 244–3000; TDD (970) 244–3011.

SUPPLEMENTARY INFORMATION: All meetings are scheduled to begin at 9:00 a.m.

Thursday, May 9, 1996: This meeting will be held at the Garfield County Commissioner's Office, 109 8th St., Suite 301, Glenwood Springs, Colorado 81601.

Tuesday, June 4, 1996: This meeting will be held at the Bureau of Land Management, Little Snake Resource Area Office, 1280 Industrial Ave., Craig, Colorado 81625.

The agenda for these meetings will focus on general Council business, standards and guidelines for grazing, public involement in the NEPA process, and committee reports.

All Resource Advisory Council meetings are open to the public. Interested persons may make oral statements to the Council, or written statements may be submitted for the Council's consideration. Public comment will be taken throughout the meeting. Depending on the number of persons wishing to make oral statements, a per-person time limit may be established by the Grand Junction/Craig District Manager.

Summary minutes for the Council meeting will be maintained in the Grand Junction and Craig District Offices and will be available for public inspection and reproduction during regular business hours within thirty (30) days following the meeting.

Dated: April 16, 1996.

Richard Arcand,

Acting Grand Junction/Craig District Manager.

[FR Doc. 96–10269 Filed 4–24–96; 8:45 am]

BILLING CODE 4310–70–P

[UTU–71695]

Utah; Notice of Proposed Classification of Public Lands for State Indemnity Selection

1. The State of Utah Division of State Lands and Forestry has filed a petition for classification and application to acquire the public lands, described in paragraph 5 below, under the provisions of Sections 2275 and 2276 of the Revised Statutes, as amended (43 U.S.C. 851, 852), in lieu of certain school lands granted to the State under the Act of July 16, 1894; (28 Stat. 107), that were encumbered by other rights or reservations before the State's title could attach. This application has been assigned Serial Number UTU–71695.

2. The Bureau of Land Management will examine these lands for evidence of prior valid rights or other statutory constraints that would bar transfer. This proposed classification is pursuant to Title 43, Code of Federal Regulations, Subpart 2400; Section 7 of the Act of June 28, 1934.

3. Information concerning these lands and the proposed transfer to the State of Utah may be obtained from Mike Crocker, Utah State Office, 324 South State Street, P.O. Box 45155, Salt Lake City, Utah 84145–0155, 801–539–4118.

4. For a period of 60 days from the date of publication of this notice in the Federal Register, all persons who wish to submit comments, suggestions, or objections in connection with the proposed classification may present

their views in writing to the State Director, Bureau of Land Management, P.O. Box 45155, Salt Lake City, Utah, 84145–0155. Any adverse comments will be evaluated by the State Director who will issue a notice of determination to proceed with, modify, or cancel the action. In the absence of any action by the State Director, this classification action will become the final determination of the Department of the Interior.

As provided by Title 43 Code of Federal Regulations, Subpart 2450.4(c), public hearing may be scheduled by the State Director if he determines that sufficient public interest exists to warrant the time and expense of a hearing.

5. The lands included in the proposed classification are located in Millard County, Utah, Township 21 South, Range 19 West, Salt Lake Meridian, containing 200.00 acres.

Teresa Catlin,

Chief, Branch of Lands and Minerals Operations.

[FR Doc. 96–10270 Filed 4–24–96; 8:45 am]

BILLING CODE 4310–84–M

Fish and Wildlife Service

Notice of Receipt of Applications for Permit

The following applicants have applied for a permit to conduct certain activities with endangered species. This notice is provided pursuant to Section 10(c) of the Endangered Species Act of 1973, *as amended* (16 U.S.C. 1531, *et seq.*):

PRT–813635

Applicant: Lynn Smith, Sugarland, TX.

The applicant requests a permit to import the sport-hunted trophy of one male bontebok (*Damaliscus pygarcus dorcas*) culled from a captive herd maintained under the management program of the Republic of South Africa, for the purpose of enhancement of the survival of the species.

PRT–813752

Applicant: International Wildlife Veterinary Services, Fair Oaks, CA.

The applicant requests a permit to import serum and plasma samples taken from free-ranging black rhinoceros (*Diceros bicornis*) in South Africa for the purpose of scientific research.

PRT–813794

Applicant: Minnesota Zoological Garden, Apple Valley, MN.

The applicant requests a permit to import one captive-born male Siberian tiger (*Panthera tigris altaica*) from Far Eastern Division of the Russian Academy of Science, Vladivostok, Russia for the purpose of enhancement of the survival of the species through propagation.

PRT–813795

Applicant: St. Louis Zoological Park, St. Louis, MO.

The applicant requests a permit to import ear biopsy and hair and follicle samples from Mexican Volcano rabbits (*Romerolagus diazi*) from the Tlaloc, Pelado, Ixtaccihuatl, and Popocatepetl volcanoes and the Museode Zoologia, Facultad de Ciencias and Coleccion de Mamiferos of the Instituto de Biologia for the purpose of enhancement of the survival of the species through scientific research.

PRT–761887

Applicant: The American Museum of Natural History, New York, NY.

The applicant requests a permit to export and re-import non-living museum specimens of endangered and threatened species of plants and animals previously assessioned into the permittee's collection for scientific research.

PRT–812794

Applicant: Fred Potts IV, Juneau, AK,

The applicant requests a permit to purchase in interstate commerce Indian python (*Python molurus molurus*) from Prehistoric-Pets, Fountain Valley, CA for the purpose of enhancement of the survival of the species through propagation.

Written data or comments should be submitted to the Director, U.S. Fish and Wildlife Service, Office of Management Authority, 4401 North Fairfax Drive, Room 430, Arlington, Virginia 22203 and must be received by the Director within 30 days of the date of this publication.

Documents and other information submitted with these applications are available for review, *subject to the requirements of the Privacy Act and Freedom of Information Act,* by any party who submits a written request for a copy of such documents to the following office within 30 days of the date of publication of this notice: U.S. Fish and Wildlife Service, Office of Management Authority, 4401 North Fairfax Drive, Room 430, Arlington, Virginia 22203. Phone: (703/358–2104); FAX: (703/358–2281).

Dated: April 19, 1996.

Caroline Anderson,

Acting Chief, Branch of Permits, Office of Management Authority.

[FR Doc. 96–10116 Filed 4–24–96; 8:45 am]

BILLING CODE 4310–55–P

Availability of a Habitat Conservation Plan and Receipt of an Application for an Incidental Take Permit of Utah Prairie Dog Related to the Development of a 29-Acre Manufacturing Site by Smead Manufacturing Company, Cedar City, Iron County, UT

AGENCY: Fish and Wildlife Service, Interior.

ACTION: Notice.

SUMMARY: The Smead Manufacturing Company (Applicant) has applied to the Fish and Wildlife Service for an incidental take permit pursuant to section 10(a)(1)(B) of the Endangered species Act (Act of 1973, as amended. The Applicant has been assigned Permit Number PRT–814008. The requested permit, which is for a period not to exceed 5 years, would authorize the incidental take of the threatened Utah prairie dog (*Cynomys parvidens*), The proposed take would occur as a result of the development of a 29 acre site owned by Smead Manufacturing Company in Cedar City, Iron County, UT.

The Applicant has prepared a habitat conservation plan for the incidental take permit application. This notice is provided pursuant to section 10(c) of the Act. An Environmental Assessment will comply with the Environmental Policy Act regulations (40 CFR 1508.4).

DATES: Written comments on the habitat conservation plan and permit application must be received on or before may 28, 1996.

ADDRESSES: Requests for any of the above documents and comments of materials concerning them should be sent to the Assistant Field Supervisor, Utah Field Office, U.S. Fish and Wildlife Service, 145 East 1300 South, Suite 404, Salt Lake City, UT 84115. The documents and comments and materials received will be available for public inspection, by appointment, during normal business hours at the above address. Please refer to Permit Number PRT–814008 in all correspondence regarding these documents.

FOR FURTHER INFORMATION CONTACT: Robert D. Williams, Assistant Field Supervisor (see **ADDRESSES** above) (Telephone (801) 524–5001 extension 124, fascimile (801 524–5021).

SUPPLEMENTARY INFORMATION: Section 9 of the Endangered Species Act (Act) of 1973, as amended (16 U.S.C. 1531 *et seq.*) prohibits the ''taking'' of any threatened or endangered species, including the Utah prairie dog. However, the Fish and Wildlife Service, under limited circumstances, may issue

permits to take threatened and endangered wildlife species if such taking is incidental to, and not the purpose of, otherwise lawful activities. Regulations governing permits for threatened and endangered species are at 50 CFR 17.22.

The Smead Manufacturing Company, a corporation, wishes to construct a 312,000 square foot building and appropriate and corresponding parking, roadway and walkway facilities in Cedar City, Iron County, UT. The construction will impact approximately 29 acres of a 36.95 acre lot. The lot is presently inhabited by the Utah prairie dog, a threatened species.

The Applicant considered a no-action alternative. The Applicant's current facility is located in an earthquake zone and has recently been damaged by an earthquake. The Applicant is, also, unable to expand at its present facilities to meet current demand. The Applicant rejected the no-action alternative as being dangerous for its employees and economically unfeasible.

Authority: The authority for this action is the Endangered Species Act of 1973, as amended (16 U.S.C. 1531 *et seq.*) and the National Environmental Policy Act of 1969, as amended (42 U.S.C. 4321 *et seq.*).

Dated: April 18, 1996.

Ralph O. Morgenweck,

Regional Director, Denver, CO.

[FR Doc. 96–10271 Filed 4–24–96; 8:45 am]

BILLING CODE 4310–55–M

United States Geological Survey

Federal Geographic Data Committee (FGDC); Public Meetings of the FGDC Facilities Working Group

AGENCY: U.S. Geological Survey, Interior.

ACTION: Notice of meetings.

SUMMARY: This notice is to invite public participation in meetings of the FGDC Facilities Working Group. The major topics for these meetings are: development of a Facility/Installation ID standard and development of a utilities data dictionary.

TIME AND PLACE: 13 May 1996, from 1:00 p.m. until 4:00 p.m.; 17 June 1996, from 1:00 p.m. until 4:00 p.m.; and 15 July 1996, from 1:00 p.m. until 4:00 p.m. The meetings will be held at Headquarters U.S. Army Corps of Engineers, in Room 8222D of the Pulaski Building, 20 Massachusetts Avenue, NW, Washington, DC. The Pulaski building is located just a few blocks west of Union Station.

FOR FURTHER INFORMATION CONTACT: Jennifer Fox, FGDC Secretariat, U.S. Geological Survey, 590 National Center, 12201 Sunrise Valley Drive, Reston, Virginia 22091; telephone (703) 648–5514; facsimile (703) 648–5755; Internet ''gdc@usgs.gov''. Minutes of meetings are available by clicking on the Facilities Working Group at the FGDC Internet address http://fgdc.er.usgs.gov.

SUPPLEMENTARY INFORMATION: The FGDC is a committee of Federal Agencies engaged in geospatial activities. The FGDC Facilities Working Group specifically focuses on geospatial data issues related to facilities and facility management. A facility is an entity with location, deliberately established as a site for designated activities. A facility database might describe a factory, a military base, a college, a hospital, a power plant, a fishery, a national park, an office building, a space command center, or a prison. The database for a complex facility may describe multiple functions or missions, multiple buildings, or even a county, town, or city. The objectives of the Working Group are to: promote standards of accuracy and currentness in facilities data that are financed in whole or in party by Federal funds; exchange information on technological improvements for collecting facilities data; encourage the Federal and non-Federal communities to identify and adopt standards and specifications for facilities data; and promote the sharing of facilities data among Federal and non-Federal organizations.

Dated: April 16, 1996.

Richard E. Witmer,

Acting Chief, National Mapping Division.

[FR Doc. 96–10258 Filed 4–24–96; 8:45 am]

BILLING CODE, 4310–31–M

Bureau of Land Management

[OR–104–06–6334–00: GP6–0071]

Notice of Closure of Lands to Discharge of Firearms and To Use of Traps

SUMMARY: A closure will take effect that will ban the discharge of firearms, except by persons holding valid permits for big game hunting during seasons determined by the Oregon Department of Fish and Wildlife, licensed upland game bird hunters during authorized seasons, and Federal, State or County employees during the course of their official duties or by persons permitted in writing by the authorized officer. Further, use of traps to take wildlife is banned except for persons permitted in writing by the authorized officer to take depredating animals or by persons involved in scientific or field studies that have been approved by the authorized officer. The use of firearms and traps is restricted, except as noted, on the 6,581 acres of public lands contained within the boundaries of the Roseburg Districts, North Bank Habitat Management Area (NBHMA) . With the exception of the persons permitted or otherwise authorized to use firearms or traps, all recreational shooting, with rifles, shotguns, pistols, pellet rifle, crossbow, bow or any other device capable of firing a projectile is prohibited within the North Bank Habitat Management Area unless permitted in writing by the authorized officer.

Prohibiting the use of firearms and traps within the NBHMA is necessary to reduce impacts to non-game, threatened and/or endangered or sensitive species of wildlife and to avoid conflict with recreational users of the lands through a significant portion of the year. This will allow more opportunities for visitors to observe native wildlife species and allow for increased safety for visitors and workers, while at the same time allow controlled recreational hunting.

The legal land description for lands affected by this closure, include all or portions of the following:

Willamette Principal Meridian, Douglas County, Oregon

T. 25 S., R. 4 W., Secs. 31, 32, and 33.
T. 26 S., R. 4 W., Secs. 4, 5, 6, 7, 8, 17, and 18.
T. 25 S., R. 5 W., Secs. 35 and 36.
T. 26 S., R. 5 W., Secs. 1, 2, 11, 12, 13, and 14.

Containing approximately 6,581 acres.

EFFECTIVE DATE: April 25, 1996. This ban will remain in effect until rescinded through a Federal Register notice or upon completion of an approved Habitat Management Plan for the North Bank Habitat Management Area.

FOR FURTHER INFORMATION CONTACT: Jerry Mires, Wildlife Biologist, Mt. Scott Resource Area, 777 NW Garden Valley Blvd., Roseburg, Oregon 97470, (541) 440–4930.

SUPPLEMENTARY INFORMATION: Maps showing the boundaries of the North Bank Habitat Management Area are available for public review at the Roseburg District Office. The lands restricted under this order will be posted at points of access. The authority for closure with a supplementary rule is found in 43 CFR Part 8364. Any person who fails to comply with the closure may be subject to penalties provided in 43 CFR 8360.0–7: Violations are punishable by a fine not to exceed $1,000 and/or imprisonment not to exceed 12 months.

Dated: April 16, 1996.

Gail S. Schaefer,

Area Manager, Mt. Scott Resource Area.

[FR Doc. 96–10263 Filed 4–24–96; 8:45 am]

BILLING CODE 4310–33–P

DEPARTMENT OF JUSTICE

Antitrust Division

Notice Pursuant to the National Cooperative Research and Production Act of 1993—Fuel Filtration Cooperative Research Program

Notice is hereby given that, on February 29, 1996, pursuant to Section 6(a) of the National Cooperative Research and Production Act of 1993, 15 U.S.C. § 4301 *et seq.* (''the Act''), Southwest Research Institute (''SwRI'') has filed written notifications simultaneously with the Attorney General and the Federal Trade Commission disclosing the extension of the period of performance. The notifications were filed for the purpose of extending the Act's provisions limiting the recovery of antitrust plaintiffs to actual damages under specified circumstances. Specifically, the period of performance was extended to July 15, 1995.

No other changes have been made in either the membership or planned activity of the group research project. Membership in this group research project remains open, and SwRI intends to file additional written notification disclosing all changes in membership.

On October 5, 1994, SwRI filed its original notification pursuant to Section 6(a) of the Act. The Department of Justice published a notice in the Federal Register pursuant to Section 6(b) of the Act on December 30, 1994, (59 FR 67733–34).

The last notification was filed with the Department on May 4, 1995. A notice was published in the Federal Register pursuant to Section 6(b) of the Act on February 23, 1996, (61 FR 7020).

Constance K. Robinson,

Director of Operations, Antitrust Division.

[FR Doc. 96–10152 Filed 4–24–96; 8:45 am]

BILLING CODE 4410–01–M

Notice Pursuant to the National Cooperative Research and Production Act of 1993—Corporation for National Research Initiatives—Cross Industry Working Team Project

Notice is hereby given that, on October 24, 1995, pursuant to Section 6(a) of the National Cooperative Research and Production Act of 1993, 15 U.S.C. 4301 *et seq.* (''the Act''), the Corporation for National Research Initiatives (''CNRI'') has filed written notifications simultaneously with the Attorney General and the Federal Trade Commission disclosing changes in the membership of the Cross Industry Working Team Project (''XIWT''). The notifications were filed for the purpose of extending the Act's provisions limiting the recovery of antitrust plaintiffs to actual damages under specified circumstances. Specifically, the following additional parties have become Primary Members of XIWT: Cisco Systems, Inc., San Jose, CA; National Institute for Standards and Technology, Reston, VA. The following additional parties have become Associate Members of XIWT: Com21, Inc., Mountain View, CA; CyberCash, Inc., Reston, VA; DynCorp ATS, Reston, VA; Electronic Publishing Resources, Inc., Sunnyvale, CA; and QuantumLink Corporation, Long Beach, CA. The following parties have discontinued membership in XIWT: American Express; Concentric Research Corporation; and Financial Services Technology Consortium.

No other changes have been made in either the membership or planned activity of the group research project. Membership in this group research project remains open, and CNRI intends to file additional written notifications disclosing all changes in membership. On September 28, 1993, CNRI filed its original notification pursuant to Section 6(a) of the Act. The Department of Justice published a notice in the Federal Register pursuant to Section 6(b) of the Act on December 17, 1993 (58 FR 66022). The last notification was filed with the Department on March 8, 1995. A notice was published in the Federal Register pursuant to Section 6(b) of the Act on April 24, 1995 (60 FR 20119).

Constance K. Robinson,

Director of Operations, Antitrust Division.

[FR Doc. 96–10216 Filed 4–24–96; 8:45 am]

BILLING CODE 4410–01–M

Notice Pursuant to the National Cooperative Research and Production Act of 1993; Auto Body Consortium, Inc., Intelligent Resistance Welding Joint Venture

Notice is hereby given that, on December 26, 1995, pursuant to Section 6(a) of the National Cooperative Research and Production Act of 1993, 15 U.S.C. 4301 *et seq.* (''the Act''), Auto Body Consortium, Inc. has filed written notifications simultaneously with the Attorney General and the Federal Trade Commission disclosing changes in its membership. The notifications were filed for the purpose of extending the Act's provisions limiting the recovery of antitrust plaintiffs to actual damages under specified circumstances. Specifically, American Iron and Steel Institute, Washington, DC; Battelle, Columbus, OH; and Lobdell-Emery, Alma, MI have become members of the Joint Venture. Additionally, the following companies have withdrawn their membership from the Joint Venture: Alcoa, Alcoa Center, PA; Bethlehem Steel Corp., Southfield, MI; Computer Integrated Welding, Auburn Hills, MI; Detroit Center Tool, Detroit, MI; and Grossel Tool Company, Fraser, MI.

No other changes have been made in either the membership or planned activities of the Joint Venture. Membership remains open, and the Consortium intends to file additional written notification disclosing any changes in membership.

On September 8, 1995, the Auto Body Consortium filed its original notification pursuant to Section 6(a) of the Act. The Department of Justice published a notice in the Federal Register pursuant to Section 6(b) of the Act on December 6, 1995 (60 FR 62476). An additional notification was filed on September 22, 1995 pursuant to Section 6(a) of the Act. The Department of Justice published a notice in the Federal Register pursuant to Section 6(b) of the Act on April 12, 1996 (61 FR 16267).

Constance K. Robinson,

Director of Operations, Antitrust Division.

[FR Doc. 96–10217 Filed 4–24–96; 8:45 am]

BILLING CODE 4410–01–M

Notice Pursuant to the National Cooperative Research and Production Act of 1993—International Pharmaceutical Aerosol Consortium for Toxicology Testing of HFA–227 (IPACT–II)

Notice is hereby given that, on May 25, 1995, pursuant to Section 6(a) of the National Cooperative Research and Production Act of 1993, 15 U.S.C. § 4301 *et seq.* (''the Act''), The International Pharmaceutical Aerosol Consortium for Toxicology Testing of HFA–227 (''IPACT–II'') has filed written notifications simultaneously with the Attorney General and the Federal Trade Commission disclosing (1) a Restated IPACT–II Formation Agreement and (2) the addition of a new member. The notifications were filed for the purpose of extending the Act's provisions limiting the recovery of antitrust plaintiffs to actual damages under specified circumstances. Specifically,

the following has become a member of IPACT–II: Northern Healthcare Limited Harlow, Essex, England. The Restated Formation Agreement become effective on May 8, 1995, and supersedes the prior agreement under which the Consortium operated. The only significant change in IPACT–II created by the new Agreement is that membership in IPACT–II is now open to any party that (1) has a commercial interest in pharmaceutical aerosols and (2) undertakes to pay its share of IPACT–II costs.

No other changes have been made in either the membership or planned activity of IPACT–II. Membership in this group research project is open, and IPACT–II intends to file additional written notification disclosing all changes in membership.

On February 21, 1991, IPACT–II filed its original notification pursuant to Section 6(a) of the Act. The Department of Justice published a notice in the Federal Register pursuant to Section 6(b) of the Act on April 2, 1991 (56 13489).

The last notification was filed with the Department on January 14, 1993. A notice was published in the Federal Register pursuant to Section 6(b) of the Act on April 27, 1993 (58 FR 25657).

Constance K. Robinson,

Director of Operations, Antitrust Division.

[FR Doc. 96–10264 Filed 4–24–96; 8:45 am]

BILLING CODE 4410–01–M

Notice Pursuant to the National Cooperative Research and Production Act of 1993—International Pharmaceutical Aerosol Consortium for Toxicology Testing of HFA–134a (IPACT–I)

Notice is hereby given that, on May 25, 1995, pursuant to Section 6(a) of the National Cooperative Research and Production Act of 1993, 15 U.S.C. § 4301 *et seq.* (''the Act''), The International Pharmaceutical Aerosol Consortium for Toxicology Testing of HFA–134a (''IPACT–I'') has filed written notifications simultaneously with the Attorney General and the Federal Trade Commission disclosing (1) a Restated IPACT–I Formation Agreement and (2) the addition of a new member. The notifications were filed for the purpose of extending the Act's provisions limiting the recovery of antitrust plaintiffs to actual damages under specified circumstances. Specifically, the following has become a new member to the IPACT–I: TAP Holdings, Inc., Deerfield, IL. The Restated Formation Agreement became effective on May 8, 1995, and supersedes the prior agreement under which the Consortium operated. The only significant change created by the new Agreement is that membership in IPACT–I is now open to any party that: (1) has a commercial interest in pharmaceutical aerosols, and (2) undertakes to pay its share of IPACT–I costs.

No other changes have been made in either the membership or planned activity of IPACT–I. Membership in this group research project remains open, and IPACT–I intends to file additional written notification disclosing all changes in membership.

On August 7, 1990, IPACT–I filed its original notification pursuant to Section 6(a) of the Act. The Department of Justice published a notice in the Federal Register pursuant to Section 6(b) of the Act on September 6, 1990 (55 Fed. Reg. 36710).

The last notification was filed with the Department on January 14, 1993. A notice was published in the Federal Register pursuant to Section 6(b) of the Act on April 27, 1993 (58 FR 25657).

Constance K. Robinson,

Director of Operations, Antitrust Division.

[FR Doc. 96–10265 Filed 4–24–96; 8:45 am]

BILLING CODE 4410–01–M

Notice Pursuant to the National Cooperative Research and Production Act of 1993; Industrial Macromolecular Crystallography Association (''IMCA'')

Notice is hereby given that on April 8, 1996, pursuant to Section 6(a) of the National Cooperative Research and Production Act of 1993, 15 U.S.C. § 4301 *et seq.* (''the Act''), Industrial Macromolecular Crystallography Association (IMCA) has filed written notifications simultaneously with the Attorney General and the Federal Trade Commission disclosing changes in its membership status. The notifications were filed for the purpose of extending the Act's provisions limiting the recovery of antitrust plaintiffs to actual damages under specified circumstances. Specifically, Sanofi Winthrop, Inc., New York, NY, has withdrawn as a member and Schering-Plough Research Institute, a corporation of Delaware, with its principal place of business in Kenilworth, NJ, has become a member. In addition, two members have changed their legal names: Glaxo, Inc., has changed its name to Glaxo Wellcome, Inc., Research Triangle Park, NC and Miles, Inc., has changed its name to Bayer Corporation, Pittsburgh, PA.

No other changes have been made in either the membership or planned activity of the group research project. Membership in this group research project remains open, and IMCA intends to file additional written notification disclosing all changes in membership.

On October 23, 1990, IMCA filed its original notification pursuant to Section 6(a) of the Act. The Department of Justice published a notice in the Federal Register pursuant to Section 6(b) of the Act on December 3, 1990 (55 FR 49953).

The last notification was filed with the Department on January 19, 1995. A notice was published in the Federal Register pursuant to Section 6(b) of the Act on December 21, 1995 (60 FR 66324).

Constance K. Robinson,

Director of Operations, Antitrust Division.

[FR Doc. 96–10266 Filed 4–24–96; 8:45 am]

BILLING CODE 4410–01–M

Federal Bureau of Investigation

Criminal Justice Information Services (CJIS) Advisory Policy Board

The Criminal Justice information Services (CJIS) Advisory Policy Board will meet on June 12–13, 1996, from 9 a.m. until 5 p.m., at the Holiday Inn Downtown/Riverfront, 200 North Fourth Street, St. Louis, Missouri, telephone 314–621–8200, to formulate recommendations to the Director, Federal Bureau of Investigation (FBI) on the security, policy and operation of the National Crime Information Center (NCIC), NCIC 2000, the Integrated Automated Fingerprint Identification System (IAFIS), and the Uniform Crime Reporting (UCR) and National Incident Based Reporting System (NIBRS) programs.

The topics to be discussed will include the progress of the NCIC 2000 and IAFIS projects, status of the Brady Handgun Violence Prevention Act, and other topics related to the management of the FBI's criminal history information systems.

The meeting will be open to the public on a first-come, first-seated basis. Any member of the public may file a written statement concerning the FBI CJIS Division programs or related matters with the Board, before or after. Anyone wishing to address this session of the meeting should notify the Designated Federal Employee, at least 24 hours prior to the start of the session. The notification may be by mail, telegram, cable, facsimile, or a hand-delivered note. It should contain the requestor's name; corporate designation, consumer affiliation, or Government designation; along with a short statement describing the topic to be addressed; and the time needed for

presentation. A nonmember requestor will ordinarily be allowed not more than 15 minutes to present a topic, unless specifically approved by the Chairman of the Board.

Inquiries may be addressed to the Designated Federal Employee, Mr. Demery R. Bishop, Section Chief, Programs Development Section, CJIS Division, FBI, 935 Pennsylvania Avenue, Northwest, Washington, DC 20537–9700, telephone 202–324–5084, facsimile 202–324–8906.

Demery R. Bishop,

Section Chief, Programs Development Section, Federal Bureau of Investigation, Designated Federal Employee.

[FR Doc. 96–10149 Filed 4–24–96; 8:45 am]

BILLING CODE 4410–02–M

Office of Justice Programs

National Institute of Justice

[OJP (NIJ) No.1077]

RIN 1121–ZA32

National Institute of Justice Reissue of a Solicitation for an Assessment of the HIDTA Program: High Intensity Drug Trafficking Areas

AGENCY: U.S. Department of Justice, Office of Justice Programs, National Institute of Justice.

ACTION: Announcement of the availability of the National Institute of Justice Reissue of a Solicitation for an Assessment of the HIDTA Program: High Intensity Drug Trafficking Areas.

ADDRESSES: National Institute of Justice, 633 Indiana Avenue, NW., Washington, D.C. 20531.

DATES: The deadline for receipt of proposals is close of business on June 4, 1996.

FOR FURTHER INFORMATION CONTACT: James Trudeau at (202) 307–1355, National Institute of Justice, 633 Indiana Avenue, NW., Washington, DC 20531.

SUPPLEMENTARY INFORMATION: The following supplementary information is provided:

Authority

This action is authorized under the Omnibus Crime Control and Safe Streets Act of 1968, sections 201–203, as amended, 42 U.S.C. 3721–3723 (1988).

Background

High Intensity Drug Trafficking Areas (HIDTA's) are areas identified as having the most critical drug trafficking problems that adversely impact the rest of the country. The Director of the Office of National Drug Control Policy designates areas as HIDTA's pursuant to the Anti-Drug Abuse Act of 1988, as amended. In 1990, five areas were designated as HIDTA's—Houston, Los Angeles, Miami, New York City, and the Southwest Border, which extends from California through Texas.

The National Institute of Justice is soliciting proposals to conduct an assessment of the HIDTA program in the five original sites. Funding for this award is tentatively set at $200,000. Interested organizations should call the National Criminal Justice Reference Service (NCJRS) at 1–800–851–3420 to obtain a copy of ''National Institute of Justice Solicitation for an Evaluation of the HIDTA Program: High Intensity Drug Trafficking Areas'' (refer to document no. SL000143). The solicitation is available electronically via the NCJRS Bulletin Board, which can be accessed via Internet. Telnet to ncjrsbbs.aspensys.com, or gopher to ncjrs.aspensys.com 71. For World Wide Web access, connect to the NCJRS Justice Information Center at http://www.ncjrs.org. Those without Internet access can dial the NCJRS Bulletin Board via modem: dial 301–738–8895. Set modem at 9600 baud, 8–N–1.

Jeremy Travis,

Director, National Institute of Justice.

[FR Doc. 96–10272 Filed 4–24–96; 8:45 am]

BILLING CODE 4410–18–P

Lodging of Consent Decree Pursuant to the Resource Conservation and Recovery Act

In accordance with Departmental policy, 28 CFR 50.7, notice is hereby given that on April 5, 1996 a proposed consent decree in *United States of America* v. *Cambridge Plating Company, Inc.*, Civil Action No. 96–10722 RCL, has been lodged with the United States District Court for the District of Massachusetts. The United States' complaint, filed at the same time as the consent decree, sought penalties and injunctive relief under the Resources Conservation and Recovery Act, 42 U.S.C. § 6901, *et seq.* The consent decree provides that the defendant will pay $40,000 in civil penalties to the United States over three and one half years and also provides for injunctive relief. The decree further requires defendant to perform two Supplemental Environmental Projects.

The Department of Justice will receive comments relating to the proposed consent decree for a period of thirty (30) days from the date of this publication. Comment should be addressed to the Assistant Attorney General, Environment and Natural Resources Division, Department of Justice, Washington, D.C. 20530, and should refer to *United States* v. *Cambridge Plating Company, Inc.*, D. J. Ref. 90–7–1–680A.

The proposed consent decree may be examined at the office of the United States Attorney, 1107 John W. McCormack Federal Building, U.S. Post Office and Courthouse, Boston, Ma. 02109 and at the Region I office of the Environmental Protection Agency, One Congress St., Boston, Ma. 02203. The proposed consent decree may also be examined at the Consent Decree Library, 1120 G St., N.W., 4th Floor, Washington, D.C. 20005, 202–624–0892. A copy of the proposed consent decree may be obtained in person or by mail from the Consent Library, 1120 G St., N.W., 4th Floor, Washington, D.C. 20005. In requesting a copy, please enclose a check in the amount of $8.00 (25 cents per page reproduction cost) payable to the ''Consent Decree Library.''

Joel M. Gross,

Chief, Environmental Enforcement Section, Environment & Natural Resources Division.

[FR Doc. 96–10153 Filed 4–24–96; 8:45 am]

BILLING CODE 4410–01–M

Notice of Consent Decree in Comprehensive Environmental Response, Compensation and Liability Action

In accordance with the Department Policy, 28 CFR § 50.7, notice is hereby given that a Consent Decree in *United States* v. *Keystone Sanitation Company, Inc., et al.*, Civil Action No. 1: CV–93–1482, was lodged with the United States District Court for the Middle District of Pennsylvania on April 5, 1996.

On September 27, 1993, the United States filed a complaint against the owners and operator of, and certain generators to, the Keystone Landfill Superfund Site (the ''Site''), pursuant to Section 107 (a) of the Comprehensive Environmental Response, Compensation and Liability Act (CERCLA), 42 U.S.C. 9607(a). Several of the defendants named third and fourth parties to the action, including 97 of the defendants in the proposed Consent Decree. This de micromis Consent Decree resolves the liability of the 97 third and fourth-party defendants for the response costs incurred and to be incurred by the United States at the Site. The defendants included in the proposed de micromis Consent Decree will pay $1 each.

The Department of Justice will accept written comments relating to the proposed Consent Decree for thirty (30)

days from the date of publication of this notice. Please address comments to the Assistant Attorney General, Environment and Natural Resources Division, Department of Justice, P.O. Box 7611, Ben Franklin Station, Washington, DC 20044 and refer to *United States* v. *Keystone Sanitation Company. Inc. et al.,* DOJ No. 90–11–2–656A.

Copies of the proposed Consent Decree may be examined at the Office of the United States Attorney, Middle District of Pennsylvania, Federal Building and Courthouse, 228 Walnut Street, Room 217, Harrisburg, Pennsylvania, 17108; Region III Office of the Environmental Protection Agency, 841 Chestnut Building, Philadelphia, Pennsylvania 19107; and at the Consent Decree Library, 1120 G Street, NW., 4th Floor, Washington, DC 20005 (202) 624–0892). A copy of the proposed Decree may be obtained in person or by mail from the Consent Decree Library, 1120 G Street, NW., 4th Floor, Washington, D.C. 2005. When requesting a copy of the proposed Consent Decree, please enclose a check in the amount of $1.75 (twenty-five cents per page reproduction costs) payable to the ''Consent Decree Library.''

Joel M. Cross,

Chief, Environmental Enforcement Section, Environment and Natural Resources Division, U.S. Department of Justice.

[FR Doc. 96–10212 Filed 4–24–96; 8:45 am]

BILLING CODE 4410–01–M

Notice of Lodging of Consent Decrees Pursuant to the Resource Conservation and Recovery Act of 1976, as Amended, 42 U.S.C. 6901 et seq.

Notice is hereby given that a proposed consent decree in *United States* versus *Flour City Architectural Metals, Inc., et al.,* Civil Action No. C2–96–327, was lodged on March 28, 1996, with the United States District Court for the Southern District of Ohio. The proposed consent decree provides that the defendants will pay $100,000 in civil penalties to the United States and perform a supplemental environmental project. The proposed consent decree will resolve certain claims of the United States against the defendants pursuant to an Administrative Consent Agreement and Final Order (''CAFO'') entered into on October 27, 1988, regarding a steel wall panel manufacturing plant, formerly known as the E.G. Smith plant, located at 530 North Second Street in Cambridge, Ohio.

The Department of Justice will receive, for a period of thirty (30) days from the date of this publication, comments relating to the proposed consent decree. Comments should be addressed to the Assistant Attorney General for the Environment and Natural Resources Division, Department of Justice, Washington, D.C. 20530, and should refer to *Flour City Architectural Metals, Inc., et al.,* DOJ Ref. #90–7–1–628.

The proposed consent decree may be examined at the office of the United States Attorney, Southern District of Ohio, 280 North High Street, Fourth Floor, Columbus, Ohio 43215; the Region 5 Office of the Environmental Protection Agency, 77 West Jackson Boulevard, Chicago, Illinois 60604; and at the Consent Decree Library, 1120 G Street, N.W., 4th Floor, Washington, D.C. 20005, (202) 624–0892. A copy of the proposed consent decree may be obtained in person or by mail from the Consent Decree Library, 1120 G Street, N.W., 4th Floor, Washington, D.C. 20005. In requesting a copy please refer to the referenced case and enclose a check in the amount of $6.25 (25 cents per page reproduction costs), payable to the Consent Decree Library.

Joel M. Gross,

Chief, Environmental Enforcement Section, Environmental and Natural Resources Division.

[FR Doc. 96–10213 Filed 4–24–96; 8:45 am]

BILLING CODE 4410–01–M

Notice of Lodging of Consent Order Pursuant to the Clean Water Act

Notice is hereby given that a proposed Consent Decree in *United States* v. *Leggett & Platt, Incorporated,* Civil Action No. 96–C–366, has been lodged with the United States District Court of the Eastern District of Wisconsin on April 1, 1996.

The Consent Decree resolves the claims alleged against defendant, Leggett & Platt, Incorporated (''Leggett''), under the Clean Water Act (''Act''), 33 U.S.C. 1251 *et seq.* The proposed Consent Decree provides that Leggett shall not discharge certain process waste water to a publicly owned treatment works from two of its facilities in Grafton, Wisconsin, without 30 days prior notice. The proposed decree also provides that any such discharge shall be in compliance with applicable pretreatment standards, and that Leggett shall submit reports regarding its compliance with the Consent Decree. The proposed Consent Decree also provides for the payment by Leggett of a civil penalty of $450,000 for its alleged failures to comply with federal pretreatment standards, as codified at 40 CFR Part 464, Subpart A, and with 40 CFR 403.12.

The Department of Justice will receive for a period of thirty (30) days from the date of this publication comments relating to the proposed Consent Decree. Comments should be addressed to the Assistant Attorney General of the Environment and Natural Resources Division, U.S. Department Of Justice, P.O. Box 7611, Washington, D.C. 20044, and should refer to *United States* v. Leggett & Platt, Incorporated, D.J. Ref. 90–5–1–1–5074.

The proposed Consent Decree may be examined at the office of the United States Attorney for the Eastern District of Wisconsin, 517 E. Wisconsin Ave., Milwaukee, Wisconsin 53202, at the Office of Regional Counsel, United States Environmental Protection Agency, Region V, 200 West Adams Street, Chicago, Illinois 60606, and at the Consent Decree Library, 1120 G Street, N.W., 4th Floor, Washington, D.C. 20005, (202) 624–0892. A copy of the proposed Consent Decree may also be obtained in person or by mail from the Consent Decree Library. In requesting a copy, please enclose a check in the amount of $6.00 (25 cents per page reproduction costs) payable to the ''Consent Decree Library.''

Joel Gross,

Chief, Environmental Enforcement Section, Environment and Natural Resources Division.

[FR Doc. 96–10214 Filed 4–24–96; 8:45 am]

BILLING CODE 4410–01–M

Notice of Lodging of Consent Decree Pursuant to the Comprehensive Environmental Response, Compensation, and Liability Act

Notice is hereby given that a proposed partial consent decree in *United States* v. *Torger L. Oaas, et al.,* Civil Action No. 90–75–BU–PGH (D. Montana), was lodged on March 3, 1996 with the United States District Court for the district of Montana, Butte Division. The proposed partial consent decree resolves the United States' claims for response costs at the Montana Pole and Treating Plant Superfund Site pursuant to Sections 107 and 113(g) of the comprehensive Environmental Response, Compensation, and Liability Act of 1980 (''CERCLA''), *as amended,* 42 U.S.C. 9607 and 9613(g). Under the terms of the Consent Decree, the Settling Defendants, the Atlantic Richfield Company, the Burlington Northern Railroad Company, Inland Properties, Inc., Montana Resources, Inc., and Dennis R. Washington will pay the

United States the sum of $2,700,000 in settlement of the United States' past response cost claims and $35,070,000 in future response costs incurred and to be incurred by the United States and the State of Montana for the cleanup of contaminated soils and groundwater at the Montana Pole and Treating Plant Superfund Site (the ''Site'') located near Butte, Montana. Future costs are estimated to be $35 million. The Consent Decree provides for a reopener if these costs exceed $41 million. This proposed decree also settles counter claims brought by defendants against the United States and defendants' CERCLA Section 107 and 113 claims against the Environmental Protection Agency's response action contractors, Riedel Environmental Services, Inc. and Roy F. Weston, Inc.

The Department of Justice will receive, for a period of thirty (30) days from the date of this publication, comments relating to the proposed partial consent decree. Comments should be addressed to the Assistant Attorney General for the Environment and Natural Resources Division, Department of Justice, Washington, D.C. 20530, and should refer to *United States* v. *Torger L. Oaas, et al.,* Civil Action No. 90–75–BU–PGH (D. Montana), DOJ Ref. *#90–11–2–429.* Commenters may request an opportunity for a public meeting in the affected area, in accordance with Section 7003(d) of RCRA.

The proposed consent decree may be examined at the United States Department of Justice, Environment and Natural Resources Division, Denver Field Office, 999 18th Street, North Tower Suite 945, Denver, Colorado, 80202 and at the Consent Decree Library, 1120 G Street, N.W., 4th Floor, Washington, D.C. 20005, 202–624–0892. A copy of the proposed partial consent decree may be obtained in person or by mail from the Consent Decree Library, 1120 G Street, N.W., 4th Floor, Washington, D.C. 20005. In requesting a copy, please refer to the referenced case and enclose a check in the amount of $20.50 (25 cents per page reproduction costs), payable to the Consent Decree Library. Attachments to the proposed partial consent decree can be obtained for the additional amount of $46.75.

Joel M. Gross,

Chief, Environmental Enforcement Section.

[FR Doc. 96–10267 Filed 4–24–96; 8:45 am]

BILLING CODE 4410–01–M

Notice of Lodging of Consent Decree Pursuant to the Clean Air Act

In accordance with Departmental policy, 28 CFR § 50.7, notice is hereby given that a proposed Consent Decree in *United States* versus *Island Realty, Inc.,* Civil Action No. 93–5805 (E.D.Pa.), was lodged on March 27, 1996, with the United States District Court for the Eastern District of Pennsylvania. The decree addresses Island Realty's violations of the National Emission Standard for Hazardous Air Pollutants (''NESHAP'') for asbestos that occurred at the former Celotex manufacturing plant located at 3600 Grays Ferry Avenue in Philadelphia, Pennsylvania. Island Realty violated the NESHAP by failing to wet and cover, or otherwise seal from outside air, asbestos contaminated waste; by failing to submit a plan for removal of asbestos containing materials; and by failing to remove asbestos containing materials from the facility.

Under the proposed Consent Decree, Island Realty will pay a civil penalty of $40,000, has agreed to submit a final report of its cleanup activities to EPA within 75 days of the date of entry of the Decree, and to comply with the asbestos NESHAP in the future. As to future compliance, Island Realty has agreed to detailed, specific requirements regarding the conduct of future demolition or renovation operations, site inspection, sampling and analytical protocols, and worker training. The Decree also contains provisions for Island Realty to pay stipulated penalties, ranging from $5,000 to $15,000, for any future violations of the NESHAP.

The Department of Justice will receive, for a period of thirty (30) days from the date of this publication, comments relating to the proposed Consent Decree. Comments should be addressed to the Assistant Attorney General for the Environment and Natural Resources Division, Department of Justice, Washington, D.C. 20530, and should refer to *United States* versus *Island Realty, Inc.,* DOJ Ref. #90–5–2–1–1914.

The proposed consent decree may be examined at the office of the United States Attorney, 615 Chestnut Street, Suite 1250, Philadelphia, Pennsylvania 19106–4476; the Region III Office of the Environmental Protection Agency, 841 Chestnut Building, Philadelphia, Pennsylvania 19107; and at the Consent Decree Library, 1120 G Street, N.W., 4th Floor, Washington, D.C. 20005, (202) 624–0892. A copy of the proposed consent decree may be obtained in person or by mail from the Consent Decree Library, 1120 G Street, N.W., 4th Floor, Washington, D.C. 20005. In requesting a copy please refer to the referenced case and enclose a check in the amount of $7.50 (25 cents per page reproduction costs), payable to the Consent Decree Library.

Joel M. Gross,

Section Chief, Environmental Enforcement Section, Environment and Natural Resources Division.

[FR Doc. 96–10211 Filed 4–24–96; 8:45 am]

BILLING CODE 4410–01–M

DEPARTMENT OF LABOR

Employment and Training Administration

[TA–W–31,622 and TA–W–31,623]

Hill Company, Incorporated; Fort Smith Arkansas and Charleston, Arkansas; Notice of Revised Determination on Reconsideration

On March 22, 1996, the Department issued an Affirmative Determination Regarding Application for Reconsideration for the workers and former workers of the subject firm. The notice will soon be published in the Federal Register.

Investigation findings show that the workers produced men's western shirts. The workers were denied TAA because the ''contributed importantly'' test of the Group Eligibility Requirements of the Trade Act was not met. This test is generally determined through a survey of the workers' firm's major declining customers.

The Department conducted a secondary survey of Hill Company customers. New investigation findings on reconsideration shows that a secondary customer increased purchases of men's western shirts from Foreign sources by more than 100% from 1993 to 1994.

Other findings on reconsideration show that the quantity of U.S. imports of men's shirts increased annually from 1993 through 1994, and in the twelve months through September 1995 compared to 1994.

Conclusion

After careful consideration of the new facts obtained on reconsideration, it is concluded that the workers of Hill Company, Incorporated of Fort Smith and Charleston, Arkansas were adversely affected by increased imports of articles like or directly competitive with men's western shirts produced at the subject firm.

''All workers of Hill Company, Incorporated, Fort Smith, Arkansas (TA–W–31,622) and Charleston, Arkansas (TA–W–31,623) who became totally or partially separated from employment on or after October 26, 1994 are eligible to apply for

adjustment assistance under Section 223 of the Trade Act of 1974.''

Signed at Washington, D.C., this 8th day of April 1996.

Russell T. Kile,

Acting Program Manager, Policy and Reemployment Services, Office of Trade Adjustment Assistance.

[FR Doc. 96–10199 Filed 4–24–96; 8:45 am]

BILLING CODE 4510–30–M

Investigations Regarding Certifications of Eligibility To Apply for NAFTA Transitional Adjustment Assistance

Petitions for transitional adjustment assistance under the North American Free Trade Agreement-Transitional Adjustment Assistance Implementation Act (Pub. L. 103–182), hereinafter called (NAFTA–TAA), have been filed with State Governors under Section 250(a) of Subchapter D, Chapter 2, Title II, of the Trade Act of 1974, as amended, are identified in the Appendix to this Notice. Upon notice from a Governor that a NAFTA–TAA petition has been received, the Program Manager of the Office of Trade Adjustment Assistance (OTAA), Employment and Training Administration (ETA), Department of Labor (DOL), announces the filing of the petition and takes actions pursuant to paragraphs (c) and (e) of Section 250 of the Trade Act.

The purpose of the Governor's actions and the Labor Department's investigations are to determine whether the workers separated from employment of after December 8, 1993 (date of enactment of Pub. L. 103–182) are eligible to apply for NAFTA–TAA under Subchapter D of the Trade Act because of increased imports from or the shift in production to Mexico or Canada.

The petitioners or any other persons showing a substantial interest in the subject matter of the investigations may request a public hearing with the Program Manager of OTAA at the U.S. Department of Labor (DOL) in Washington, D.C. provided such request is filed in writing with the Program Manager of OTAA not later than May 6, 1996.

Also, interested persons are invited to submit written comments regarding the subject matter of the petitions to the Program Manager of OTAA at the address shown below not later than May 6, 1996.

Petitions filed with the Governors are available for inspection at the Office of the Program Manager, OTAA, ETA, DOL, Room C–4318, 200 Constitution Avenue NW., Washington, D.C. 20210.

Signed at Washington, D.C. this 16th day of April, 1996.

Russell T. Kile,

Acting Program Manager, Policy & Reemployment Services, Office of Trade Adjustment Assistance.

APPENDIX

Petitioner (union/workers/firm)	Location	Date received at Governor's office	Petition No.	Articles produced
Equitable Resources Energy Co.; Drilling and Exploration (Co.).	Buckhannon, WV	10/19/95	NAFTA–00662	Natural oil and gas.
Selmet; Golf (Wkrs)	Albany, OR	10/30/95	NAFTA–00663	Titanium golf club heads.
Koring Brothers, Inc. (Wkrs)	Long Beach, CA	10/30/95	NAFTA–00664	Netting and twine.
American Meter Company; Industrial Products Div. (IUE).	Erie, PA	10/30/95	NAFTA–00665	Regulator assembly for gas meters.
Scentique Boudoir Accessories Inc. (Co.)	Carbondale, PA	10/31/95	NAFTA–00666	Lingerie and accessories.
Diesel Recon Company (Co.)	Sante Fe Springs, CA.	10/31/95	NAFTA–00667	Remanufacturing of diesel engines (Cummins).
Christian Fashions; (formerly Montana Fashions) (Co.).	El Paso, TX	11/01/95	NAFTA–00668	Denim jeans and assorted denim clothing.
Kellogg Company; San Leandro (AFGM)	San Leandro, CA	11/01/95	NAFTA–00669	Ready to eat cereal.
Bausch and Lomb; Personal Products Div. (Wkrs).	Rochester, NY	11/01/95	NAFTA–00670	Personal dental accessories.
Aquatech Inc.; Greenwod/East-West (LMO).	El Paso, TX	11/02/95	NAFTA–00671	Jeans and assorted denim products.
Western Reserve Products; Visador Div	Jasper, TX	11/02/95	NAFTA–00672	Decorative glass products.
Hydra-Co Enterprises Inc. (Wkrs)	Syracuse, NY	11/06/95	NAFTA–00673	Electricity.
Wondermaid Inc.; Wondermaid and De La Rose (UNITE).	Washington, MO	11/06/95	NAFTA–00674	Women's daywear and undergarments.
M.J. Electric Inc.; Industrial (IBEW)	Iron Mt., MI	11/06/95	NAFTA–00675	Electricity.
Greenfield Research Inc.; Howe Plant (Wkrs).	Howe, IN	11/08/95	NAFTA–00676	Automotive seat covers.
Triangle Wire & Cable (IBEW)	Glen Dale, WV	11/08/95	NAFTA–00677	Steel conduit and strip steel.
Sons Transportation Wkrs)	Springfield, MA	11/09/95	NAFTA–00678	Trucking of styrene manomer.
Cal-Style Furniture Mfg. Co. (Co.)	Compton, CA	11/09/95	NAFTA–00679	Dinette sets.
Inland Steel Company; Industrial Products Plate Div. (USA).	East Chicago, IL	11/09/95	NAFTA–00680	Steel products ie. alloy plates.
Albemarle Spinning Mills; Martin Mills (Wkrs).	Albemarle, NC	11/12/95	NAFTA–00681	Yarn and fabrics.
Details by Patricia Green (Wkrs)	Portland, OR	11/13/95	NAFTA–00682	Women's fashion belts.
VF Corporation; Lee Apparel (UFCW)	St. Joseph, MO	11/12/95	NAFTA–00683	Jeans and related denim items.
Mead Products; Salem (UPIU)	Salem, OR	11/15/95	NAFTA–00684	Trimmer machines, envelope machines, etc.
Rad Woodwork Co. Inc. (UWA)	Nescopeck, PA	11/15/95	NAFTA–00685	Laminated floors and butcher-block furniture.
Colgate Palmolive Co.; Liquids and Powdered Detergents (CWU).	Clarksville, IN	11/16/95	NAFTA–00686	Dishwashing liquids and powdered detergents.
American Knitting Mills of Miami, Inc. (Wkrs).	Opa Locka, FL	11/16/95	NAFTA–00687	Children's sweaters.
Becton Dickinson; Acute Care (Wkrs)	El Paso, TX	11/20/95	NAFTA–00688	Medical devices and surgical gloves.

APPENDIX—Continued

Petitioner (union/workers/firm)	Location	Date received at Governor's office	Petition No.	Articles produced
Brookshire Group (USA)	McCordsville, IN	11/20/95	NAFTA–00689	Fans and blowerwheels.
Carpenter Manufacturing (UAW)	Mitchell, IN	11/20/95	NAFTA–00690	Bus bodies.
Newsday; New York Newsday (GCIU)	Melville, NY	11/20/95	NAFTA–00691	Newsprint.
Southern Apparel Co.; Blue (Co.)	Robertsonville, NC	11/20/95	NAFTA–00692	Western jeans.
Wrangler (Wkrs)	Lonoke, AR	11/20/95	NAFTA–00693	Jeans.
Flour Daniel Inc.; NPOSR (Wkrs)	Casper, WY	11/21/95	NAFTA–00694	Crude oil and natural gas.
Colebrook Terry Inc.; York and Colebrook Plants (UNITE).	Colebrook, PA	11/21/95	NAFTA–00695	Ladies lingerie.
Intercontinental Branded Apparel (UNITE)	Hialeadh, FL	11/21/95	NAFTA–00696	Men's suits.
Boise Cascade Timber and Wood Products; Northeast Oregon Region (LU 2821).	Le Grande, OR	11/22/95	NAFTA–00697	Timber.
Johnson Controls; SSD (LOCAL 433)	Lexington, KY	11/27/95	NAFTA–00698	Dampers.
McAllen Separation Company (Wkrs)	Charlotte, NC	11/27/95	NAFTA–00699	Shirt collars.
Robertshaw Controls Co.; Grayson Controls Div. (Co.).	Long Beach, CA	11/27/95	NAFTA–00700	Gas controls valves.
Matsushita Electric Company of America; Matsushita Logistics Company (Wkrs).	Ft. Worth, TX	11/27/95	NAFTA–00701	Color television and microwave ovens.
Country Maid Sportswear Inc.; (two locations) (Wkrs).	Danville, PA	11/27/95	NAFTA–00702	Children's wear for girls.
York International; Miller Picking (USWA)	Johnstown, PA	11/27/95	NAFTA–00703	HVAC equipment.
AT&T Miocroelectronics; Opoelectronics (IBEW).	Clark, NJ	11/27/95	NAFTA–00704	Under-water communication repeaters.
American Standard; Plumbing and Fittings (USWA).	Paintsville, KY	11/28/95	NAFTA–00705	Plumbing and fitting products.
Oxford Industries; (two locations) (Co.)	Atlanta, GA	11/28/95	NAFTA–00706	Shirts.
SEA Enterprises (Co.)	Kent, WA	11/30/95	NAFTA–00707	Manufacturer coupons.
Tri-Con; Tokyo Seat (AFLCIO)	Cape Girardeau, MO.	12/04/96	NAFTA–00708	Automotive seat covers.
Ellingson Lumber Co.; Burnt River Div. (Wkrs).	Baker City, OR	12/04/95	NAFTA–00709	Lumber.
Rome Mfg. Co. (Co.)	Rome, GA	12/05/95	NAFTA–00710	Men's pants.
Sara Lee Knit Products (Co.)	Eastman, GA	12/04/95	NAFTA–00711	T-shirts.
Alcoa Fujikura LTD.; Circuit Assembly (Wkrs).	El Paso, TX	12/05/95	NAFTA–00712	Circuits.
Southwestern Cutting Service (Wkrs)	El Paso, TX	12/05/95	NAFTA–00713	Cutting of textiles.
Allied Signal Equipment Systems (Wkrs)	Eatontown, NJ	10/27/95	NAFTA–00714	Printed circuit boards.
Marshall Electronic Corp.; Rochester Plant (Co.).	Rochester, IN	11/30/95	NAFTA–00715	Output transformers.
Crown Cork and Seal Co. Inc.; Plant 1 (IAM & AW).	Philadelphia, PA	12/08/95	NAFTA–00716	Steel food cans.
Port Gamble Country Store (Co.)	Port Gamble, WA	12/08/95	NAFTA–00717	Retail store.
Paxport Mills Inc. (Co.)	Tacoma, WA	12/08/95	NAFTA–00718	Red cedar fencing.
American Hardwoods Inc.; Brands Corp. (Wkrs).	Tualatin, OR	12/11/95	NAFTA–00719	Softwood lumber.
Newell Window Furnishings; Joanna Window Decor (UPIU).	Freeport, IL	12/11/95	NAFTA–00720	Rollers and shades.
R.D. Simpson (Wkrs)	Cartersville, GA	12/13/95	NAFTA–00721	Denim jeans and shorts.
Wheelabrator; Air Polution Control (Wkrs)	Pittsburgh, PA	12/13/95	NAFTA–00722	Standard air pollution control products.
Turner and Seymour Mfg. Co. (Wkrs)	Bonners Ferry, ID	12/13/95	NAFTA–00723	Welded chain.
Gould-Shawmut; Circuit Protection (IBEW)	Newburyport, MA	12/14/95	NAFTA–00724	Circuit protection devices.
H.H. Cutler; VF Corporation (Co.)	Grand Rapids, MI	12/18/95	NAFTA–00725	T-shirts and sweatshirts.
EIS Brake Parts; Standard Motor Products Inc. (Wkrs).	Rural Retreat, VA	12/15/95	NAFTA–00726	Automobile brake products.
Dressing for Two (Wkrs)	New York City, NY	12/18/95	NAFTA–00727	Women's sportswear and apparel.
Karl J. Marx (Wkrs)	New York, NY	12/18/95	NAFTA–00728	Family clothing and housewares.
Rexam DSI Inc.; d/b/a Shore Reboul (LOCAL 132).	Freeport, NY	12/18/95	NAFTA–00729	Plastic molded cosmetic cases.
Decor Home Fashions (LOCAL 132)	Brooklyn, NY	12/18/95	NAFTA–00730	Plastic housewares.
Rockwell Int.; Semiconductor Systems (Wkrs).	El Paso, TX	01/03/96	NAFTA–00731	Telecommunications circuit boards.
Cutting Services (Wkrs)	El Paso, TX	01/03/96	NAFTA–00732	Denim.
Final Finish (Co.)	El Paso, TX	12/28/95	NAFTA–00733	Denim apparel.
Amistad Beef Company LD (Co.)	Eagle Pass, TX	12/18/95	NAFTA–00734	Beef and Beef by-products.
Synergy Services Inc.; Greenwood Mills (Wkrs).	El Paso, TX	01/03/96	NAFTA–00735	Machinery maintenance.
Siemen's Energy and Automation Inc.; Residential Products Div. (Wkrs).	El Paso, TX	12/19/95	NAFTA–00736	Residential main circuit breakers.
Anchor Glass Container Corp. (GMPPAW)	Cliffwood, NJ	01/16/96	NAFTA–00737	Glass bottles.

APPENDIX—Continued

Petitioner (union/workers/firm)	Location	Date received at Governor's office	Petition No.	Articles produced
Capri Lighting; Thomas Industries (IBEW)	Los Angeles, CA	01/16/96	NAFTA–00738	Household lighting equipment.
Miller Brewing Co. (UAW)	Milwaukee, WI	12/21/95	NAFTA–00739	Beer.
Tailor Tech (Wkrs)	Catawissa, PA	12/15/95	NAFTA–00740	Children's and ladies clothing.
W.B. Thompson Co., Inc. (Wkrs)	Iron Mountain, MI	12/20/95	NAFTA–00741	Mining products and supplies.
Lewistown Specialty Yarns Inc. (UNITE)	Lewistown, PA	12/27/95	NAFTA–00742	Polyester yarn.
Major League Inc. (Co.)	Jasper, GA	12/28/95	NAFTA–00743	Sportswear.
Capin Mercantile Corp. (Wkrs)	Nogales, AZ	12/18/95	NAFTA–00744	Warehousing of retail items.
La-Del Mfg. Co., Inc. (Wkrs)	Lawrenceburg, TN	01/16/96	NAFTA–00745	Ladies sportswear.
McCulloch Corp. (Co.)	Lake Havasu City, AZ.	01/06/96	NAFTA–00746	Lawn and garden equipment.
Shaneco Mfg., Inc. (Wkrs)	El Paso, TX	01/02/96	NAFTA–00747	Children's clothing and accessories.
Niagara Falls Business Forms (Wkrs)	Niagara Falls, NY	01/11/96	NAFTA–00748	Business forms.
G.N. Nettest; Laser Precision Division (Wkrs).	Utica, NY	01/12/96	NAFTA–00749	Circuit boards.
Equitable Resources Energy Co.; Union Drilling (Co.).	Buckhannon, WV	01/10/96	NAFTA–00750	Natural gas.
Milliken & Co.; Barnwell Plant (Wkrs)	Barnwell, SC	01/15/96	NAFTA–00751	Fabric and yarn.
LaSevilla Fashions Inc.; Mangham Plant (Co.).	Mangham, LA	01/12/96	NAFTA–00752	Men's pants.
Rhone-Poulenc Inc.; Newark Plant (Wkrs)	Newark, NJ	12/28/95	NAFTA–00753	Defoamers and textile chemicals.
Tultex Corp.; Marion Plant (Wkrs)	Marion, NC	1/16/96	NAFTA–00754	Knit clothing i.e. sweatshirts and sweatpants.
Omak Wood Products Inc. (WCIW)	Omak, WA	1/3/96	NAFTA–00755	Lumber.
Smithkline Beecham; Consumer Healthcare (Co.).	Clifton, NJ	12/27/95	NAFTA–00756	Emulsion.
U.S. Enertek (Wkrs)	Farmington, NM	12/21/95	NAFTA–00757	Production equipment for oil and natural gas fields.
American National Can (USA)	St. Louis, MO	12/28/95	NAFTA–00758	Beverage cans.
Rockmart Apparel; Niki Inc. (Wkrs)	Rockmart, GA	1/3/96	NAFTA–00759	Women's jeans and uniforms.
General Mills Inc.; Marketing (Wkrs)	Golden Valley, MN	1/8/96	NAFTA–00760	Coupons.
Adrian Mfg. Inc. (Co.)	El Paso, TX	1/11/96	NAFTA–00761	Children's clothing.
Stitches (Wkrs)	El Paso, TX	1/17/96	NAFTA–00762	Garments.
Everest and Jennings; Earth City Mfg. (IAMAW).	Earth City, MO	1/17/96	NAFTA–00763	Wheelchairs.
Emerson Electric; EMD (Wkrs)	Kennett, MO	1/17/96	NAFTA–00764	Electric motors.
L.E. Matchett Trucking (TEAMSTERS)	Veradala, WA	1/17/96	NAFTA–00765	Trucking related services.
James River Corp.; Coated Products (AWPPW).	Portland, OR	12/29/95	NAFTA–00766	Frozen food packaging film.
Energy Fuels Nuclear Inc.; White Mesa Mill (Co.).	Blanding, UT	1/17/96	NAFTA–00767	Uranium oxide.
National Supermarkets Inc.; Loblaw Companies Limited (UFCW).	St. Louis, MO	1/18/96	NAFTA–00768	Groceries.
Wrangler Inc.; Silverlake Fashion Unit (LMO).	El Paso, TX	1/16/96	NAFTA–00769	Jeans and denim products.
Anchor Glass Container Corp.; Plant 18 (GMPPAWIU).	Houston, TX	1/22/96	NAFTA–00770	Glass containers.
Farr Company (Wkrs)	West Hazelton, PA	1/23/96	NAFTA–00771	HVAC filters.
F.G. Montabert Inc. (UFCS)	Midland Park, NJ	12/16/95	NAFTA–00772	Woven textle labels.
Globe Building Materials Inc.; Chester Plant (Wkrs).	Chester, WV	1/16/96	NAFTA–00773	Shingles.
UCAR Carbon Co. Inc. (IUOE)	Columbia, TN	1/22/96	NAFTA–00774	Graphite electrodes.
New River Furniture Industry Inc. (Wkrs)	Galax, VA	1/23/96	NAFTA–00775	Upholstered livingroom furniture.
Ca Ce Len Mfg. Inc. (Co.)	Granger, TX	01/23/96	NAFTA–00776	Clothing.
Eagle Pitcher; Construction Equipment Systems (LOCAL 826).	Lubbock, TX	1/17/96	NAFTA–00777	Caterpillar equipment.
MBCA Mfg. Inc. (Co.)	El Paso, TX	1/23/96	NAFTA–00778	T-Shirts.
Rio Algom Mining Corp.; Bill Smith Project (Wkrs).	Douglas, WY	1/23/96	NAFTA–00779	Uranium.
Pacificorp; Centralia Mining Co. (AFL–CIO).	Centralia, WA	1/24/96	NAFTA–00780	Electrical energy.
Bass Mfg. Co. Inc. (Wkrs)	Camden, TN	1/22/96	NAFTA–00781	Ladies tops.
Trinova Corp.; Aeroquip—Henderson (Wkrs).	Henderson, KY	1/25/96	NAFTA–00782	Aeronautical equipment.
ACCO USA; Wilson Jones Div. (IBT)	Hinsdale, IL	1/23/96	NAFTA–00783	Printed paper office products.
Standard Textile Contractors Inc. (Co.)	Knoxville, TN	1/23/96	NAFTA–00784	Golf shirts.
Burlington Industries (Wkrs)	New York City, NY	1/24/96	NAFTA–00785	Wool fabric (sales and administration).
Central Penn Sewing Machine Co. Inc. (Wkrs).	Bloomsburg, PA	1/25/96	NAFTA–00786	Industrial sewing machines and parts.

APPENDIX—Continued

Petitioner (union/workers/firm)	Location	Date received at Governor's office	Petition No.	Articles produced
MK Rail Corp.; Mountaintop Locomotive Div. (Wkrs).	Mountaintop, PA	1/25/96	NAFTA–00787	Locomotives.
Imperial Metal and Chemical Co. (USA)	Philadelphia, PA	1/25/96	NAFTA–00788	Aluminum printing plates.
Takata Seat Belts Inc. (Wkrs)	Douglas, AZ	1/26/96	NAFTA–00789	Seat belts.
WTD Corp.; Morton Forest Products (WCIW).	Morton, WA	1/26/96	NAFTA–00790	Lumber.
Spartan Printing (GUIU)	Walsh, IL	1/26/96	NAFTA–00791	Printed magazines and periodicals.
Boise Cascade Corp. (UBCJOA)	Yakima, WA	12/18/95	NAFTA–00792	Lumber.
W.F. Stephens Mfg. Co. Inc. (Co.)	Pulaski, TN	1/26/96	NAFTA–00793	Denim jeans.
Mike's Blocks (Wkrs)	Forks, WA	1/29/96	NAFTA–00794	Cedar shakes and shingles.
Christian Bros. Logging, Inc. (Co.)	Cascade, ID	1/29/96	NAFTA–00795	Timber.
Pent-House Sales Corp. (Wkrs)	Franklin, MA	1/29/96	NAFTA–00796	Ladies belts and accessories.
Philips Consumer Electronics Co. (IUE)	Arden, NC	1/30/96	NAFTA–00797	Plastic television cabinents.
Proform Products USA Inc. (Wkrs)	Everson, WA	1/09/96	NAFTA–00798	Automobile hardtops.
Warnaco; Warner's Div. (Wkrs)	Sylvania, GA	02/02/96	NAFTA–00799	Intimate apparel.
National Metal Products (IWIL)	Bensenville, IL	01/31/96	NAFTA–00800	Railroad friction products (locomotive shoes) and automotive stampings.
Takata Seat Belts Inc.; Gateway Safety Systems (Wkrs).	Del Rio, TX	01/31/96	NAFTA–00801	Safety restraint components.
Mallinckrodt Anesthesiology Div. (Wkrs)	Earth City, MO	02/01/96	NAFTA–00802	Medical devices.
Union Special Corp. (Wkrs)	Huntley, IL	01/31/96	NAFTA–00803	Industrial sewing machines.
Imperial Wallcoverings, Inc.; A Collins and Aikman Company (UPIU).	Hammond, IN	02/02/96	NAFTA–00804	Wallpaper and borders.
PMI Food Equipment Group; Plants 11 & 12 (UAW).	Troy, OH	02/02/96	NAFTA–00805	Commercial dishwashers.
Blue Mesa Forest Products Inc. (Wkrs)	Montrose, CO	01/31/96	NAFTA–00806	Lumber.
Inland Container Corp.; A Temple Inland Co. (UPIU).	Macon, GA	02/06/96	NAFTA–00807	Containers.
Quality Stitching Inc. (Wkrs)	Saluda, SC	02/05/96	NAFTA–00808	Boxer shorts, and ladies tops and pants.
Textile Networks Inc. (Co.)	Knoxville, TN	02/05/96	NAFTA–00809	Tee shirts.
Pope and Talbot Inc.; Eau Claire Plant (UPIC).	Eau Claire, WI	02/05/96	NAFTA–00810	Diapers.
St. Mary's Sewing Ind. (Wkrs)	Edcouch, TX	02/06/96	NAFTA–00811	Pants.
Quality Aluminum Casting Co. (UAW)	Waukesha, WI	02/07/96	NAFTA–00812	Aluminum foundry castings.
Wirekraft Industries Inc.; Burcliff Div. (Co.)	Franklin, NC	02/07/96	NAFTA–00813	Wiring harnesses.
Howard Mfg. Co.; Howard Ladder (WCIW)	Kent, WA	02/07/96	NAFTA–00814	Ladders.
Smith's Home Furnishings; Bellingham Store (Wkrs).	Bellingham, WA	02/07/96	NAFTA–00815	Household appliances.
Horseshoe Bar Ranch (Co.)	Ola, ID	02/07/96	NAFTA–00816	Beef cattle and grain.
Alphabet; Div. of Stoneridge Inc. (Co.)	Nappanee, IN	02/09/96	NAFTA–00817	Wire harnesses.
Medical Textiles Inc. (Wkrs)	South Boston, VA	02/07/96	NAFTA–00818	Back support belts.
Thomas and Betts Corp. (Co.)	Montgomeryville, PA.	02/09/96	NAFTA–00819	Electrical components.
Capitol Mercury Shirt Corp.; (8 Divs.) (Co.)	Des Arc, AR	02/11/96	NAFTA–00820	Men's sport and dress shirts.
Masland Industries; Masland-Lewistown (UNITE).	Lewistown, PA	02/12/96	NAFTA–00821	Automotive interior trim products.
Wutson Agency Inc. (Wkrs)	Coeur d'Alene, ID	02/13/96	NAFTA–00822	Personal agency.
Wocto Inc. (BAOIW)	Mills, WY	02/13/96	NAFTA–00824	Truck bodies.
TRW, Inc.; AEG (ICWU)	Union Springs, NY	02/12/96	NAFTA–00825	Switches.
Textron Inc.; Textron Lycoming Div. (UAW)	Williamsport, PA	02/09/96	NAFTA–00826	Aircraft parts and engines.
Parsons Textile (Co.)	Arizona City, AZ	02/12/96	NAFTA–00827	T-shirts.
Raintree, Buckles and Jewelry Inc. (Wkrs)	North Hollywood, CA.	02/14/96	NAFTA–00828	Accessories.
U.S. JVC Corp.; JVC Mfg. Co. (Wkrs)	Elmwood Park, NJ	02/14/96	NAFTA–00829	Television sets.
C.R. Bard Inc.; Urological Div. (Co.)	Nogales, AZ	02/15/96	NAFTA–00830	Catheters.
Hines Oregon Millwork Enterprises (Co.)	Hines, OR	02/13/96	NAFTA–00831	Wood Blocks, and blanks.
Elf Atochem North America; Flourochemical (IAMAWB.	Calvert City, KY	02/16/96	NAFTA–00832	Hydroflouric acid.
Mission Packaging Inc. (Wkrs)	Tigard, OR	02/12/96	NAFTA–00833	Bottles.
SCT Yarns Inc.; Cherryville Plant (Wkrs)	Cherryville, NC	02/16/96	NAFTA–00834	Textile yarn.
Converse Inc. (Co.)	Lumberton, NC	02/16/96	NAFTA–00835	Sports shoes.
Square D Co. (IBEW)	Lexington, KY	02/16/96	NAFTA–00836	Electrical load centers.
Blue Chip Products, Inc. (Wkrs)	Morrisville, PA	02/20/96	NAFTA–00837	Automative alternators, water pumps and clutches.
Winona Knitting Mills; Berwick Knitwear (Co.).	Berwick, PA	02/29/96	NAFTA–00838	Sweaters.
Whisper Woods; A Division of Jessup Door Co. (Co.).	Redmond, OR	02/16/96	NAFTA–00839	Veneer and laminated rails for the door industry.
Hill Company Inc. (Co.)	Ft. Smith, AR	02/20/96	NAFTA–00840	Western shirts.

APPENDIX—Continued

Petitioner (union/workers/firm)	Location	Date received at Governor's office	Petition No.	Articles produced
Cascade Timber Co. Inc.; Logging Div. (Wkrs).	Klamath Falls, OR	02/19/96	NAFTA–00841	Logs and chips.
Krone Inc. (Co.)	Englewood, CO	02/20/96	NAFTA–00842	Telecommunication products.
General Electric Co.; Residential Transformer (IUE).	Hickory, NC	02/21/96	NAFTA–00843	Transformers.
Bike Atheltic Co. (Co.)	Cherryville, NC	02/22/96	NAFTA–00844	Atheltic shorts and jerseys.
General Electric Co.; Bucyrus Lamp Plant (IUE).	Bucyrus, OH	02/22/96	NAFTA–00846	Flourescent lamps.
Daniel Greene Co. (Wkrs)	Dolgeville, NY	02/21/96	NAFTA–00847	Casual footwear.
American Electric Power; Ohio Power Co. Cardinal Plant (UWUOA).	Brilliant, OH	02/23/96	NAFTA–00850	Electricity.
Alps Electric USA, Inc.; Alps Manufacturing (Wkrs).	Garden Grove, CA	02/26/96	NAFTA–00851	Computer peripheral device.
Simpson Paper Company (AWPWW)	West Linn, OR	02/23/96	NAFTA–00852	General purpose paper for printing.
Dutchess Lingerie; dba Sylvester Textile (Wkrs).	Sylvester, GA	02/26/96	NAFTA–00853	Intimate apparel.
United Technologies Automotive; Interior Systems Division (SMWU).	Morganfield, KY	02/25/96	NAFTA–00854	Interior plastic consoles for automotive parts.
Harvard Industries; Harman Automotive (Co.).	Sevierville, TN	02/26/96	NAFTA–00855	Power packs and remote control assemblies.
Oneita Industries; Andrews Sewing Plant (Co.).	Andrews, SC	02/26/96	NAFTA–00856	Fleece garments.
Decaturville Manufacturing (Wkrs)	Decaturville, TN	02/26/96	NAFTA–00857	Jeans and bottoms.
United Technologies Automotive; Wiring Systems Division (Co.).	Bennettsville, SC	02/26/96	NAFTA–00858	Electrical wiring harnesses.
Eaton Corp.; Forge Div. (BOILERMAKE)	Marion, OH	02/21/96	NAFTA–00859	Truck axles.
Branson Ultrasonic Corp.; Precision Cleaning Company (Co.).	Paramount, CA	02/26/96	NAFTA–00860	Ultrasonic cleaning equipment.
Cleo de Mexico (Wkrs)	McAllen, TX	02/27/96	NAFTA–00861	Holiday decorations and wrapping accessories.
American Banknote Company (GCIU)	Bedford Park, IL	02/28/96	NAFTA–00864	Printed value documents such as postage stamps, food stamp coupons and some foreign currency.
Alliant Techsystems, Inc.; Accudyne Operations (Wkrs).	Janesville, WI	02/29/96	NAFTA–00866	Projectile fuses (50%), mine systems (30%) and reserve energy batteries (20%).
Neles-Jamesbury Inc. (Wkrs)	Glen Falls, NY	03/01/96	NAFTA–00867	Industrial valves.
Johnson Controls Battery Group, Inc. (UAW).	Louisville, KY	03/04/96	NAFTA–00869	Automotive batteries.
Ostrander Resources Company; DBA Fremont Sawmill (Co.).	Lakeview, OR	03/01/96	NAFTA–00870	Kiln-dried rough and surfaced lumber.
GEN/RX, Incorporated; (A.K.A. Apotex) (Wkrs).	Fort Collins, CO	02/27/96	NAFTA–00873	Veterinary pharmaceuticals.
Freedom Institute of EL Paso (Wkrs)	El Paso, TX	03/05/96	NAFTA–00875	Doctor's office specializing in neurometric testing.
Stokely USA, Inc. (TEAMSTERS)	Grandview, WA	03/05/96	NAFTA–00879	Frozen vegetables.
James River Corp.; Packaging Business (UPIU).	Wausau, WI	03/07/96	NAFTA–00885	Printed paper products.
Cole Haan; Cole Haan Manufacturing Division (Co.).	Lewiston, ME	03/13/96	NAFTA–00891	Moccasin footwear.
Pam-Cor (Co.)	Portland, OR	03/14/96	NAFTA–00907	Air Craft Parts.
UGG Holding, Inc. (Co.)	Carpinteria, CA	03/13/96	NAFTA–00908	Sheepskin Footwear.
Zenith Electronics; Cable Division (Wkrs)	El Paso, TX	03/18/96	NAFTA–00909	TV Cable Boxes.
Syracuse Lithographing Company (Wkrs)	Syracuse, NY	03/15/96	NAFTA–00910	Printed material.
Mayr Brothers Company (Co.)	Hoquiam, WA	03/18/96	NAFTA–00911	Finished Wood Products.
Van's Tennis Shoe Company; Stitching Production Dept. (Wkrs).	Orange, CA	03/18/96	NAFTA–00912	Stitching products.
Tx Mx Sportwear International (Co.)	El Paso, TX	03/19/96	NAFTA–00913	Shorts, skirts & jeans products.
Terminal Fabrication, Inc. (Co.)	Freeport, IL	03/15/96	NAFTA–00914	Fabrics.
Shirts Elite Inc.; Troy shirtmakers (Co.)	Glens Falls, NY	03/11/96	NAFTA–00915	Woven sport shirts.
HIS (Wkrs)	Clinton, KY	03/21/96	NAFTA–00916	Jeans and Shorts.
SPX Corporation; Kent-Moore (Wkrs)	Jackson, MI	03/07/96	NAFTA–00917	Special service tools.
Permian Basin Community Centers; Country Mesa (Wkrs).	Midland, TX	03/21/96	NAFTA–00918	Community Center.
Flexitallic Gasket Company (Co.)	Pennsauken, NJ	03/18/96	NAFTA–00919	Temperature gaskets.
NCR Corp.; Systemedia Division (Wkrs)	Viroqua, WI	03/21/96	NAFTA–00920	Custom forms and labels.
General Electric (Wkrs)	Louisville, KY	03/22/96	NAFTA–00921	Electric Appliances.
Western Publishing (Wkrs)	Racino, WI	03/22/96	NAFTA–00922	Books, Printed Materials.

APPENDIX—Continued

Petitioner (union/workers/firm)	Location	Date received at Governor's office	Petition No.	Articles produced
Weyerhaeuser Western Lumber; Kamiah Operations (Wkrs).	Tacoma, WA	03/21/96	NAFTA–00923	Lumber.
Bugle Boy Industries, Inc (Wkrs)	Little Rock, AR	03/22/96	NAFTA–00924	Clothing.
Caraway Mfg Corp (Wkrs)	Caraway, AR	03/22/96	NAFTA–00925	Women's dress and other apparel.
Plaid Holding Corporation; Palm Beach Company (Wkrs).	Knoxville, TN	03/25/96	NAFTA–00926	Men's suits.
Ogden—Atlantic Design (Wkrs)	Pough, NY	03/21/96	NAFTA–00927	Assemble of printed circuit boards.
United Technologies Automotive; Wiring Systems (Co.).	Plymouth, IN	03/25/96	NAFTA–00928	Automobile Wiring harnesses.
Ato Chem; Buffalo Plant (OCAW) (OCAW)	New York, NY	03/26/96	NAFTA–00929	Alperox deconox.
Bend Wood Products (Wkrs)	Bend, OR	03/26/96	NAFTA–00930	Secondary Wood Products.
Casablanca Fan Company (Co.)	City of Industry, CA	03/25/96	NAFTA–00931	Ceiling Fans.
Timber Products; Grove Lumber (Wkrs)	S. Eugene, OR	03/25/96	NAFTA–00932	Dimensional Lumber.
Cambridge Research Group; Shopware (Wkrs).	Aberdeen, WA	03/25/96	NAFTA–00933	Computer software.
Vanity Fair Mills (Wkrs)	McAllen, TX	03/27/96	NAFTA–00934	Fabric and Lace.
The Majestic Products Company (Wkrs)	Austin, TX	03/27/96	NAFTA–00935	Fireplace and accessories.
Advance Transformer Co. (Co.)	Platteville, WI	03/27/96	NAFTA–00936	Electronic and Magnetic lighting ballasts.
Eagle Garment (Wkrs)	, TX	03/27/96	NAFTA–00937	Clothing.
Berkley Medical Resources; Face Mask Division (UNITE).	Uniontown, PA	03/27/96	NAFTA–00938	Medical Facial Masks.
Thermo-Disc, Inc. (IAMAW)	, IN	03/28/96	NAFTA–00939	Thermoplastic molded parts.
Osram Sylvania; Lamp Manufacturing—St. Mary Plant (Wkrs).	St. Marys, PA	03/28/96	NAFTA–00940	Incandescent lightbulbs.
International paper Co. (IAM)	Reedsport, OR	03/29/96	NAFTA–00941	Logs for wood products.
Centry Pine (Co.)	Redmond, OR	03/29/96	NAFTA–00942	Pine.
J.C. Decker Co., Inc. (Wkrs)	Montgomery, PA	04/01/96	NAFTA–00943	Pet supplies and small leather good.
Data Products Corporation; Imaging Supplies Division (Wkrs).	Norcross, GA	04/01/96	NAFTA–00944	Computer Ribbon Products.
Montana Power Company; Colstrip Project Division (Wkrs).	Colstrip, MT	04/01/96	NAFTA–00946	Electricity.
Salem Screensouth Apparel Printers of Am; Fruit of the Loom, Inc. (Wkrs).	Florence, AL	04/01/96	NAFTA–00947	Tee Shirts and Sweat Shirt Screen Printing.
Irvin Automotive (Wkrs)	DelRio, TX	03/18/96	NAFTA–00948	Automotive Parts.
Salvatrice Shoe, Inc. (Co.)	Blackshear, GA	04/02/96	NAFTA–00949	Women's Sport Casual Shoes.
Mid Columbia Lumber and Box Co., Inc. (Co.).	Madras, OR	04/05/96	NAFTA–00950	FJ Blocks and Cutstocks.
Clear Pine Molding (Wkrs)	Primeville, OR	04/05/96	NAFTA–00951	Pine Molding.
I. Appel (Wkrs)	Henderson, TN	04/01/96	NAFTA–00952	Robes, Sleepwear, Lingerie.
L. Chessler, Inc. (UNITE)	Philadelphia, PA	04/03/96	NAFTA–00953	Belts.
Progressive Knitting Mills of Pennsylvan (UNITE).	Philadelphia, PA	04/02/96	NAFTA–00954	Bathing Suits.
Puchis Fashion Centers (Wkrs)	Tuson, AZ	04/02/96	NAFTA–00955	Apparel and Shoes.
Lindal Cedar Home, Inc. ( )	Seattle, WA	03/15/96	NAFTA–00956	Custom Home Material Packages.
Cargill, Inc.; Cargill Steel and Wire (Wkrs)	Beaumont, TX	04/03/96	NAFTA–00957	Steel Wire.
Foxspoint Sportswear (UNITE)	Ironwood, MI	03/31/96	NAFTA–00958	Hunting and Snowmobile Apparel and Children and Fleece.
Newell Home Hardware Companies; Dorfile Storage and Shelving Systems (Wkrs).	City of Commerce, CA.	04/04/96	NAFTA–00959	Aluminum and steel brackets, clips and rods made by computerized and non-computerized machines.
Layne, Inc. (Wkrs)	Clarks Summit, PA	04/05/96	NAFTA–00960	AWJ, BWJ, NWJ, Rods, Diamond Bits.

[FR Doc. 96–10198 Filed 4–24–96; 8:45 am]

BILLING CODE 4510–30–M

[TA–W–32,116]

Galey & Lord Society Hill, South Carolina; Notice of Termination of Investigation

Pursuant to Section 221 of the Trade Act of 1974, an investigation was initiated on April 1, 1996 in response to a worker petition which was filed on behalf of workers and former workers at Galey & Lord, located in Society Hill, South Carolina (TA–W–32,116).

The Department of Labor has not been able to verify the information provided on the petition with a contact person at the subject firm. Consequently, the Department of Labor cannot conduct an investigation to make a determination as to whether the workers are eligible for adjustment assistance benefits under the Trade Act of 1974.

Therefore, further investigation in this matter would serve no purpose, and the investigation has been terminated.

Signed at Washington, DC this 3rd day of April 1996.

Russell T. Kile,

Acting Program Manager, Policy and Reemployment Services, Office of Trade Adjustment Assistance.

[FR Doc. 96–10202 Filed 4–24–96; 8:45 am]

BILLING CODE 4510–30–M

[TA–W–32,130]

Pope & Talbot, Incorporated, Port Gamble, Washington; Notice of Termination of Investigation

Pursuant to Section 221 of the Trade Act of 1974, an investigation was initiated on April 1, 1996 in response to a worker petition which was filed by the Western Council of Industrial Workers, Local Shop No. 2633, on behalf of workers and former workers at Pope & Talbot, Incorporated, located in Port Gamble, Washington (TA–W–32,130).

The investigation revealed that workers at Pope & Talbot, Incorporated, located in Port Gamble, Washington are currently covered under an existing certification (TA–W–29,852).

Consequently, further investigation in this case would serve no purpose, and the investigation has been terminated.

Signed at Washington, DC this 3rd day of April 1996.

Russell T. Kile,

Acting Program Manager, Policy and Reemployment Services; Office of Trade Adjustment Assistance.

[FR Doc. 96–10201 Filed 4–24–96; 8:45 am]

BILLING CODE 4510–30–M

Investigations Regarding Certifications of Eligibility to Apply for Worker Adjustment Assistance

Petitions have been filed with the Secretary of Labor under Section 221(a) of the Trade Act of 1974 (''the Act'') and are identified in the Appendix to this notice. Upon receipt of these petitions, the Program Manager of the Office of Trade Adjustment Assistance, Employment and Training Administration, has instituted investigations pursuant to Section 221 (a) of the Act.

The purpose of each of the investigations is to determine whether the workers are eligible to apply for adjustment assistance under Title II, Chapter 2, of the Act. The investigations will further relate, as appropriate, to the determination of the date on which total or partial separations began or threatened to begin and the subdivision of the firm involved.

The petitioners or any other persons showing a substantial interest in the subject matter of the investigations may request a public hearing, provided such request is filed in writing with the Program Manager, Office of Trade Adjustment Assistance, at the address show below, not later than May 6, 1996.

Interested persons are invited to submit written comments regarding the subject matter of the investigations to the Program Manager, Office of Trade Adjustment Assistance, at the address shown below, not later than May 6, 1996.

The petitions filed in this case are available for inspection at the Office of the Program Manager, Office of Trade Adjustment Assistance, Employment and Training Administration, U.S. Department of Labor, 200 Constitution Avenue, N.W., Washington, D.C. 20210.

Signed at Washington, D.C. this 1st day of April, 1996.

Russell Kile,

Acting Program Manager, Policy & Reemployment Services, Office of Trade Adjustment Assistance.

APPENDIX

[Petitions Instituted on 04/01/96]

TA–W	Subject firm (petitioners)	Location	Date of petition	Product(s)
32,106	ABT CO (IAM)	Alpena, MI	01/29/96	Hard Board, Paneling and Siding.
32,107	Basin Exploration Inc. (Wkrs)	Denver, CO	03/15/96	Crude Oil, Natural Gas.
32,108	Bonnell Mfg. Co. (UNITE)	Mt. Laurel, NJ	03/20/96	Ladies' Dresses and Gowns.
32,109	Branch Oil and Gas (Wkrs)	Shelby, MT	02/29/96	Natural Gas.
32,110	Cowtown Boot Co. (Comp)	El Paso, TX	02/28/96	Western Boots.
32,111	Der-Tex Corp. of PA (Comp)	East Berlin, PA	03/07/96	Shoe Components.
32,112	E.I. Dupont (Wkrs)	Deepwater, NJ	03/11/96	Chemicals.
32,113	Eagle Garment (Wkrs)	El Paso, TX	03/18/96	Stonewash Pants.
32,114	Forte Cashmere (UNITE)	Woonsocket, RI	03/16/96	Cashmere.
32,115	Foxpoint Sportswear (UNITE)	Ironwood, MI	03/13/96	Snow Suits and Childrens Garments.
32,116	Galey & Lord (Wkrs)	Society Hill, SC	03/15/96	Printing.
32,117	Hubbell Lighting, Inc. (IUE)	Christiansburg, VA	03/10/96	Industrial Lighting Fixtures.
32,118	James River Corporation (UPIU)	Wausau, WI	03/05/96	Printed Paper Cartons, Food Serving Tray.
32,119	Jasper Yarn Processing (Wkrs)	Jasper, GA	03/15/96	Dyeing and Selling Yarn.
32,120	Kellogg Company (AFGM)	Battle Creek, MI	03/20/96	Cereals.
32,121	L.A.T. Sportswear (Wkrs)	Fyffe, AL	03/12/96	T-Shirts and Rompers.
32,122	Lightolier/West (Wkrs)	Compton, CA	03/19/96	Lighting Fixtures.
32,123	Magnolia Hosiery Mill Inc (Comp)	Corinth, MS	03/06/96	Ladkies' Nylon Hosiery.
32,124	Mayr Bros. Company (Comp)	Hoquiam, WA	03/14/96	Wood Products.
32,125	NCR Corp (Wkrs)	Viroqua, WI	03/20/96	Custom Business Forms and Labels.
32,126	New Cherokee Corp (Wkrs)	Spindale, NC	02/10/96	Yarns.
32,127	Pennsylvania Power (Wkrs)	Shippingport, PA	02/23/96	Provide Electricity.
32,128	Permian Basin Comm. Cent. (Wkrs)	Midland, TX	03/15/96	Community Center.
32,129	Phillips Petroleum Co (Wkrs)	Bellaire, TX	02/07/96	Crude Oil.
32,130	Pope & Talbot (CJA)	Port Gamble, WA	03/06/96	Soft Wood Lumber.
32,131	Ranick, Ltd. (Comp)	Athens, GA	03/12/96	Men's and Ladies' Fabric House Slippers.
32,132	Ranick, Ltd. (Comp)	Washington, GA	03/12/96	Men's and Ladies' Fabric House Slippers.
32,133	Rau Fastener Company (Comp)	Providence, RI	03/19/96	Snap Fasteners for Garments.
32,134	Scotts Hill Leisurewear (UNITE)	Scotts Hill, TN	03/13/96	Ladies' Robes, Lingerie.
32,135	Siecor Corp. (Wkrs)	San Diego, CA	03/14/96	Telephone Modules.
32,136	Softwear Textiles (Wkrs)	Doniphan, MO	03/14/96	Men's and Ladies' Coats and Jackets.
32,137	Spartan Mills (Comp)	Spartanburg, SC	03/11/96	Co. Headquarters (Fabric and Yarn).
32,138	Spartan Mills, Cleveland (Comp)	Lawndale, NC	03/11/96	Fabric.
32,139	Spartan Mills, Montgomery (Comp)	Chesnee, SC	03/11/96	Fabric.
32,140	Spartan Mills, Rosemont (Comp)	Jonesville, SC	03/01/96	Fabric.

APPENDIX—Continued

[Petitions Instituted on 04/01/96]

TA–W	Subject firm (petitioners)	Location	Date of petition	Product(s)
32,141	Spartan Mills, Whitney (Comp)	Spartanburg, SC	03/11/96	Yarn.
32,142	Stephenson Enterprises (Comp)	Folkston, GA	03/19/96	Dress Pants and Shorts.
32,143	Sun Belt Fixtures, Inc (Wkrs)	El Paso, TX	03/06/96	Paint Clothes Racks.
32,144	Plastic Manufacturing Co (Wkrs)	Dallas, TX	03/22/96	Styrene Drinkware and Melamine Dinnerware.
32,145	Tampella Power Corp. (Comp)	Williamsport, PA	02/26/96	Municipal Solid Waste Boilers.
32,146	TEX–MEX Sportswear (Wkrs)	El Paso, TX	03/14/96	Ladies' and Men's Pants, Shorts.
32,147	Terminal Fabrication, Inc (Comp)	Freeport, IL	02/28/96	Terminal Blocks for HVAC Industry.
32,148	Ultima Fashions, Inc (Wkrs)	Clifton, NJ	02/02/96	Ladies' Jackets.
32,149	Vanity Fair Mills (Wkrs)	McAllen, TX	03/15/96	Bras, Panties, Girdles.
32,150	Wave Tek Corp (Wkrs)	San Diego, CA	03/15/96	Multimeters, Portable Generators.
32,151	Western Publishing Co (UAW)	Racine, WI	02/17/96	Books–Printed Material.
32,152	Weyerhaeuser Western Lum. (Wkrs)	Kamiah, ID	03/01/96	Lumber.
32,153	Zenith Electronics Corp (Wkrs)	McAllen, TX	03/20/96	Televisions.
32,154	Eastland Shoe Mfg. Corp. (Wkrs)	Freeport, ME	01/16/96	Men's, Women's and Children's Casual Shoes.

[FR Doc. 96–10200 Filed 4–24–96; 8:45 am]

BILLING CODE 4510–30–M

Pension and Welfare Benefits Administration

[Application No. D–09844, et al.]

Proposed Exemptions; Jacor Communications Inc. Retirement Plan (the Plan)

AGENCY: Pension and Welfare Benefits Administration, Labor

ACTION: Notice of proposed exemptions.

SUMMARY: This document contains notices of pendency before the Department of Labor (the Department) of proposed exemptions from certain of the prohibited transaction restrictions of the Employee Retirement Income Security Act of 1974 (the Act) and/or the Internal Revenue Code of 1986 (the Code).

Written Comments and Hearing Requests

Unless otherwise stated in the Notice of Proposed Exemption, all interested persons are invited to submit written comments, and with respect to exemptions involving the fiduciary prohibitions of section 406(b) of the Act, requests for hearing within 45 days from the date of publication of this Federal Register notice. Comments and request for a hearing should state: (1) the name, address, and telephone number of the person making the comment or request, and (2) the nature of the person's interest in the exemption and the manner in which the person would be adversely affected by the exemption. A request for a hearing must also state the issues to be addressed and include a general description of the evidence to be presented at the hearing. A request for a hearing must also state the issues to be addressed and include a general description of the evidence to be presented at the hearing.

ADDRESSES: All written comments and request for a hearing (at least three copies) should be sent to the Pension and Welfare Benefits Administration, Office of Exemption Determinations, Room N–5649, U.S. Department of Labor, 200 Constitution Avenue, N.W., Washington, D.C. 20210. Attention: Application No. stated in each Notice of Proposed Exemption. The applications for exemption and the comments received will be available for public inspection in the Public Documents Room of Pension and Welfare Benefits Administration, U.S. Department of Labor, Room N–5507, 200 Constitution Avenue, N.W., Washington, D.C. 20210.

Notice to Interested Persons

Notice of the proposed exemptions will be provided to all interested persons in the manner agreed upon by the applicant and the Department within 15 days of the date of publication in the Federal Register. Such notice shall include a copy of the notice of proposed exemption as published in the Federal Register and shall inform interested persons of their right to comment and to request a hearing (where appropriate).

SUPPLEMENTARY INFORMATION: The proposed exemptions were requested in applications filed pursuant to section 408(a) of the Act and/or section 4975(c)(2) of the Code, and in accordance with procedures set forth in 29 CFR Part 2570, Subpart B (55 FR 32836, 32847, August 10, 1990). Effective December 31, 1978, section 102 of Reorganization Plan No. 4 of 1978 (43 FR 47713, October 17, 1978) transferred the authority of the Secretary of the Treasury to issue exemptions of the type requested to the Secretary of Labor. Therefore, these notices of proposed exemption are issued solely by the Department.

The applications contain representations with regard to the proposed exemptions which are summarized below. Interested persons are referred to the applications on file with the Department for a complete statement of the facts and representations.

Jacor Communications Inc. Retirement Plan (the Plan), Located in Cincinnati, Ohio

[Application No. D–09844]

Proposed Exemption

The Department is considering granting an exemption under the authority of section 408(a) of the Act and section 4975(c)(2) of the Code and in accordance with the procedures set forth in 29 CFR Part 2570, Subpart B (55 FR 32836, 32847, August 10, 1990). If the exemption is granted, the restrictions of sections 406(a), 406(b)(1) and (b)(2) and 407(a) of the Act and the sanctions resulting from the application of section 4975 of the Code, by reason of section 4975(c)(1) (A) through (E) of the Code shall not apply to (1) the past receipt by the Plan of certain stock-purchase warrants (the Warrants) pursuant to the restructuring of Jacor Communications, Inc. (Jacor), excluding that portion of Warrants which was acquired by the Plan's Qualified Matching Contribution Account (the QMCA, as described below); (2) the past and proposed future holding of the Warrants by the Plan; and (3) the

disposition or exercise of the Warrants by the Plan; provided that the following conditions are satisfied:

(A) With respect to all participant accounts other than the QMCA, the Warrants were acquired pursuant to Plan provisions for individually-directed investment of such accounts;

(B) The Plan's receipt and holding of the Warrants occurred in connection with the restructuring of Jacor and the Warrants were made available to all shareholders of common stock of Jacor;

(C) The Plan's receipt and holding of the Warrants resulted from an independent act of Jacor as a corporate entity, and all holders of the common stock of Jacor, including the Plan, were treated in the same manner with respect to the restructuring of Jacor; and

(D) With respect to Warrants allocated to the QMCA, the authority for all decisions regarding the holding, disposition or exercise of the Warrants by the Plan will be exercised by an independent fiduciary acting on behalf of the Plan, to the extent that such decisions have not been passed through to Plan participants; and

(E) With respect to all other accounts (described below), the decisions regarding the holding, disposition or exercise of the Warrants have been, and will continue to be made in accordance with Plan provisions for individually-directed investment of participant accounts, by the individual Plan participants whose accounts in the Plan received Warrants in connection with the restructuring.

EFFECTIVE DATE: This exemption, if granted, will be effective as of January 11, 1993, except with respect to the Warrants held by the QMCA. With respect to those Warrants, the exemption, if granted, will be effective July 26, 1995.

Summary of Facts and Representations

1. Jacor, the Plan sponsor, has its principal place of business in Cincinnati, Ohio. Jacor owns and operates radio stations across the United States and is the parent company of an affiliated group of corporations. The Plan is a defined contribution employee benefit plan intended to satisfy the requirements of sections 401(a) and 401(k) of the Code. The Plan provides for individual participant accounts (the Accounts) and participant-directed investment of the Accounts among five investment funds, one of which invests exclusively in common stock of Jacor (the Jacor Securities Fund). Participants can also choose to invest in the Money Market Fund (replaced by the Stable Asset Fund as of April 1, 1994), the Bond Fund (replaced by the International Fund as of April 1, 1994), the Balanced Fund and the Growth Fund. The various funds can be described as follows:

(a) *Money Market Fund,* which invests exclusively in short-term U.S. Treasury obligations. The objective of this Fund is to provide stability of principal and current income consistent with that stability;

(b) *Bond Fund,* which invests in U.S. government and federal agency securities along with high quality corporate obligations. The objective of this Fund is to provide more income than short-term obligations, but greater stability than long-term bonds;

(c) *Balanced Fund,* which invests in equity securities issued by a broad range of companies along with corporate and government bonds. The objective of this Fund is to provide a balance between the growth potential of stock and the current income of bonds;

(d) *Growth Fund,* which invests in equity securities issued by a broad range of companies. The objective of this Fund is long-term growth;

(e) *Jacor Securities Fund,* which invests in equity securities issued by Jacor;

(f) *Stable Asset Fund,* which invests in public and private debt securities and mortgage loans. This Fund provides a fixed rate of return that is adjusted annually; and

(g) *International Fund,* which invests in equity securities of foreign corporations. The objective of this Fund is to provide long-term growth with international diversification.

2. Each participant may have as many as four Accounts under the Plan, known as the Elective Deferral Account, the Qualified Non-Elective Contribution Account, the QMCA and the Rollover Account. As of December 31, 1993, there were 416 participants in the Plan, all of whom had at least one Account with an investment in the Jacor Securities Fund. As of that same date, the Plan held total assets of approximately $3,390,755. The trustees of the Plan as of January 8, 1993, were Terry S. Jacobs, R. Christopher Weber and Jon M. Berry, all of whom were officers and shareholders of Jacor. Terry S. Jacobs resigned as trustee and officer of Jacor effective June 7, 1993 and as of the same date was replaced by Randy Michaels.

3. *Investment Direction.*

In general, all contributions (and related earnings) allocated to any of the Accounts on or before December 31, 1991 are invested in the Jacor Securities Fund. Contributions (and related earnings) allocated on or after January 1, 1992 to any Account other than the QMCA are subject to participant-directed investment. In general, all contributions (and related earnings) allocated to the QMCA on or after January 1, 1992 continue to be invested in the Jacor Securities Fund.[1]

In 1995, participants were given the authority to transfer all contributions (and related earnings) allocated to the QMCA and all other pre-1992 contributions and earnings to any of the other investment funds available under the Plan, in accordance with the following schedule:

(1) First Quarter of 1995—up to 25% of formerly restricted funds
(2) Second Quarter of 1995—up to 50% of formerly restricted funds
(3) Third Quarter of 1995—up to 75% of formerly restricted funds
(4) Fourth Quarter of 1995—up to 100% of formerly restricted funds

4. Jacor represents that it entered into a restructuring agreement with Zell/Chilmark in September, 1992. Zell/Chilmark is a Delaware limited partnership controlled by Samuel Zell and David Schulte. Zell/Chilmark was formed to invest in and provide capital and management support to companies that are engaged in significant recapitalizations or corporate restructuring. At the time of Jacor's restructuring, Zell/Chilmark had capital commitments or investments in excess of $1 billion. The Board of Directors of Jacor selected Zell/Chilmark to work with Jacor's creditors to formulate a restructuring plan. Zell/Chilmark was chosen because Jacor's Board believed that it would be able to raise the cash necessary to make a substantial equity investment and because of its experience in working with creditor groups.

5. The restructuring consisted of an equity infusion of approximately $6 million by Zell/Chilmark and was accomplished by way of a merger of a corporation wholly owned by Zell/Chilmark into Jacor. As part of this process, Zell/Chilmark acquired approximately 91.44% of Jacor's outstanding Common Stock. Upon approval by the Federal Communications Commission of the transfer of control of Jacor to Zell/Chilmark on April 23, 1994, Jacor's Class B Common Stock automatically converted to Class A Common Stock (the combination of the 2 classes of stock is now referred to as the New Common Stock). As a result of the restructuring, on January 11, 1993, all shareholders not electing to receive

[1] The Plan has special provisions which provide increased investment options to Plan participants once they attain age 55.

cash, including the Plan, received for each share of Common Stock held .0423618 shares of New Common Stock and .1611234 Warrants to purchase New Common Stock. The New Common Stock and the Warrants trade on the National Association of Securities Dealers Automated Quotation (NASDAQ) National Exchange. The Warrants are exercisable at $8.30 per share and expire on January 14, 2000. Jacor represents that the decision as to whether to keep the New Common Stock and Warrants held in the Jacor Securities Fund or to sell those securities for cash was passed through to Plan participants for all Accounts under the Plan other than the funds in the QMCA.[2] Decisions regarding securities held in the QMCA were made by the Trustees.

6. Along with the option of receiving New Common Stock and Warrants, shareholders who held shares as of November 27, 1992, were given the right to purchase additional New Common Stock (the Additional Rights Offering) at $5.74 per share.[3] Holders of New Common Stock could purchase 0.1237 additional shares of New Common Stock for each share of New Common Stock held immediately after the merger of the subsidiary of Zell/Chilmark with Jacor and after certain stock sales by creditors of Jacor (who had been issued stock in exchange for debt obligations) to Zell/Chilmark.[4] Pursuant to the Additional Rights Offering, Jacor sold a total of 1,000,000 shares of New Common Stock. The Plan Trustees made the decision, on behalf of the Plan, to purchase 4,457 shares of New Common Stock in the Additional Rights Offering.

7. Since the Warrants acquired by the Plan fail to satisfy the definition of ''qualifying employer securities'' contained in section 407(d)(5) of ERISA, the applicant is aware of the fact that prohibited transactions have occurred in violation of the Act. Accordingly, Jacor represents that within 90 days of the grant of this proposed exemption, Jacor will file Forms 5330 with the Internal Revenue Service and will pay all applicable excise taxes due with respect to past prohibited transactions not covered by this exemption.

8. Under the restructuring described above, the Plan received 36,038 shares of New Common Stock and 137,074 Warrants. Prior to the restructuring, there were 9,004,093 shares of Jacor common stock, of which 866,514 shares,[5] or approximately 9.6%, were in the Plan. After the restructuring, there were 9,004,093 shares of New Common Stock, so that the Plan held less than .5% of that amount. Jacor represents that, at the time the 137,074 Warrants were issued to the Plan, they represented 2.6% of the assets of the Plan. Since that time, 11,290 of the Warrants have been distributed to terminated participants. As of December 31, 1993, the remaining 125,784 Warrants represented 22.6% of the assets of the Plan. This increase is due to the increase in the value of each Warrant from $.20 on January 11, 1993 to $6.09 on December 31, 1993. Jacor represents that the decision of whether to hold, sell, or exercise the Warrants for all Accounts under the Plan other than the QMCA were passed through to the Plan participants.

9. To the extent that Plan participants do not have investment authority over the Warrants, decisions regarding Warrants held in the QMCA will be made by an independent fiduciary retained specifically for that purpose. The Fifth Third Bank (the Bank) has been retained as an independent fiduciary to represent the interests of the Plan with respect to all securities issued by Jacor including the Warrants, except to the extent that such investment authority is being exercised by participants in the Plan. At such time that the participants in the Plan are given full authority over all employer securities held in the Plan, the Bank states that it will no longer have any investment authority under the terms of its Trust Agreement. The Bank represents that, as of February 23, 1996, participants in the Plan have full investment authority over employer securities held by the Plan (see rep. 3, above).

10. The Bank is a subsidiary of Fifth Third Bancorp, Inc., a bank holding company that is headquartered in Cincinnati, Ohio. The Bank has been in existence for over 100 years. The trust department of the Bank has $6.6 billion of assets under management, of which $2.5 billion of assets is held by the Bank as fiduciary of over 500 plans that are subject to the Act. The Bank is not related to Jacor.

11. The Bank represents that it is fully aware of its duties and responsibilities as a fiduciary under the Act. In fulfilling its duties, the Bank reviewed the terms and conditions of the Common Stock and Warrants issued by Jacor and reviewed the most recent financial statements of Jacor and other material it considered appropriate to determine the financial condition of Jacor. Based on this review, and a review of the current market for the securities issued by Jacor, the Bank concluded, as of July 26, 1995, that it was currently in the best interest of the Plan's participants and beneficiaries for the Plan to retain all securities issued by Jacor that were currently held by the Plan and that were subject to the investment discretion of the Bank.

12. The Bank represents that it will continue to monitor the Plan's holding of those securities issued by Jacor that are subject to the investment discretion of the Bank. In exercising that discretion as a fiduciary under the Act, the Bank will on an on-going basis review all relevant financial information related to Jacor to determine whether the Plan should continue to hold or should sell the Jacor Common Stock and to determine whether the Plan should hold, sell or exercise the Warrants, or let the Warrants expire without exercise.[6]

13. In summary, the applicant represents that the transactions satisfy the criteria of section 408(a) of the Act for the following reasons: (a) the Plan's acquisition of the Warrants resulted from an independent act of the Employer; (b) with respect to all aspects of the restructuring, all holders of the Common Stock were treated in the same manner, including the Plan; (c) all decisions with respect to the Plan's acquisition, holding and control of the Warrants were made by the individual participants whose Accounts held interests in the Jacor Securities Fund, except with respect to the QMCA; (d) with respect to the QMCA, the Bank, an independent fiduciary reviewed the investments as of July 26, 1995 and determined that the Plan's continued holding of the employer securities was

[2] The applicant explains that, although Plan participants had no authority over the investment of pre-1992 contributions, they were given the authority to make decisions regarding the acquisition of employer securities for all funds in their Accounts other than the QMCA.

[3] The Department is not providing any exemptive relief for any prohibited transactions that may have arisen in connection with the Plan's ability to acquire such additional shares of New Common Stock.

[4] Zell/Chilmark and creditors who retained New Common Stock in the debt restructuring were also given the opportunity to purchase stock in the Additional Rights Offering.

[5] As part of the restructuring, 15,774 shares of Jacor common stock were tendered by Plan participants for cash. The remaining 850,740 shares were converted to New Common Stock in the restructuring.

[6] The Bank represents that it would only let the Warrants expire without exercise if they had no value, which could occur if the value of the New Common Stock drops below the exercise price of the Warrants ($8.30 per share) prior to the expiration of the Warrants on January 14, 2000. As of February 20, 1996, the value of the New Common Stock was $21.25. As a result, it is not likely that the Warrants would be allowed to expire without exercise. In any case, it is not anticipated that the Bank would be responsible for that decision since all investment authority in connection with the Warrants is currently with Plan participants.

appropriate and in the Plan's best interest; and (e) the Bank continued to monitor the holding of the employer securities by the QMCA until such time as Plan participants were given full authority over the investment, and determined whether the Plan should hold, sell or exercise the Warrants or let the Warrants expire without exercise.

FOR FURTHER INFORMATION CONTACT: Gary H. Lefkowitz of the Department, telephone (202) 219–8881. (This is not a toll-free number.)

EAI Partners, L.P. (EAI), Located in Norwalk, CT

[Application No. D–10147]

Proposed Exemption

Based on the facts and representations set forth in the application, the Department is considering granting an exemption under the authority of section 408(a) of the Act and section 4975(c)(2) of the Code and in accordance with the procedures set forth in 29 CFR Part 2570, Subpart B (55 FR 32836, 32847, August 10, 1990).[7]

Section I. Exemption for the In-Kind Transfer of Assets

If the exemption is granted, the restrictions of sections 406(a) and 406(b) of the Act and the sanctions resulting from the application of section 4975 of the Code, by reason of section 4975(c)(1) (A) through (F) of the Code, shall not apply, as of December 29, 1995, to the in-kind transfer of assets of employee benefit plans that are participant-directed account plans intended to satisfy section 404(c) of the Act and as to which EAI serves as a fiduciary (the Client Plans), including a plan established by EAI (the EAI Plan), as well as two plans that are sponsored by affiliates of EAI, namely, the Harding Service Corporation *et al.* Profit Sharing Plan and Trust (the Harding Plan) and the Stockwood VII, Inc. 401(k) Plan (the Stockwood Plan),[8] that are held in the Small Managers Equity Fund Trust (SMEF) maintained by EAI in exchange for shares of the EAI Select Managers Equity Fund (the Fund), an open-end investment company registered under the Investment Company Act of 1940 (the '40 Act) for which Evaluation Associates Capital Markets, Inc. (EACM), a wholly owned subsidiary of EAI, acts as investment adviser, in connection with the partial termination of SMEF.

This proposed exemption is subject to the following conditions:

(a) No sales commissions or other fees, including any fees payable pursuant to Rule 12b–1 of the '40 Act (the 12b–1 Fees), are paid by a Plan in connection with the purchase of Fund shares through the in-kind transfer of SMEF assets.

(b) All of the assets of a Plan that are held in SMEF are contributed by such Plan in-kind to the Fund in exchange for shares of such Fund. A Plan not electing to invest in the Fund receives a distribution of its allocable share of the assets of SMEF either in cash or in-kind.

(c) Each Plan receives shares of the Fund which have a total net asset value that is equal in value to such Plan's allocable share of the assets of SMEF as determined in a single valuation performed in the same manner at the close of the same business day, using independent sources in accordance with the procedures set forth in Rule 17a–7(b) (Rule 17a–7) under the 1940 Act, as amended, and the procedures established by the Fund pursuant to Rule 17a–7 for the valuation of such assets. Such procedures must require that all securities for which a current market price cannot be obtained by reference to the last sale price for transactions reported on a recognized securities exchange or NASDAQ be valued based on an average of the highest current independent bid and lowest current independent offer, as of the close of business on the Friday preceding the weekend of the in-kind contribution of SMEF assets to the Fund, determined on the basis of reasonable inquiry from at least three sources that are broker-dealers or pricing services independent of EAI.

(d) On behalf of each Plan, a second fiduciary who is independent of and unrelated to EAI (the Second Fiduciary) receives advance written notice of the in-kind transfer of assets of SMEF to the Fund and full written disclosure, which includes, but is not limited to, the following information concerning the Fund:

(1) A current prospectus for the Fund in which a Plan is considering investing.

(2) A statement describing the fees for investment advisory or similar services that are to be paid by the Fund to EACM; the fees retained by EACM for secondary services (the Secondary Services), as defined in paragraph g of Section II below; and all other fees to be charged to or paid by the Plan and by such Fund to EAI, EACM or to unrelated parties, including the nature and extent of any differential between the rates of the fees.

(3) The reasons why EAI considers such investment to be appropriate for the Plan.

(4) Upon request of the Second Fiduciary, a copy of the proposed exemption and/or a copy of the final exemption, if granted.

(e) On the basis of the foregoing information, the Second Fiduciary authorizes in writing the in-kind transfer of a Plan's assets invested in SMEF to the Fund, in exchange for shares of the Fund, and the fees received by EACM in connection with its investment advisory services to the Fund. Such authorization by the Second Fiduciary will be consistent with the responsibilities, obligations and duties imposed on fiduciaries under Part 4 of Title I of the Act.

(f) EAI sends by regular mail to the Second Fiduciary of each affected Plan, the following information:

(1) Not later than 30 days after the completion of the in-kind transfer transaction, a written confirmation which contains—

(A) The identity of each security that was valued for purposes of the transaction in accordance with Rule 17a–7(b)(4) of the '40 Act;

(B) The price of each such security involved in the transaction; and

(C) The identity of each pricing service or market maker consulted in determining the value of such securities.

(2) Within 90 days after the completion of each transfer, a written confirmation which contains—

(A) The number of SMEF units held by the Plan immediately before the transfer, the related per unit value and the total dollar amount of such SMEF units; and

(B) The number of shares in the Fund that are held by the Plan following the transfer, the related per share net asset value and the total dollar amount of such shares.

(g) On an ongoing basis, EAI provides a Plan investing in the Fund with—

(1) A copy of an updated prospectus of such Fund, at least annually; and

(2) Upon request, a report or statement (which may take the form of the most recent financial report, the current statement of additional information, or some other written statement) containing a description of all fees paid by the Fund to EAI and its affiliates.

(h) As to each Plan, the combined total of all fees received by EAI and/or its affiliates for the provision of services to the Plan, and in connection with the provision of services to the Fund in

[7] For purposes of this proposed exemption, reference to provisions of Title I of the Act, unless otherwise specified, refer also to the corresponding provisions of the Code.

[8] The Client Plans, the EAI Plan, the Harding Plan and the Stockwood Plan are collectively referred to herein as the Plans. In addition, the EAI Plan, the Harding Plan and the Stockwood Plan are collectively referred to herein as the Related Plans.

which the Plan invests, is not in excess of ''reasonable compensation'' within the meaning of section 408(b)(2) of the Act.

(i) All dealings between a Plan and the Fund are on a basis no less favorable to the Plan than dealings between the Fund and other shareholders.

(j) EAI maintains for a period of six years the records necessary to enable the persons described below in paragraph (k) to determine whether the conditions of this exemption have been met, except that (1) a prohibited transaction will not be considered to have occurred if, due to circumstances beyond the control of EAI, the records are lost or destroyed prior to the end of the six year period, and (2) no party in interest other than EAI, shall be subject to the civil penalty that may be assessed under section 502(i) of the Act or to the taxes imposed by section 4975 (a) and (b) of the Code if the records are not maintained or are not available for examination as required by paragraph (k) of this Section II; and

(k)(1) Except as provided in paragraph (k)(2) and notwithstanding any provisions of section 504 (a)(2) and (b) of the Act, the records referred to in paragraph (j) are unconditionally available at their customary location for examination during normal business hours by—

(A) Any duly authorized employee or representative of the Department, the Internal Revenue Service or the Securities and Exchange Commission (the SEC);

(B) Any fiduciary of a Plan who has authority to acquire or dispose of shares of the Fund owned by such Plan, or any duly authorized employee or representative of such fiduciary;

(C) Any contributing employer to any participating Plan or any duly authorized employee representative of such employer; and

(D) Any participant or beneficiary of any participating Plan, or any duly authorized representative of such participant or beneficiary.

(2) None of the persons described in paragraph (k)(1)(B)–(D) shall be authorized to examine trade secrets of EAI, or commercial or financial information which is privileged or confidential.

Section II. Definitions

For purposes of this proposed exemption:

(a) The term ''EAI'' means EAI Partners, L.P. and the term ''EACM'' refers to Evaluation Associates Capital Markets, Inc.

(b) An ''affiliate'' of EAI includes—

(1) Any person directly or indirectly through one or more intermediaries, controlling, controlled by, or under common control with EAI. (For purposes of this paragraph, the term ''control'' means the power to exercise a controlling influence over the management or policies of a person other than an individual.)

(2) Any officer, director, employee, relative or partner in such person, and

(3) Any corporation or partnership of which such person is an officer, director, partner or employee.

(c) The term ''Fund'' refers to the EAI Select Managers Investment Fund, a diversified open-end investment company registered under the '40 Act for which EACM serves as an investment adviser and may also provide some other ''Secondary Service'' (as defined below in paragraph (g) of this Section II) which has been approved by the Fund.

(d) The term ''net asset value'' means the amount for purposes of pricing all purchases and redemptions of Fund shares, calculated by dividing the value of all securities, determined by a method as set forth in a Fund's prospectus and statement of additional information, and other assets belonging to the Fund, less the liabilities chargeable to the portfolio, by the number of outstanding shares.

(e) The term ''relative'' means a ''relative'' as that term is defined in section 3(15) of the Act (or member of the ''family'' as that term is defined in section 4975(e)(6) of the Code), or a brother, a sister, or a spouse of a brother or a sister.

(f) The term ''Second Fiduciary'' means a fiduciary of a plan who is independent of and unrelated to EAI. For purposes of this exemption, the Second Fiduciary will not be deemed to be independent of and unrelated to EAI if—

(1) Such Second Fiduciary directly or indirectly controls, is controlled by, or is under common control with EAI;

(2) Such Second Fiduciary, or any officer, director, partner, employee, or relative of such Second Fiduciary is an officer, director, partner or employee of EAI (or is a relative of such persons;

(3) Such Second Fiduciary directly or indirectly receives any compensation or other consideration for his or her own personal account in connection with any transaction described in this proposed exemption. However, with respect to the Related Plans (i.e., the EAI Plan, the Harding Plan and the Stockwood Plan), the Second Fiduciary may receive compensation from EAI in connection with the transaction contemplated herein, but the amount or payment of such compensation may not be contingent upon or be in any way affected by the Second Fiduciary's ultimate decision regarding whether the Related Plans may participate in such transaction.

With the exception of the Related Plans, if an officer, director, partner or employee of EAI (or relative of such persons), is a director of such Second Fiduciary, and if he or she abstains from participation in the choice of a Client Plan's investment adviser, the approval of any such purchase or sale between a Client Plan and the Fund, and the approval of any change of fees charged to or paid by the Client Plan, the transaction described in Section I above, then paragraph (f)(2) of this Section II, shall not apply.

(g) The term ''Secondary Service'' means a service, other than investment advisory or similar service which is provided by EACM to the Fund. However, the term ''Secondary Service'' does not include any brokerage services provided by EAI Securities Inc. (EAISI) to the Fund.

EFFECTIVE DATE: If granted, this proposed exemption will be effective December 29, 1995.

Summary of Facts and Representations

Description of the Parties

1. The parties involved in the subject transaction are described as follows:

(a) *EAI* is a Delaware limited partnership maintaining its principal executive office in Norwalk, Connecticut. EAI provides investment consulting services to a number of employee benefit plan clients through SMEF, a collective investment fund. As of October 1, 1995, EAI had approximately $216 million of Plan assets under management in SMEF, of which $62 million was held for participant-directed plans.

(b) *SMEF*, a collective investment fund established by EAI, has been organized to comply with Revenue Ruling 81–100. SMEF is trusteed by Boston Safe Deposit and Trust Company. Following the in-kind transfer transaction that is described herein, SMEF has continued to exist albeit with reduced assets.

(c) *The Fund* was organized on September 27, 1995 as a Massachusetts business trust. It is registered as a no-load, open-end investment company with the SEC under the '40 Act. Shares of beneficial interest are being offered and sold pursuant to a registration statement under the Securities Exchange Act of 1933 Act, as amended.

(d) *EACM*, a wholly owned subsidiary of EAI, manages the Fund and

negotiates investment advisory contracts and contracts for Secondary Services. EACM also serves as the investment adviser to the Fund and will receive investment advisory fees from the Fund.

(e) *EAISI*, a wholly owned subsidiary of EAI, serves as the distributor of shares of the Fund but it does not receive any compensation from the Fund.

(f) *The Plans* which are covered by the subject transaction include certain Client Plans that are participant-directed account plans within the meaning of section 404(c) of the Act for which EAI formerly served as a fiduciary through its management of Plan assets that had been invested in SMEF. Also covered by the subject transaction are the EAI Plan as well as Plans that are sponsored by the Harding Services Corporation (Harding) and Stockwood VII, Inc. (Stockwood), which are affiliates of EAI.[9] EAI formerly provided investment management services to the Related Plans by reason of their investment in SMEF through the end of 1995 but it did not charge the Related Plans any fees with respect to such services. The EAI Plan, the Harding Plan and the Stockwood Plan are participant-directed, defined contribution plans.

As of September 30, 1995, the participant, asset breakdown and the identities of the trustees of the Related Plans were as follows:

Related plans	No. participants	Total assets	Trustees
EAI Plan	121	$11,877,063	Elke Bartel, Jeanne Gustafson and Malin Zergiebel.
Harding Plan	99	9,800,000	Kurt Borowsky and Frank Richardson.
Stockwood Plan	10	371,000	Kurt Borowsky and Frank Richardson.

It is represented that none of the Related Plans is a party in interest with respect to the other within the meaning of section 3(14) of the Act.

(g) *Wilmington Trust Company (WTC)* of Wilmington, Delaware, has been retained by EAI to serve as the Second Fiduciary for the Related Plans. In such capacity, WTC was hired to approve the in-kind transfer of the assets of the Related Plans that had been invested in SMEF to the Fund, in exchange for shares of the Fund. WTC, the primary subsidiary of Wilmington Trust Corporation, was established in 1903. WTC is wholly independent of EAI and its affiliates.

As of December 31, 1994, WTC exercised discretionary authority over approximately $26.5 billion of fiduciary assets, including approximately $14.8 billion of the assets of plans covered by the Act as well as non-qualified plans. Also as of December 31, 1994, WTC served as directed trustee, agent or custodian with respect to more than $5 billion of assets of plans covered by the Act and nonqualified employee benefit plans.

Description of the Transaction

2. Prior to December 29, 1995, EAI required the Plans involved herein to withdraw their assets from SMEF. It then provided these Plans with the opportunity to contribute their withdrawn SMEF assets to the Fund in exchange for shares of the Fund. The principal reason for the in-kind transfer of the Plans' assets that had been invested in SMEF to the Fund was an SEC ruling pertaining to section 3(c)(1) of the '40 Act.[10] In that ruling, the SEC opined that each participant in a Plan providing for participant-directed investments would be counted for purposes of subjecting a collective investment fund, such as SMEF, to reporting and disclosure requirements applicable to open-end companies. In accordance with the SEC interpretation, EAI believed that the assets of the affected Plans had to be removed from SMEF prior to January 1, 1996.

In addition, EAI believed that the interests of these Plans would be appropriately served by use of a mutual fund, such as the Fund. According to EAI, mutual funds are under the supervision of the SEC, which places a greater emphasis on participant disclosure and which provides a mechanism for approval of disclosure documentation for the Fund. Moreover, EAI noted that mutual funds would afford Plan sponsors and participants with easier monitoring of investments since information concerning investment performance of the Fund would be available in daily newspapers of general circulation.

Accordingly, EAI requests retroactive exemptive relief from the Department with respect to the in-kind transfer of the assets of certain Plans that had been invested in SMEF, in exchange for shares of the Fund. The in-kind transfer transaction occurred on December 29, 1995 in connection with the partial termination of SMEF. If granted, the proposed exemption would be effective as of December 29, 1995.[11]

3. Plan assets formerly invested in SMEF that were exchanged for shares of the Fund occurred in two simultaneous phases. First, EAI obtained written approvals from all Second Fiduciaries with respect to the in-kind transfer. EAI then transferred to each Plan its allocable share of all assets of SMEF. It is represented that such assets consisted of marketable securities and cash balances. Second, the distributed assets were transferred by the Plan to the Fund, and, in exchange, the Fund issued to each Plan an appropriate number of shares of the Fund. These shares had an aggregate value equal to the aggregate value of each Plan's allocable share of SMEF assets that were transferred to the Fund.

4. With respect to the initial disclosures provided to each Second Fiduciary, EAI represents that prior to

[9] Specifically, EAI and EACM both have officers and directors and, in the case of EAI, equity holders who are officers, directors and affiliates of Harding and Stockwood.

[10] See *Latham & Watkins*, SEC No-Action Letter, 1994 SEC No Act. LEXIS 910 (December 28, 1994).

[11] EAI is not requesting an exemption with respect to the investment in the Fund by the EAI Plan, the Harding Plan or the Stockwood Plan. EAI represents that the Related Plans may acquire or sell share of the Fund pursuant to Prohibited Transaction Exemption (PTE) 77–3 (42 FR 18734, April 8, 1977). PTE 77–3 permits the acquisition or sale of shares of a registered, open-end investment company by an employee benefit plan covering only employees of such investment company, employees of the investment adviser or principal underwriter for such investment company, or employees of any affiliated person (as defined therein) of such investment adviser or principal underwriter, provided certain conditions are met. The Department expresses no opinion on whether any transactions between the Fund and the Related Plans would be covered by PTE 77–3.

Similarly, EAI is not requesting exemptive relief with respect to future acquisitions or sales of shares of the Fund by the Client Plans. EAI represents that such transactions would be covered under PTE 77–4 (42 FR 18732, April 8, 1977). In pertinent part, PTE 77–4 permits the purchase and sale by an employee benefit plan of shares of a registered open-end investment company when a fiduciary with respect to the plan is also the investment adviser of the investment company. However, again, the Department expresses no opinion on whether any transactions between the Client Plans and the Fund would be covered by PTE 77–4.

investing in the Fund, it obtained the affirmative written approval of a Second Fiduciary of a Plan who was generally the Plan's named fiduciary, trustee or sponsoring employer. In the case of the Related Plans, WTC was retained for this purpose. EAI provided each Second Fiduciary with a current prospectus for the Fund. The disclosure statement described the fees for investment advisory or similar services, the fees for Secondary Services and all other fees to be charged to, or paid by, a Plan (and by such Fund) to EACM or to unrelated parties, including the nature and extent of any differential between the rates of the fees. In addition, the disclosure statement specified the reasons why EAI considered an investment in the Fund was appropriate for a Plan.

On the basis of such information, the Second Fiduciary authorized the investment of Plan assets in the Fund through an in-kind transfer of assets received from SMEF. Such authorization was given by the Second Fiduciary to EAI in writing.

5. EAI represents that the in-kind transfer transaction was conducted over the weekend of December 29, 1995 in accordance with Rule 17a–7 under the '40 Act and the procedures established by the Fund pursuant to Rule 17a–7 for the valuation of such assets. EAI notes that Rule 17a–7 provides an exemption from section 17(a) of the '40 Act, which prohibits, among other things, principal transactions between an investment company and its investment adviser or affiliates of the investment adviser.

Among the conditions of Rule 17a–7 [12] is the requirement that the transaction be effected at the ''independent current market price'' for the security involved. In this regard, the ''current market price'' for specific types of SMEF assets involved in the in-kind transfer was determined as follows:

(a) If the security was a ''reported security'' as the term is defined in Rule 11Aa3–1 under the Securities Exchange Act of 1934 (the '34 Act), the last sale price with respect to such security reported in the consolidated transaction reporting system (the Consolidated System) for December 29, 1995; or if there were no reported transactions in the Consolidated System that day, the average of the highest current independent bid and the lowest current independent offer for such security (reported pursuant to Rule 11Ac1–1 under the '34 Act), as of the close of business on December 29, 1995; or

(b) If the security was not a reported security, and the principal market for such security was an exchange, then the last sale on such exchange on December 29, 1995; or if there were no reported transactions on such exchange that day, the average of the highest current independent bid and lowest current independent offer on such exchange as of the close of business on December 29, 1995; or

(c) If the security was not a reported security and was quoted in the NASDAQ system, then the average of the highest current independent bid and lowest current independent offer reported on Level 1 of NASDAQ as of the close of business on December 29, 1995 or

(d) For all other securities, the average of the highest current independent bid and lowest current independent offer as of the close of business on December 29, 1995, determined on the basis of reasonable inquiry.

6. As stated above, the in-kind transfer transaction occurred over the weekend of December 29, 1995, using the market values as of the preceding Friday. The value of SMEF was determined by the custodian and portfolio accountant for the Fund in coordination with EAI. Securities listed on the exchange were valued at their closing prices on that Friday. Other securities were valued based on the average of current independent bid and ask quotations as of that Friday obtained from three independent brokers (or under a method otherwise in accordance with Rule 17a–7). Any fees charged by independent brokers were the responsibility of EAI. The contribution of securities was completed by the opening of business on January 2, 1996, such that Plans whose SMEF assets were contributed to the Fund held shares of the Fund which had the same aggregate value as their units in SMEF as of the preceding Friday. No sales commissions or other fees, including 12b–1 Fees, were paid by the Plans in connection with the purchase of Fund shares through the in-kind transfer of a Plan's assets that were invested in SMEF.

7. Following the in-kind transfer transaction, EAI provided each affected Plan with a written confirmation statement on January 31, 1996. This statement set forth (a) the number of SMEF units held by the Plan immediately before the conversion, the related per unit value and the total dollar amount of such SMEF units; and (b) the number of shares of the Fund that are held by the Plan following the conversion, the related per share net asset value and the total dollar amount of such shares.

In addition, on January 31, 1996, EAI provided each affected Plan with written confirmation of (a) the identity of each security that was valued for purposes of the transaction in accordance with Rule 17a–7(b)(4); (b) the price of each such security for purposes of the transaction; and (c) the identity of each pricing service or market maker consulted in determining the value of such securities.

Representations of the Second Fiduciary for the Related Plans Regarding the In-Kind Transfer

8. As stated above, WTC was retained by EAI as the Second Fiduciary to oversee the in-kind transfer transaction on behalf of the EAI Plan, the Stockwood Plan and the Harding Plan. In such capacity, WTC represented that it understood and accepted the duties, responsibilities and liabilities in acting as a fiduciary with respect to the Related Plans including those duties, responsibilities and liabilities that are imposed on fiduciaries under the Act.

WTC stated that it considered the effect and the implications of the transaction on the Related Plans as well as other Plan clients of EAI which had invested in SMEF. WTC noted that although SMEF would continue to exist after December 31, 1995, it would be maintained for Plans that were not participant-directed. Thus, WTC explained that the in-kind transfer transaction was being offered to certain Plans invested in SMEF on terms that were comparable to and no less favorable than the terms that would have been reached among unrelated parties.

WTC represented that the in-kind transfer transaction was in the best interest of the Related Plans and their participants and beneficiaries for the following reasons: (a) In terms of the investment policies and objectives pursued, the Fund substantially replicates SMEF and thus the impact of the transaction on a Related Plan and its participants would be *de minimis*; (b) the Fund would probably continue to experience relative investment performance similar in nature to SMEF given the continuity of investment objectives and policies, management oversight and portfolio management personnel; (c) the in-kind transfer

[12] Rule 17a–7 also includes the following requirements: (a) the transaction must be consistent with the investment objectives and policies of the Fund, as described in its registration statement; (b) the security that is the subject of the transaction must be one for which market quotations are readily available; (c) no brokerage commissions or other remuneration may be paid in connection with the transaction; and (d) the Fund's board of directors (i.e., those directors who are independent of the Fund's investment adviser) must adopt procedures to ensure that the requirements of Rule 17a–7 are followed, and determine no less frequently than quarterly that the transactions during the preceding quarter were in compliance with such procedures.

transaction would not adversely affect the cash flows, liquidity or investment diversification of a Related Plan; (d) the benefits to be derived by the Related Plans and their participants investing in the Fund (e.g., broader distribution permitted of the Fund to different types of plans impacting positively on the asset size of the Fund and resulting in cost savings to shareholders) would more than offset the impact of minimum additional expenses that might be borne by the Related Plans.

In opining on the appropriateness of the in-kind transfer transaction, WTC represented that it conducted an overall review of the Related and their respective Plan documents. WTC also stated that it examined the total investment portfolios for the Related Plans to determine whether or not the Related Plans were in compliance with their investment objectives and policies. Further, WTC stated that with respect to the Related Plans, it examined their overall liquidity requirements and reviewed the concentration of their assets that had been invested in SMEF as well as the portion of SMEF that comprised their assets. Finally, WTC represented that it reviewed the diversification provided by the investment portfolios of the Related Plans. Based upon its review and analysis of the foregoing, WTC represented that the in-kind transfer transaction would not adversely affect the total investment portfolios of the Related Plans or compliance by the Related Plans with their stated investment objectives, policies, cash flows, liquidity positions or diversification requirements.

As the Second Fiduciary, WTC represented that it was provided by EAI with the confirmation statements described in Representation 7. In addition, WTC stated that it supplemented its findings following review of the post-transfer account information to confirm whether or not the in-kind transfer transaction had resulted in the receipt by the Related Plans of shares of the Fund equal in value to of each Related Plan's *pro rata* share of assets of SMEF on the conversion date.

Ongoing Disclosures and Other Exemptive Conditions

9. On an annual basis, EAI will provide each affected Plan with a copy of an updated prospectus for the Fund. Upon request, the Plan will be provided with a report or statement (which may take the form of the most recent statement of additional information, or some other written statement) containing a description of all fees paid by the Fund to EACM.

In addition, as to each individual Plan, the combined total of all fees received by EAI and/or its affiliates for the provision of services to the Plans, and in connection with the provision of services to the Fund will not be in excess of ''reasonable compensation'' within the meaning of section 408(b)(2) of the Act. Further, all dealings by or between the Plans and the Fund will remain on a basis which is at least as favorable to the Plans as such dealings are with other shareholders of the Fund.

10. In summary, EAI represents that the in-kind transfer transaction described herein satisfies the statutory criteria for an exemption under section 408(a) of the Act because:

(a) A Second Fiduciary authorized in writing, such in-kind transfer prior to the transaction and only after such Second Fiduciary received full written disclosure of information concerning the Fund.

(b) Each Plan received shares of the Fund in connection with the in-kind transfer of assets from SMEF to the Fund which were equal in value to the Plan's allocable share of assets that had been invested in SMEF on the date of the transfer as determined in a single valuation performed in the same manner and at the close of the business day, using independent sources in accordance with procedures established by the Fund which complied with Rule 17a–7 of the '40 Act, as amended, and the procedures established by the Fund pursuant to Rule 17a–7 for the valuation of such assets.

(c) Within 30 days following the completion of the in-kind transfer transaction, EAI provided the Second Fiduciary of each affected Plan with written confirmation containing (1) the identity of the security that was valued for purposes of the transaction in accordance with Rule 17a–7(b)(4) of the '40 Act, (2) the price of the security involved in the transaction; and (3) the identity of the pricing service or market maker consulted in determining the value of such securities.

(d) Within 90 days following the in-kind transfer, EAI mailed to the Second Fiduciary of each Plan, written confirmation containing (1) the number of SMEF units held by the Plan immediately before the transfer, the related per unit value and the total dollar amount of such SMEF units; and (2) the number of shares in the Fund that were held by the Plan following the transfer, the related per share net asset value and the total dollar amount of such shares.

(e) As to each Plan, the combined total of all fees received by EAI and/or its affiliates for the provision of services to the Plans, and in connection with the provision of services to the Fund will not be in excess of ''reasonable compensation'' within the meaning of section 408(b)(2) of the Act.

(f) No sales commissions were paid by a Plan in connection with the acquisition of shares of the Fund.

(g) With respect to investments in a Fund by the Plans, each Second Fiduciary received full and detailed written disclosure of information concerning the Fund, including a current prospectus and a statement describing the fee structure, and such Second Fiduciary authorized, in writing, the investment of the Plan's assets in the Fund and the fees paid by the Fund to the EACM.

(h) EAI will provide ongoing disclosures to Second Fiduciaries of Plans to verify the fees charged by the EACM to the Fund.

(i) All dealings by or between the Plans and the Fund have been and will remain on a basis which is at least as favorable to the Plans as such dealings are with other shareholders of the Fund.

Notice to Interested Persons

Notice of the proposed exemption will be given to Second Fiduciaries of Plans that have investments in SMEF and from whom approval was sought for the in-kind transfer of Plan assets to the Fund. Such notice will be provided to interested persons by first class mail within 14 days following the publication of the notice of pendency in the Federal Register. Such notice will include a copy of the notice of proposed exemption as published in the Federal Register as well as a supplemental statement, as required pursuant to 29 CFR 2570.43(b)(2), which shall inform interested persons of their right to comment on and/or to request a hearing. Comments and requests for a public hearing are due within 44 days of the publication of the notice of proposed exemption in the Federal Register.

FOR FURTHER INFORMATION CONTACT: Ms. Jan D. Broady of the Department, telephone (202) 219–8881. (This is not a toll-free number.)

Pension Plan of Roper Hospital, Inc. (the Plan) Located in Charleston, South Carolina

[Application No. D–10163]

Proposed Exemption

The Department is considering granting an exemption under the authority of section 408(a) of the Act and section 4975(c)(2) of the Code and

in accordance with the procedures set forth in 29 CFR Part 2570, Subpart B (55 FR 32836, 32847, August 10, 1990). If the exemption is granted, the restrictions of sections 406(a), 406 (b)(1) and (b)(2) of the Act and the sanctions resulting from the application of section 4975 of the Code, by reason of section 4975(c)(1) (A) through (E) of the Code, shall not apply to the proposed cash sale (the Sale) by the Plan of Separate Investment Account Group Annuity Policy No. GA–4619 (the Policy) maintained by New England Mutual Life Insurance Company (NEL) to Roper Health System, Inc. (the Hospital), the Plan sponsor and a party in interest with respect to the Plan, provided the following conditions are satisfied: (a) The Sale is a one-time transaction for cash; (b) the Plan receives no less than the greater of the fair market value of the Policy at the time of the Sale, or $494,130; and (c) the Plan does not pay any commissions or other expenses in connection with the transaction.

Summary of Facts and Representations

1. The Hospital is a non-profit corporation with its principal office at Charleston, South Carolina. The Hospital sponsors the Plan, which is a defined benefit plan which had 2,431 participants and assets of approximately $22,936,604 as of December 31, 1994. Wachovia Bank of South Carolina, N.A. (the Bank) is the Plan's trustee. The Finance Committee of the Board of Trustees of the Hospital (the Finance Committee), however, has investment discretion with respect to the Policy. The Finance Committee consists of officers of the Hospital.

2. In order to better serve the retirement goals of its employees, the Board of Trustees of the Hospital (the Board) has determined to restructure its retirement program. To that end, the Board has approved the termination of the Plan effective as of September 30, 1995. In place of the Plan, the Board has approved the adoption of a tax-deferred savings plan under section 403(b) of the Code and an annuity plan under section 403(a) of the Code. Pursuant to the termination agreement (the Agreement), any assets remaining in the Plan after all benefit liabilities have been satisfied in accordance with the Act will be allocated and distributed to Plan participants in accordance with the allocation formulas specified in the Agreement. Accordingly, it is the Hospital's intent that the assets in the Plan be liquidated and distributed or applied for the benefit of participants and beneficiaries of the Plan. The applicant represents that pursuant to the terms of the Agreement participants' accrued benefits (although not surplus assets) were distributed on or about December 15, 1995. Distribution of the surplus assets, which will include the proceeds from the sale of the Policy to the Hospital (if the exemption proposed herein is granted), will not occur until later in 1996.

3. Commencing in March of 1987 and continuing until March of 1988, the Plan's prior trustees (the Prior Trustees), who consisted of individuals who were officers of the Hospital, invested a total of $1,398,064 in the Policy maintained by NEL. NEL maintains a separate investment fund under the Policy known as the Developmental Properties Account (the DPA). The DPA is invested in income-producing properties throughout the United States. During the early 1990's, the DPA declined significantly in value due to the recession and general downturn in the real estate market, both of which adversely affected virtually all real estate investment funds. The DPA currently is ''frozen'', meaning that no withdrawal requests are being honored by NEL. In fact, withdrawal requests have not been honored by NEL since June 30, 1991. Since that date, the Policy has declined in value by approximately $909,316. The Hospital first became aware that the DPA had been frozen at the same time as other investors, on or about November 15, 1991, through the 1991 Third Quarter Report provided by NEL, and without any opportunity to liquidate the Plan's investment. Accordingly, despite the DPA's decline in value, the Plan has been forced to continue to hold the Policy.[13] As of December 31, 1995, the fair market value of the Plan's interest in the DPA was $494,130. The fair market value was determined by NEL by multiplying the Plan's percentage ownership in the DPA by the aggregate fair market value of the assets of the DPA.

4. The applicant states that Mr. Fred Hyder of NEL has represented that at least one investor in the DPA sold its interest in the DPA to an unrelated buyer for one-third of its fair market value as determined by NEL. The investor was a retirement plan that had been terminated by the sponsoring employer. The trustee of the retirement plan was forced to sell its interest in the DPA to an unrelated buyer well below its stated fair market value in order to make distributions to participants upon termination. Mr. Hyder also indicated that in his opinion there is very little activity in the secondary market due to the inability of a DPA investor to sell its interest in the DPA to an unrelated buyer for its stated fair market value.

5. The Hospital has offered to purchase the Plan's interest in the DPA for the greater of its current fair market value as determined by NEL (without any diminution in value as described in rep. 4, above), or $494,130. Under Section V of the Policy, the Plan cannot sell its interest in the DPA without the consent of NEL (which consent cannot be unreasonably withheld). However, NEL has agreed to the transfer of the Plan's interest in the DPA to the Hospital, provided the exemption proposed herein is granted. The applicant represents that the Finance Committee has determined that the sale of the Policy to the Hospital is in the best interests of the Plan and its participants and beneficiaries because the sale will allow the Bank to liquidate the Plan's investment in the DPA for the investment's current fair market value and to distribute or apply the proceeds from the sale to participants and beneficiaries in accordance with the Agreement. If the exemption proposed herein is denied, there is no viable purchaser for the DPA other than the Hospital. In addition, the Finance Committee represents that if the exemption were denied, then the Plan would be required to continue as a wasting trust solely for the purpose of holding the Policy until it can be liquidated, which is unlikely to occur in the near future.

6. The fair market value of the Policy will be determined by the value reported by NEL as of the end of the quarter preceding the date of sale. There will be no reduction in this value as described in rep. 4, above. Copley Real Estate Advisors (Copley), an indirect subsidiary of NEL, acts as an asset manager and advisor to NEL with respect to the DPA. Copley selects qualified appraisal firms to conduct annual outside appraisals on the properties which make up the DPA. At quarterly dates between annual appraisals, Copley's asset management group prepares internal valuations. Copley represents that the internal valuations are based on the work that is completed by the outside appraiser and the same basic valuation methods used by the outside appraisers are used for the internal valuation. The Hospital represents that the valuations reported by NEL provide a reliable indication of the fair market value of the Policy and

[13] The Department notes that the decisions to acquire and hold the Policy are governed by the fiduciary responsibility requirements of Part 4, Subtitle B, Title I of the Act. In this regard, the Department is not herein proposing relief for any violations of Part 4 which may have arisen as a result of the acquisition and holding of the Policy issued by NEL.

the DPA. NEL and Copley are independent of the Hospital and the Bank.

7. In summary, the applicant represents that the proposed transaction satisfies the criteria contained in section 408(a) of the Act because: (a) The Sale is a one-time transaction for cash, and the Plan will pay no commissions or other expenses in connection with the Sale; (b) the Plan will receive cash for the Policy in an amount not less than the greater of the fair market value of the Policy as of the date of the Sale, or $494,130; (c) the fair market value of the Policy will be established by NEL, a party unrelated to the Plan and the Hospital; and d) the Sale will remove the Policy, which has been declining in value and is illiquid, from the Plan.

FOR FURTHER INFORMATION CONTACT: Gary H. Lefkowitz of the Department, telephone (202) 219–8881. (This is not a toll-free number.)

First Virginia Banks, Inc., Located in Falls Church, Virginia

[Application Nos. D–10175 thru D–10177]

Proposed Exemption

The Department is considering granting an exemption under the authority of section 408(a) of the Act and section 4975(c)(2) of the Code and in accordance with the procedures set forth in 29 CFR Part 2570, Subpart B (55 FR 32836, 32847, August 10, 1990).

Section I—Transactions

The restrictions of sections 406(a), 406(b)(1) and 406(b)(2) of the Act and the sanctions resulting from the application of section 4975 of the Code, by reason of section 4975(c)(1) (A) through (E) of the Code, shall not apply to the following transactions provided that all of the conditions set forth in Section II below are met:

(a) The cash sale on December 23, 1994 of certain variable rate certificates of deposit (CDs) issued by Merrill Lynch National Bank, Salt Lake City, Utah (the Merrill Lynch CDs) by forty (40) employee benefit plans, Keogh plans and individual retirement accounts (IRAs), for which First Knoxville Bank in Knoxville, Tennessee (the Bank) serves as a fiduciary, to First Virginia Banks, Inc. (First Virginia), a party in interest or disqualified person with respect to such plans and IRAs;

(b) The cash sale on various dates during 1995 of certain fixed rate CDs issued by various unrelated financial institutions (the Fixed Rate CDs) by eighteen (18) employee benefit plans, Keogh plans and IRAs, for which the Bank serves as a fiduciary to First Virginia, a party in interest or disqualified person with respect to such plans and IRAs; and

(c) The proposed cash sale of certain additional fixed rate CDs issued by various unrelated financial institutions (the Additional Fixed Rate CDs) by approximately twenty-one (21) employee benefit plans, Keogh plans and IRAs, for which the Bank serves as a fiduciary, to First Virginia, a party in interest or disqualified person with respect to such plans and IRAs.

Section II—Conditions

(a) Each sale is a one-time transaction for cash;

(b) Each plan or IRA (hereafter referred to as ''Plan'') receives an amount which is equal to the greater of (i) the face amount of the CDs owned by the Plan, plus accrued but unpaid interest, at the time of sale, or (ii) the fair market value of the CDs owned by the Plan as determined by an independent, qualified appraiser at the time of the sale;

(c) The Plans do not pay any commissions or other expenses with respect to the sale of such CDs;

(d) The Bank, as trustee of the Plans, determines that the sale of the CDs is in the best interests of each Plan and its participants and beneficiaries at the time of the transaction;

(e) The Bank takes all appropriate actions necessary to safeguard the interests of the Plans and their participants and beneficiaries in connection with the transactions;

(f) Each Plan receives a reasonable rate of interest on the CDs during the period of time such CDs are held by the Plan;

(g) The Bank or an affiliate maintains for a period of six years the records necessary to enable the persons described below in paragraph (h) to determine whether the conditions of this exemption have been met, except that (1) a prohibited transaction will not be considered to have occurred if, due to circumstances beyond the control of the Bank or affiliate, the records are lost or destroyed prior to the end of the six-year period, and (2) no party in interest other than the Bank or affiliate shall be subject to the civil penalty that may be assessed under section 502(i) of the Act or to the taxes imposed by section 4975(a) and (b) of the Code if the records are not maintained or are not available for examination as required by paragraph (h) below; and

(h) (1) Except as provided below in paragraph (h)(2) and notwithstanding any provisions of section 504(a)(2) of the Act, the records referred to in paragraph (g) are unconditionally available at their customary location for examination during normal business hours by—

(i) Any duly authorized employee or representative of the Department or the Internal Revenue Service,

(ii) Any fiduciary of the Client Plans who has authority to acquire or dispose of shares of the Funds owned by the Client Plans, or any duly authorized employee or representative of such fiduciary, and

(iii) Any participant or beneficiary of the Client Plans or duly authorized employee or representative of such participant or beneficiary;

(2) None of the persons described in paragraph (h)(1)(ii) and (iii) shall be authorized to examine trade secrets of the Bank, or commercial or financial information which is privileged or confidential.

EFFECTIVE DATE: The proposed exemption, if granted, will be effective as of December 23, 1994, for the transactions described in Section I(a) above, and the various appropriate sale dates in 1995 for the transactions described above in Section I(b).

Summary of Facts and Representations

1. The Bank is a wholly-owned subsidiary of First Virginia. The Bank, formerly called the First National Bank of Knoxville, was acquired by First Virginia in June 1994. The Bank serves as trustee, directed trustee, or custodian of various small employee benefit plans, Keogh plans and IRAs (collectively, the Plans). The Bank, as trustee, has investment discretion for the assets of the Plans.

The Bank represents that following its acquisition by First Virginia, a number of problems surfaced upon review of the investment portfolios of the Plans regarding their acquisition and holding of certain CDs, as discussed below.[14]

[14] The Department is expressing no opinion in this proposed exemption regarding whether the acquisition and holding of the CDs by the Plans violated any of the fiduciary responsibility provisions of Part 4 of Title I of the Act.

The Department notes that section 404(a) of the Act requires, among other things, that a fiduciary of a plan act prudently, solely in the interest of the plan's participants and beneficiaries, and for the exclusive purpose of providing benefits to participants and beneficiaries when making investment decisions on behalf of a plan. Section 404(a) of the Act also states that a plan fiduciary should diversify the investments of a plan so as to minimize the risk of large losses, unless under the circumstances it is clearly prudent not to do so.

In this regard, the Department is not providing any opinion as to whether a particular category of investments or investment strategy would be considered prudent or in the best interests of a plan as required by section 404 of the Act. The determination of the prudence of a particular investment or investment course of action must be made by a plan fiduciary after appropriate consideration to those facts and circumstances that,

The Merrill Lynch CDs

2. On October 18, 1993, the Bank, in its capacity as a fiduciary of certain Plans, purchased the Merrill Lynch CDs through the brokerage firm of Dunham & Associates Investment Counsel, Inc. (Dunham) of San Diego, California. The Bank states that Dunham did not provide any investment advice as a fiduciary regarding the investments made by the Bank in the Merrill Lynch CDs for the Plans.

There were 40 Plans involved in the purchase of the Merrill Lynch CDs by the Bank. Of these 40 Plans, approximately 32 Plans had only one participant covered by the Plan. The Plan with the largest number of participants was the Collier Development Company Profit Sharing Plan (the Collier P/S Plan), which had 83 participants and beneficiaries. The Collier P/S Plan had $101,149 in total assets, of which $26,000 or approximately 26 percent was invested in the Merrill Lynch CDs. The Plan with the largest amount of assets was the Theodore Haase, M.D., IRA (the Haase IRA) which had total assets of $1,172,511, at the time of the transactions. The Haase IRA had $21,000 invested in the Merrill Lynch CDs, which represented approximately two (2) percent of its total assets. The Plan with the largest investment in the Merrill Lynch CDs was the Gordon S. Hutchins IRA, which had such CDs with a face amount of $99,000. This amount represented approximately 64 percent of such Plan's total assets.

The percentage of a Plan's total assets represented by investments in the Merrill Lynch CDs varied from as little as one (1) percent [e.g. the Mulford Enterprises Profit Sharing Plan] to as much as 92 percent [e.g. the Audrey Denton IRA]. However, most of the Plans had less than 25 percent of their total assets invested in the Merrill Lynch CDs.

3. The Merrill Lynch CDs were issued by Merrill Lynch National Bank in Salt Lake City, Utah, with a total face value of $1,995,000, and are scheduled to mature on October 18, 1998. The Merrill Lynch CDs owned by the Plans had a total face value of $894,500. The Bank states that the interest rate on the Merrill Lynch CDs was fixed at 5.00 percent per annum for the first year. However, the interest rate in the subsequent years until maturity on October 18, 1998, is a stated interest rate offset by the current six-month London Interbank Offered Rate (LIBOR) as follows: (i) years two and three—8.50 percent per annum minus six-month LIBOR; and (ii) years four and five—10.50 percent minus six-month LIBOR.

4. The Bank represents that the information provided by Dunham to the Bank prior to the Bank's purchase of the Merrill Lynch CDs on behalf of the Plans indicated that there was no early withdrawal penalty. However, the Bank states that when it requested to redeem the Merrill Lynch CDs without a withdrawal penalty, the request was declined by Dunham, who indicated that such CDs could not be redeemed prior to maturity, with or without penalty.

5. The Bank represents that the fair market value of the Merrill Lynch CDs was significantly below their face value as of December 1994. The Bank states that the significant decline in the fair market value of the Merrill Lynch CDs was attributable to two factors: (i) the fact that the interest rate on the CDs dropped to 2.54 percent (8.50 percent minus LIBOR), effective for the six-month period beginning October 18, 1994; [15] and (ii) rising interest rates in the marketplace for comparable fixed income investments of the same duration, as measured by various interest rate indexes at the time.

Therefore, the Bank made a determination that it would be in the best interests of the Plans to sell the CDs to the Holding Company to avoid the investment losses which would result to the Plans from any sale on the open market.

6. Davenport & Company of Virginia, Inc. (Davenport), an independent qualified appraiser located in Richmond, Virginia, appraised the Merrill Lynch CDs as having a fair market value of approximately $70.75 per $100 of face value, as of December 23, 1994. Davenport's analysis described the Merrill Lynch CDs as ''inverse floaters'' paying below market interest rates at the time of the transaction. Davenport states that the Merrill Lynch CDs are a ''derivative type of security'' which involves a complicated pricing process to determine market value. Davenport represents that dealers trading such securities use data from the interest rate swap market and various interest rate forecasts to determine their bid prices. In addition, Davenport notes that since the Merrill Lynch CDs are traded over-the-counter and are not listed on an exchange, dealers have different options as to how to value such securities. Davenport concluded that as a result of the then current interest rates, as measured by LIBOR and other indexes at the time of the transaction, and market data concerning interest rate forecasts, there were few dealers or other buyers interested in purchasing the Merrill Lynch CDs without a significant discount on their face value.

7. On December 23, 1994, the Holding Company purchased the Merrill Lynch CDs from the Plans for cash at their full face value, an amount which was significantly above the fair market value of the CDs at that time as determined by Davenport. In addition, the Holding Company paid the Plans interest at the originally stated rate of 5.00 percent per annum through the date of purchase, even though the Merrill Lynch CDs began earning interest at an annual rate of 2.54 percent on October 18, 1994. The Plans did not pay any commissions or other expenses with respect to the transactions.

The Bank states that it engaged in the transaction on behalf of the Plans for the following reasons: (i) the purchase of the Merrill Lynch CDs by the Holding Company provided the Plans with full access to the total face value of the CDs, without any withdrawal penalty, and avoided the investment loss which would have occurred from a sale of the CDs on the open market; (ii) as a result of the transaction, the Plans had the funds immediately available for either reinvestment at the current higher market interest rates or for distribution to the Plan participants and beneficiaries, as appropriate; (iii) the interest rate of 5.00 percent per annum paid on the CDs by the Holding Company was significantly higher than the effective interest rate of 2.54 percent per annum being paid on the CDs at the time of the transaction; and (iv) since the Merrill Lynch CDs could not be redeemed prior to maturity, such CDs became effectively an illiquid

given the scope of such fiduciary's investment duties, the fiduciary knows or should know are relevant to the particular investment or investment course of action involved, including the plan's potential exposure to losses and the role the investment or investment course of action plays in that portion of the plan's investment portfolio with respect to which the fiduciary has investment duties (see 29 CFR 2550.404a–1). The Department also notes that in order to act prudently in making such investment decisions, a plan fiduciary must consider, among other factors, the availability, risks and potential return of alternative investments for the plan. Thus, a particular investment by a plan, which is selected in preference to other alternative investments, would generally not be prudent if such investment involves a greater risk to the security of a plan's assets than comparable investments offering a similar return or result.

[15] In this regard, the applicant states that the six-month LIBOR rate was 3.375 percent on October 18, 1993, the date on which the Merrill Lynch CDs were acquired, and 6.9375 percent on December 13, 1994, prior to the sale of such CDs to the Holding Company discussed herein. The interest paid originally on the Merrill Lynch CDs was 5.00 percent as of October 18, 1993, and 2.54 percent as of December 13, 1994.

investment which was unsuitable for the Plans.

Certain Fixed Rate CDs

8. On various dates prior to June 1994, the Bank, in its capacity as a fiduciary of certain Plans, purchased the Fixed Rate CDs through brokerage firms unrelated to the Bank and its affiliates. The Bank states that these brokerage firms did not provide any investment advice as a fiduciary regarding the investments made by the Bank in the Fixed Rate CDs for the Plans. There were approximately forty-three (43) different Fixed Rate CDs held by such Plans as of December 1994.

There were 18 Plans involved in the purchase of the Fixed Rate CDs by the Bank. Of these 18 Plans, approximately 13 Plans had only one participant covered by the Plan. The Plan with the largest number of participants was the Farragut Ditching Profit Sharing Plan (the Farragut P/S Plan), which had approximately 50 participants and beneficiaries and total assets of $694,803 at the time of the transactions. The Farragut P/S Plan had $196,000 invested in the Fixed Rate CDs, which represented approximately 28 percent of its total assets. The Plan with the largest amount of total assets was the Jayne C. Tilley IRA (the Tilley IRA), which had approximately $989,733 at the time of the transactions. The Plan with the largest investment in the Fixed Rate CDs was also the Tilley IRA, which had such CDs with a face amount of $209,000. This amount represented approximately 21 percent of such Plan's total assets at the time of the transactions.

The percentage of a Plan's total assets represented by investments in the Fixed Rate CDs varied from as little as one (1) percent [e.g. the Dean Cox IRA] to as much as 96 percent [e.g. the National Fuel SEP]. However, most of the Plans had less than 30 percent of their total assets invested in the Fixed Rate CDs.

9. The Fixed Rate CDs were issued by various financial institutions, all of which were unrelated to the Bank and its affiliates. These financial institutions were: (a) First USA Bank, in Wilmington, Delaware; (b) Bluebonnet Savings Bank, FSB, in Dallas, Texas; (c) State Bank of India, in New York, New York; (d) Columbia First Bank, in Arlington, Virginia; (e) Amerifed Bank, FSB, in Joliet, Illinois; (f) Home Savings of America, in Los Angeles, California; (g) FNB Boston, in Boston, Massachusetts; (h) Provident Bank, in Cincinnati, Ohio; (i) Home Federal Bank of Tennessee, FSB, in Knoxville, Tennessee; (j) Investors Thrift and Loan, in Monterey, California; (k) Greenwood Trust Company, in New Castle, Delaware; and (l) Merrill Lynch National Bank, in Salt Lake City, Utah.

The Fixed Rate CDs held by the Plans had a total face value of $1,199,150, with maturity dates ranging from May 1995 to January 1999. The Bank states that the interest rates on these CDs was fixed in each case for the entire length of the CDs. The interest rates paid on the Fixed Rate CDs ranged from 4.80 percent per annum for the CD issued by Amerifed Bank [with a par value of $10,000 and maturity on August 18, 1995] to 6.25 percent per annum for the CD issued by FNB Boston [with a par value of $20,100 and maturity on January 1, 1999]. However, subsequent to the purchase of the Fixed Rate CDs by the Plans, the Bank learned that these CDs could not be redeemed prior to maturity, with or without penalty.

10. The Bank represents that the fair market value of each of the Fixed Rate CDs was below its face value during 1995. The Bank states that the decline in the fair market value of the Fixed Rate CDs was attributable to rising interest rates in the marketplace for comparable fixed income investments of the same duration, as measured by various interest rate indexes at the time.

Therefore, the Bank made a determination that it would be in the best interests of the Plans to sell the Fixed Rate CDs to the Holding Company prior to their maturity to avoid any investment losses which could result to the Plans from a sale of such CDs on the open market.

11. Davenport also appraised each of the Fixed Rate CDs as having a fair market value which was below its face value at the time of the subject transactions in 1995. These valuations ranged from approximately $91.658 per $100 of face value, as of March 14, 1995, for the Fixed Rate CD issued by Greenwood Trust [which pays 5.00 percent per annum and is due to mature on September 28, 1998], to approximately $99.216 per $100 face value, as of April 19, 1995, for the Fixed Rate CD issued First USA Bank [which paid 6.15 percent per annum and matured on May 29, 1995].

Davenport's analysis was based on information from brokerage firms and banks that trade such CDs. Davenport represents that the Fixed Rate CDs are not as liquid as other fixed income securities due to a number of factors including par amount, lack of issuer recognition, limited secondary market, lack of knowledge of the issuers financial strength and their non-rated status. Davenport states that dealers that trade such CDs usually demand yields between 50–70 basis points above the yield for comparable U.S. Treasury securities to account for these factors, despite the U.S. Government guarantee for CDs with face amounts under $100,000. Davenport's analysis estimated that bids for the Fixed Rate CDs would require an average yield of approximately 60 basis points above the yield for comparable U.S. Treasury securities, before deducting approximately $7.50 per $1,000 face amount as an average commission for an open market transaction. Davenport's conclusions regarding the market value of the Fixed Rate CDs supported the Bank's determinations to sell these CDs to the Holding Company.

12. On various dates during 1995, the Holding Company purchased the Fixed Rate CDs from the Plans for cash prior to maturity at their full face value, an amount which was above the fair market value of the CDs at that time as determined by Davenport. The Bank states that these transactions occurred on the following dates: (i) 10 Fixed Rate CDs were sold on March 14, 1995; (ii) one Fixed Rate CD was sold on March 31, 1995; (iii) three Fixed Rate CDs were sold on April 7, 1995; (iv) two Fixed Rate CDs were sold on April 19, 1995; (v) one Fixed Rate CD was sold on April 27, 1995; (vi) three Fixed Rate CDs were sold on May 26, 1995; (vii) four Fixed Rate CDs were sold on June 1, 1995; (viii) three Fixed Rate CDs were sold on June 2, 1995; (ix) one Fixed Rate CD was sold on August 2, 1995; (x) five Fixed Rate CDs were sold on August 7, 1995; (xi) four Fixed Rate CDs were sold on August 8, 1995; and (xii) six Fixed Rate CDs were sold on August 11, 1995. In each case, the Holding Company paid the Plans any accrued but unpaid interest at the stated fixed rate for the CD through the date of purchase. The Plans did not pay any commissions or other expenses with respect to the transactions.

The Bank states that it engaged in these transactions on behalf of the Plans for the following reasons: (i) The purchase of the Fixed Rate CDs by the Holding Company provided the Plans with full access to the total face value of the CDs, without any withdrawal penalty, and avoided the investment loss which would have occurred from a sale of the CDs on the open market; (ii) as a result of the transaction, the Plans had the funds immediately available for either reinvestment at the current higher market interest rates or for distribution to the Plan participants and beneficiaries, as appropriate; and (iii) since the Fixed Rate CDs could not be redeemed prior to maturity, such CDs became effectively illiquid investments which were unsuitable for the Plans.

Additional Fixed Rate CDs

13. On various dates prior to June 1994, the Bank, in its capacity as a fiduciary of certain Plans, purchased the Additional Fixed Rate CDs through brokerage firms unrelated to the Bank and its affiliates. The Bank states that these brokerage firms did not provide the Bank with any investment advice as a fiduciary regarding the investments in the Additional Fixed Rate CDs made for the Plans. There are approximately sixteen (16) different Additional Fixed Rate CDs held by such Plans.

There were 21 Plans involved in the purchase of the Additional Fixed Rate CDs by the Bank. Of these 21 Plans, approximately 16 Plans currently have only one participant covered by the Plan. The Plan with the largest number of participants is the Bandit Lites Profit Sharing Plan (the Bandit Lites P/S Plan), which has approximately 37 participants and beneficiaries. The Bandit Lites P/S Plan has approximately $240,935 in total assets, of which $53,000 or approximately 21 percent of such assets are invested in the Additional Fixed Rate CDs. The Plan with the largest amount of assets is the Douglas G. Slater IRA (the Slater IRA), which has approximately $2,454,803. The Plan with the largest investment in the Additional Fixed Rate CDs is also the Slater IRA, which has such CDs with a face amount of $383,000. This amount represents approximately 15.5 percent of such Plan's total assets.

The percentage of a Plan's total assets represented by investments in the Additional Fixed Rate CDs varies from as little as two (2) percent [e.g. the Donald Campbell SEP–IRA] to as much as 87 percent [e.g. the William Myers IRA]. However, most of the Plans have less than 30 percent of their total assets invested in the Additional Fixed Rate CDs.

14. The Additional Fixed Rate CDs were issued by various financial institutions unrelated to the Bank and its affiliates (see list in Paragraph 9 above). The Additional Fixed Rate CDs held by the Plans have a total face value of $875,150, with maturity dates ranging from June 1996 until January 1999. The Bank states that the interest rates on these CDs are fixed in each case for the entire length of the CDs. The interest rates on the Additional Fixed Rate CDs range from 5.00 percent per annum for the CD issued by Bluebonnet Savings Bank [with a par value of $10,000 and maturity on June 14, 1996] to 5.50 percent per annum for the CD issued by Provident Bank [with a par value of $19,000 and maturity on December 10, 1997].

The Bank represents that at the time the Additional Fixed Rate CDs were purchased, the Bank believed that there was no early withdrawal penalty. However, the Bank states that it subsequently learned that these CDs cannot be redeemed prior to maturity, with or without penalty.

15. The Bank proposes to sell the Additional Fixed Rate CDs to the Holding Company for cash prior to their maturity at an amount equal to the greater of either: (i) The face amount of such CDs, plus accrued interest; or (ii) the fair market value of such CDs, plus accrued interest, as determined by an independent, qualified appraiser at the time of the transaction.

Davenport has provided an opinion as to the market value of the Additional Fixed Rate CDs, as of September 21, 1995. Davenport's valuations for these CDs as of such date ranged from approximately $95.112 per $100 of face value for the Additional Fixed Rate CD issued by Greenwood Trust [which pays 5.00 percent per annum and is due to mature on September 29, 1998], to approximately $98.28 per $100 of face value for the Additional Fixed Rate CD issued by Bluebonnet Savings Bank [which pays 5.00 percent per annum and is due to mature on June 14, 1996].

The Bank states that it wants to engage in the proposed transactions on behalf of the Plans for the following reasons: (i) The purchase of the Additional Fixed Rate CDs by the Holding Company would provide the Plans with full access to the total face value of the CDs, without any withdrawal penalty, and would avoid the possibility of investment losses that may occur in a sale of the CDs on the open market; (ii) as a result of the transaction, the Plans will have the funds immediately available for either reinvestment at any higher market interest rates currently available at the time of the proposed transaction or for distribution to the Plan participants and beneficiaries, as appropriate; and (iii) since the Additional Fixed Rate CDs cannot be redeemed prior to maturity, such CDs are effectively illiquid investments which are unsuitable for the Plans.

Therefore, the Bank believes that it would be in the best interests of the Plans to sell certain of the Additional Fixed Rate CDs to the Holding Company prior to their maturity. The Bank states that the Plans will not pay any commissions or other expenses with respect to the sale.

16. In summary, the Bank represents that the subject transactions satisfy the statutory criteria of section 408(a) of the Act because: (a) Each sale has been and will be a one-time transaction for cash; (b) each Plan has received or will receive an amount which is equal to the greater of (i) the face amount of the CDs owned by the Plan, plus accrued but unpaid interest, at the time of sale, or (ii) the fair market value of the CDs owned by the Plan as determined by an independent, qualified appraiser at the time of the sale; (c) the Plans have not paid and will not pay any commissions or other expenses with respect to the sales of the CDs; (d) the Bank, as trustee of the Plans, has determined and will determine that each sale of the CDs was or will be in the best interests of the Plan and its participants and beneficiaries at the time of the transaction; (e) the Bank has taken and will take all appropriate actions necessary to safeguard the interests of the Plans and their participants and beneficiaries in connection with the transactions; and (f) each Plan has received and will receive a reasonable rate of interest on the CDs during the period of time such CDs were or are held by the Plan.

Notice to Interested Persons

The applicant states that notice of the proposed exemption shall be made by first class mail to the appropriate Plan fiduciaries within fifteen days following the publication of the proposed exemption in the Federal Register. This notice shall include a copy of the notice of proposed exemption as published in the Federal Register and a supplemental statement (see 29 CFR 2570.43(b)(2)) which informs interested persons of their right to comment on and/or request a hearing with respect to the proposed exemption. Comments and requests for a public hearing are due within forty-five days following the publication of the proposed exemption in the Federal Register.

FOR FURTHER INFORMATION CONTACT: Mr. E.F. Williams of the Department, telephone (202) 219–8194. (This is not a toll-free number.)

First Security Group Life Insurance Plan (the Plan) Located in Salt Lake City, Utah

[Application No. L–10178]

Proposed Exemption

The Department is considering granting an exemption under the authority of section 408(a) of the Act and in accordance with the procedures set forth in 29 CFR Part 2570, Subpart B (55 FR 32836, 32847, August 10, 1990). If the exemption is granted, the restrictions of sections 406 (a) and (b) of the Act shall not apply to the reinsurance of risks and the receipt of

premiums therefrom by First Security Life Insurance Company of Arizona (FSLIA) from the insurance contracts sold by Minnesota Mutual Life Insurance Company (MM) or any successor insurance company to MM which is unrelated to First Security Corporation (FSC), to provide life insurance benefits to participants in the Plan, provided the following conditions are met:

(a) FSLIA—

(1) Is a party in interest with respect to the Plan by reason of a stock or partnership affiliation with FSC that is described in section 3(14) (E) or (G) of the Act,

(2) Is licensed to sell insurance or conduct reinsurance operations in at least one of the United States or in the District of Columbia,

(3) Has obtained a Certificate of Authority from the Insurance Commissioner of its domiciliary state which has neither been revoked nor suspended, and

(4)(A) Has undergone an examination by an independent certified public accountant for its last completed taxable year immediately prior to the taxable year of the reinsurance transaction; or

(B) Has undergone a financial examination (within the meaning of the law of its current domiciliary State, Arizona) by the Insurance Commissioner of the State of Arizona within 5 years prior to the end of the year preceding the year in which the reinsurance transaction occurred.

(b) The Plan pays no more than adequate consideration for the insurance contracts;

(c) No commissions are paid with respect to the direct sale of such contracts or the reinsurance thereof; and

(d) For each taxable year of FSLIA, the gross premiums and annuity considerations received in that taxable year by FSLIA for life and health insurance or annuity contracts for all employee benefit plans (and their employers) with respect to which FSLIA is a party in interest by reason of a relationship to such employer described in section 3(14) (E) or (G) of the Act does not exceed 50% of the gross premiums and annuity considerations received for all lines of insurance (whether direct insurance or reinsurance) in that taxable year by FSLIA. For purposes of this condition (d):

(1) the term ''gross premiums and annuity considerations received'' means as to the numerator the total of premiums and annuity considerations received, both for the subject reinsurance transactions as well as for any direct sale or other reinsurance of life insurance, health insurance or annuity contracts to such plans (and their employers) by FSLIA. This total is to be reduced (in both the numerator and the denominator of the fraction) by experience refunds paid or credited in that taxable year by FSLIA.

(2) all premium and annuity considerations written by FSLIA for plans which it alone maintains are to be excluded from both the numerator and the denominator of the fraction.

EFFECTIVE DATE: If the proposed exemption is granted, the exemption will be effective August 1, 1993.

Preamble

On August 7, 1979, the Department published a class exemption [Prohibited Transaction Exemption 79–41 (PTE 79–41), 44 FR 46365] which permits insurance companies that have substantial stock or partnership affiliations with employers establishing or maintaining employee benefit plans to make direct sales of life insurance, health insurance or annuity contracts which fund such plans if certain conditions are satisfied.

In PTE 79–41, the Department stated its views that if a plan purchases an insurance contract from a company that is unrelated to the employer pursuant to an arrangement or understanding, written or oral, under which it is expected that the unrelated company will subsequently reinsure all or part of the risk related to such insurance with an insurance company which is a party in interest with respect to the plan, the purchase of the insurance contract would be a prohibited transaction.

The Department further stated that as of the date of publication of PTE 79–41, it had received several applications for exemption under which a plan or its employer would contract with an unrelated company for insurance, and the unrelated company would, pursuant to an arrangement or understanding, reinsure part or all of the risk with (and cede part or all of the premiums to) an insurance company affiliated with the employer maintaining the plan. The Department felt that it would not be appropriate to cover the various types of reinsurance transactions for which it had received applications within the scope of the class exemption, but would instead consider such applications on the merits of each individual case.

Summary of Facts and Representations

1. FSC is incorporated under the laws of the State of Delaware and is a regional bank holding company with banking subsidiaries in six western states. In addition, it has ten other subsidiaries, including a leasing company, a mortgage company, a life insurance company (FSLIA), an insurance agency company, a discount securities brokerage company, two financial services companies, and two companies providing technical and logistical services to other FSC subsidiaries.

2. FSLIA is a corporation organized under the laws of Arizona with its principal administrative offices in Salt Lake City, Utah. FSLIA was originally organized in Texas in August, 1954 and operated as a life insurance company domiciled in that State until 1991. On December 20, 1991, FSLIA moved its corporate domicile from Texas to Arizona. FSLIA has always been a wholly owned subsidiary of FSC and is currently licensed to underwrite life insurance business in Arizona. FSLIA is primarily engaged in the businesses of: (i) Fully underwriting credit life and disability insurance indirectly to the general public through an unrelated insurance underwriter; and (ii) reinsurance of credit life and disability policies sold by other insurance companies.

3. The Plan is sponsored by FSC and most of its subsidiaries. The Plan is composed of two parts, the First Security Basic Group Term Life Insurance Plan, and the First Security Add-on Group Life Insurance Plan (which provides both optional add-on employee coverage and optional dependent coverage. It is a welfare benefit plan providing life insurance on the lives of all employees who are regularly scheduled to work 25 hours per week, as well as add-on life insurance on the lives of such employees and life insurance on the lives of the dependents of such employees who voluntarily elect to have and pay for the coverage. The Basic Term Life Insurance Plan had 7,044 participants as of September 30, 1995, and the Add-on Group Life Insurance Plan had 3,333 participants with coverage on their own lives and 2,698 participants with dependent coverage as of that date. Premiums for basic coverage are paid for by the employers, while premiums for add-on and dependent insurance are wholly paid for by the employees through payroll deduction. The premiums are transferred twice monthly to a VEBA, from which they are remitted monthly to the direct insurer.

4. The life insurance is currently underwritten by MM, an unaffiliated insurance carrier. The life insurance benefits under the Plan are provided by MM and reinsured on a 50% basis by FSLIA, i.e., FSLIA receives 50% of the premiums paid and pays 50% of the claims under the MM policy. The

reinsurance contract between FSLIA and MM was entered into effective August 1, 1993, and was actually implemented in stages between that date and December 31, 1993. The applicants have requested that this proposed exemption apply to any successor company to MM that is also unrelated to FSC should FSC decide to insure this life insurance coverage with another carrier under the same kind of arrangement.

5. The applicants represent that the subject transaction has not and will not in any way affect the cost to the insureds of the group life insurance contracts, and the Plan has paid and will pay no more than adequate consideration for the insurance. Also, Plan participants are afforded insurance protection from MM, one of the largest and most experienced group insurers in the United States, at competitive rates arrived at through arm's-length negotiations. MM is rated A++ by the A.W. Best Company, whose insurance ratings are widely used in financial and regulatory circles. MM has assets in excess of $8.5 billion and reserves set aside for group life and accident and health policies of nearly $346 million. MM will continue to have the ultimate responsibility in the event of loss to pay insurance benefits to the employee's beneficiary.[16] The applicants represent that FSLIA is a sound, viable company which does a substantial amount of business outside its affiliated group of companies. FSLIA is substantially dependent upon insurance customers that are unrelated to itself and its affiliates for premium revenue.

6. The applicants represent that the subject reinsurance transaction has met and will continue to meet all of the conditions of PTE 79–41 covering direct insurance transactions:

(a) FSLIA is a party in interest with respect to the Plan (within the meaning of section 3(14)(G) of the Act) by reason of stock affiliation with FSC, which maintains the Plan.

(b) FSLIA is licensed to do business in Arizona;

(c) FSLIA has been audited by the independent certified public accounting firm of Deloitte & Touche for each of its fiscal years since 1992 and has therefore undergone such an examination for each completed taxable year of the reinsurance transaction.

(d) FSLIA has received Certificates of Authority from its respective domiciliary states (first Texas, then Arizona) which have been audited or reviewed annually since its organization and which have neither been revoked nor suspended.

(e) The Plan has paid and will pay no more than adequate consideration for the insurance. The subject transaction has not and will not in any way affect the cost to the insureds of the group life insurance transaction.

(f) No commissions have been or will be paid with respect to the direct insurance or the reinsurance agreements between MM (or any successor thereto) and FSC and FSLIA.

(g) For each taxable year of FSLIA, the ''gross premiums and annuity considerations received'' in that taxable year for group life and health insurance (both direct insurance and reinsurance) for all employee benefit plans (and their employers) with respect to which FSLIA is a party in interest by reason of a relationship to such employer described in section 3(14)(E) or (G) of the Act have not exceeded and will not exceed 50% of the ''gross premiums and annuity considerations received'' by FSLIA from all lines of insurance in that taxable year. Most of the premium income of FSLIA comes from reinsurance, but some is credit life insurance written on a direct basis. FSLIA is principally in the business of reinsurance. The applicants represent that the premiums for the Plan insurance have never exceeded 18.8% of FSLIA's total premiums. In 1995, the premium income of FSLIA came from the following sources in the following amounts:

(1) MM reinsurance on the subject Plan group policy: $559,209.

(2) Reinsurance of credit life insurance sold to individual customers of FSC group—

(A) American Bankers Credit reinsurance: $1,463,747

(B) Central States of Omaha Visa Credit reinsurance: $807,049

(C) Balboa Credit reinsurance on commercial loans: $154,000.

Thus, more than 81% of FSLIA's premiums for 1995 were derived from insurance (or reinsurance thereon) sold to entities other than FSC and its affiliated group.

7. In summary, the applicants represent that the subject transaction has met and will continue to meet the criteria of section 408(a) of the Act because: a) Plan participants and beneficiaries are afforded insurance protection by MM, one of the largest and most experienced group insurers in the United States, at competitive market rates arrived at through arm's-length negotiations; b) FSLIA is a sound, viable insurance company which does a substantial amount of public business outside its affiliated group of companies; and c) each of the protections provided to the Plan and its participants and beneficiaries by PTE 79–41 has been and will continue to be met under the subject reinsurance transaction.

FOR FURTHER INFORMATION CONTACT: Gary H. Lefkowitz of the Department, telephone (202) 219–8881. (This is not a toll-free number.)

Chicago Trust Company (Chicago Trust) Located in Chicago, IL

[Application No. D–10222]

Proposed Exemption

Based on the facts and representations set forth in the application, the Department is considering granting an exemption under the authority of section 408(a) of the Act and section 4975(c)(2) of the Code and in accordance with the procedures set forth in 29 CFR Part 2570, Subpart B (55 FR 32836, 32847, August 10, 1990).[17]

Section I. Exemption for the In-Kind Transfer of Assets

If the exemption is granted, the restrictions of section 406(a) and section 406(b) of the Act and the sanctions resulting from the application of section 4975 of the Code by reason of section 4975(c)(1) (A) through (F) shall not apply, effective September 21, 1995, to the in-kind transfer to any diversified open-end investment company (the Fund or Funds) registered under the Investment Company Act of 1940 (the '40 Act) to which Chicago Trust or any of its affiliates (collectively, Chicago Trust) serves as investment adviser and/or may provide other services, of the assets of various employee benefit plans (the Client Plans), including plans established or maintained by Chicago Trust (the In-House Plans; collectively, the Plans) that are either held in certain collective investment funds (the CIF or CIFs) maintained by Chicago Trust as trustee, investment manager, in exchange for shares of such Funds, provided that the following conditions are met:

(a) A fiduciary (the Second Fiduciary) who is acting on behalf of each affected In-House Plan or Client Plan and who is independent of and unrelated to Chicago Trust, as defined in paragraph (h) of Section III below, receives advance written notice of the in-kind transfer of assets of the CIFs in exchange

[16] The applicants represent that any successor to MM would be a legal reserve life insurance company with assets of not less than $500,000,000, and thus be of such a size as to afford similar protection and responsibility.

[17] For purposes of this proposed exemption, reference to provisions of Title I of the Act, unless otherwise specified, refer also to the corresponding provisions of the Code.

for shares of the Funds and the disclosures described in paragraph (f) of Section II below.

(b) On the basis of the information described in paragraph (f) of Section II below, the Second Fiduciary authorizes in writing the in-kind transfer of assets of an In- House Plan or a Client Plan in exchange for shares of the Funds, the investment of such assets in corresponding portfolios of the Funds, and, in the case of a Client Plan, the fees received by Chicago Trust pursuant to its investment advisory agreement with the Funds. Such authorization by the Second Fiduciary is to be consistent with the responsibilities, obligations and duties imposed on fiduciaries by Part 4 of Title I of the Act.

(c) No sales commissions or redemption fees are paid by an In-House Plan or a Client Plan in connection with the in-kind transfers of assets of the CIFs in exchange for shares of the Funds.

(d) All or a *pro rata* portion of the assets of an In-House Plan or a Client Plan held in the CIFs are transferred in-kind to the Funds in exchange for shares of such Funds. A Plan not electing to participate in the Funds receives a cash payment representing a *pro rata* portion of the assets of the terminating CIF before the final liquidation takes place.

(e) The CIFs receive shares of the Funds that have a total net asset value equal in value to the assets of the CIFs exchanged for such shares on the date of transfer.

(f) The current value of the assets of the CIFs to be transferred in-kind in exchange for shares is determined in a single valuation performed in the same manner and at the close of business on the same day, using independent sources in accordance with the procedures set forth in Rule 17a–7(b) (Rule 17a–7) under the '40 Act, as amended from time to time or any successor rule, regulation, or similar pronouncement and the procedures established pursuant to Rule 17a–7 for the valuation of such assets. Such procedures must require that all securities for which a current market price cannot be obtained by reference to the last sale price for transactions reported on a recognized securities exchange or NASDAQ be valued based on an average of the highest current independent bid and lowest current independent offer, as of the close of business on the Friday preceding the weekend of the CIF transfers determined on the basis of reasonable inquiry from at least three sources that are broker-dealers or pricing services independent of Chicago Trust.

(g) Not later than 30 days after completion of each in-kind transfer of assets of the CIFs in exchange for shares of the Funds, Chicago Trust sends by regular mail to the Second Fiduciary, who is acting on behalf of each affected Plan and who is independent of and unrelated to Chicago Trust, as defined in paragraph (h) of Section III below, a written confirmation that contains the following information:

(1) The identity of each of the assets that was valued for purposes of the transaction in accordance with Rule 17a–7(b)(4) under the '40 Act;

(2) The price of each such assets for purposes of the transaction; and

(3) The identity of each pricing service or market maker consulted in determining the value of such assets.

(h) Not later than 90 days after completion of each in-kind transfer of assets of the CIFs in exchange for shares of the Funds, Chicago Trust sends by regular mail to the Second Fiduciary, who is acting on behalf of each affected In-House Plan or Client Plan and who is independent of and unrelated to Chicago Trust, as defined in paragraph (h) of Section III below, a written confirmation that contains the following information:

(1) The number of CIF units held by each affected Plan immediately before the in-kind transfer (and the related per unit value and the aggregate dollar value of the units transferred); and

(2) The number of shares in the Funds that are held by each affected Plan following the conversion (and the related per share net asset value and the aggregate dollar value of the shares received).

(i) The conditions set forth in paragraphs (c), (d), (e), (p) and (q) of Section II below as they would relate to all Plans are satisfied.

Section II. Exemption for the Receipt of Fees From Funds

If the exemption is granted, the restrictions of section 406(a) and section 406(b) of the Act and the sanctions resulting from the application of section 4975 of the Code, by reason of section 4975(c)(1)(A) through (F) of the Code shall not apply, effective September 21, 1995, to (1) the receipt of fees by Chicago Trust from the Funds for investment advisory services to the Funds; and (2) the receipt or retention of fees by Chicago Trust from the Funds for acting as custodian or shareholder servicing agent to the Funds, as well as any other services provided to the Funds which are not investment advisory services (i.e., the Secondary Services), in connection with the investment of shares in the Funds by the Client Plans for which Chicago Trust acts as a fiduciary, provided that—

(a) No sales commissions are paid by the Client Plans in connection with purchases or sales of shares of the Funds and no redemption fees are paid in connection with the redemption of such shares by the Client Plans to the Funds.

(b) The price paid or received by the Client Plans for shares in the Funds is the net asset value per share, as defined in paragraph (e) of Section III, at the time of the transaction and is the same price which would have been paid or received for the shares by any other investor at that time.

(c) Chicago Trust, any of its affiliates or their officers or directors do not purchase from or sell to any of the Client Plans shares of any of the Funds.

(d) For each Client Plan, the combined total of all fees received by Chicago Trust for the provision of services to such Plan, and in connection with the provision of services to any of the Funds in which the Client Plans may invest, is not in excess of ''reasonable compensation'' within the meaning of section 408(b)(2) of the Act.

(e) Chicago Trust does not receive any fees payable, pursuant to Rule 12b-1 (the 12b-1 Fees) under the '40 Act in connection with the transactions involving the Funds.

(f) A Second Fiduciary who is acting on behalf of a Client Plan and who is independent of and unrelated to Chicago Trust, as defined in paragraph (h) of Section III below, receives in advance of the investment by a Client Plan in any of the Funds a full and detailed written disclosure of information concerning such Fund including, but not limited to—

(1) A current prospectus for each portfolio of each of the Funds in which such Client Plan is considering investing;

(2) A statement describing the fees for investment advisory or other similar services, any fees for Secondary Services, as defined in paragraph (i) of Section III below, and all other fees to be charged to or paid by the Client Plan and by such Funds to Chicago Trust, including the nature and extent of any differential between the rates of such fees;

(3) The reasons why Chicago Trust may consider such investment to be appropriate for the Client Plan;

(4) A statement describing whether there are any limitations applicable to Chicago Trust with respect to which assets of a Client Plan may be invested in the Funds, and, if so, the nature of such limitations;

(5) A copy of the proposed exemption and/or a copy of the final exemption, if

granted, upon the request of the Second Fiduciary; and

(6) The last date as of which consent to an in-kind transfer may be given by the Second Fiduciary, along with the disclosure that if consent is not given by that date, the Second Fiduciary will be deemed to have withheld consent to an in-kind transfer.

(g) On the basis of the information described in paragraph (f) of this Section II, the Second Fiduciary authorizes in writing—

(1) The investment of assets of the Client Plan in shares of the Fund, in connection with the transaction set forth in Section II;

(2) The Funds in which the assets of the Client Plan may be invested; and

(3) The fees received by Chicago Trust in connection with investment advisory services and Secondary Services provided to the Funds; such authorization by the Second Fiduciary to be consistent with the responsibilities obligations, and duties imposed on fiduciaries by Part 4 of Title I of the Act.

(h) The authorization, described in paragraph (g) of this Section II, is terminable at will by the Second Fiduciary of a Client Plan, without penalty to such Client Plan. Such termination will be effected by Chicago Trust selling the shares of the Funds held by the affected Client Plan within one business day following receipt by Chicago Trust, either by mail, hand delivery, facsimile, or other available means at the option of the Second Fiduciary, of written notice of termination (the Termination Form), as defined in paragraph (i) of Section III below; provided that if, due to circumstances beyond the control of Chicago Trust, the sale cannot be executed within one business day, Chicago Trust shall have one additional business day to complete such sale.

(i) The Client Plans do not pay any Plan-level investment advisory fees to Chicago Trust with respect to any of the assets of such Client Plans which are invested in shares of the Funds. This condition does not preclude the payment of investment advisory fees by the Funds to Chicago Trust under the terms of an investment advisory agreement adopted in accordance with section 15 of the '40 Act or other agreement between Chicago Trust and the Funds or the retention by Chicago Trust of fees for Secondary Services paid to Chicago Trust by the Funds.

(j) In the event of an increase in the rate of any fees paid by the Funds to Chicago Trust regarding investment advisory services that Chicago Trust provides to the Funds over an existing rate for such services that had been authorized by a Second Fiduciary of a Client Plan, in accordance with paragraph (g) of this Section II, Chicago Trust will, at least 30 days in advance of the implementation of such increase, provide a written notice (which may take the form of a proxy statement, letter, or similar communication that is separate from the prospectus of the Fund and which explains the nature and amount of the increase in fees) to the Second Fiduciary of each Client Plan invested in a Fund which is increasing such fees. Such notice shall be accompanied by the Termination Form, as defined in paragraph (j) of Section III below;

(k) In the event of an (1) addition of a Secondary Service, as defined in paragraph (h) of Section III below, provided by Chicago Trust to the Funds for which a fee is charged or (2) an increase in the rate of any fee paid by the Funds to Chicago Trust for any Secondary Service that results either from an increase in the rate of such fee or from the decrease in the number or kind of services performed by Chicago Trust for such fee over an existing rate for such Secondary Service which had been authorized by the Secondary Fiduciary in accordance with paragraph (g) of this Section II, Chicago Trust will, at least 30 days in advance of the implementation of such Secondary Service or fee increase, provide a written notice (which may take the form of a proxy statement, letter, or similar communication that is separate from the prospectus of the Funds and which explains the nature and amount of the additional Secondary Service for which a fee is charged or the nature and amount of the increase in fees) to the Second Fiduciary of each of the Client Plans invested in a Fund which is adding a service or increasing fees. Such notice shall be accompanied by the Termination Form, as defined in paragraph (j) of Section III below.

(l) The Second Fiduciary is supplied with a Termination Form at the times specified in paragraphs (j) and (k) of this Section II, which expressly provides an election to terminate the authorization, described above in paragraph (g) of this Section II, with instructions regarding the use of such Termination Form including statements that—

(1) The authorization is terminable at will by any of the Client Plans, without penalty to such Plans. The termination will be effected by Chicago Trust selling the shares of the Funds held by the Client Plans requesting termination within the period of time specified by the Client Plan, but not later than one business day following receipt by Chicago Trust from the Second Fiduciary of the Termination Form or any written notice of termination; provided that if, due to circumstances beyond the control of Chicago Trust, the sale of shares of such Client Plan cannot be executed within one business day, Chicago Trust shall have one additional business day to complete such sale; and

(2) Failure by the Second Fiduciary to return the Termination Form on behalf of the Client Plan will be deemed to be an approval of the additional Secondary Service for which a fee is charged or increase in the rate of any fees and will result in the continuation of the authorization, as described in paragraph (g) of this Section II, of Chicago Trust to engage in the transactions on behalf of the Client Plan;

(m) The Second Fiduciary is supplied with a Termination Form at least once in each calendar year, beginning with the calendar year that begins after the grant of this proposed exemption is published in the Federal Register and continuing for each calendar year thereafter; provided that the Termination Form need not be supplied to the Second Fiduciary, pursuant to this paragraph, sooner than six months after such Termination Form is supplied pursuant to paragraphs (j) and (k) of this Section II, except to the extent required by said paragraphs (j) and (k) of this Section II to disclose an additional Secondary Service for which a fee is charged or an increase in fees;

(n)(1) With respect to each of the Funds in which a Client Plan invests, Chicago Trust will provide the Second Fiduciary of such Plan—

(A) At least annually with a copy of an updated prospectus of such Fund;

(B) A report or statement (which may take the form of the most recent financial report, the current statement of additional information, or some other written statement) which contains a description of all fees paid by the Fund to Chicago Trust within 15 days of such document's availability; and

(2) With respect to each of the Funds in which a Client Plan invests, in the event such Fund places brokerage transactions with Chicago Trust or any adviser or sub-adviser to a Fund or any of their affiliates (collectively, Related Party Brokerage), Chicago Trust will provide the Second Fiduciary of such Client Plan at least annually with a statement specifying—

(A) The total, expressed in dollars, attributable to each Fund's investment portfolio which represent Related Party Brokerage;

(B) The total, expressed in dollars, of brokerage commissions attributable to each Fund's investment portfolio other than Related Party Brokerage;

(C) The average brokerage commissions per share, expressed as cents per share, paid for Related Party Brokerage by each Fund; and

(D) The average brokerage commissions per share, expressed as cents per share, paid by each Fund for brokerage other than Related Party Brokerage.

(o) All dealings between the Client Plans and any of the Funds are on a basis no less favorable to such Client Plans than dealings between the Funds and other shareholders holding the same class of shares as the Client Plans.

(p) Chicago Trust maintains for a period of 6 years the records necessary to enable the persons, as described in paragraph (q) of Section II below, to determine whether the conditions of this proposed exemption have been met, except that—

(1) A prohibited transaction will not be considered to have occurred if, due to circumstances beyond the control of Chicago Trust, the records are lost or destroyed prior to the end of the 6 year period; and

(2) No party in interest, other than Chicago Trust, shall be subject to the civil penalty that may be assessed under section 502(i) of the Act, or to the taxes imposed by section 4975(a) and (b) of the Code, if the records are not maintained, or are not available for examination as required by paragraph (q) of Section II below.

(q)(1) Except as provided in paragraph (q)(2) of this Section II and notwithstanding any provisions of subsection (a)(2) and (b) of section 504 of the Act, the records referred to in paragraph (p) of Section II above are unconditionally available at their customary location for examination during normal business hours by—

(A) Any duly authorized employee or representative of the Department, the Internal Revenue Service (the Service) or the Securities and Exchange Commission (the SEC);

(B) Any fiduciary of each of the Client Plans who has authority to acquire or dispose of shares of any of the Funds owned by such Client Plan, or any duly authorized employee or representative of such fiduciary; and

(C) Any participant or beneficiary of the Plans or duly authorized employee or representative of such participant or beneficiary.

(2) None of the persons described in paragraph (q)(1)(B) and (q)(1)(C) of Section II shall be authorized to examine trade secrets of Chicago Trust, or commercial or financial information which is privileged or confidential.

Section III. Definitions

For purposes of this proposed exemption,

(a) The term ''Chicago Trust'' means Chicago Trust Company and any affiliate of Chicago Trust, as defined in paragraph (b) of this Section III.

(b) An ''affiliate'' of a person includes:

(1) Any person directly or indirectly through one or more intermediaries, controlling, controlled by, or under common control with the person;

(2) Any officer, director, employee, relative, or partner in any such person; and

(3) Any corporation or partnership of which such person is an officer, director, partner, or employee.

(c) The term ''control'' means the power to exercise a controlling influence over the management or policies of a person other than an individual;

(d) The terms ''Fund or Funds'' mean any diversified open-end investment company or companies registered under the '40 Act for which Chicago Trust serves as investment adviser and may also provide custodial or other services such as Secondary Services as approved by such Funds.

(e) The term ''net asset value'' means the amount for purposes of pricing all purchases and sales calculated by dividing the value of all securities, determined by a method as set forth in a Fund's prospectus and statement of additional information, and other assets belonging to each of the portfolios in such Fund, less the liabilities charged to each portfolio, by the number of outstanding shares.

(f) The term ''Plan'' means any ''employee benefit pension plan'' within the meaning of section 3(2) of the Act or any ''plan'' within the meaning of section 4975(e)(1) of the Code. The term ''Plan'' includes any plan maintained by an entity other than Chicago Trust (referred to collectively herein as the ''Client Plans'') and any of the following Plans sponsored or maintained by Chicago Trust (referred to collectively as the ''In-House Plans''): the Chicago Trust Pension Plan, the Chicago Trust Savings and Profit Sharing Plan, the Celite Employees' Thrift Plan, the Celite Hourly Retirement Savings 401(k) Plan, the Celite Employees' Retirement Plan and the Heads & Threads Savings and Profit Sharing Plan.

(g) The term ''relative'' means a ''relative'' as that term is defined in section 3(15) of the Act (or a ''member of the family'' as that term is defined in section 4975(e)(6) of the Code), or a brother, a sister, or a spouse of a brother or a sister.

(h) The term ''Second Fiduciary'' means a fiduciary of a plan who is independent of and unrelated to Chicago Trust. For purposes of this exemption, the Second Fiduciary will not be deemed to be independent of and unrelated to Chicago Trust if—

(1) Such Second Fiduciary directly or indirectly controls is controlled by or is under common control with Chicago Trust;

(2) Such Second Fiduciary, or any officer, director, partner, employee or relative of such Second Fiduciary is an officer, director, partner or employee of Chicago Trust (or is a relative of such persons); and

(3) Such Second Fiduciary directly or indirectly receives any compensation or other consideration in connection with any transaction described in this exemption; provided, however, that nothing shall prevent a Second Fiduciary's receipt of its customary fees from a Plan or the Plan's sponsoring employer for serving as a fiduciary to such Plan.

If an officer, director, partner, or employee of Chicago Trust (or a relative of such persons), is a director of such Second Fiduciary, and if he or she abstains from participation in the choice of the Plan's investment manager/adviser, the approval of any purchase or sale by the Plan of shares of the Funds, and the approval of any change of fees charged to or paid by the Plan, in connection with any of the transactions described in Sections I and II above, then paragraph (h)(2) of Section III above, shall not apply.

(i) The term ''Secondary Service'' means a service, other than an investment advisory or similar service, which is provided by Chicago Trust to the Funds, including but not limited to custodial, accounting, brokerage, administrative, or any other service.

(j) The term ''Termination Form'' means the form supplied to the Second Fiduciary of a Client Plan, at the times specified in paragraphs (j), (k), and (m) of Section II above, which expressly provides an election to the Second Fiduciary to terminate on behalf of the Plans the authorization, described in paragraph (g) of Section II. Such Termination Form is to be used at will by the Second Fiduciary to terminate such authorization without penalty to the Client Plan and to notify Chicago Trust in writing to effect such termination not later than one business day following receipt by Chicago Trust of written notice of such request for termination; provided that if, due to circumstances beyond the control of Chicago Trust, the sale cannot be executed within one business day,

Chicago Trust shall have one additional business day to complete such sale.

EFFECTIVE DATE: If granted, this proposed exemption will be effective as of September 21, 1995.

Summary of Facts and Representations

Description of the Parties

1. The parties or entities involved in the subject transactions are described as follows:

(a) *Chicago Trust,* a trust company chartered under the laws of the State of Illinois, maintains its principal office at 171 North Clark Street, Chicago, Illinois. Chicago Trust is a wholly owned subsidiary of the Allegheny Corporation (Allegheny) whose principal place of business is at Park Avenue Plaza, New York, NY. As of December 31, 1995, Chicago Trust had approximately $6 billion in consolidated assets and it engages in two principal lines of business, directly or through subsidiaries. In this regard, Chicago Trust is the largest real estate title insurer in the world. In addition, Chicago Trust provides trustee, investment management and related services, primarily to high net worth individuals, families, tax-qualified pension and profit sharing plans (including plans subject to provisions of the Act), individual retirement accounts and insurance companies. As of December 31, 1995, Chicago Trust managed approximately $1.3 billion of client assets.

(b) *The Client Plans* consist of 351 separate employee benefit plan clients of Chicago Trust.[18] Of those Client Plans, 239 are employee pension benefit plans as defined in section 3(2) of the Act or Plans covering only partners or proprietors and their spouses, as described in 29 CFR 2510.3–3 (b) and (c). The Client Plans also consist of 112 individual retirement accounts With respect to the Client Plans, Chicago Trust may serve as trustee, either with or without investment discretion, or as an ''investment manager'' within the meaning of section 3(38) of the Act. Chicago Trust may also provide ''Plan-level'' administrative services to the Client Plans that include maintaining custody of Plan assets, maintaining Plan records, preparing periodic reports of Plan assets and participant accounts, effecting participant investment directions, processing participant loans and accounting for contributions, payment of benefits and other receipts and distributions. Chicago Trust does not have any ownership in or common ownership with any broker-dealer.

Chicago Trust is compensated for its Plan-level investment management services according to a percentage of assets under management formula. Its fees for Plan-level administrative services are separately negotiated with each Client Plan for which such services are performed.

(c) *The In-House Plans* consist of various plans that are sponsored by Chicago Trust and its affiliates. In this regard, Chicago Trust is the sponsoring employer of the Chicago Trust Company Pension Plan and the Chicago Trust Company Savings and Profit Sharing Plan (collectively, the Chicago Trust Plans). Celite Corporation, a third-tier subsidiary of Allegheny, is the sponsoring employer of the Celite Employees Thrift Plan, the Celite Hourly Retirement Savings 401(k) Plan, the Celite Hourly Retirement Plan and the Celite Employees Retirement Plan (collectively, the Celite Plans). Heads and Threads, a division of Allegheny, is the sponsoring employer of the Heads and Threads Profit Sharing and Savings Plan (the Heads and Threads Plan). Each of these plans is an ''employee pension benefit plan within the meaning of section 3(2) of the Act. Collectively, the Chicago Trust Plans, the Celite Plans and the Heads and Threads Plan are referred to herein as the ''In-House Plans.'' The following table shows the participant breakdowns and asset totals for the In-House Plans as of December 31, 1995.

Plans	No. participants	Total assets
Chicago Trust:		
Pension	10,880	$86,639,464
Savings and Profit Sharing	6,938	222,865,196
Celite:		
Employees Thrift	204	10,702,672
Hourly Ret. Savings	257	2,385,675
Hourly Retirement	326	7,747,333
Employees Retirement	275	10,308,572
Heads & Threads:		
Profit Sharing and Savings	196	11,800,983

Chicago Trust is trustee for each In-House Plan and also performs, at the Plan-level, related services for each In-House Plan. These services include maintaining custody of plan assets, maintaining plan records, preparing periodic reports of plan assets and participant accounts, effecting participant investment directions, processing participant loans and accounting for contributions, payments of benefits and other receipts and distributions. Chicago Trust's compensation from the In-House Plans for the performance of these Plan-level services is limited to the reimbursement of direct expenses.

(d) *The CIFs,* which are maintained pursuant to several declarations of trust, are the primary investment vehicles used by Chicago Trust in its investment management of plan assets of the In-House Plans and the Client Plans. The Chicago Trust Company Investment Trust for Employee Benefit Plans (the Investment Trust), which was created by a Declaration of Trust dated January 17, 1968 and restated several times, most recently as of January 31, 1994, is organized as a group trust within the meaning of Revenue Ruling 81–100, 1981–1 CB 326. The Investment Trust formerly included the assets of the Balanced Fund, the Core Equity Fund and the Fixed Income Fund, three CIFs which were terminated on September 21, 1995. The Investment Trust presently holds the assets of the Capital Appreciation Fund, the Growth Fund, the Index Fund, the International Equity Fund and the US Government Fund.

Chicago Trust also utilizes its Safety of Principal Fund in the management of employee benefit plan assets. The Safety of Principal Fund is a vehicle which is permitted to invest in stated return contracts, certificates of deposit, institutional money market funds and certain other obligations. It is maintained pursuant to a declaration of trust dated April 24, 1985, titled the ''Chicago Trust Stated Principal Value Investment Trust for Employee Benefit Plans,'' and is organized as a ''group trust'' within the meaning of Revenue Ruling 81–100, 1981–1 CB 326.

Until it was terminated on September 21, 1995, Chicago Trust utilized its Short Term Investment Fund in the management of employee benefit plan assets. The Short Term Investment Fund was a money-market vehicle which was maintained pursuant to a declaration of trust dated July 22, 1981, titled the ''Chicago Trust Company Short Term Investment Fund for Employee Benefit Plans'' which established the Short Term Investment Fund as a ''group trust'' within the meaning of Revenue Ruling 81–100, 1981–1 CB 326.

Under section 3.02 of the respective Declarations of Trust which established the Investment Trust, the Safety of Principal Fund and the Short Term Investment Fund, Chicago Trust has had exclusive management and control of the assets of the CIFs. Chicago Trust has

[18] Although the Client Plans may also include participant-directed plans subject to the provisions of section 404(c) of the Act, the Department is not providing, nor is the applicant requesting, exemptive relief for such Client Plans to the extent such transactions are covered under section 404(c) of the Act.

charged no fee for its investment advisory services to these CIFs, but it has received reimbursement for its expenses. No CIF has imposed a minimum investment or maximum limit on investments in it by an In-House Plan or a Client Plan.

(e) *The Funds* constitute a Delaware business trust organized on September 10, 1993 and registered as an open-end, management investment company under the provisions of the '40 Act. The Funds are managed by a Board of Trustees, a majority of whose members are persons independent of Chicago Trust. At present, the Funds offer seven separate, diversified series of shares of mutual fund portfolios. They are the Chicago Trust Growth & Income Fund, the Chicago Trust Intermediate Fixed Income Fund, the Chicago Trust Intermediate Municipal Bond Fund, the Chicago Trust Money Market Fund, the Montag & Caldwell Growth Fund, the Montag & Caldwell Balanced Fund and the Chicago Trust Talon Fund.

Each Fund comprising the Funds is subject to a separate advisory agreement and pays an investment advisory fee to its respective investment adviser. Chicago Trust is the investment adviser to the Chicago Trust Growth & Income Fund, the Chicago Trust Intermediate Fixed Income Fund, the Chicago Trust Intermediate Municipal Bond Fund and the Chicago Trust Money Market Fund and it receives investment advisory fees, respectively, of 0.70 percent, 0.55 percent, 0.60 percent and 0.40 percent of average daily net assets. Montag & Caldwell, a registered investment adviser which is a wholly-owned subsidiary of Chicago Trust, is the investment adviser to the Montag & Caldwell Growth Fund and the Montag & Caldwell Balanced Fund. For services rendered, Montag & Caldwell receives investment advisory fees of 0.80 percent and 0.75 percent of average daily net assets from the Growth Fund and Balanced Fund.

In addition, Chicago Trust is the investment adviser to the Chicago Trust Talon Fund and it receives an investment advisory fee of 0.80 percent of average daily net assets from this Fund. Pursuant to a sub-advisory agreement, Chicago Trust pays, out of its investment advisory fee, a subadvisory fee to Talon Asset Management, Inc. (Talon), an unrelated investment adviser, to manage this Fund, subject to Chicago Trust's supervision. Talon's subadvisory fee ranges from 0.40 percent to 0.75 percent of daily net assets.

The Funds maintain a written ''distribution and services plan'' pursuant to Rule 12b–1 of the '40 Act. Under the plan of distribution, each Fund (other than the Chicago Trust Money Market Fund) can charge a fee of 0.25 percent of average daily net assets. This fee is paid by the Chicago Trust Funds to parties other than Chicago Trust or its affiliates to finance activities that will result in the marketing or distribution of shares of the Funds.

The minimum investment for an In-House Plan or a Client Plan in a Fund is $1,000 for the Chicago Trust Money Market Fund and $500 for each other Fund. No Fund imposes a maximum limit on investments in it by a Client Plan or an In-House Plan.

(f) *Cole Taylor Bank of Chicago, Illinois (Cole Taylor)* has been retained by Chicago Trust to serve as the Second Fiduciary for the In-House Plans currently investing in the Funds. Cole Taylor, which was established in 1929, is independent of and unrelated to Chicago Trust and each of its affiliates.

As of December 31, 1995, Cole Taylor exercised discretionary investment authority over approximately $362,601,000 of fiduciary assets, including approximately $171,511,000 of assets of employee benefit plans covered by the Act and non-qualified employee benefit plans. As of December 31, 1995, Cole Taylor also served as directed trustee, agent or custodian with respect to approximately $238,131,900 of assets of employee benefit plans covered by the Act and non-qualified employee benefit plans.

Description of the Transactions

2. Chicago Trust requests retroactive exemptive relief with respect to the in-kind transfer of all or a *pro rata* portion of an In-House Plan's or a Client Plan's assets from the terminating CIFs identified above to the Funds, in exchange for shares of the Funds. In addition, Chicago Trust requests retroactive exemptive relief for the receipt of fees from the Funds in connection with the investment of assets of Client Plans for which the Bank acts as a trustee, investment manager, or custodian, in shares of the Funds in instances where Chicago Trust is an investment adviser, custodian, and shareholder servicing agent for the Funds.[19] The exemptive relief provided for the receipt of fees would cover the Client Plans only, specifically those Plans for which Chicago Trust exercises investment discretion as well as Client Plans where investment decisions are made a Second Fiduciary.[20] If granted, the exemption would be effective as of September 21, 1995.

In-Kind Transfers to the Funds by In-House Plans and Client Plans

3. Although Chicago Trust has maintained CIFs in which In-House Plans and Client Plans have invested as investment options in accordance with requirements under Federal or state banking laws that apply to collective investment trusts, it decided to terminate certain of its CIFs and offer to the Plans participating in such CIFs appropriate interests in certain Funds as alternative investments. Chicago Trust believes that the interests of the Plans invested in the CIFs would be better served by investment in shares of the Funds. According to Chicago Trust, by investing in the Funds, a Plan would be afforded daily valuations reported in newspapers of general circulation and increased liquidity.

To avoid the potentially large brokerage expenses that would otherwise be incurred, Chicago Trust proposes that from time-to-time, the assets of its remaining CIFs (or similar future CIFs [21]) be transferred in-kind to corresponding portfolios of the Funds in exchange for shares of such Funds. No brokerage commissions or other fees or expenses (other than customary transfer charges paid to parties other than Chicago Trust or its affiliates) would be charged to the CIFs in connection with the in-kind transfers of assets into the Funds and the acquisition of shares of the Funds by the CIFs. In addition, no 12b–1 Fees would be paid to Chicago Trust or its affiliates in connection with such transactions.

4. On September 21, 1995, Chicago Trust made in-kind transfers of assets of the In-House Plans and the Client Plans that had been held in the Balanced Fund, the Core Equity Fund, the Fixed Income Fund and the Short-Term Investment Fund, in exchange for shares of the Funds. The affected CIFs had the same investment characteristics as their

[19] Chicago Trust is not requesting an exemption for investments in the Funds by the In-House Plans. Chicago Trust represents that the In-House Plans may acquire or sell shares of the Funds pursuant to Prohibited Transaction Exemption (PTE) 77–3 (42 FR 18734, April 8, 1977). PTE 77–3 permits the acquisition or sale of shares of a registered, open-end investment company by an employee benefit plan covering only employees of such investment company, employees of the investment adviser or principal underwriter for such investment company, or employees of any affiliated person (as defined therein) of such investment adviser or principal underwriter, provided certain conditions are met. The Department expresses no opinion on whether any transactions with the Funds by the In-House Plans would be covered by PTE 77–3.

[20] Chicago Trust is not requesting exemptive relief for the provision of sweep services to Client Plans. Chicago Trust represents that since both the CIFs and the Funds employ daily valuations, there is no need for sweep services.

[21] For example, CIFs acquired through mergers with or acquisitions of other Banks.

corresponding Fund portfolios. The shares of such Funds were equal in value to the CIF assets exchanged. All in-kind transfers were effected as of a single valuation date. Following the in-kind transfers, each CIF was terminated in accordance with the provisions of the applicable Declarations of Trust and law. Any remaining assets in the CIFs from which the in-kind transfers were made were converted into cash. No in-kind transfers were made from the Capital Appreciation Fund, the Growth Fund, the International Equity Fund, the Safety of Principal Fund or the U.S. Government Fund. As stated above, these CIFs were to be continued.

Fund shares received by the terminated CIF were distributed to the accounts of the In-House Plans and the Client Plans, in proportion to such Plans' investment in the CIFs, so that each In-House Plan or Client Plan would be credited with Fund shares that were equal in value to its *pro rata* share of the CIFs assets which were transferred. A Plan not electing to participate in the Funds received a cash payment representing a *pro rata* portion of the assets of the terminating CIF before the final liquidation took place.

A single lot of each in-kind security on the records of the CIF was established. The cost-basis of each in-kind security was the market value on the conversion date. The trade date of each in-kind transaction was the actual date the security was received by the custodian bank. The same custodian bank would hold the assets of the Funds and the CIFs. The in-kind securities were valued using the same pricing vendor and methodologies as the Fund and in accordance with the valuation procedures described in Rule 17a–7(b) under the '40 Act, as amended from time to time or any successor rule, regulation, or similar pronouncement. In this regard, Chicago Trust represents that the ''current market price'' for specific types of CIF securities involved in the transaction was determined as follows:

(a) If the security was a ''reported security'' as the term is defined in Rule 11Aa3–1 under the '34 Act, the last sale price with respect to such security reported in the consolidated transaction reporting system (the Consolidated System); or if there were no reported transactions in the Consolidated System that day, the average of the highest current independent bid and the lowest current independent offer for such security (reported pursuant to Rule 11Ac1–1 under the '34 Act), as of the close of business on the CIF valuation date.

(b) If the security was not a reported security, and the principal market for such security was an exchange, then the last sale on such exchange; or if there were no reported transactions on such exchange that day, the average of the highest current independent bid and lowest current independent offer on such exchange as of the close of business on the CIF valuation date.

(c) If the security was not a reported security and was quoted in the NASDAQ system, then the average of the highest current independent bid and lowest current independent offer reported on Level 1 of NASDAQ as of the close of business on the CIF valuation date.

(d) For all other securities, the average of the highest current independent bid and lowest current independent offer as of the close of business, determined on the basis of reasonable inquiry. (For securities in this category, Chicago Trust represents that it obtained quotations from at least three sources that were either broker-dealers or pricing services independent of and unrelated to Chicago Trust and, where more than one valid quotation was available, used the average of the quotations to value the securities, in conformance with interpretations by the SEC and practice under Rule 17a–7.)

The same vendor performing fund accounting for the CIFs performed fund accounting for the Funds. The number of Fund shares to be issued was computed by dividing the total transferred fund market value by the net asset value of the Fund at the close of business on the conversion date. The number of shares of the Funds issued was allocated to the holders of the predecessor CIFs in the same proportion as the holdings in the CIFs.[22]

No in-kind transfer was made except in accordance with pre-established objective procedures which were approved by the Board of Directors of the Funds which provided that such in-kind transfers would: (a) Consist solely of assets which were consistent with the investment objectives, policies and restrictions of the transferee Fund; (b) satisfy the applicable requirements of the '40 Act and the Code; and (c) consist of assets which had a readily ascertainable market value (determined as of the close of business on the effective date of such in-kind transfer by reference to independent sources in accordance with the valuation procedures described in Rule 17a–7, are liquid and are not subject to restrictions on resale). Non-conforming assets were sold on the open market through an unaffiliated brokerage firm and the proceeds of such sale were transferred in cash.

In addition, no in-kind transfer was made unless an In-House Plan or a Client Plan was represented by a Second Fiduciary who was independent of and unrelated to Chicago Trust. Such Second Fiduciary was required to give written approval of the in-kind transfer in advance following such fiduciary's receipt of written notice of the in-kind transfer transaction and disclosure of the following information: (a) A current prospectus of the Funds; (b) a description of the fees, including investment advisory fees and all other fees to be charged to or paid by the Plan and by the Funds to Chicago Trust, including the nature and extent of any differential between the rates of such fees; (c) the reasons why Chicago Trust considered the in-kind transfer to be appropriate for the In-House Plan or the Client Plan; (d) a description of any limitations applicable to the in-kind transfer of assets from the CIFs to the Funds; and (e) the last date as of which consent to an in-kind transfer could be given by the Second Fiduciary, along with the disclosure that if consent was not given by that date, the Second Fiduciary would be deemed to have withheld consent to an in-kind transfer with respect to an In-House Plan or a Client Plan. Any approval by a Second Fiduciary was terminable at will by the Second Fiduciary, without penalty to an In-House Plan or a Client Plan invested in shares of any of the Funds.

Following the in-kind transfers, Chicago Trust sent the Second Fiduciary of the In-House Plans as well as Second Fiduciaries of the Client Plans, written confirmations of the transactions. In this regard, not later than 30 days after each in-kind transfer, Chicago Trust sent a Second Fiduciary written confirmation of the identity of assets that were valued for purposes of the in-kind transfer in accordance with Rule 17a–7(b)(4), the price determined for such assets and the identity of each pricing services or market maker consulted in determining their value.[23] In addition, no later than

[22] At the Plan account level, the conversion was reported in this manner—Assume a Client Plan held 1,000 units of the Core Equity Fund. On April 1, the Client Plan account showed a disposition of the 1,000 units valued at $6.50 with proceeds of $6,500. On the same date, the account showed a purchase of 684.211 shares at $9.50 per share of the Chicago Trust Growth & Income Mutual Fund for a total cost of $6,500 the same amount as the disposition of the Core Equity Fund.

[23] The securities subject to valuation under Rule 17(a)–7(b)(4) include all securities other than ''reported securities,'' as the term is defined in Rule 11Aa3–1 under the Securities Exchange Act of 1934, or those quoted on the NASDAQ system or for which the principal market is an exchange.

90 days after an in-kind transfer, Chicago Trust sent each Second Fiduciary written confirmation of (a) the number of CIF units held by an In-House Plan or a Client Plan before the in-kind transfer (and the related per unit value and the aggregate dollar value of the units transferred); and (b) the number of Fund shares received by the Plan as a result of the in-kind transfer (and the related per share net asset value and the aggregate dollar value of the shares received).

In accordance with the conditions under Section I of this proposed exemption, similar procedures will occur upon any future in-kind exchanges between CIFs maintained by Chicago Trust and the Funds.[24]

Representations of the Second Fiduciary for the In-House Plans Regarding the In-Kind Transfers

5. As stated above, Chicago Trust retained Cole Taylor as the Second Fiduciary to oversee the initial in-kind transfers of CIF assets to the Funds as such transactions would affect the In-House Plans. In such capacity, Cole Taylor represented that it had considerable experience serving in a fiduciary capacity under the provisions of the Act and otherwise.

Cole Taylor stated that it received the following documents and information from Chicago Trust: (a) A copy of the exemption application; (b) written disclosure of information concerning the Funds; (c) a current prospectus for each portfolio of the Funds; (d) a statement describing the fees to be charged to or paid by the In-House Plans and by the Funds to Chicago Trust or to unrelated parties; (e) a disclosure statement explaining why Chicago Trust believed the investment in the Funds by the In-House Plans would be appropriate; (f) a description of any limitations regarding which In-House Plan assets could be invested in shares of the Funds and, if so, the nature of such limitations; and (g) copies of plan and trust documents for the In-House Plans, written investment guidelines applicable thereto and written descriptions of total investment portfolios for the In-House Plans.

Based on the foregoing documents and information, Cole Taylor represented that it understood and accepted the duties, responsibilities and liabilities in acting as a fiduciary for the In-House Plans, including those duties, responsibilities and liabilities that would be imposed on fiduciaries under the Act. In addition, Cole Taylor represented that the terms of the in-kind transfer transactions would be fair to the participants of the In-House Plans and would be comparable to and no less favorable than the terms that would have been reached among unrelated parties.

Cole Taylor represented that the in-kind transfer transactions were in the best interest of the In-House Plans and their participants and beneficiaries for the following reasons: (a) The impact of the in-kind transfers on the In-House Plans should be *de minimus* because the Funds substantially replicate the CIFs in terms of the investment policies and objectives; (b) the Funds would probably continue to experience relative performance similar in nature to the CIFs given the continuity of investment objectives and policies, management oversight and portfolio management personnel; (c) the in-kind transfers would not adversely affect the cash flows, liquidity or investment diversification of the In-House Plans; and (d) the benefits to be derived by the In-House Plans and their participants by investing in the Funds (e.g., broader distribution permitted of the Funds to different types of plans impacting positively on asset size of the Funds and resulting in cost savings to shareholders) would more than offset the impact of minimum additional expenses (e.g., transfer agency fees and fees for shareholder services) that might be borne at the Fund-level by the In-House Plans.

In forming an opinion on the appropriateness of the in-kind transfers, Cole Taylor represented that it conducted an overall review of the In-House Plans, including the In-House Plan documents. Cole Taylor stated that it also examined the total investment portfolios of the In-House Plans to ascertain whether or not the In-House Plans were in compliance with their investment objectives and policies. Further, Cole Taylor asserted that it examined the liquidity requirements of the In-House Plans and reviewed the concentration of the assets of the In-House Plans that were invested in the CIFs as well the portion of the CIFs comprising the assets of the In-House Plans. Finally, Cole Taylor explained that it reviewed the diversification provided by the investment portfolios of the In-House Plans. Based on its review and analysis of the foregoing, Cole Taylor represented that the in-kind transfer transactions would not adversely affect the total investment portfolios of the In-House Plans, compliance by such Plans with their stated investment objectives and policies, or such Plans' cash flows, liquidity or diversification requirements.

As Second Fiduciary, Cole Taylor represented that Chicago Trust would provide it with any documents it considered necessary to perform its duties as Second Fiduciary. In this regard, Chicago Trust provided Cole Taylor with advance written notice of the in-kind transfers and written confirmation statements as described in Representation 4. Upon receipt of such statements, Cole Taylor confirmed whether or not the in-kind transfer transactions had resulted in the receipt by the In-House Plans of shares in the Funds that were equal in value to such Plans' *pro rata* share of assets of the CIFs on the conversion date.

Receipt of Fees by Chicago Trust

6. Prior to the initial in-kind transfer transactions, any investment in the Funds by Chicago Trust for an In-House Plan or a Client Plan was made in accordance with PTE 77–3 or PTE 77–4, respectively. In pertinent part, PTE 77–3 would permit the acquisition or sale of shares of a registered, open-end investment company by an employee benefit plan covering only employees of such investment company, employees of the investment adviser or principal underwriter for such investment company, or employees of any affiliated person (as defined therein) of such investment adviser or principal underwriter provided certain conditions were met. Under certain conditions, PTE 77–4 would permit Chicago Trust to receive fees from the Funds under either of two circumstances: (a) Where a Client Plan did not pay any investment management, investment advisory, or similar fees with respect to the assets of such Plan invested in shares of a Fund for the entire period of such investment; or (b) where a Client Plan paid investment management, investment advisory, or similar fees to Chicago Trust based on the total assets of such Client Plan from which a credit had been subtracted representing such Plan's *pro rata* share of such investment advisory fees paid to Chicago Trust by the Fund. As such, there were two levels of fees involved under PTE 77–4—those fees which Chicago Trust charged to the Client Plans for serving as trustee with investment discretion or as investment manager (i.e., the Plan-level fees); and those fees Chicago Trust charged to the Funds (i.e., the Fund-level fees) for serving as investment advisor, custodian, or service provider. Plan-level fees for similar services

[24] It should be noted that with respect to future in-kind transfers, Chicago Trust will provide the Second Fiduciary with copies of the subject proposed exemption and grant notice upon such fiduciary's request.

provided by Chicago Trust ranged from 0.40 percent to 0.95 percent.

With respect to PTE 77–4, Chicago Trust subtracted a credit from the Plan-level investment management fee representing the Client Plan's pro rata share of the investment advisory fee paid by the Funds to Chicago Trust and, if applicable, Montag and Caldwell (including that portion of the investment advisory fee that Chicago Trust paid to Talon.)[25]

Since September 21, 1995, Chicago Trust has no longer charged a Plan-level investment management fee with respect to the assets of a Client Plan that have been invested in shares of the Funds. Rather, Chicago Trust or Montag & Caldwell, as applicable, are receiving the investment advisory fee payable under the respective investment advisory agreements with the Funds, instead of the Plan-level investment management fee. Talon is receiving an investment advisory fee from Chicago Trust pursuant to the terms of its sub-advisory agreement. For In-House Plans, Chicago Trust represents that it intends to continue relying upon PTE 77–3 with respect to the receipt of Fund-level investment advisory fees by it for assets of In-House Plans that are invested in shares of the Funds.[26]

Chicago Trust is charging In-House Plans and Client Plans for Plan-level recordkeeping, administrative, accounting and custodial services which do not involve investment management, such as custody of plan assets, maintaining plan records, preparing periodic reports of plan assets and participant accounts, effecting participant investment directions, processing participant loans and accounting for contributions, payments of benefits and other receipts and distributions. Chicago Trust's fees for such Plan-level services will continue to be negotiated with each Client Plan and its fees for such services for In-House Plans will continue to be limited to the reimbursement of direct expenses properly and actually incurred in the performance of the services.[27]

At present, all services other than investment advisory services are provided to the Funds or their distributor by unrelated parties. However, Chicago Trust represents that the Funds may, in the future, wish to contract with it or an affiliate to provide administrative, custodial, transfer, accounting or similar services (i.e., Secondary Services) to the Funds or their distributor.[28]

At the same time that it gives advance written notice and seeks approval of an in-kind transfer from a Second Fiduciary, Chicago Trust will also give the Second Fiduciary notice that it is seeking approval to provide Secondary Services to the Funds, either directly or by subcontracting with third parties. Such notice will describe the fees for Secondary Services (whether provided by Chicago Trust directly or through third parties) for which it is seeking approval from the Second Fiduciary and disclose that, while Chicago Trust is not presently providing Secondary Services to the Funds, it may do so in the future and intends to rely on the approval of the Second Fiduciary for its provision of Secondary Services.[29]

Chicago Trust will receive investment advisory fees or fees for Secondary Services from the Funds under the following conditions: (a) no sales commissions will be paid by the Client Plans in connection with purchases or sales of shares of the Funds and no redemption fees will be paid in connection with the sale of such shares by the Client Plans to the Funds; (b) the price paid or received by the Client Plans for shares in the Funds will be the net asset value per share at the time of the transaction and is the same price which would have been paid or received for the shares by any other investor at that time; (c) Chicago Trust and its officers or directors will not purchase from or sell to any of the Client Plans shares of any of the Funds; (d) for each Client Plan, the combined total of all fees received by Chicago Trust for the provision of Plan-level services to the Client Plans, and in connection with the provision of investment advisory services or Secondary Services to any of the Funds in which the Client Plans may invest, will not be in excess of ''reasonable compensation'' within the meaning of section 408(b)(2) of the Act; (e) Chicago Trust will not receive any fees or commissions in connection with the purchase, holding or sale of shares of the Funds by a Client Plan; and (f) the receipt of investment advisory fees and fees for Secondary Services, and any changes in such fees is, with respect to any Client Plan, approved by the Second Fiduciary of the Client Plan pursuant to the procedures described herein.

Authorization Requirements for Client Plans

7. As described in Representation 6, Chicago Trust intends to seek the approval of the Second Fiduciary of each Client Plan to receive fees for providing Secondary Services, directly or by subcontracting with a third party. Chicago Trust will then rely on that approval for its receipt of fees for Secondary Services from the Funds.[30]

To the extent that the fees for investment advisory services or Secondary Services exceed the rates approved by the Second Fiduciary of a Client Plan or an additional Secondary Service for which a fee is charged causes an increase in the fees paid to Chicago Trust over the rates approved by the Second Fiduciary of a Client

[25] The rates paid by each of the portfolios of the Funds for services rendered differed depending on the fee schedule for each portfolio and on the daily net assets in each portfolio. For example, for investment advisory services provided to the Chicago Trust Money Market Fund, Chicago Trust would be entitled to receive an annual fee of 0.40 percent based on that Fund's average daily net assets. For investment advisory services provided to the Chicago Trust Intermediate Municipal Bond Fund, Chicago Trust would be entitled to receive an annual fee of 0.60 percent based upon such Fund's average daily net assets.

[26] The Department expresses no opinion herein on the applicability of PTE 77–3 with respect to ongoing investments by the In-House Plans in shares of the Funds or to the receipt of fees from the Funds by Chicago Trust.

[27] Chicago Trust represents that it is relying upon section 408(b)(2) with respect to its receipt of fees for such administrative services. The Department expresses no opinion herein on whether the provision of such services will satisfy section 408(b)(2) of the Act.

[28] The fact that certain transactions and fee arrangements are the subject of an administrative exemption does not relieve the fiduciaries of the Client Plans from the general fiduciary responsibility provisions of section 404 of the Act. Thus, the Department cautions Second Fiduciaries of the Client Plans investing in the Funds that they have an ongoing duty under section 404 of the Act to monitor the services provided to such Plans to assure that the fees paid by the Client Plans for such services are reasonable in relation to the value of the services provided. These responsibilities would include determinations that the services provided are not duplicative and that the fees are reasonable in light of the level of services provided.

[29] With respect to In-House Plans, Chicago Trust represents that it intends to rely on PTE 77–3. However, the Department expresses no opinion herein as to the applicability of PTE 77–3 to Chicago Trust's receipt of fees for Secondary Services.

[30] The Department notes that an increase in the amount of a fee for an existing Secondary Service (other than through an increase in the value of the underlying assets in the Funds) or the imposition of a fee for a newly-established Secondary Service shall be considered an increase in the rate of such Secondary Fee. However, in the event a Secondary Fee has already been described in writing to the Second Fiduciary and the Second Fiduciary has provided authorization for the amount of such Secondary Fee, and such fee was waived, no further action by Chicago Trust would be required in order for Chicago Trust to receive such fee at a later time. Thus, for example, no further disclosure would be necessary if Chicago Trust had received authorization for a fee for custodial services from Client Plan investors and subsequently determined to waive the fee for a period of time in order to attract new investors but later charged the fee. However, reinstituting the fee at an amount greater than previously disclosed would necessitate Chicago Trust providing notice of the fee increase and a Termination Form.

Plan, Chicago Trust will use the ''Termination Form'' approach. In this regard, in the event of an increase in the rate of any fees paid by the Funds to Chicago Trust for investment advisory services that Chicago Trust provides to the Funds over an existing rate for such services that had been authorized by a Second Fiduciary of a Client Plan, Chicago Trust will, at least 30 days in advance of the implementation of such increase, provide a written notice (which may take the form of a proxy statement, letter, or similar communication that is separate from the prospectus of the Funds and which explains the nature and amount of the increase in fees) to the Second Fiduciary of each Client Plan invested in a Fund which is increasing such fees. Such notice will be accompanied by the Termination Form.

In addition, in the event of an (a) addition of a Secondary Service provided by Chicago Trust to the Funds for which a fee is charged or (b) an increase in the rate of any fee paid by the Funds to Chicago Trust for any Secondary Service that results either from an increase in the rate of such fee or from the decrease in the number or kind of services performed by Chicago Trust for such fee over an existing rate for such Secondary Service, which had been authorized by the Secondary Fiduciary, Chicago Trust will, at least 30 days in advance of the implementation of such Secondary Service or fee increase, provide a written notice (which may take the form of a proxy statement, letter, or similar communication that is separate from the prospectus of the Funds and which explains the nature and amount of the additional Secondary Service for which a fee is charged or the nature and amount of the increase in fees) to the Second Fiduciary of each of the Client Plans invested in a Fund which is adding a service or increasing fees. Such notice will also be accompanied by the Termination Form.

The instructions to the Termination Form will expressly provide an election to the Second Fiduciary to terminate, at will, any prior authorizations without penalty to the Client Plan and stipulate that failure to return the form will result in the continuation of all authorizations previously given by the Second Fiduciary and be deemed to be an approval of the additional Secondary Service for which a fee is charged or increase in the rate of any fees for Secondary Services or investment advisory services. Termination of the authorization by a Client Plan to invest in the Funds will be effected by Chicago Trust selling the shares of the Funds held by the affected Client Plan within the period of time specified by the Client Plan, but not later than one business day following receipt by Chicago Trust of the Termination Form or any other written notice of termination. If, due to circumstances beyond the control of Chicago Trust the sale cannot be executed within one business day, Chicago Trust will have one additional day to complete such sale.

The Second Fiduciary will be supplied with a Termination Form at least once each year, beginning with the calendar year that begins after the date of the notice granting this proposed exemption is published in the Federal Register and continuing for each calendar year thereafter, regardless of whether there have been any changes in the fees payable to Chicago Trust or changes in other matters in connection with the services rendered to the Funds. However, if the Termination Form has been provided to the Second Fiduciary in connection with an increase in fees for investment advisory services, the addition of a Secondary Service for which a fee is charged or an increase in any fees paid by the Funds to Chicago Trust, the Termination Form need not be provided again to the Second Fiduciary until at least six months have elapsed, unless such Termination Form is required to be sent sooner as a result of an addition of a Secondary Service for which a fee is charged or an increase in the fees for Secondary Services or investment advisory services that are paid to Chicago Trust, which would cause Chicago Trust's aggregate fees to exceed the rates approved by the Second Fiduciary.

Ongoing Disclosures to Client Plans

8. In addition to the disclosures provided to the Second Fiduciary of a Client Plan prior to investment in the Funds, Chicago Trust represents that it will provide the Second Fiduciary, at least annually, with a copy of an updated prospectus for the Funds. In addition, Chicago Trust will provide the Second Fiduciary with a report or statement (which may take the form of the most recent financial report, the current statement of additional information or some other written statement) which contains a description of all fees paid by the Funds to Chicago Trust within 15 days of such document's availabillity.

Although Chicago Trust does not presently execute securities brokerage transactions for the investment portfolios of the Funds, in the event that it or an adviser or a sub-adviser to the Funds (including their affiliates) does perform brokerage services, it will provide, at least annually, to the Second Fiduciary in which a Client Plan invests, a written disclosure indicating: (a) The total, expressed in dollars, brokerage commissions attributable to each Fund's investment portfolio which represent Related Party Brokerage; (b) the total, expressed in dollars, of brokerage commissions attributable to each Fund's investment portfolio other than Related Party Brokerage; (c) the average brokerage commissions per share, expressed as cents per share, paid by each Fund for Related Party Brokerage; and (d) the average brokerage commissions per share, expressed as cents per share, paid by each Fund for brokerage other than Related Party Brokerage.

9. In summary, it is represented that the proposed transactions have satisfied or will satisfy the statutory criteria for an exemption under section 408(a) of the Act because:

(a) With respect to the in-kind transfer of the assets of an In-House Plan or a Client Plan invested in a CIF in exchange for shares of a Fund, a Second Fiduciary has authorized or will authorize in writing, such in-kind transfer prior to the transaction only after receiving full written disclosure of information concerning the Fund.

(b) Each In-House Plan or Client Plan has received or will receive shares of the Funds in connection with the transfer of assets of a terminating CIF which have a total net asset value that is equal to the value of such Plan's *pro rata* share of the CIF assets on the date of the transfer as determined in a single valuation performed in the same manner and at the close of the business day, using independent sources in accordance with procedures established by the Funds which comply with Rule 17a–7 of the '40 Act, as amended, and the procedures established by the Funds pursuant to Rule 17a–7 for the valuation of such assets.

(c) Chicago Trust has sent or will send by regular mail to each affected In-House Plan and Client Plan a written confirmation, not later than 30 days after the completion of the transaction, containing the following information: (1) The identity of each security that was valued for purposes of the transaction in accordance with Rule 17a–7(b)(4) of the '40 Act; (2) the price of each such security involved in the transaction; and (3) the identity of each pricing service or market maker consulted in determining the value of such securities.

(d) Chicago Trust has sent or will send by regular mail, no later than 90 days after completion of each transfer, a

written confirmation that contains the following information: (1) the number of CIF units held by an In-House Plan or a Client Plan immediately before the transfer, the related per unit value and the total dollar amount of such CIF units; and (2) the number of shares in the Funds that are held by the Plan following the conversion, the related per share net asset value and the total dollar amount of such shares.

(e) The price that has been or will be paid or received by an In-House Plan or a Client Plan for shares of the Funds is the net asset value per share at the time of the transaction and is the same price for the shares which will be paid or received by any other investor at that time.

(f) No sales commissions or redemption fees have been or will be paid by an In-House Plan or a Client Plan in connection with the purchase of shares of the Funds.

(g) For each Client Plan, the combined total of all fees received by Chicago Trust for the provision of Plan-level services, and in connection with the provision of investment advisory services or Secondary Services to any of the Funds in which Client Plans may invest, will not be in excess of ''reasonable compensation'' within the meaning of section 408(b)(2) of the Act.

(h) Chicago Trust has not received and will not receive any 12b–1 Fees in connection with the transactions.

(i) Any authorizations made by a Client Plan regarding investments in the Funds and the fees paid to Chicago Trust (including increases in the contractual rates of fees for Secondary Services that are retained by the Chicago Trust) have been and will be terminable at will by the Client Plan, without penalty to the Client Plan and have been and will be effected within one business day following receipt by Chicago Trust, from the Second Fiduciary, of the Termination Form or any other written notice of termination, unless circumstances beyond the control of Chicago Trust delay execution for no more than one additional business day.

(j) The Second Fiduciary has received and will receive written notice accompanied by the Termination Form with instructions on the use of the form at least 30 days in advance of the implementation of any increase in the rate of any fees paid by the Funds to Chicago Trust regarding investment advisory services, fees for Secondary Services or an additional Secondary Service for which a fee is charged which exceed the rates authorized for Chicago Trust by the Second Fiduciary.

(k) All dealings by or between the Client Plans, the Funds and Chicago Trust have been and will be on a basis which is at least as favorable to the Client Plans as such dealings are with other shareholders holding the same class of shares of the Funds.

Notice to Interested Persons

Notice of the proposed exemption will be given to interested persons who had investments in the terminated CIFs and from whom approval is being sought for the in-kind transfers of Plan assets from such CIFs in exchange for shares of the Funds. In this regard, interested persons will include Cole Taylor, the Second Fiduciary of the In-House Plans; active participants in the In-House Plans; and Second Fiduciaries of the Client Plans. Notice will be provided to each Second Fiduciary by first class mail and to active particpants in the In-House Plans by posting at major job sites. Such notice will be given to interested persons within 14 days following the publication of the notice of pendency in the Federal Register. The notice will include a copy of the notice of proposed exemption as published in the Federal Register as well as a supplemental statement, as required, pursuant to 29 CFR 2570.43(b)(2), which shall inform interested persons of their right to comment on and/or to request a hearing. Comments and requests for a public hearing are due within 44 days of the publication of the notice of proposed exemption in the Federal Register.

FOR FURTHER INFORMATION CONTACT: Ms. Jan D. Broady of the Department, telephone (202) 219–8881. (This is not a toll-free number.)

General Information

The attention of interested persons is directed to the following:

(1) The fact that a transaction is the subject of an exemption under section 408(a) of the Act and/or section 4975(c)(2) of the Code does not relieve a fiduciary or other party in interest of disqualified person from certain other provisions of the Act and/or the Code, including any prohibited transaction provisions to which the exemption does not apply and the general fiduciary responsibility provisions of section 404 of the Act, which among other things require a fiduciary to discharge his duties respecting the plan solely in the interest of the participants and beneficiaries of the plan and in a prudent fashion in accordance with section 404(a)(1)(b) of the act; nor does it affect the requirement of section 401(a) of the Code that the plan must operate for the exclusive benefit of the employees of the employer maintaining the plan and their beneficiaries;

(2) Before an exemption may be granted under section 408(a) of the Act and/or section 4975(c)(2) of the Code, the Department must find that the exemption is administratively feasible, in the interests of the plan and of its participants and beneficiaries and protective of the rights of participants and beneficiaries of the plan;

(3) The proposed exemptions, if granted, will be supplemental to, and not in derogation of, any other provisions of the Act and/or the Code, including statutory or administrative exemptions and transitional rules. Furthermore, the fact that a transaction is subject to an administrative or statutory exemption is not dispositive of whether the transaction is in fact a prohibited transaction; and

(4) The proposed exemptions, if granted, will be subject to the express condition that the material facts and representations contained in each application are true and complete and accurately describe all material terms of the transaction which is the subject of the exemption. In the case of continuing exemption transactions, if any of the material facts or representations described in the application change after the exemption is granted, the exemption will cease to apply as of the date of such change. In the event of any such change, application for a new exemption may be made to the Department.

Signed at Washington, DC, this 19th day of April, 1996.

Ivan Strasfeld,

Director of Exemption Determinations, Pension and Welfare Benefits Administration, U.S. Department of Labor.

[FR Doc. 96–10071 Filed 4–24–96; 8:45 am]

BILLING CODE 4510–29–P

NATIONAL INSTITUTE FOR LITERACY

Agency Information Collection Activities

ACTION: Notice.

SUMMARY: In compliance with the Paperwork Reduction Act (44 U.S.C. 3501 *et seq.*), this notice announces an Information Collection Request (ICR) by the NIFL. The ICR describes the nature of the information collection and its expected cost and burden.

DATES: Comments must be submitted on or before June 24, 1996.

FOR FURTHER INFORMATION: Sondra Stein at (202) 632–1508 or e-mail: sstein@nifl.gov

SUPPLEMENTARY INFORMATION:

Title

Application for Adult Learning System Reform and Improvement Grant: Stage II Collaborative Development of Equipped for the Future Adult Literacy Standards cooperative agreements.

Abstract

The National Literacy Act of 1991 established the National Institute for Literacy and required that the Institute conduct basic and applied research and demonstrations on literacy; collect and disseminate information of Federal, State and local entities with respect to literacy; and improve and expand the system for delivery of literacy services. This form will be used by individual public and private non-profit organizations and agencies that represent key literacy consumer, practitioner, provider, administrator, and funded constituencies; and consortia of such organizations and agencies operating at a state, regional (multi-state), or national level. These individuals and organizations may apply for funding to continue development of the framework for voluntary adult literacy standards currently being developed by the NIFL Equipped for the Future grantees. Evaluations to determine successful applications will be made using the published criteria. The Institute will use this information to make a maximum of three cooperative agreement awards for a period of up to 3 years.

Burden Statement

The burden for this collection of information is estimated at 80 hours per response. This estimate includes the time needed to review instructions, complete the form, and review the collection of information.

Respondents

Individual public and private non-profit organizations and agencies that represent key literacy consumer, practitioner, provider, administrator, and funded constituencies; and consortia of such organizations and agencies operating at a state, regional (multi-state), or national level.

Estimated number of Respondents: 10.

Estimated Number of Responses Per Respondent: 1.

Estimated Total Annual Burden on Respondents: 800 hours.

Frequency of Collection

One time. Send comments regarding the burden estimate or any other aspect of the information collection, including suggestions for reducing the burden to: Sondra Stein, National Institute for Literacy, 800 Connecticut Avenue NW., Suite 200, Washington, DC 20006.

Carolyn Staley,

Deputy Director.

[FR Doc. 96–10329 Filed 4–24–96; 8:45 am]

BILLING CODE 6055–01–M

Agency Information Collection Activities

ACTION: Notice.

SUMMARY: In compliance with the Paperwork Reduction Act (44 U.S.C. 3501 *et. seq.*), this notice announces an Information Collection Request (ICR) by the NIFL. The ICR describes the nature of the information collection and its expected cost and burden.

DATES: Comments must be submitted on or before June 24, 1996.

FOR FURTHER INFORMATION CONTACT: Sondra Stein at (202) 632–1508 or e-mail: sstein@nifl.gov.

SUPPLEMENTARY INFORMATION:

Title

Application for Adult Learning System Reform and Improvement Grant: Equipped for the Future Standards-Based System Reform and Improvement Demonstration grants.

Abstract

The National Literacy Act of 1991 established the National Institute for Literacy (NIFL) and required that the NIFL conduct basic and applied research and demonstrations on literacy, collect and dissemination information of Federal, State and local entities with respect to literacy; and improve and expand the system for delivery of literacy services. This form will be used by current grantees in NIFL's Equipped for the Future (EFF) planning grant program. They are the only eligible applicants for funding under this program to implement the long-range strategic plans developed during the current grant period. Evaluations to determine successful applications will be made using the published criteria. The Institute will use this information to make a maximum of three cooperative agreement awards for a period of up to 3 years.

Burden Statement

The burden for this collection of information is estimated at 40 hours per response. This estimate includes the time needed to review instructions, complete the form, and review the collection of information.

Respondents

Individual public and private non-profit organizations and agencies and consortia of such organizations and agencies that are current grantees in NIFL's EFF planning grant program.

Estimated Number of Respondents: 9.

Estimated Number of Responses per Respondent: 1.

Estimated Total Annual Burden on Respondents: 360.

Frequency of Collection

One time. Send comments regarding the burden estimate or any other aspect of the information collection, including suggestions for reducing the burden to: Sondra Stein, National Institute for Literacy, 800 Connecticut Avenue, NW., Suite 200, Washington, DC 20006.

Carolyn Staley,

Deputy Director, National Institute for Literacy

[FR Doc. 96–10328 Filed 4–24–96; 8:45 am]

BILLING CODE 6055–01–M

NATIONAL COMMUNICATIONS SYSTEM

Telecommunications; Project 25 Land Mobile Radio Standards

AGENCY: National Communications System, Technology and Standards Division.

ACTION: Notice of comment on proposed standards.

SUMMARY: The purpose of this notice is to solicit the views of Federal agencies, industry, the public, and State and local governments on proposed Interim Federal Standards: 001101A, ''Telecommunications: Land Mobile Radio, Project 25 System and Standards Definition''; 001102A, ''Telecommunications: Land Mobile Radio, Project 25 Common Air Interface''; 001104A, Telecommunications: Land Mobile Radio, Project 25 Encryption''; 001105, ''Telecommunications: Land Mobile Radio, Project 25 Over-the-Air-Rekeying''; 001106, ''Telecommunications: Land Mobile Radio, Project 25 Data Communications''; and 001109, ''Telecommunications: Land Mobile Radio, Project 25 System Interface''. Comments are due within 90 days of the date of this notice. Send comments to the National Communications System, Technology and Standards Division, Attn: N6, 701 South Court House Road, Arlington, VA 22204–2198.

SUPPLEMENTARY INFORMATION:

1. The General Services Administration (GSA) is responsible

under the provisions of the Federal Property and Administrative Services Act of 1949, as amended, for the Federal Standardization Program. On August 14, 1972, the Administrator of General Services designated the National Communications System (NCS) as the responsible agent for the development of Federal telecommunication standards for NCS interoperability and the computer communication interface.

2. Prior to the adoption of proposed Federal standards, it is important that proper consideration be given to the needs and views of Federal agencies, industry, the public, and State and local governments.

3. Interim Federal Standards are non-mandatory.

4. Project 25 is a joint effort of the Federal Government, state government (represented by the National Association of State Telecommunications Directors), and local government (represented by the Association of Public-safety Communications Officials, International) to develop common standards for public safety Land Mobile Radios (LMR). Industry (represented by the Telecommunications Industry Association) has also been heavily involved in the Project 25 effort.

5. Proposed Interim Federal Standard 001101A will adopt Telecommunication Industry Association (TIA) TSB 102. Proposed Interim Federal Standard 001102A will adopt TIA TSB 102BAAA, TSB 102BAAC, and TSB 102BAAD. Proposed Interim Federal Standard 001104A will adopt TIA TSB 102AAAB, Interim Std 102AAAA, and National Security Agency Specification V23–94–1 (classified document). Proposed Interim Federal Standard 001105 will adopt TIA TSB 102AACA, and National Security Agency Specification V23–94–1 (classified document). Proposed Interim Federal Standard 001106 will adopt TIA TSB 102BAEA, TSB 102BAEB, and TSB 102BAEC. Proposed Interim Federal Standard 001109 will adopt TIA TSB 102BAEE and TSB 102BAFA.

6. Requests for copies of the draft proposed Interim Federal Standards 001101A, 001102A, 001104A, 001105, 001106, and 001109 should be directed to the National Communications System, Technology and Standards Division, Attn: N6, 701 South Court House Road, Arlington, VA 22204–2199. They are also available on the Worldwide Web, http://members.aol.com/project 25/.

FOR FURTHER INFORMATION CONTACT: Mr. Robert Fenichel, National Communications System, telephone (703) 607–6190.

Dennis Bodson,

Chief, Technology and Standards Division.

[FR Doc. 96–10159 Filed 4–24–96; 8:45 am]

BILLING CODE 5000–03–M

NATIONAL SCIENCE FOUNDATION

Special Emphasis Panel in Geosciences; Notice of Meeting

In accordance with the Federal Advisory Committee Act (Pub. L. 92–463, as amended), the National Science Foundation announces the following meeting.

Name: Special Emphasis Panel in Geosciences (#1756).

Date & Time: Monday, May 13-Thursday, May 16, 1996; 8:30 AM-5:00 PM.

Place: Rooms 310, 320, 330, 340, National Science Foundation, 4201 Wilson Blvd., Arlington, VA 22230.

Type of Meeting: Closed.

Contact Person: Dr. Michael R. Reeve, Section Head, National Science Foundation, 4201 Wilson Blvd., Arlington, VA 22230. Telephone: (703) 306–1582.

Purpose of Meeting: To provide advice and recommendations concerning proposals submitted to NSF for financial support.

Agenda: To review and evaluate Ocean Sciences Research Section (OSRS) proposals as part of the selection process for awards.

Reason for Closing: The proposals being reviewed include information of a proprietary or confidential nature, including technical information; financial data, such as salaries; and personal information concerning individuals associated with the proposals. These matters are exempt under 5 U.S.C. 552b(c), (4) and (6) of the Government in the Sunshine Act.

Dated: April 22, 1996.

M. Rebecca Winkler,

Committee Management Officer.

[FR Doc. 96–10248 Filed 4–24–96; 8:45 am]

BILLING CODE 7555–01–M

Special Emphasis Panel in Research, Evaluation and Communication; Notice of Meeting

In accordance with the Federal Advisory Committee Act (Pub. L. 92–463, as amended), the National Science Foundation announces the following meeting:

Name: Special Emphasis Panel in Research, Evaluation and Communication.

Date and Time: May 16, 1996; 8:30 a.m. to 6:00 p.m.; May 17, 1996; 8:00 a.m. to 8:00 p.m.; May 18, 1996; 8:00 a.m. to 3:00 p.m.

Place: Room 370, National Science Foundation, 4201 Wilson Boulevard, Arlington, VA 2230.

Type of Meeting: Closed.

Contact Person: Dr. Nora Sabelli, Senior Program Director, 4201 Wilson Boulevard, Room 855, Arlington, VA 22230. Telephone (703) 306–1651.

Purpose of Meeting: To provide advice and recommendations concerning proposals submitted to NSF for financial support.

Agenda: To review and evaluate proposals and provide advice and recommendations as part of the selection process for proposals submitted to the Applications of Advanced Technologies Program.

Reason for Closing: Because the proposals being reviewed include information of a proprietary or confidential nature, including technical information; financial data, such as salaries; and personal information concerning individuals associated with proposals, the meeting are closed to the public. These matters are within exemptions (4) and (6) of 5 U.S.C. 552b(c), Government in the Sunshine Act.

Dated: April 22, 1996.

M. Rebecca Winkler,

Committee Management Officer.

[FR Doc. 96–10249 Filed 4–24–96; 8:45 am]

BILLING CODE 7555–01–M

Special Emphasis Panel in Advanced Scientific Computing; Notice of Meeting

In accordance with the Federal Advisory Committee Act (Pub. L. 92–463, as amended), the National Science Foundation announces the following meeting:

Name: Special Emphasis Panel in Advanced Scientific Computing (#1185).

Date and Time: May 8, 1996, 8:30 am to 5:00 pm.

Place: National Science Foundation, 4201 Wilson Boulevard, Suite 1150, Arlington, VA 22230.

Type of Meeting: Closed.

Contact Person: Dr. John Van Rosendale, Program Director, New Technologies Program, Suite 1122, National Science Foundation, 4201 Wilson Boulevard, Arlington, VA 22230, (703) 306–1962.

Purpose of Meeting: To provide recommendations and advice concerning proposals submitted to NSF for financial support.

Agenda: To review and evaluate proposals in the Compiler Infrastructure Panel as part of the selection process for awards.

Reason for Closing: The proposals being reviewed include information of a proprietary or confidential nature, including technical information; financial data, such as salaries; and personal information concerning individuals associated with the proposals. These matters are exempt under 5 U.S.C. 552b(c), (4) and (6) of the Government in the Sunshine Act.

Dated: April 22, 1996.

M. Rebecca Winkler,

Committee Management Officer.

[FR Doc. 96–10250 Filed 4–24–96; 8:45 am]

BILLING CODE 7555–01–M

NUCLEAR REGULATORY COMMISSION

[Docket Nos. 72–17, 50–344]

Portland General Electric Company, Eugene Water and Electric Board, Pacificorp; Notice of Consideration of Issuance of a Materials License for the Storage of Spent Fuel and Notice of Opportunity for a Hearing

The Nuclear Regulatory Commission is considering an application dated March 26, 1996, as supplemented April 1, 1996, for a materials license, under the provisions of 10 CFR Part 72, from Portland General Electric Company, *et al.*, (the applicant or PGE) to possess spent fuel and other radioactive materials associated with spent fuel storage in an independent spent fuel storage installation (ISFSI) located in Columbia County, Oregon. If granted, the license will authorize the applicant to store spent fuel in a dry storage cask system at the applicant's Trojan Nuclear Plant site. Pursuant to the provisions of 10 CFR Part 72, the term of the license for the ISFSI would be twenty (20) years.

Prior to issuance of the requested license, the NRC will have made the findings required by the Atomic Energy Act of 1954, as amended (the Act), and the NRC's rules and regulations. The issuance of the materials license will not be approved until the NRC has reviewed the application and has concluded that approval of the license will not be inimical to the common defense and security and will not constitute an unreasonable risk to the health and safety of the public. The NRC will complete an environmental evaluation, in accordance with 10 CFR Part 51, to determine if the preparation of an environmental impact statement is warranted or if an environmental assessment and Finding of No Significant Impact are appropriate. This action will be the subject of a subsequent notice in the Federal Register. Pursuant to 10 CFR 2.105 and 2.1107, by May 28, 1996, the applicant may file a request for a hearing; and any person whose interest may be affected by this proceeding and who wishes to participate as a party in the proceeding must file a written request for a hearing and a petition for leave to intervene with respect to the subject materials license in accordance with the provisions of 10 CFR 2.714. If a request for hearing or petition for leave to intervene is filed by the above date, the NRC or an Atomic Safety and Licensing Board designated by the Commission or by the Chairman of the Atomic Safety and Licensing Board Panel will rule on the request and/or petition, and the Secretary or the designated Atomic Safety and Licensing Board will issue a notice of hearing or an appropriate order. In the event that no request for hearing or petition for leave to intervene is filed by the above date, the NRC may, upon satisfactory completion of all required evaluations, issue the materials license without further prior notice.

A petition for leave to intervene shall set forth with particularity the interest of the petitioner in the proceeding and how that interest may be affected by the results of the proceeding. The petition should specifically explain the reasons why intervention should be permitted with particular reference to the following factors: (1) The nature of the petitioner's right under the Act to be made a party to the proceeding; (2) the nature and extent of the petitioner's property, financial, or other interest in the proceeding; and (3) the possible effect of any order that may be entered in the proceeding on the petitioner's interest. The petition should also identify the specific aspect(s) of the subject matter of the proceeding as to which petitioner wishes to intervene. Any person who has filed a petition for leave to intervene or who has been admitted as a party may amend a petition, without requesting leave of the Board up to 15 days prior to the holding of the first pre-hearing conference scheduled in the proceeding, but such an amended petition must satisfy the specificity requirements described above.

Not later than fifteen (15) days prior to the first pre-hearing conference scheduled in the proceeding, a petitioner shall file a supplement to the petition to intervene which must include a list of contentions which are sought to be litigated in the matter. Each contention must consist of a specific statement of the issue of law or fact to be raised or controverted. In addition, the petitioner shall provide a brief explanation of the bases of the contention and a concise statement of the alleged facts or expert opinion which support the contention and on which the petitioner intends to rely in proving the contention at the hearing. The petitioner must also provide references to those specific sources and documents of which the petitioner is aware and on which the petitioner intends to rely to establish those facts or expert opinion. Petitioner must provide sufficient information to show that a genuine dispute exists with the applicant on a material issue of law or fact. Contentions shall be limited to matters within the scope of the action under consideration. The contention must be one which, if proven, would entitle the petitioner to relief. A petitioner who fails to file such a supplement which satisfied these requirements with respect to at least one contention will not be permitted to participate as a party.

Those permitted to intervene become parties to the proceeding, subject to any limitations in the order granting leave to intervene, and have the opportunity to participate fully in the conduct of the hearing.

A request for a hearing or a petition for leave to intervene must be filed with the Secretary of the Commission, U.S. Nuclear Regulatory Commission, Washington, DC 20555, Attention: Docketing and Services Branch, or may be delivered to the Commission's Public Document Room, Gelman Building, 2120 L Street, NW., Washington, DC, by the above date. Where petitions are filed during the last ten (10) days of the notice period, it is requested that the petitioner promptly so inform the NRC by a toll-free telephone call to Western Union at 1–(800) 248–5100 (in Missouri 1–(800) 342–6700). The Western Union operator should be given Datagram Identification Number N1023 and the following message addressed to Dr. William D. Travers, Director, Spent Fuel Project Office, Office of Nuclear Material Safety and Safeguards; petitioner's name and telephone number; date petition was mailed; plant name; and publication date and page number of this Federal Register notice. A copy of the petition should also be sent to the Office of the General Counsel, U.S. Nuclear Regulatory Commission, Washington, DC 20555, and to Mr. Alvin Alexanderson, Esq., Portland General Electric Company, 121 SW Salmon Street, Portland, Oregon, 97204, General Counsel for the applicant.

Non-timely filings of petitions for leave to intervene, amended petitions, supplemental petitions, and/or requests for hearing will not be entertained absent a determination by the Commission, the presiding Officer, or the presiding Atomic Safety and Licensing Board that the petition and/or request should be granted based upon a balancing of the factors specified in 10 CFR 2.714(a)(1)(i)–(v) and 2.714(d).

The Commission hereby provides notice that this proceeding concerns an application for a license falling within the scope of Section 134 of the Nuclear Waste Policy Act of 1982 (NWPA), 42 U.S.C. 10154. Under Section 134 of NWPA, the NRC, at the request of any petitioner or any party to the proceeding, must use hybrid hearing procedures with respect to ''any matter

which the Commission determines to be in controversy among the parties.'' The hybrid procedures in Section 134 provide for oral argument on matters in controversy, preceded by discovery under the Commission's rules, and the designation, following argument, of only those factual issues that involve a genuine and substantial dispute, together with any remaining questions of law, to be resolved in an adjudicatory hearing. Actual adjudicatory hearings are to be held on only those issues found to meet the criteria of Section 134 and set for hearing after oral argument.

The Commission's rules implementing Section 134 of the NWPA are found in 10 CFR Part 2, Subpart K, ''Hybrid Hearing Procedures for Expansion of Spent Nuclear Fuel Storage Capacity at Civilian Nuclear Power Reactors,'' (published at 50 FR 41662, October 15, 1985). Under those rules, any party to the proceeding may invoke the hybrid hearing procedures by filing with the presiding Officer a written request for oral argument under 10 CFR 2.1109. To be timely, the request must be filed within ten (10) days of an order granting a request for hearing or petition to intervene. (As outlined above, the Commission's rules in 10 CFR Part 2, Subpart G, continue to govern the filing of requests for a hearing or petitions to intervene, as well as the admission of contentions.) The presiding Officer may grant an untimely request for oral argument only upon a showing of good cause by the requesting party for the failure to file on time and after providing the other parties an opportunity to respond to the untimely request. If the presiding Officer grants a request for oral argument, any hearing held on the application shall be conducted in accordance with the hybrid hearing procedures. In essence, those procedures limit the time available for discovery and require that an oral argument be held to determine whether any contentions must be resolved in an adjudicatory hearing. If no party to the proceeding requests oral argument or if all untimely requests for oral argument are denied, then the usual procedures in 10 CFR Part 2, Subpart G, apply.

For further details with respect to this action, see the application dated May 9, 1995, which is available for public inspection at the Commission's Public Document Room, 2120 L Street, NW., Washington, DC 20555, and at the local public document room at the Portland State University, Branford Price Millar Library, 934 SW Harrison Street, Portland, Oregon 97207. The Commission's license and Safety Evaluation Report, when issued, may be inspected at the above locations.

Dated at Rockville, Maryland, this 19 day of April 1996.

For the U.S. Nuclear Regulatory Commission.

William D. Travers,

Director, Spent Fuel Project Office, Office of Nuclear Material Safety and Safeguards.

[FR Doc. 96–10178 Filed 4–24–96; 8:45 am]

BILLING CODE 7590–01–P

[Docket Nos. 50–373, 50–374]

Commonwealth Edison Company (LaSalle County Station, Unit Nos. 1 and 2);

Exemption

I

The Commonwealth Edison Company (ComEd, the licensee) is the holder of Facility Operating License Nos. NPF–11 and NPF–18, which authorize operation of the LaSalle County Station, Units 1 and 2 (the facilities). The licenses provide, among other things, that the facilities are subject to all the rules, regulations, and orders of the U.S. Nuclear Regulatory Commission (the Commission) now or hereafter in effect.

The facilities are boiling water reactors located at the licensee's site in LaSalle County, Illinois.

II

In 10 CFR 73.55, ''Requirements for Physical Protection of Licensed Activities in Nuclear Power Reactors Against Radiological Sabotage,'' paragraph (a), in part, states that ''the licensee shall establish and maintain an onsite physical protection system and security organization which will have as its objective to provide high assurance that activities involving special nuclear material are not inimical to the common defense and security and do not constitute an unreasonable risk to the public health and safety.''

In 10 CFR 73.55(d), ''Access Requirements,'' paragraph (1), it specifies that ''the licensee shall control all points of personnel and vehicle access into a protected area.'' Also, 10 CFR 73.55(d)(5) requires that ''A numbered picture badge identification system shall be used for all individuals who are authorized access to protected areas without escort.'' It further states that individuals not employed by the licensee (e.g., contractors) may be authorized access to protected areas without escort provided that the individual, ''receives a picture badge upon entrance into a protected area which must be returned upon exit from the protected area * * *''

By letter dated February 20, 1996, the licensee requested an exemption from certain requirements of 10 CFR 73.55. The licensee proposes to implement an alternative unescorted access system which would eliminate the need to issue and retrieve picture badges at the entrance/exit location to the protected area and would allow all individuals, including contractors, to keep their picture badges in their possession when departing LaSalle County Station.

III

Pursuant to 10 CFR 73.5, ''Specific exemptions,'' the Commission may, upon application of any interested person or upon its own initiative, grant such exemptions from the requirements of the regulations in this part as it determines are authorized by law and will not endanger life or property or the common defense and security, and are otherwise in the public interest. According to 10 CFR 73.55, the Commission may authorize a licensee to provide alternative measures for protection against radiological sabotage provided the licensee demonstrates that the alternative measures have the same ''high assurance'' objective, that the proposed measures meet the general performance requirements of the regulation, and that the overall level of system performance provides protection against radiological sabotage equivalent to that which would be provided by the regulation.

Currently, unescorted access into the protected area for both employee and contractor personnel into LaSalle County Station, Units 1 and 2, is controlled through the use of picture badges. Positive identification of personnel who are authorized and request access into the protected area is established by security personnel making a visual comparison of the individual requesting access and that individual's picture badge. In accordance with 10 CFR 73.55(d)(5), contractor personnel are not allowed to take their picture badges off site. In addition, in accordance with the plant's physical security plan, the licensee's employees are also not allowed to take their picture badges off site.

The proposed system will require that all individuals with authorized unescorted access have the physical characteristics of their hand (hand geometry) registered with their picture badge number in a computerized access control system. Therefore, all authorized individuals must not only have their picture badge to gain access to the protected area, but must also have their hand geometry confirmed. All individuals, including contractors, who

have authorized unescorted access into the protected area will be allowed to keep their picture badges in their possession when departing the LaSalle County Station.

All other access processes, including search function capability and access revocation, will remain the same. A security officer responsible for access control will continue to be positioned within a bullet-resistant structure. It should also be noted that the proposed system is only for individuals with authorized unescorted access and will not be used for those individuals requiring escorts.

Sandia National Laboratories conducted testing which demonstrated that the hand geometry equipment possesses strong performance characteristics. Details of the testing performed are in the Sandia report, ''A Performance Evaluation of Biometric Identification Devices,'' SAND91—0276 UC—906 Unlimited Release, June 1991. Based on the Sandia report and the licensee's experience using the current photo picture identification system, the false acceptance rate for the proposed hand geometry system would be at least equivalent to that of the current system. To assure that the proposed system will continue to meet the general performance requirements of 10 CFR 73.55(d)(5), the licensee will implement a process for testing the system. The site security plans will also be revised to allow implementation of the hand geometry system and to allow employees and contractors with unescorted access to keep their picture badges in their possession when leaving LaSalle County Station.

IV

For the foregoing reasons, the NRC staff has determined that the proposed alternative measures for protection against radiological sabotage meet the same high assurance objective and the general performance requirements of 10 CFR 73.55. In addition, the staff has determined that the overall level of the proposed system's performance will provide protection against radiological sabotage equivalent to that which is provided by the current system in accordance with 10 CFR 73.55.

Accordingly, the Commission has determined that, pursuant to 10 CFR 73.5, this exemption is authorized by law, will not endanger life or property or common defense and security, and is otherwise in the public interest. Therefore, the Commission hereby grants the following exemption:

The requirement of 10 CFR 73.55(d)(5) that individuals who have been granted unescorted access and are not employed by the licensee are to return their picture badges upon exit from the protected area is no longer necessary. Thus, these individuals may keep their picture badges in their possession upon leaving LaSalle County Station.

Pursuant to 10 CFR 51.32, the Commission has determined that the granting of this exemption will not result in any significant adverse environmental impact (61 FR 17329).

Dated at Rockville, Maryland, this 19th day of April, 1996.

For the Nuclear Regulatory Commission.

Jack W. Roe,

Director, Division of Reactor Projects—III/IV, Office of Nuclear Reactor Regulation.

[FR Doc. 96–10177 Filed 4–24–96; 8:45 am]

BILLING CODE 7590–01–P

OFFICE OF THE UNITED STATES TRADE REPRESENTATIVE

[Docket No. 301–100 and WTO/D–4]

WTO Dispute Settlement Proceedings Concerning the European Communities' Banana Regime

AGENCY: Office of the United States Trade Representative.

ACTION: Notice; request for comments.

SUMMARY: Pursuant to section 127(b)(1) of the Uruguay Round Agreements Act (URAA) (19 U.S.C. 3537(b)(1)), the Office of the United States Trade Representative (USTR) is providing notice that the United States has requested the establishment of a dispute settlement panel under the Agreement Establishing the World Trade Organization (WTO) to examine the regime of the European Communities (EC) for the importation, sale and distribution of bananas. USTR invites written comments from the public concerning the issues raised in the dispute.

DATES: Although USTR will accept any comments received during the course of the dispute settlement proceedings, comments should be submitted on or before May 16, 1996. In order to be assured of timely consideration by USTR in preparing its first written submission to the panel.

ADDRESSES: Comments may be submitted to the Office of the General Counsel, Attn: EC Bananas, Room 223, Office of the U.S. Trade Representative, 600 17th Street, N.W., Washington, DC 20508.

FOR FURTHER INFORMATION CONTACT: Rachel Shub, Assistant General Counsel, Office of the General Counsel, Office of the U.S. Trade Representative, 600 17th Street, N.W., Washington, DC 20508, (202) 395–7305.

SUPPLEMENTARY INFORMATION: On September 27, 1995, the USTR initiated an investigation under Section 302(b) of the Trade Act of 1974 (19 U.S.C. 2412(b)) of the EC's regime for the importation, sale and distribution of bananas (Docket No. 301–100) (60 FR 52026; October 4, 1995). This investigation specifically concerns EC Council Regulation No. 404/93 and related measures discriminating against U.S. marketing companies importing bananas from Latin America, including a restrictive and discriminatory licensing scheme designed to transfer market share to and from U.S. banana marketing firms to firms traditionally trading bananas from African, Caribbean and Pacific sources and from EC territories and dependencies.

Two rounds of WTO consultations with the EC did not result in a resolution of the dispute. Accordingly, on April 11,1 1996, the United States, jointly with the governments of Ecuador, Guatemala, Honduras and Mexico, requested the establishment of a WTO dispute settlement panel to review the EC banana regime. Acting jointly and severally, the United States and the other complaining countries have asked that panel review EC Regulation 404/93 and subsequent EC measures implementing the banana regime (including those reflecting the 1994 Framework Agreement on Bananas between the EC and Colombia, Costa Rica, Nicaragua and Venezuela), and find that they are inconsistent with the following agreements and provisions, among others: (1) Articles I, II, III, X, XI and XIII of the General Agreement on Tariffs and Trade, (2) Articles 1 and 3 of the Agreement on Importing Licensing Procedures, (3) the Agreement on Agriculture, (4) Articles II, XVI and XVII of the General Agreement on Tradein in Services, and (5) Article 2 of the Agreement of Trade-Related Investment Measures.

Members of the panel will be selected after the panel is established by the WTO. The panel is expected to meet as necessary at the WTO headquarters in Geneva, Switzerland to examine the dispute. Under normal circumstances, the panel would be expected to issue a report detailing its findings and recommendations six to nine months after it is established.

Public Comment: Requirements for Submissions

Interested persons are invited to submit written comments concerning the issues raised in the dispute. The provisions of 15 CFR §§ 2006.13(a) and (c) (providing that comments received will be open to public inspection) and

2006.15 will apply to comments received. Comments must be in English and provided in fifteen copies. Pursuant to 15 CFR § 2006.15, confidential business information must be clearly marked ''BUSINESS CONFIDENTIAL'' in a contrasting color ink at the top of each page.

Pursuant to section 127(e) of the URAA, USTR will maintain a public file on this dispute settlement proceeding, which will include a list of comments received, in the USTR Reading Room: Room 101, Office of the Untied States Trade Representative, 600 17th Street, N.W., Washington DC 20508. An appointment to review the docket (Docket WTO/D–3, ''United States—EC: EC Banana Regime''), may be made by calling Brenda Webb, (202) 395–6186. The USTR Reading Room is open to the public from 10 a.m. to 12 noon and 1 p.m. to 4 p.m., Monday through Friday.

Jennifer Hillman,

General Counsel.

[FR Doc. 96–10168 Filed 4–24–96; 8:45 am]

BILLING CODE 3190–01–M

SECURITIES AND EXCHANGE COMMISSION

[Release No. 35–26508]

Filings Under the Public Utility Holding Company Act of 1935, as Amended (''Act'')

April 19, 1996.

Notice is hereby given that the following filing(s) has/have been made with the Commission pursuant to provisions of the Act and rules promulgated thereunder. All interested persons are referred to the application(s) and/or declaration(s) for complete statements of the proposed transaction(s) summarized below. The application(s) and/or declaration(s) and any amendments thereto is/are available for public inspection through the Commission's Office of Public Reference.

Interested persons wishing to comment or request a hearing on the application(s) and/or declaration(s) should submit their views in writing by May 13, 1996, to the Secretary, Securities and Exchange Commission, Washington, D.C. 20549, and serve a copy on the relevant applicant(s) and/or declarant(s) at the address(es) specified below. Proof of service (by affidavit or, in case of an attorney at law, by certificate) should be filed with the request. Any request for hearing shall identify specifically the issues of fact or law that are disputed. A person who so requests will be notified of any hearing, if ordered, and will receive a copy of any notice or order issued in the matter. After said date, the application(s) and/or declaration(s), as filed or as amended, may be granted and/or permitted to become effective.

SEI Holdings, Inc. (70–8823)

SEI Holdings, Inc. (''Holdings''), 900 Ashwood Parkway, Suite No. 500, Atlanta, Georgia, 30338, a wholly-owned non-utility subsidiary of The Southern Company (''Southern''), a registered holding company, has filed an application pursuant to sections 9(a) and 10 of the Act and rule 54 thereunder.

By order dated February 2, 1996 (HCAR No. 26468) (''Order''), Holdings was authorized, through December 31, 2000, to acquire directly, or indirectly through one or more other subsidiaries (''Intermediate Subsidiaries''), the securities of or other interests in one or more energy-related businesses or facilities (''Energy-Related Companies''). The Energy-Related Companies could include companies that derive substantially all of their revenues from brokering or marketing of electric power, provided that the purchaser or seller, or both the purchaser and seller, were located within the Southeastern Electric Reliability Council (''SERC'').[1]

Holdings now requests that the Commission eliminate the restriction imposed under the Order on the geographic region in which such marketing and brokering activities may be conducted. Holdings also requests that the Commission expand the terms of the Order to allow Holdings, through one or more Energy-Related Companies (''Marketing Subsidiaries''), to broker or market other forms of energy commodities, in addition to electric power, to include, without limitation, natural gas, oil and coal, and to provide related services to customers. No other modification to the Order is requested.

In particular, Holdings proposes to engage in wholesale electric power marketing on a national scale. Holdings also proposes to provide related ''value added'' services to customers, such as fuel management, storage and procurement services. Although the Marketing Subsidiaries might acquire physical assets that are necessary and appropriate to the conduct of such business, such as oil and storage facilities, gas reserves, gas pipeline facilities and coal, Holdings represents that no Marketing Subsidiary will acquire any assets if, as a result thereof, it would be or become an ''electric utility company'' or a ''gas utility company'' under the Act.

The Marketing Subsidiaries would engage in various types of marketing activities. These activities would include (i) electric power and/or fuel arbitrage transactions, which involve simple exchanges of fuel for electric power; (ii) dispatch control of energy assets, which involves fixed-price electric power in exchange for dispatch control of electric power generation facilities; (iii) sales of options on capacity or energy; and (iv) national energy supply agreements, which involve retail sales to large energy consumers, with facilities in many different locations, that wish to ''outsource'' all of their energy needs to achieve volume discounts and to eliminate the high cost of separate procurement programs.

Holdings proposes that the Marketing Subsidiaries be authorized to engage in such activities without regard to location or identity of customers provided that the customers exclude the electric public utilities within the Southern system and Southern Company Services, Inc., a subsidiary service company of Southern. Holdings also states that the Marketing Subsidiaries will not sell electric power at retail unless such sale is approved or allowed under applicable state law.

All activities, to include the fuel-for-energy and energy commodity brokering and marketing activities, will generally be carried on by personnel employed by Southern Electric International, Inc., a wholly-owned subsidiary of Holdings. Those personnel are already experienced in the day-to-day electric power marketing activities of Southern Energy and fuel procurement activities of associate independent power projects owned by Holdings.

It is anticipated that in the normal course of business the Marketing Subsidiaries would take appropriate measures to hedge the risk associated with electric power and fuel purchase or sales contracts. Such measures could include matches between long-term firm or variable price electric power sales contracts and long-term firm or variable price fuel purchase contracts. The Marketing Subsidiaries might may also hedge fuel price risk through the

[1] As a practical matter, the ability of Holdings to compete, through Energy-Related Companies in wholesale electric power markets in the Southern system's franchised service territories is limited by the Codes of Conduct submitted to the Federal Energy Regulatory Commission (''FERC'') in connection with the market-based wholesale rate application filed by Southern Energy Marketing, Inc. (''Southern Energy''), a subsidiary of Holdings and an exempt wholesale generator. In addition, under current FERC interpretations of section 32 of the Act, Southern Energy cannot engage in fuel marketing or in other expanded fuel-related activities.

purchase of fuel or fuel reserves or options on fuel reserves.

In addition, the Marketing Subsidiaries might use available hedging tools, such as gas futures contracts and options on gas futures, similar to those traded on the New York Mercantile Exchange, and gas and oil price swap agreements and other, primarily commodity based, derivative instruments. Holdings represents that the Marketing Subsidiaries will not deal in derivative products for purposes of speculative trading.

Holdings might also offset price risk exposure under a purchase or sales contract through an opposite position to that purchase or sale. Similarly, in a portfolio of purchase and sales contracts, risk could also be limited through an appropriate mix of long-term and short-term contracts.

Ultimately, the Marketing Subsidiaries will seek to manage a ''book'' of various energy contracts involving purchases, sales and trades of oil, gas and electric power. The Marketing Subsidiaries will seek to hedge the risk associated with these contracts through a combination of physical assets, balanced physical purchases and sales, purchases and sales on futures markets, or other derivative risk management tools.

The aggregate investment made by Southern to finance the investments of Holdings in the Marketing Subsidiaries will be subject to all of the limitations applicable to investments in Energy-Related Companies imposed by the Order. Similarly, Holdings anticipates that guarantees of performance by the Marketing Subsidiaries could be required from time to time. Holdings will count the amount of such guarantees against the overall limitation set forth in the Order to the extent that the guarantees are directly or indirectly made by Southern itself.

For the Commission, by the Division of Investment Management, pursuant to delegated authority.

Jonathan G. Katz,

Secretary.

[FR Doc. 96–10242 Filed 4–24–96; 8:45 am]

BILLING CODE 8010–01–M

[Release No. 34–37131; File No. SR–NASD–96–08]

Self-Regulatory Organizations; Notice of Filing of Proposed Rule Change by the National Association of Securities Dealers, Inc. Relating to the Quotation of Direct Participation Programs in the OTC Bulletin Board® Service

April 19, 1996.

Pursuant to Section 19(b)(1) of the Securities Exchange Act of 1934 (''Act''),[1] notice is hereby given that on March 12, 1996, the National Association of Securities Dealers Inc. (''NASD'' or ''Association'') filed with the Securities and Exchange Commission (''Commission'') the proposed rule change as described in Items I, II, and III below, which Items have been prepared by the self-regulatory organization. The Commission is publishing this notice to solicit comments on the proposed rule change from interested persons.

I. Self-Regulatory Organization's Statement of the Terms of Substance of the Proposed Rule Change

The NASD is herewith filing a proposed rule change to permit the quotation of Direct Participation Programs (''DPPs'') in the OTC Bulletin Board Service (''OTCBB'' or ''OTC Bulletin Board'') and to require the reporting of transactions in DPPs through the Automated Confirmation Service (''ACT''). The text of the proposed rule change is available at the NASD and at the Commission.[2]

II. Self-Regulatory Organization's Statement of the Purpose of, and Statutory Basis for, the Proposed Rule Change

In its filing with the Commission, the NASD included statements concerning the purpose of and basis for the proposed rule change and discussed any comments it received on the proposed rule change. The text of these statements may be examined at the places specified in Item IV below. The NASD has prepared summaries, set forth in Sections A, B, and C below, of the most significant aspects of such statements.

[1] 15 U.S.C. 78s(b)(1).

[2] Pursuant to a new rule numbering system for the NSDA Manual anticipated to be effective no later than May 1, 1996, the rules that are the subject of this proposed rule change will become Rules 6530, 6540, and 6550 (regarding the OTC Bulletin Board Rules); Rule 6100 (regarding the Automated Confirmation Transaction Service); and new Rule 6900 series (regarding transaction reporting for DPPs). *See* Securities Exchange Act Release No. 36698 (Jan. 11, 1996), 61 FR 1419 (approving new NASD rule numbering system).

A. Self-Regulatory Organization's Statement of the Purpose of, and Statutory Basis for, the Proposed Rule Change

1. Purpose

The purpose of the proposed rule change is to increase transparency and provide for more efficient price discovery in the secondary market for limited partnerships, also known as DPPs, by permitting these securities to be quoted in the OTC Bulletin Board and requiring transactions in DPPs to be reported through ACT.

a. Background

In 1990, at the direction of the NASD's Direct Participation Programs Committee (''Committee''), the staff undertook a study of the nature and functioning of the secondary market for limited partnership securities. Data gathered and interviews conducted during the study revealed that approximately $90 billion was invested in public direct participation programs. The programs were organized to invest in a variety of industries including, but not limited to, real estate, oil and gas, cable television, commodities, and equipment leasing. Although these securities were not intended to be liquid and tradeable, the NASD estimated at that time that approximately two dozen participants act as principal or agent for customers in a fragmented secondary market that in the aggregate transfers ownership of an estimated $250 to $300 million worth of limited partnership securities annually. The NASD noted that the majority of transactions that occur in the market are necessitated by triggering events that force the sale of the partnership unit upon the limited partner. Such events include estate sales by trustees due to the death of a limited partner, liquidation of IRA accounts, divorce, and unexpected or extraordinary expenses such as major medical or post-secondary education. Thus, the inefficiencies of the fragmented market tend to disproportionately impact investors who need liquidity, rather than investors who are merely seeking liquidity.

In response to the developing secondary market, the NASD has directed its regulatory focus to ensuring that NASD members active in the market comply with NASD rules, federal securities laws and state laws relating to advertising and sales literature, suitability and recommendations to customers, solicitation and tender offers, prospectus disclosure, transactions with non-members, net capital, and escrow.

A particular focus has been directed toward rules and policies relating to markups/markdowns and best execution of customer orders that require members to use reasonable diligence to obtain the most favorable price possible under prevailing market conditions. The NASD published its findings on the secondary market in Notice to Members 91–69.

Since the time of that study, the Committee has expressed the view that the NASD's primary concern should continue to focus on ensuring that the secondary market in partnership securities is regulated efficiently and operates in a manner that protects public investors. In furtherance of these goals, the Committee determined that the quotation of DPPs in the OTC Bulletin Board would enhance investor protection and greatly assist the NASD in carrying out its regulatory responsibilities. The OTC Bulletin Board is an electronic quotation medium operated by the Nasdaq Stock Market, Inc. that allows eligible members to enter, update, and retrieve quote information and unpriced indications of interest for non-Nasdaq securities.

b. Tax Status of DPPs

The NASD has long been aware that facilitation of a more centralized means for the quotation of DPPs could cause these securities to be deemed ''publicly traded partnerships'' under the Internal Revenue Code, as that term is defined therein. This would lead to the unintended result of DPPs being treated as corporations for federal tax purposes.

Recently issued IRS regulations, however, have clarified the circumstances under which interests in partnerships may be quoted without impacting their tax status.[3] The proposed rule change reflects the requirement contained in these new regulations, and thus is intended to ensure that the quotation of DPPs in the OTC Bulletin Board would not, by itself, have negative tax status consequences for the issuers of these securities. For example, because the OTC Bulletin board will not disseminate firm buy or sell quotations with respect to partnership interests under the proposed rule change, it would not fall within the definition of an ''interdealer quotation system'' under the new IRS regulations, as that term is defined therein. As a result, such interests in DPPs are not publicly traded for purposes of the IRS Code, provided that the some of the percentage interests in partnership capital or profits transferred during the taxable year of the partnership (subject to certain exclusions) does not exceed two percent (or five percent for grandfathered existing partnerships) of the total interests in capital or profits. It is expected that the monitoring of these two and five percent thresholds will not be the responsibility of the NASD, but will be that of the general partners, who, under most partnership agreements, must approve each transfer of units in the partnership. The NASD, however, will make transaction reporting information available to general partners for a nominal fee to assist them with such compliance.

c. Quotation of DPPs in the OTC Bulletin Board

Generally, the treatment of DPPs quoted in the OTC Bulletin Board will be similar to that of foreign securities and ADRs currently; *i.e.*, no firm prices will be displayed. NASD members will be permitted to insert only non-firm prices or unpriced indications of interest (''bid wanted'' or ''offer wanted'' and ''name only'' entries). These non-firm prices or indications of interest will provide the basis for a negotiation that will take place in order to complete a transaction in a DPP security. The OTCBB display screen will reflect the inside market, last sale, previous close, volume, and distribution information, if available.

In addition, only NASD members will be permitted to apply to place unpriced entries or indicative quotes on the OTC Bulletin Board. The requirements of Securities Exchange Act Rule 15c2–11 will apply, and thus firms generally will be required to submit Form 211 prior to initiating a quotation of a DPP in the OTC Bulletin Board, unless an exemption applies.[4] There will be no provision for any automatic execution for DPPs in the OTCBB.

d. Reporting Transactions in DPPs

Subject to certain exclusions under the reporting requirements, all secondary market transactions in DPPs will be required to be reported to the NASD, without regard to whether the DPP was the subject of a quotation in the OTCBB. Transactions will be reported through ACT for reporting purposes only.[5] Thus, ACT will not be used to facilitate clearance and settlement of these securities notwithstanding the possibility that a particular DPP eligible for inclusion in the OTCBB also may be eligible for clearing with a clearing agency, *e.g.* NSCC, nor will the OTCBB provide assistance to parties in completing the transfer documents and other forms necessary to clear and settle a transaction in a DPP security.[6]

Firms will report on T+1, designating the transaction ''as of'' the previous day and include the time of execution. Member firms that have the operational capability to report transactions within 90 seconds of execution, however, may do so. A symbol directory will be prepared to facilitate transaction reporting in DPPs.

The NASD recognizes that some member firms who participate in this market may not be Nasdaq Workstation subscribers and thus may not have the facility to report transactions through ACT. Members without direct access to ACT will have the option of reporting through the ACT Service Desk if the member averages a limited number of transactions in DPPs.[7] Alternatively, such members may consider obtaining a computer-to-computer interface (''CTCI'') or a Nasdaq Workstation. Members may contact Subscriber Services for further information.

2. Statutory Basis

The NASD believes the proposed rule change is consistent with the provisions of Section 15A(b)(6) of the Act[8] in that it is designed to prevent fraudulent and manipulative acts and practices, to promote just and equitable principles of trade, and, in general, to protect investors and the public interest. Subparagraph (b)(11) of that section authorizes the NASD to adopt rules governing the form and content of quotations for securities traded over-the-counter for the purposes of producing fair and informative quotations, preventing misleading quotations, and promoting orderly procedures for

[3] Section 1.7704–1 has been added to the Income Tax Regulations, (26 CFR Part 1), relating to Section 7704(b) of the Internal Revenue Code, which defines the term ''publicly traded partnership.'' 60 FR 62026 (Dec. 4, 1995).

[4] 17 CFR 240.15c2–11 (governing the initiation or resumption of quotations by a broker-dealer for over-the-counter securities in a non-Nasdaq interdealer quotation medium).

[5] It is understood that members who effect transactions in DPPs predominantly act in the capacity of agent. For reporting purposes, it is expected that the concepts of agency and principal have the same meaning as those terms are commonly used or understood, unless otherwise noted in Rule 6900.

[6] Certain technical corrections have been made to the definition of the term ''ACT eligible security'' to clarify that transactions in Nasdaq SmallCap and certain other OTC securities must be reported through ACT, and to delete an outdated reference to ACT implementation.

[7] As set forth in Rule 6920, a member may use the ACT Service Desk if it averages five or fewer trades per day during the previous calendar quarter. For this purpose, any calculation of the average number of trades per day shall include transactions in any security, and not just DPPs.

[8] 15 U.S.C. 78*o*–3(b)(6).

collecting and disseminating quotations. The proposed rule change would centralize a fragmented market and provide greater transparency, while maintaining certainty with respect to the tax status of these securities. It will provide more efficient price discovery in the secondary market for limited partnerships, and is expected to aid NASD members in complying with their obligations for best execution when effecting transactions.

In addition, the NASD relies on Section 11A(a)(1) of the Act [9] in that the proposed rule change is consistent with the Congressional findings and policy goals, as set forth therein, respecting operational enhancements to the securities markets. Basically, Congress found that new data processing and communications techniques should be applied to improve the efficiency of market operations, broaden the distribution of market information, and foster competition among market participants.

B. Self-Regulatory Organization's Statement on Burden on Competition

The NASD believes the proposed rule change will impose no burden on competition that is not necessary or appropriate in furtherance of the purposes of the Act.

C. Self-Regulatory Organization's Statement on Comments on the Proposed Rule Change Received From Members, Participants, or Others

The NASD has neither solicited nor received written comments.

III. Date of Effectiveness of the Proposed Rule Change and Timing for Commission Action

Within 35 days of the publication of this notice in the Federal Register or within such longer period (i) as the Commission may designate up to 90 days of such date if it finds such longer period to be appropriate and publishes its reasons for so finding or (ii) as to which the self-regulatory organization consents, the Commission will:

(A) by order approve the proposed rule change, or

(B) institute proceedings to determine whether the proposed rule change should be disapproved.

IV. Solicitation of Comments

Interested persons are invited to submit written data, views, and arguments concerning the foregoing. Persons making written submissions should file six copies thereof with the Secretary, Securities and Exchange Commission, 450 Fifth Street, N.W., Washington, D.C. 20549. Copies of the submission, all subsequent amendments, all written statements with respect to the proposed rule change that are filed with the Commission, and all written communications relating to the proposed rule change between the Commission and any person, other than those that may be withheld from the public in accordance with the provisions of 5 U.S.C. § 552, will be available for inspection and copying at the Commission's Public Reference Section, 450 Fifth Street, N.W., Washington, D.C. 20549. Also, copies of such filing will be available for inspection and copying at the principal office of the NASD. All submisssions should refer to File No. SR–NASD–96–08 and should be submitted by May 16, 1996.

For the Commission, by the Division of Market Regulation, pursuant to delegated authority.[10]

Jonathan G. Katz,

Secretary.

[FR Doc. 96–10244 Filed 4–24–96; 8:45 am]

BILLING CODE 8010–01–M

[9] 15 U.S.C. 78k–1.

[10] 17 C.F.R. 200.30–3(a)(12).

[Release No. 34–37123; File No. SR–Phlx–96–03]

Self-Regulatory Organizations; Notice of Filing of Proposed Rule Change and Amendment No. 1 Thereto by the Philadelphia Stock Exchange, Inc. Relating to Component Additions to the Phlx Gold/Silver Index

April 18, 1996.

Pursuant to Section 19(b)(1) of the Securities Exchange Act of 1934 (''Act''), 15 U.S.C. 78s(b)(1), notice is hereby given that on April 1, 1996, the Philadelphia Stock Exchange, Inc. (''Phlx'' or ''Exchange'') filed with the Securities and Exchange Commission (''Commission'') the proposed rule change as described in Items I, II and III below, which Items have been prepared by the self-regulatory organization. On April, 16, 1996, the Exchange filed Amendment No. 1 to the proposal.[1] The Commission is publishing this notice to solicit comments on the proposed rule change, as amended, from interested persons.

I. Self-Regulatory Organization's Statement of the Terms of Substance of the Proposed Rule Change

The Exchange proposes to revise the composition of the Phlx Gold/Silver Index (''XAU'' or ''Index'') by adding three underlying stocks and to adopt a procedure regarding replacements, additions and deletions of component stocks. The text of the proposed rule change is available at the Office of the Secretary, Phlx and at the Commission.

II. Self-Regulatory Organization's Statement of the Purpose of, and Statutory Basis for, the Proposed Rule Change

In its filing with the Commission, Phlx included statements concerning the purpose of and basis for the proposed rule change and discussed any comments it received on the proposed rule change. The text of these statements may be examined at the places specified in Item IV below. The Phlx has prepared summaries, set forth in Sections A, B, and C below, of the most significant aspects of such statements.

A. Self-Regulatory Organization's Statement of the Purpose of, and Statutory Basis for, the Proposed Rule Change

The XAU is a capitalization weighted index currently composed of the stocks of nine widely held U.S. companies in the gold and silver mining industry. Options on the Index have an American style expiration and the settlement value is based on the closing values of the component issues on the last trading day prior to expiration. The Index was the first narrow based or industry index approved for trading on the Exchange.[2] Pursuant to Footnote 10 to the Index Approval Order,[3] the Exchange had agreed to submit to the Commission pursuant to Rule 19b–4 under the Act, any changes to the stocks comprising the Index and to attempt to formulate a rule that will govern this process. Accordingly, pursuant to this rule filing, the Exchange is requesting approval to change the composition of the XAU by adding three stocks. The stocks are AMAX Gold, Inc. (AU), Santa Fe Pacific Gold Corp. (GLD) and TVX Gold Inc. (TVX) and they all currently trade on the New York Stock Exchange. The addition of these three stocks will help ensure an even more accurate response to overall market activity in the precious

[1] In Amendment No. 1 the Phlx states that the Index has always been a P.M. settled index and that it proposes to apply all of the maintenance criteria of Rule 1009(A)(c) except the requirement that the index be designated as A.M. settled. *See* letter from Michele R. Weisbaum, Associate General Counsel, Phlx, to James T. McHale, Attorney, Office of Market Supervision, Division of Market Regulation, Commission, dated April 16, 1996 (''Amendment No. 1'').

[2] *See* Securities Exchange Act Release No. 20437 (December 2, 1983) 48 FR 55229 (December 9, 1983) (''Index Approval Order'').

[3] *Id.*

metals mining industry. The Phlx represents that the proposed change would increase the total capitalization of the Index from $28.63 billion to $32.8 billion. The three additional stocks combined will account for 12.74% of the revised index by capitalization weight. The value of the XAU Index as of the close of trading on March 28, 1996 was 143.83.

Also pursuant to this filing, the Exchange proposes to adopt a procedure which will govern future replacements, additions or deletions of underlying stocks from the Index. If at any time a stock is deleted from the Index due to merger, acquisition or otherwise, and the Exchange determines to replace it, the Phlx will take into account the capitalization, liquidity, volatility and name recognition of any proposed replacement stock which fits the character of the Index. Moreover, the Phlx will ensure that the Index meets all of the maintenance criteria in Rule 1009A(c)[4] except the requirement that the Index be A.M. settled.[5] The Phlx notes that this maintenance criteria, in part, requires it to ensure that no fewer than 90% of the stocks comprising the Index by weight, nor fewer than 80% of the total number of stocks in the Index, qualify as eligible for equity options trading under Phlx Rule 1009.[6] Absent Commission approval, the Exchange will not increase to more than 15, nor decrease to fewer than 9, the number of stocks in the Index.

The Exchange represents that the proposed rule change, as amended, is consistent with Section 6 of the Act in general, and in particular, with Section 6(b)(5), in that it is designed to prevent fraudulent and manipulative acts and practices, to promote just and equitable principles of trade, to foster cooperation and coordination with persons engaged in regulating, clearing, settling, processing information with respect to, and facilitating transactions in securities, to remove impediments to and perfect the mechanism of a free and open market and a national market system, as well as to protect investors and the public interest.

[4] The maintenance criteria set forth in Rule 1009A(c) are principally designed as index maintenance criteria that are required to be met by narrow-based index option products that were listed pursuant to Rule 1009A(b). *See* Securities Exchange Act Release No. 34157 (June 3, 1994), 59 FR 30062 (June 10, 1994).

[5] *See* Amendment No. 1, *supra* note 1.

[6] The three new stocks proposed to be added herein all currently have overlying options being traded.

B. Self-Regulatory Organization's Statement on Burden on Competition

The Exchange believes the proposed rule change will impose no inappropriate burden on competition.

C. Self-Regulatory Organization's Statement on Comments on the Proposed Rule Change Received From Members, Participants or Others

The Exchange has neither solicited nor received written comments on the proposed rule change.

III. Date of Effectiveness of the Proposed Rule Change and Timing for Commission Action

Within 35 days of the publication of this notice in the Federal Register or within such longer period (i) as the Commission may designate up to 90 days of such date if it finds such longer period to be appropriate and publishes its reasons for so finding or (ii) as to which the self-regulatory organization consents, the Commission will:

(A) By order approve the proposed rule change, or

(B) Institute proceedings to determine whether the proposed rule change should be disapproved.

IV. Solicitation of Comments

Interested persons are invited to submit written data, views and arguments concerning the foregoing. Persons making written submissions should file six copies thereof with the Secretary, Securities and Exchange Commission, 450 Fifth Street, N.W., Washington, D.C. 20549. Copies of the submission, all subsequent amendments, all written statements with respect to the proposed rule change that are filed with the Commission, and all written communications relating to the proposed rule change between the Commission and any person, other than those that may be withheld from the public in accordance with the provisions of 5 U.S.C. 552, will be available for inspection and copying at the Commission's Public Reference Section, 450 Fifth Street, N.W., Washington, D.C. 20549. Copies of such filing will also be available for inspection and copying at the principal office of the Phlx. All submissions should refer to File No. SR–Phlx–96–03 and should be submitted by May 16, 1996.

For the Commission, by the Division of Market Regulation, pursuant to delegated authority.[7]

[7] 17 CFR 200.30–3(a)(12).

Margaret H. McFarland,

Deputy Secretary.

[FR Doc. 96–10126 Filed 4–24–96; 8:45 am]

BILLING CODE 8010–01–M

Sunshine Act Meeting

Notice is hereby given, pursuant to the provisions of the Government in the Sunshine Act, Pub. L. 94–409, that the Securities and Exchange Commission will hold the following meeting during the week of April 29, 1996.

Commissioners, Counsel to the Commissioners, the Secretary to the Commission, and recording secretaries will attend the closed meeting. Certain staff members who have an interest in the matters may also be present.

The General Counsel of the Commission, or his designee, has certified that, in his opinion, one or more of the exemptions set forth in 5 U.S.C. 552b(c) (4), (8), (9)(A) and (10) and 17 CFR 200.402(a) (4), (8), (9)(i) and (10), permit consideration of the scheduled matters at the closed meeting.

Commissioner Johnson, as duty officer, voted to consider the items listed for the closed meeting in a closed session.

The subject matter of the closed meeting scheduled for Tuesday, April 30, 1996, at 10 a.m., will be:

Institution and settlement of administrative proceedings of an enforcement nature.

Formal order of investigation.

Opinion.

At times, changes in Commission priorities require alterations in the scheduling of meeting items. For further information and to ascertain what, if any, matters have been added, deleted or postponed, please contact: The Office of the Secretary at (202) 942–7070.

Dated: April 23, 1996.

Jonathan G. Katz,

Secretary.

[FR Doc. 96–10354 Filed 4–23–96; 1:05 pm]

BILLING CODE 8010–01–M

SELECTIVE SERVICE SYSTEM

Forms Submitted to the Office of Management and Budget for Extension of Clearance

The following forms have been submitted to the Office of Management and Budget (OMB) for extension of clearance in compliance with the Paperwork Reduction Act (44 U.S. Chapter 55).

SSS–1

Title: The Selective Service System Registration Form.

Need and/or Use: Is used to establish a data base for use in supplying manpower to the military services during a military emergency.

Respondents: All 18 year old males who are United States citizens and those male aliens residing in the United States at the time of their 18th birthday are required to register with the Selective Service System.

Frequency: Registration with the Selective Service System is a one-time occurrence.

Burden: A burden of 2 minutes or less on the individual respondent.

Copies of the above identified forms can be obtained upon written request to: Selective Service System, Reports Clearance Officer, 1515 Wilson Boulevard, Arlington, Virginia, 22209–2425.

Written comments and recommendations for the proposed extension of clearance of the forms should be sent within 30 days of publication of this notice, to: Selective Service System, Reports Clearance Officer, 1515 Wislon Boulevard, Arlington, Virginia, 22209–2425.

A copy of the comments should be sent to: Office of Information and Regulatory Affairs, Attention: Desk Officer, Selective Service System, Office of Management and Budget, New Executive Office Building, Room 3235, Washington, D.C. 20503.

Dated: April 11, 1996.

Gil Coronado,

Director.

[FR Doc. 96–10257 Filed 4–24–96; 8:45 am]

BILLING CODE 8015–01–M

DEPARTMENT OF STATE

[Public Notice No. 2369]

Shipping Coordinating Committee International Maritime Organization (IMO) Legal Committee; Notice of Meeting

The U.S. Shipping Coordinating Committee (SHC) will conduct an open meeting at 10:00 a.m., on Thursday, May 30, 1996, in Room 2416 of U.S. Coast Guard Headquarters, 2100 Second Street, S.W., Washington, D.C. The purpose of this meeting is to report the results of the diplomatic conference convened by the International Maritime Organization (IMO) that considered adoption of both an International Convention on Liability and Compensation for Damage in Connection with the Carriage of Hazardous and Noxious Substances by Sea (HNS Convention) and a Protocol to amend the International Convention on Limitation of Liability for Maritime Claims (76 LLMC).

To facilitate the attendance of those participants who may be interested in only certain aspects of the public meeting, the first item addressed will be the HNS Convention. At approximately 11:30 a.m., there will be a discussion of the results of the diplomatic conference with respect to the Protocol to the 76 LLMC.

Members of the public are invited to attend the SHC meeting, up to the seating capacity of the room. For further information, for copies of the conference drafts of these instruments or other conference documents, or to submit views concerning the subjects of discussion, contact either Captain David J. Kantor or Lieutenant Commander Bruce P. Dalcher, U.S. Coast Guard (G–LMI), 2100 Second Street, S.W., Washington, D.C. 20593, telephone (202) 267–1527, telefax (202) 267–4496.

Dated: April 10, 1996.

Charles A. Mast,

Chairman, Shipping Coordinating Committee.

[FR Doc. 96–10161 Filed 4–24–96; 8:45 am]

BILLING CODE 4710–07–M

[Public Notice No. 2370]

Shipping Coordinating Committee Subcommittee on Safety of Life at Sea Working Group on Safety of Navigation; Notice of Meeting

The Working Group on Safety of Navigation of the Subcommittee on Safety of Life at Sea (SOLAS) will conduct an open meeting at 9:30 a.m. on Tuesday, June 4, 1996, in room 4315, U.S. Coast Guard Headquarters, 2100 Second Street, S.W., Washington, DC.

The purpose of the meeting is to prepare for the 42nd session of the Subcommittee on Safety of Navigation (NAV) of the International Maritime Organization (IMO) and which is scheduled for July 15–19, 1996, at the IMO Headquarters in London.

Items of principal interest on the agenda are:

—Role of the human element in maritime casualties
—Routing of ships and related matters
—Vessel traffic services (VTS) and ship reporting
—Development of measures complementary to the Code for Safe Carriage of Irradiated Nuclear Fuel (INF)
—Navigational aids and related matters
—International Telecommunication Union (ITU) matters
—Revision of SOLAS chapter V
—Code for safe navigation and watchkeeping
—Ergonomic criteria for bridge equipment and layout
—Roll-on roll-off (Ro-Ro) ferry safety
—International Code of Signals
—Special signal for use by ships under attack or threat of attack by pirates and armed robbers
—Review of World Meteorological Organization (WMO) handbooks on navigation in areas affected by sea-ice
—Standard marine communication phrases
—Removal of wrecks and towage of offshore installations, structures, and platforms
—Operational aspects of wing in ground (WIG) craft
—Safety of passenger submersible craft
—Review and revision of resolution A.244(VII)—Cooperation with Intergovernmental Oceanographic Commission

Members of the public may attend these meetings up to the seating capacity of the room. Interested persons may seek information by writing: Mr. Edward J. LaRue, Jr., U.S. Coast Guard (G–MVO–3), Room 1409, 2100 Second Street SW., Washington, DC 20593–0001 or by calling: (202) 267–0416.

Dated: April 15, 1996.

Charles A. Mast,

Chairman, Shipping Coordinating Committee.

[FR Doc. 96–10160 Filed 4–24–96; 8:45 am]

BILLING CODE 4710–07–M

[Public Notice No. 2371]

Shipping Coordinating Committee; Subcommittee on Safety of Life at Sea Working Group on Radiocommunications and Search and Rescue; Notice of Meetings

The Working Group on Radiocommunications and Search and Rescue of the Subcommittee on Safety of Life at Sea will conduct open meetings at 9:30 AM on Wednesday, August 21, September 18, October 16, November 20, December 18, 1996, January 15, and February 19, 1997. These meetings will be held in the Department of Transportation Headquarters Building, 400 Seventh Street, S.W., Washington, DC 20950. The purpose of these meetings is to prepare for the Second Session of the International Maritime Organization (IMO) Subcommittee on Radiocommunications and Search and Rescue which is scheduled for the week of January 27, 1997, at the IMO headquarters in London, England. Results of the Second Session will be discussed at the February 19, 1997, meeting.

Among other things, the items of particular interest are:

—The implementation of the Global Maritime Distress and Safety System (GMDSS).

—Maritime Search and Rescue matters.

Further information, including meeting agendas with meeting room numbers, minutes, and input papers, can be obtained from the Coast Guard Navigation Information Center computer bulletin board, accessible by modem by dialing: (703) 313–5910. This information is also accessible through Internet World Wide Web by entering: ''http://www.navcen.uscg.mil/marcomms/imo/imo.htm''

Members of the public may attend these meeting sup to the seating capacity of the rooms. Interested persons may seek information, including meeting room numbers, by writing: Mr. Ronald J. Grandmaison, U.S. Coast Guard Headquarters, Commandant (G–STM–2), Room 6509, 2100 Second Street, S.W., Washington, DC 20593–0001, by calling: (202) 267–1389, or by sending Internet electronic mail to r.grandmaison/g-e@mailgatehq.comdt.uscg.mil.

Dated: April 15, 1996.

Charles A. Mast,

Chairman, Shipping Coordinating Committee.

[FR Doc. 96–10158 Filed 4–24–96; 8:45 am]

BILLING CODE 4710–07–M

DEPARTMENT OF TRANSPORTATION

Coast Guard

[CGD 95–089]

Interim Report on Tank Vessel Design, Construction, and Operation Under the Oil Pollution Act of 1990

AGENCY: Coast Guard, DOT.

ACTION: Notice of availability of interim report; request for public comments.

SUMMARY: The Coast Guard announces the availability of an interim report concerning the impact of the provisions of the Oil Pollution Act of 1990 (OPA 90) relating to tank vessel design, construction, and operation on the safety of the marine environment and the economic viability and operational makeup of the maritime oil transportation industry. The interim report was prepared by a committee under the National Research Council and describes the committee's work to date and the availability of data. In addition, the committee is seeking comments and additional information on certain issues to assist it in preparing a final report, required by OPA 90, for submission by the Coast Guard to Congress.

DATES: Comments must be received no later than May 30, 1996. In order to provide adequate time to review the interim report, it is recommended that requests for copies of the report be made on or before May 10, 1996.

ADDRESSES: Comments may be mailed to the Marine Board, National Research Council, 2101 Constitution Avenue, HA 250, Washington, DC 20418, ATTN: Mr. Donald Perkins. A copy of the interim report may be requested by writing Commandant (G–MES), U.S. Coast Guard Headquarters, 2100 Second Street SW., Washington, DC 20593–0001, by calling (202) 267–1044 between 8 a.m. and 3 p.m., Monday through Friday, except Federal holidays, or by facsimile at (202) 267–4624. The report is available on the World Wide Web at: http://www.starsoftware.com/uscgnmc/nmc/.

FOR FURTHER INFORMATION CONTACT: Mr. Jack Klingel, Standards Evaluation and Development Division (G–MES), (202) 267–1044, or Mr. Jaideep Sirkar, Design and Engineering Standards Division (G–MMS–2), (202) 267–6925, U.S. Coast Guard Headquarters, 2100 Second Street SW., Washington, DC 20593–0001.

SUPPLEMENTARY INFORMATION:

Background

Under the Oil Pollution Act of 1990 (OPA 90), the Secretary of Transportation (Coast Guard) is required (1) To assess the impact of the provisions of OPA 90 relating to double hulls for tank vessels on the safety of the marine environment and the economic viability and operational makeup of the maritime oil transportation industry and (2) to report the results of its assessment to Congress, with recommendations for legislative or other action (OPA 90, Sec. 4115(e)(2) (B) and (C); Note to 46 U.S.C. 3703a). To assist it in preparing the report, the Coast Guard requested advice in preparing this report from the National Research Council. Accordingly, the Marine Board of the National Research Council established the ''Committee on Oil Pollution Act of 1990 (section 4115) Implementation Review'' (the Committee). The Committee will assess the impact of the double hull and related provisions of OPA 90 on (1) The safety of the marine environment, (2) the economic viability of the maritime oil transportation industry, (3) the operational makeup of the maritime oil transportation industry, and (4) the influence of international conventions on tank vessel design and operational activities. In this regard, the Committee has undertaken a methodical data gathering process, which includes input from written surveys, industry representatives and databases, and various Federal agencies involved in the promulgation of regulations. This notice of availability of the interim report and request for comments is one element within this data gathering process. While the Committee has compiled significant amounts of data and information and analysis, an independent solicitation of public comment over and above the public comment processes for the related Coast Guard regulatory projects may add significant value to the deliberations of the Committee.

With some exceptions, section 4115 of OPA 90 requires that oil tank vessels operating on waters subject to the jurisdiction of the United States have double hulls. It also provides for a 25-year phase-in period under certain circumstances.

Related Rulemakings

The Coast Guard has had several rulemaking projects concerning the design, construction, and operation of tank vessels under section 4115 of OPA 90. Comments submitted to the Coast Guard under these rulemakings have been made available to the Committee and need not be re-submitted in response to this request for comments.

Questions

The Coast Guard requests comments on the interim report and further information on the issues addressed in the report. The Committee has prepared, and is seeking answers to, the following questions:

1. Has the quality of the tanker fleet serving U.S. ports changed as a result of the passage of OPA 90? Can you attribute these changes to section 4115 of OPA 90?

2. What is the anticipated impact resulting from MARPOL 73/78, Annex I, Regulations 13F and 13G, on ship safety and the reduction of pollution into the marine environment?

3. What has been the impact of increased port state control activities designed to improve ship safety and reduce pollution into the marine environment?

4. What is the anticipated impact of enhanced survey requirements of MARPOL 73/78, Annex I, Regulation 13G, on ship safety and the reduction of pollution into the marine environment?

5. What information can you provide that indicates double hull vessels have affected marine safety and reduced pollution into the marine environment?

6. Have changes in vetting and other management practices been instituted since the passage of OPA 90? Have these changes been made as a direct result of section 4115 of OPA 90? What impact have these changes had on ship safety and the reduction of pollution into the marine environment?

7. What is your experience with the operational safety of double hull tank vessels in regard to stability during loading and discharge, safe access to ballast spaces, ventilation of ballast spaces, salvage, and other safety issues?

8. What is your inspection and maintenance experience in regard to corrosion protection and structural performance of double hull tank vessels?

9. Have you had any structural problems on double hull tank vessels?

10. What design changes would you suggest in double hull tank vessels?

11. Based on your experience, what are the advantages and disadvantages of double hull tank vessels as compared to single hull tank vessels?

12. Has OPA 90, section 4115, forced the retirement of single hull tank vessels earlier than desired or expected? If so, how much earlier and for what specific reason?

13. How do maintenance and operating costs differ between double hull and single hull tankers? Are higher costs anticipated for maintaining internal tank coatings? Manning and training requirements? Insurance? Drydocking and other maintenance and repair costs?

14. To what extent will pre-MARPOL tankers be modified to meet MARPOL's requirements for protectively located/segregated ballast tanks in order to gain additional life in the Regulation 13G retirement schedule?

15. Will MARPOL tankers in the international trade operate for the full 30 year limit or retire early? If they retire early, how much earlier?

16. Has the phase-out schedule for single hull tankers in OPA 90 affected the ability of shipping companies to finance replacement vessels? If so, how?

17. Has a two-tiered market developed in which double hull tank vessels receive higher freight rates than single hull tank vessels? If so, what is the difference? If not, will such a two-tiered market develop in the future?

18. To what extent will existing tank vessels without double hulls be reconstructed to comply with the double hull requirements of OPA 90 section 4115? At what cost? (Jones Act and international trades.)

19. Coast Guard lightering regulations permit the use of certain single hull vessels in specified lightering zones within U.S. territorial waters until 2015, five years beyond the mandated double hull conversion schedule of OPA 90, section 4115. What is the potential impact of the lightering regulations on the use of single hull vessels in U.S. waters?

Dated: April 18, 1996.

Joseph J. Angelo,

Director for Standards, Marine Safety and Environmental Protection.

[FR Doc. 96–10256 Filed 4–24–96; 8:45 am]

BILLING CODE 4910–14–M

Federal Aviation Administration

Notice of Availability, Final Environmental Impact Statement; Master Plan Update, Syracuse-Hancock International Airport, Syracuse, New York

AGENCY: Federal Aviation Administration.

The City of Syracuse, Department of Aviation, owner and operator of Syracuse-Hancock International Airport, has prepared a Master Plan update for the airport. As part of the Plan, it was determined that a runway parallel to Runway 10–28 would be needed to accommodate the anticipated aviation demand and to allow for necessary temporary closures to existing Runway 10–28. The proposed project is the acquisition of approximately 220 acres of land located primarily northeast of the airport to provide a site for the construction of Runway 10L–28R parallel to, 3,600 ft. north of, and 1,400 ft. east of existing Runway 10–28.

A Final Environmental Impact Statement (FEIS) has been prepared by the FAA and the City of Syracuse which assesses the impact of alternative airport improvements. In the first phase of development, a runway 7,500 ft. long and 150 ft. wide would be constructed. In the second phase of development, the runway would be extended to an ultimate length of 9,000 ft. The 3,600 ft. lateral separation between the parallel runways would provide the capability to accommodate dual simultaneous ILS approaches to these runways.

Copies of the FEIS are available for review at the following locations:

Federal Aviation Administration, Airports Division, Regional Office, Fitzgerald Federal Building, JFK Int'l Airport, Jamaica, NY 11430. FAA Contact person is Mr. Frank Squeglia, Environmental Specialist (718) 553–3325.

City of Syracuse, Department of Aviation, Syracuse-Hancock International Airport, Main Terminal Building, 2nd Floor Syracuse, New York 13212. City Contact person is Mr. Charles Everett, Jr., Commissioner (315) 454–3263.

Town of Clay, Zoning Dept., 4483 Route 31, Clay, New York 13041.

Town of Cicero, Zoning Dept., 8326 S. Main St., Cicero, New York 13039.

Town of Dewitt, Zoning Dept., 5400 Butternut Dr., Dewitt, New York 13214.

Town of Salina, Zoning Dept., 201 School Rd., Liverpool, New York 13088.

Syracuse University, Byrd Library, 222 Waverly Ave., Syracuse, New York 13210.

Onondaga Co. Public Library, 447 S. Salina St., Galleries Mall, Syracuse, New York 13202.

Comments on the FEIS must be received within 30 days from the publication date of this Notice and addressed to both the FAA and City of Syracuse at the above addresses. All substantive comments will be considered in the FAA Record of Decision (ROD) which will conclude the environmental process for this Federal action.

Issued in Jamaica, New York on April 12, 1996.

Anthony P. Spera,

Acting Manager, Airports Division, Federal Aviation Administration, Eastern Region.

[FR Doc. 96–9961 Filed 4–24–96; 8:45 am]

BILLING CODE 4910–13–M

Office of the Secretary of Transportation

[Docket No. OST–96–1288]

Comprehensive Truck Size and Weight Study: Analytical Framework and Outreach Plan

AGENCY: Department of Transportation, Office of the Secretary (OST).

ACTION: Notice; request for comments.

SUMMARY: This notice provides an update on the options analysis framework approved by the DOT Policy Oversight Group for the DOT Comprehensive TS&W Study and requests comments on this framework. Plans are outlined for informational focus sessions to explain how the study is being conducted and to obtain direct comment from constituent groups.

DATES: To be timely for consideration for either the analytical framework or outreach plans for the study, comments should be received on or before May 28, 1996. However, this docket will remain open until the study is completed. FHWA Docket No. 95–5 also will

remain open until completion of the study.

ADDRESSES: Submit written, signed comments to Docket No. OST–96–1288, the Docket Clerk, U.S. Department of Transportation, Room PL–401, C–55, 400 Seventh Street, S.W., Washington, D.C. 20590. All comments received will be available for examination at the above address between 9:00 a.m. and 5:00 p.m., ET, Monday through Friday, except Federal holidays. Those desiring notification of receipt of comments must include a self-addressed, stamped envelope or postcard.

FOR FURTHER INFORMATION CONTACT: Ms. Cynthia Elliot, Office of Policy Development, FHWA, at (202) 366–8707; Mr. Carl Swerdloff, Office of Economics, Office of the Secretary, DOT, at (202) 366–5427; Ms. Jill Hochman, Office of Motor Carrier Information Analysis, at (202) 366–1861; or Mr. Charles Medalen, Office of Chief Counsel, at (202) 366–1354, FHWA, 400 Seventh Street, S.W., Washington, D.C. 20590. Office hours are from 7:45 a.m. to 4:15 p.m., e.t., Monday through Friday, except Federal holidays.

SUPPLEMENTARY INFORMATION: In June 1995, the Secretary established the Policy Oversight Group (POG), chaired by Assistant Secretary for Transportation Policy, Frank E. Kruesi, to ensure major decisions guiding the Comprehensive Truck Size and Weight (TS&W) Study would be made on an intermodal basis and to coordinate the TS&W Study with the Highway Cost Allocation Study. The POG includes policy level representatives from the offices of the Associate Deputy Secretary and Director of the Office of Intermodalism, the Assistant Secretary for Budget and Programs, and the Assistant Secretary for Governmental Affairs, FHWA, Federal Railroad Administration, National Highway Traffic Safety Administration, Maritime Administration, Federal Transit Administration, and Bureau of Transportation Statistics (see August, 30, 1995 Federal Register). After extensive review and discussion, the POG has formulated and approved an options analysis framework for the TS&W Study consisting of three parts: technical building blocks, policy approaches, and illustrative scenarios. For further information on the Comprehensive Truck Size and Weight Study, please refer to the February 2, 1995 and August 30, 1995 Federal Register notices and submissions to FHWA Docket No. 95–5. For information on the Highway Cost Allocation Study, please refer to the February 10, 1995 Federal Register notice and to submissions to FHWA Docket No. 95–6.

This analytical framework is designed as a structure for gathering information, such as safety, environmental, economic, traffic operations, modal diversion, and bridge and pavement impacts, about significant truck configurations that have been suggested in previous studies (including the ''Report of the Subcommittee on Truck Size and Weight of the American Association of State Highway and Transportation Officials (AASHTO) Joint Committee on Domestic Freight Policy'' (AASHTO, June, 1995), ''Truck Weight Limits'' (Transportation Research Board (TRB), 1990), ''New Trucks for Greater Productivity and Less Road Wear, an Evaluation of the Turner Proposal'' (TRB, 1990), and ''Longer Combination Vehicle Operations in Western States'' (DOT, 1986)), or may emerge in the current policy environment. The framework is conceived as a flexible tool for examining the wide range of TS&W options, from more restrictive to more liberal, that may receive legislative consideration now or in the future. With periodic updates in data or methodologies, this framework will ensure that the Department can respond to significant TS&W proposals without embarking on a separate, new study for each proposal. Public comment on this framework is invited.

Building Blocks

Technical building blocks analyzing a broad range of truck configurations at varying gross vehicle weights provide the foundation for the analytical framework. These configurations include three- and four-axle single unit trucks, five- and six-axle semitrailers, 28-foot doubles, intermediate length (31- to 33-foot) doubles, and longer combination vehicles. An evaluation will be conducted for each configuration in relation to various highway system(s)—the Eisenhower National System of Interstate and Defense Highways (Interstate System), the National Network (NN) for trucks, the National Highway System (NHS), and a limited system of highways tailored for the operation of longer combination vehicles—on which the configuration operates now or might be proposed to operate. Operations of each configuration also will be examined, as appropriate, in relation to major geographic considerations for that configuration—national, regional, and state. In addition, configurations will be analyzed at operating weights which vary according to different assumptions about axle weight and bridge formula restrictions. These analytical building blocks are represented in the matrix below:

TS&W ANALYTICAL BUILDING BLOCKS BY CONFIGURATION, SYSTEM, AND GEOGRAPHY

Configuration	Maximum gross weight range (in pounds)	Highway system				Geography		
		Interstate system	National network	National highway system	Limited* systems for LCV's	National	Regional	State
Single Unit Truck	54,000–68,000	X	X	X	.....	.....	X	X
Semitrailer	80,000–97,000	X	X	X	.....	X	X	X
Double 28 to 28½ ft. Trailer	80,000–111,000	X	X	X	.....	X	X	X
Intermediate Length (31–33 ft.) Double	105,500–128,000	X	.....	X	.....	X	X	.....
Longer Combination Vehicles	105,500–148,000	.....	.....	.....	X	X	X	.....

*Highways on which LCV's currently operate or might be proposed to operate.

Evaluation of possible regulations pertaining to a variety of configurations, such as elimination of grandfather provisions, freezing weight limits on the NHS, limiting trailer and semitrailer lengths to 53 feet, and lifting the longer combination vehicle freeze also will be examined.

The inclusion of a configuration at a gross vehicle weight limit or on a certain network in the building blocks for analysis does not imply a predisposition of the DOT to its adoption. In response to Congressional direction to conduct a thorough and

comprehensive study, a wide range of configurations are being evaluated to understand the impacts of keeping their operations strictly at current limits as well as restricting or expanding their operations. As a result of the study, if the Department makes recommendations for changes in truck size and weight limitations, such recommendations would be submitted to Congress for legislative consideration.

Policy Analysis

A Notice of Proposed Policy for a Freight Policy Statement setting forth a policy context for important decisions affecting freight transportation across all modes was published in the Federal Register on April 2, 1996. The second part of the TS&W analytical framework will focus directly on such major policy considerations. DOT's draft Freight Policy Statement presents important principles for all freight-related decisionmaking which must be applied to the TS&W context. The POG will be establishing impact measures for the study derived from the Freight Policy Statement, and these will be used in the Policy Analysis section of the overall analytical framework.

In addition, the TS&W study will examine Federal and state role issues; important international concerns, such as overweight container movements; and potential alternative regulatory approaches. At least four policy approaches will receive extensive study: (1) the implications of the existing TS&W regulatory regime; (2) implications of expanding Federal controls on the NHS; (3) issues involved in increased state authority in TS&W regulation, and (4) international considerations affecting TS&W.

Illustrative Options

When all the information required by the building block and policy analysis is developed, the study will examine a few initial scenarios to demonstrate how the full analysis framework is applied. Within each broad policy approach noted above, the POG has selected one or two illustrative scenarios for full analysis in order to demonstrate their full range of impacts and associated costs and benefits. The scenarios selected by the POG for full analysis are not DOT recommendations, but do illustrate proposals to which DOT might be asked to respond in the future. Because the TS&W analytical framework is flexible and includes many building blocks, other scenarios could be fully analyzed in the future as well.

Illustrative scenarios selected for complete analysis include the following:

1. Status Quo. This scenario serves as a baseline for other scenarios and retains all features of current law, including the ISTEA freeze. Federal size limits (102-inch maximum vehicle width, 48-foot minimum semitrailer length, and 28-foot minimum trailer length for double-trailer combinations) remain on Interstate and designated highways (the National Network). The size limits would not apply to NHS highways not already designated as NN highways under the STAA of 1982. Federal weight limits (20,000-pound single- and 34,000-pound tandem-axle limits, 80,000-pound cap, and Bridge Formula B) remain on Interstate highways as do existing grandfather rights. Operation of LCV's (any combination of a truck tractor or semitrailers carrying more than 80,000 pounds) on the Interstate Highway System are restricted to what was in use as of June 1, 1991. Operation of commercial motor vehicle combinations with two or more cargo-carrying units on the NN is restricted to what was in use on June 1, 1991, subject to state restrictions on that date.

2. Expanded Federal Control of TS&W on the NHS. This approach focuses on a special Federal role on the NHS in recognition of its importance for interstate and international commerce. The following scenarios would be examined in detail:

a. Restrict weights on non-Interstate portions of the NHS to Federal limits but grandfather currently higher state weight limits on the NHS, and (2) restrict semitrailer lengths on the NHS to a maximum of 53 feet but grandfather operation of existing semitrailers greater than 53 feet in length on the NHS where they may now legally operate.

b. Extend Federal STAA size limits (102-inch maximum vehicle width, 48-foot minimum semitrailer length, and 28-foot minimum trailer length for double-trailer combinations) to the entire NHS. No state could exclude such vehicles from the NHS. The 80,000 pound GVW limit would remain in place on the Interstate System except where higher limits have been grandfathered.

3. Increasing State Flexibility. This approach would increase state flexibility in controlling truck size and weight on all highway systems. The following illustrative scenarios would be evaluated in detail:

a. Lift the Longer Combination Vehicle freeze which restricts the operation of LCV's on the Interstate and NN highway systems to those that were in use on or before June 1, 1991. All other Federal size and weight controls would remain. Included in the analysis are two different assumptions: (1) states retain authority to determine the extent of grandfather rights, and (2) grandfather authority is determined at the Federal level.

b. Replace grandfather provisions with federally regulated, state voluntary permit programs for operation of combinations over 80,000 lbs. GVW. Federal safety and infrastructure standards for operation of these vehicles would be established. Federal axle and bridge controls would remain.

4. International Considerations. This approach focuses on continuing concern about overweight international container movements. DOT would evaluate one scenario in which states would be required to allow use of a six-axle tractor-semitrailer combination at a gross weight limit of 97,000 pounds (for this configuration only). This scenario assumes establishing axle weight limits to avoid over-stressing bridges and establishing minimum Federal safety standards for operation of these vehicles. Two alternative systems would be examined requiring states to allow this vehicle on: (1) the Interstate System only, and (2) the entire NHS.

Outreach

Two public meetings to obtain comment on the TS&W Study were held in Denver, Colorado, and Washington, D.C., in the spring of 1995. Since that time, public outreach has been conducted through requests for comment in the Federal Register and on an informal basis with the most readily identifiable members of TS&W constituent communities. Public contact has included open, informal technical briefings, meetings with national and regional interest groups, and Congressional briefings. To complement these efforts and ensure better understanding of the many technical and innovative elements of DOT's TS&W study activities, DOT will conduct four regional TS&W focus sessions. These informational focus sessions will highlight the wide range of efforts encompassed in the study and provide for greater public input. They will be aimed at reaching major constituencies and experts across the nation who have knowledge of these issues and will present information on major TS&W study elements and the options analytical framework. Focus sessions now are being planned for four geographically diverse cities. These sessions will be kept to a relatively small size to facilitate discussion and information exchange, although there will be some limited capacity to accommodate others who wish to attend.

In addition, DOT will continue to hold open, informal technical briefings by specialists directly working on specific segments of the TS&W effort. DOT has held three such briefings—on preliminary results of Truck Inventory and Use Survey analysis, on intermodal diversion analysis and on domestic and international freight trends. Individuals attending these briefings have indicated that they gain useful insight into the methodologies being used in the study and that the briefings provide an opportunity to get detailed answers to their questions.

DOT also will make available executive summaries of individual study reports as they are completed and brief written updates on progress of the study. Parties interested in being placed on a mailing list for technical briefing announcements, executive summaries, and periodic updates should provide their name and address to any of the DOT contacts noted above. Distribution of TS&W study report summaries and updates over the Internet also are being planned. DOT will continue to provide updates on its TS&W study at meetings and conferences held by government, safety, industry, research, and other groups as requested.

Issued in Washington, D.C. on April 19, 1996.

Frank E. Kruesi,

Assistant Secretary for Transportation Policy.

[FR Doc. 96–10278 Filed 4–24–96; 8:45 am]

BILLING CODE 4910–62–P

Federal Aviation Administration

RTCA, Inc.; Technical Management Committee

Pursuant to section 10(a)(2) of the Federal Advisory Committee Act (P.L. 92–463, 5 U.S.C., Appendix 2), notice is hereby given for the RTCA Technical Management Committee meeting to be held May 10, 1996, starting at 9:00 a.m. The meeting will be held at RTCA, Inc., 1140 Connecticut Avenue, N.W., Suite 1020, Washington, DC, 20036.

The agenda will include: (1) Chairman's Remarks; (2) Review and Approval of Summary of the Previous Meeting; (3) Systems Management Working Group Report to the Technical Management Committee; (4) Consider and Approve: a. RTCA course of action concerning activities relating to EUROCAE Working Group 52; b. Course of action concerning white paper on required system performance; c. Terms of reference and chairman for new special committee concerned with developing FANS systems requirements and objectives; (5) Take Action on Open Items from Previous Meeting; (6) Other Business; (7) Date and Place of Next Meeting.

Attendance is open to the interested public but limited to space availability. With the approval of the chairman, members of the public may present oral statements or obtain information should contact the RTCA Secretariat, 1140 Connecticut Avenue, N.W., Suite 1020, Washington, D.C. 20036; (202) 833–9339 (phone) or (202) 833–9434 (fax). Members of the public may present a written statement to the committee at any time.

Issued in Washington, D.C., on April 19, 1996.

Janice L. Peters,

Designated Official.

[FR Doc. 96–10123 Filed 4–24–96; 8:45 am]

BILLING CODE 4910–13–M

RTCA, Inc.; Special Committee 187; Mode Select Beacon and Data Link System

Pursuant to section 10(a)(2) of the Federal Advisory Committee Act (P.L. 92–463, 5 U.S.C., Appendix 2), notice is hereby given for Special Committee 187 meeting to be held on May 14, 1996, starting at 9:00 a.m. The meeting will be held at RTCA, 1140 Connecticut Avenue, N.W., Suite 1020, Washington, DC 20036.

The agenda will be as follows: (1) Introductory Remarks; (2) Review and Approval of the Agenda; (3) Review and Approval of the Summary of the Previous Meeting; (4) Complete the Review of Change 2 to RTCA/DO–181A; (5) Detailed Review of Change 1 to RTCA/DO–218; (6) Other Business; (7) Date and Place of Next Meeting.

Attendance is open to the interested public but limited to space availability. With the approval of the chairman, members of the public may present oral statements at the meeting. Persons wishing to present statements or obtain information should contact the RTCA Secretariat, 1140 Connecticut Avenue, N.W., Suite 1020, Washington, D.C. 20036; (202) 833–9339 (phone) or (202) 833–9434 (fax). Members of the public may present a written statement to the committee at any time.

Issued in Washington, D.C., on April 19, 1996.

Janice L. Peters,

Designated Official.

[FR Doc. 96–10124 Filed 4–24–96; 8:45 am]

BILLING CODE 4910–13–M

Maritime Administration

[Docket S–936]

BSTC Holding Inc.; Notice of Application To Transfer Operating-Differential Subsidy Agreement, Contract MA/MSB–439 to BSTC Holding Inc.

Notice is hereby given that BSTC Holding Inc. (Applicant) applies under sections 605(c) and 608 of the Merchant Marine Act, 1936, as amended (Act), for financial aid in the operation of vessels which are to be used in an essential service in the foreign commerce of the United States through approval of the transfer to the Applicant of Operating-Differential Subsidy Agreement (ODSA), Contract MA/MSB–439.

The Applicant is a wholly-owned subsidiary of Atlantic Maritime, Ltd. (Atlantic). Atlantic was the winning bidder at bankruptcy for the U.S.-built, U.S.-flag tanker, the FALCON LEADER. Closing on the purchase of the FALCON LEADER is currently pending. Boston Shipping & Trading, an affiliated company of the Applicant, will own the FALCON LEADER.

On March 11, 1996, Atlantic entered into an agreement to purchase ODSA, Contract MA/MSB–439 from the estates of Equity Carriers I, Inc., Equity Carriers III, Inc., and Asco-Falcon II Shipping Company (the Estates).

ODSA, Contract MA/MSB–439 provided an operating-differential subsidy (ODS) for each of three MA Design C5–M–129 dry bulk cargo vessels. ODSA, Contract MA/MSB–439 expires on May 23, 2001.

On April 9, 1996, Atlantic assigned its rights under the agreement to purchase ODSA, Contract MA/MSB–439 to the Applicant. The Applicant proposes to use the ODS provided in the ODSA to engage the FALCON LEADER in an essential service in the foreign commerce of the United States. The Applicant does not charter or operate vessels other than the proposed chartering of the FALCON LEADER. The Applicant is currently in search of two additional vessels documented in the United States that would be suitable to receive ODS under the ODSA. This application will be amended when and if the Applicant identifies such existing vessels. If the Applicant is not able to identify two such existing suitable vessels, the Applicant will seek permission to utilize the ODS for two newly constructed or acquired vessels to be subsequently identified.

The Applicant currently intends to offer the FALCON LEADER for charter on the spot and term market in the Caribbean to U.S. east coast oil product

trade. The FALCON LEADER has a deadweight capacity of 33,542 LTs and a cargo tank capacity of 224,096 barrels. The Applicant will hire Osprey-Acomarit Ship Management Inc., to manage the operation of the FALCON LEADER.

In summary, the Applicant requests the following under the Act:

(1) Approval under section 608 of the transfer of ODSA, Contract MA/MSB–439 from the Estates to Atlantic (and henceforth to the Applicant) and approval under section 605(c), section 601, and other provisions of the Act of financial aid for the operation of the FALCON LEADER in the worldwide carriage of liquid bulk cargo in the foreign commerce of the United States and the carriage of such cargo between foreign ports, and, if the Applicant amends this application, for two additional vessels in an essential service in the foreign commerce of the United States.

(2) Modification of the ODSA for the worldwide transportation of product in bulk and any other essential services, as described in an amendment to this application.

This application may be inspected in the Office of the Secretary, Maritime Administration. Any person, firm or corporation having any interest in such request and desiring to submit comments concerning the application must file written comments in triplicate with the Secretary, Maritime Administration, Room 7210, Nassif Building, 400 Seventh Street SW., Washington D.C. 20590. Comments must be received no later than 5:00 p.m. on May 9, 1996. The Maritime Subsidy Board will consider any comments submitted and take such action with respect thereto as may be deemed appropriate.

(Catalog of Federal Domestic Assistance Program No. 2.804 Operating-Differential Subsidies)

By Order of the Maritime Subsidy Board.

Dated: April 22, 1996.

Joel C. Richard,

Secretary.

[FR Doc. 96–10253 Filed 4–24–96; 8:45 am]

BILLING CODE 4910–81–P

Surface Transportation Board

[STB Special Tariff Authority No. 9601]

Petition To Allow Short-Term Notice of Fuel Cost-Related Increases

AGENCY: Surface Transportation Board.

ACTION: Notice and request for comments.

SUMMARY: On April 16, 1996, the American Trucking Associations, Inc., the Interstate Truckload Carriers Conference, and the American Movers Conference (collectively petitioners) jointly requested the Surface Transportation Board (Board) to permit motor carriers still subject to statutory tariff-filing requirements to implement fuel-related surcharges on one day's notice. The Board seeks public comment on petitioners' request with respect to motor carriers providing joint service with water carriers in the noncontiguous domestic trade, the only category of motor service for which carriers must file and maintain tariffs with the Board.

DATES: Comments are due on May 6, 1996.

ADDRESSES: Send comments (an original and 10 copies) referring to STB Special Tariff Authority No. 9601 to: Surface Transportation Board, Office of the Secretary, Case Control Branch, 1201 Constitution Avenue, NW., Washington, DC 20423.

FOR FURTHER INFORMATION CONTACT: Ronald A. Hall, (202) 927–5639. [TDD for the hearing impaired: (202) 927–5721.]

SUPPLEMENTARY INFORMATION: Petitioners request the above-described relief so that motor carriers may more quickly recover through rate surcharges their increased expenditures associated with rapidly rising diesel fuel prices. According to petitioners, fuel prices have risen by more than 17 cents per gallon, or 15 percent, in the past ten weeks, and by more than 5 cents in the past week alone. Petitioners also state that bulk fuel prices have increased even more sharply, rising as much as 35 cents per gallon, or 75 percent from their lows of the past year. Petitioners submit that, because fuel costs comprise approximately 20 percent of a carrier's operating costs, the rapid increases in fuel costs can cripple carriers that cannot pass them through quickly. As a result, petitioners state that carriers must be allowed to put tariff rate increases into effect promptly. Accordingly, they ask the Board to reinstate Special Tariff Authorities previously adopted by the Interstate Commerce Commission (ICC), the Board's predecessor, which allowed for fuel-related surcharges to take effect on one day's notice in similar circumstances.

Petitioners recognize that, as a result of the ICC Termination Act of 1995, Pub L. No. 104–88, 109 Stat. 803 (ICCTA), and the Trucking Industry Regulatory Reform Act of 1994, Pub. L. No. 103–311, 108 Stat. 1683 (TIRRA), tariff-filing requirements for most motor carriers have been eliminated, and that most motor carriers may change their rates without government approval or oversight. Therefore, they seek relief only for household goods carriers and for motor carriers operating in the noncontiguous domestic trade. While household goods carriers must maintain tariffs available for inspection at their place of business, they are not required to file those tariffs with the Board, nor is the Board authorized to promulgate rules governing their contents or procedural requirements—including notice—associated with filing such tariffs. 49 U.S.C. 13702(c). Thus, like most other motor carriers, household goods carriers also remain free to adjust their rates to deal with fuel cost increases free from the Board's oversight. Tariff-filing requirements, including notice requirements, remain only for motor carriers engaged in noncontiguous domestic trade. 49 U.S.C. 13702(b).

It is not clear how much effect escalating fuel prices are having on the extremely limited amount of service that remains subject to the Board's tariff-filing jurisdiction, and hence over which the Board has authority to grant the relief sought by petitioners. Accordingly, the Board invites all interested parties to comment on petitioners' request as it pertains to motor carriers providing joint service with water carriers in the noncontiguous domestic trade.

Request for Comments

Comments (an original and 10 copies) must be in writing and are due 10 days after publication of this notice.

Small Entities

Because this is not a notice of proposed rulemaking within the meaning of the Regulatory Flexibility Act (5 U.S.C. 601 *et seq.*), we need not conduct at this point an examination of impacts on small entities. Commentors may address whether our consideration of petitioners' requested relief would have significant economic effects on any substantial number of small entities.

Environment

The issuance of this notice and request for comments will not significantly affect either the quality of the human environment or the conservation of energy resources. Commentors may address whether a determination to grant the requested relief would significantly affect either the quality of the human environment or the conservation of energy resources.

Authority: 49 U.S.C. 721(a) and 13702(a).

Decided: April 19, 1996.

By the Board, Chairman Morgan, Vice Chairman Simmons, and Commissioner Owen.

Vernon A. Williams,

Secretary.

[FR Doc. 96–10261 Filed 4–24–96; 8:45 am]

BILLING CODE 4915–00–P

National Highway Traffic Safety Administration

Safety Performance Standards, Research and Safety Assurance Programs Meetings

AGENCY: National Highway Traffic Safety Administration, DOT.

ACTION: Notice of NHTSA Industry Meetings.

SUMMARY: This notice announces a public meeting at which NHTSA will answer questions from the public and the automobile industry regarding the agency's vehicle regulatory, safety assurance and other programs. In addition, NHTSA will hold a separate public meeting to describe and discuss specific research and development projects.

DATES: The Agency's regular, quarterly public meeting relating to its vehicle regulatory, safety assurance and other programs will be held on June 13, 1996, beginning at 9:45 a.m. and ending at approximately 12:30 p.m. Questions relating to the above programs must be submitted in writing by June 3, 1996, to the address shown below. If sufficient time is available, questions received after June 3, may be answered at the meeting. The individual, group or company submitting a question(s) does not have to be present for the question(s) to be answered. A consolidated list of the questions submitted by June 3, 1996, and the issues to be discussed will be transmitted to interested persons by June 7, 1996, and will be available at the meeting. Also, the agency will hold a second public meeting on June 12, devoted exclusively to a presentation of research and development programs. This meeting will begin at 1:30 p.m. and end at approximately 5:00 p.m. That meeting is described more fully in a separate announcement. After the June meetings, the next NHTSA Technical Industry Public Meeting will be held on September 12 at the Best Western Tysons Westpark Hotel, 9401 Westpark Drive, McLean, Virginia. The Research and Development (R&D) Industry meeting will be held on September 11 at the same location beginning at 1:30 p.m. The last NHTSA Industry Meeting of this year will be held on December 12, 1996 from 9:45 a.m. to 12:30 p.m. at the Royce Hotel, 31500 Wick Road, Romulus, MI. The Research and Development Industry meeting will be held December 11, 1996 from 1:30 p.m. to 5:00 p.m. at the same location.

ADDRESSES: Questions for the June 13, NHTSA Technical Industry Meeting, relating to the agency's vehicle regulatory and safety assurance programs, should be submitted to Barry Felrice, Associate Administrator for Safety Performance Standards, NPS–01, National Highway Traffic Safety Administration, Room 5401, 400 Seventh Street, SW., Washington, DC 20590, Fax number (202) 366–4329. The meeting will be held at the Royce Hotel—Detroit Metro Airport, 31500 Wick Road, Romulus, Michigan 48174.

SUPPLEMENTARY INFORMATION: NHTSA will hold this regular, quarterly meeting to answer questions from the public and the regulated industries regarding the agency's vehicle regulatory, safety assurance and other programs. Questions on aspects of the agency's research and development activities that relate to ongoing regulatory actions should be submitted, as in the past, the agency's Safety Performance Standards Office. The purpose of this meeting is to focus on those phases of NHTSA activities which are technical, interpretative or procedural in nature. Transcripts of these meetings will be available for public inspection in the NHTSA Technical Reference Section in Washington, DC, within four weeks after the meeting. Copies of the transcript will then be available at ten cents a page, (length has varied from 100 to 150 pages) upon request to NHTSA Technical Reference Section, Room 5108, 400 Seventh Street, SW., Washington DC 20590.

The Technical Reference Section is open to the public from 9:30 a.m. to 4:00 p.m.

We would appreciate the questions you send us to be organized by categories to help us to process the questions into agenda form more efficiently.

Sample format as follows:

I. Rulemaking
  A. Crashavoidance
  B. Crashworthiness
  C. Other Rulemakings
II. Consumer Information
III. Miscellaneous

NHTSA will provide auxiliary aids to participants as necessary. Any person desiring assistance of ''auxiliary aids'' (e.g., sign-language interpreter, telecommunications devices for deaf persons (TDDs), readers, taped texts, Brailled materials, or large print materials and/or a magnifying device), please contact Barbara Carnes on (202) 366–1810, by COB May 31, 1996.

Barry Felrice,

Associate Administrator for Safety Performance Standards.

[FR Doc. 96–10122 Filed 4–24–96; 8:45 am]

BILLING CODE 4910–59–M

DEPARTMENT OF THE TREASURY

Domestic Finance; Notice of Open Meeting of the Advisory Committee; U.S. Community Adjustment and Investment Program

The Department of the Treasury, pursuant to the North American Free Trade Agreement (''NAFTA'') Implementation Act (Pub. L. No. 103–182), established an advisory committee (the ''Advisory Committee'') for the community adjustment and investment program (the ''Program''). The Program will provide financing to businesses and individuals to create new jobs in communities adversely impacted by NAFTA. The charter of the Advisory Committee has been filed in accordance with the Federal Advisory Committee Act of October 6, 1972 (Pub. L. No. 92–463), with the approval of the Secretary of the Treasury.

The Advisory Committee consists of nine members of the public, appointed by the President, who collectively represent: (1) Community groups whose constituencies include low-income families; (2) scientific, professional, business, nonprofit, or public interest organizations or associations, which are neither affiliated with, nor under the direction of, a government; and (3) for-profit business interests.

The objectives of the Advisory Committee are to: (1) Provide informed advice to the President regarding the implementation of the Program; and (2) review on a regular basis, the operation of the Program, and provide the President with the conclusions of its review. Pursuant to Executive Order No. 12916, dated May 13, 1994, the President established an interagency committee to implement the Program and to receive, on behalf of the President, advice of the Advisory Committee. The committee is chaired by the Secretary of the Treasury.

A meeting of the Advisory Committee, which will be open to the public, will be held on Friday, May 10, 1996 from 9:00 a.m. to 3:00 p.m. at the U.S. Department of Agriculture, Jamie L. Whitten Administration Building, Room 107A, 14th and Independence Avenue, SW., Washington, DC 20250 (main

entrance at Jefferson Drive). The room will accommodate approximately 100 persons and seating is available on a first-come, first-serve basis, unless space has been reserved in advance. Due to limited seating, prospective attendees are encouraged to contact the person listed below prior to May 7, 1996. If you would like to have the Advisory Committee consider a written statement, material must be submitted to the U.S. Community Adjustment and Investment Program, Advisory Committee, Department of the Treasury, 1500 Pennsylvania Avenue, NW., Room 1124, Washington, DC 20220 no later than May 3, 1996. If you have any questions, please call Dan Decena at (202) 622–0637. (Please note that this telephone number is not toll-free.)

Mozelle W. Thompson,

Deputy Assistant Secretary, Government Financial Policy.

[FR Doc. 96–10134 Filed 4–24–96; 8:45 am]

BILLING CODE 4510–25–P

Internal Revenue Service

Proposed Collection; Comment Request for Form 9041

AGENCY: Internal Revenue Service (IRS), Treasury.

ACTION: Notice and request for comments.

SUMMARY: The Department of the Treasury, as part of its continuing effort to reduce paperwork and respondent burden, invites the general public and other Federal agencies to take this opportunity to comment on proposed and/or continuing information collections, as required by the Paperwork Reduction Act of 1995, Public Law 104–13 (44 U.S.C. 3506(C)(2)(A)). Currently, the IRS is soliciting comments concerning Form 9041, Application for Electronic/Magnetic Media Filing of Business and Employee Benefit Plan Returns.

DATES: Written comments should be received on or before June 24, 1996, to be assured of consideration.

ADDRESSES: Direct all written comments to Garrick R. Shear, Internal Revenue Service, room 5571, 1111 Constitution Avenue NW., Washington, DC 20224.

FOR FURTHER INFORMATION CONTACT: Requests for additional information or copies of the information collection should be directed to Carol Savage, (202) 622–3945, Internal Revenue Service, room 5569, 1111 Constitution Avenue NW., Washington, DC 20224.

SUPPLEMENTARY INFORMATION:

Title: Form 9041, Application for Electronic/Magnetic Media Filing of Business and Employee Benefit Plan Returns.

OMB Number: 1545–1079.

Form Number: Form 9041.

Abstract: Form 9041 is used by fiduciaries, partnerships, and plan sponsors/administrators as an application to file Forms 1041, 1065, 5500, 5500–C/R, or 5500EZ electronically or on magnetic media; and by software firms, service bureaus, and electronic transmitters to develop auxiliary services.

Current Actions: Form 9041 is being revised to delete line 5, because this information is no longer needed.

Type of Review: Revision.

Affected Public: Business or other for-profit organizations.

Estimated Number of Respondents: 3,000.

Estimated Time Per Respondent: 18 minutes.

Estimated Total Annual Burden Hours: 900 hours.

Request for Comments

Comments submitted in response to this notice will be summarized and/or included in the request for OMB approval. All comments will become a matter of public record. Comments are invited on: (a) Whether the collection of information is necessary for the proper performance of the functions of the agency, including whether the information shall have practical utility; (b) the accuracy of the agency's estimate of the burden of the collection of information; (c) ways to enhance the quality, utility, and clarity of the information to be collected; and (d) ways to minimize the burden of the collection of information on respondents, including through the use of automated collection techniques or other forms of information technology.

Approved: April 19, 1996,

Garrick R. Shear,

IRS Reports Clearance Officer.

[FR Doc. 96–10274 Filed 4–24–96; 8:45 am]

BILLING CODE 4830–01–U

DEPARTMENT OF TREASURY

Internal Revenue Service

AGENCY: Internal Revenue Service (IRS), Treasury.

ACTION: Notice of Open Meeting of the Information Reporting Program Advisory Committee.

SUMMARY: In 1991 the IRS established the Information Reporting Program Advisory Committee (IRPAC). The primary purpose of IRPAC is to provide an organized public forum for discussion of relevant information reporting issues between the officials of the IRS and representatives of the payer community. IRPAC offers constructive observations about current or proposed policies, programs, and procedures and, when necessary, suggests ways to improve the operation of the Information Reporting Program (IRP).

There will be a meeting of IRPAC on Tuesday and Wednesday, May 14–15, 1996. The meeting will be held in Room 3313 of the Internal Revenue Service Building, which is located at 1111 Constitution Avenue, NW., Washington, DC. A summarized version of the agenda along with a list of topics that will be discussed are listed below.

Summarized Agenda for Meeting on May 14–15, 1996

Tuesday, May 14, 1996

9:30 Public Meeting Opens
11:30 Break for Lunch
1:00 IRPAC Presentations Continue
4:00 Adjourn for the Day

Wednesday, May 15, 1996

9:30 Public Meeting Reconvenes
12:00 Adjourn

The topics that will be covered are as follows:

(1) Combined Filing by Successor Corporations
(2) Non-Resident Alien Reporting Issues and Update
(3) Discharge of Indebtedness for Foreign Subsidiaries
(4) Bar Coding on Recipient/State Copies of Information Returns
(5) Renumbering of Boxes on Form 1099–B
(6) Tax Deposit Reconciliations of Form 945 with Form 1099 Withholding
(7) Clarifications in Annual Instructions for Forms 1099, 1098, and W–2G
(8) Simplified Tax and Wage Reporting System (STAWRS) Update
(9) Form W–9 Instructions Clarifications
(10) Closing Agreements in lieu of Corrected 1099's
(11) Dividends on Employee Stock Ownership Plans (ESOP)
(12) Rollovers of Ineligible Amounts
(13) Form 5498, New Box 5 for 1996
(14) Logos on Form 1099 Payee Statements
(15) Electronic Financial Tax Payment System (EFTPS) Update
(16) Updates on Martinsburg Computing Center Seminars and Faxback of IRP Forms
(17) SS–8 Determination Centers Update
(18) Update on Federal/State Information Reporting Initiatives
(19) Form 1040 Instructions Regarding Mortgage Interest

Note: Last minute changes to these topics are possible and could prevent advance notice.

SUPPLEMENTARY INFORMATION: IRPAC reports to the National Director, Office of Service Center Compliance, who is the executive responsible for information reporting and is charged with its system wide planning and improvement. IRPAC is instrumental in providing advice to enhance the IRP Program. Increasing participation by external stakeholders in the planning and improvement of the tax system will help achieve the goals of increasing voluntary compliance and reduction of burden. IRPAC is currently comprised of 20 representatives from various segments of the private sector payer community. IRPAC members are not paid for their time or services, but consistent with Federal regulations, they are reimbursed for their travel and lodging expenses to attend two meetings each year.

DATES: The meeting will be open to the public, and will be in a room that accommodates approximately 90 people, including members of IRPAC and IRS officials. Seats are available to the public on a first-come, first-served basis. In order to get your name on the building access list, *notification of intent to attend this meeting must be made with Ms. Tommie Matthews no later than Friday, May 10, 1996. Ms. Matthews can be reached at 202–622–4214 (not a toll-free number).* Notification of intent to attend should include your name, organization and phone number. If you leave this information for Ms. Matthews in a voice-mail message, please spell out all names. A draft of the agenda will be available via facsimile transmission the week prior to the meeting. Please call Ms. Matthews on or after Monday May 6, 1996 to have a copy of the agenda faxed to you. Please note that a draft agenda will not be available until Monday, May 6.

ADDRESSES: If you would like to have IRPAC consider a written statement at a future IRPAC meeting (not the May 1996 meeting), please write to Kate LaBuda at IRS, Office of Service Center Compliance, CP:CO:SC:P, Room 2013, 1111 Constitution Avenue, NW., Washington, DC, 20224.

FOR FURTHER INFORMATION CONTACT: To give notification of intent to attend this meeting, call Ms. Tommie Matthews at 202–622–4214 (not a toll-free number). For general information about IRPAC call Kate LaBuda at 202–622–3404 (not a toll-free number).

Dated: April 18, 1996.

Bob Longford,

(Acting) Director, Office of Payer Compliance, Service Center Compliance.

[FR Doc. 96–10281 Filed 4–24–96; 8:45 am]

BILLING CODE 4830–01–U

UNITED STATES INFORMATION AGENCY

Edmund S. Muskie Fellowship Program

ACTION: Notice; request for proposals.

SUMMARY: The Office of Academic Programs, Academic Exchange Programs Division, European Programs Branch of the United States Information Agency's Bureau of Educational and Cultural Affairs announces an open competition for an assistance award. Public and private non-profit organizations meeting the provisions described in IRS regulation 26 CFR 1.501(c)(3)–1 may apply to administer the recruitment, selection, placement, monitoring, evaluation, and follow-on activities for the Edmund S. Muskie Fellowship Program. Organizations with less than four years of experience in conducting international exchange programs are not eligible for this competition.

The Edmund S. Muskie Fellowship Program selects outstanding citizens of the New Independent States (NIS) and the Baltics to receive scholarships for Master's-level study and professional development in the United States in the fields of business administration, economics, law, and public administration. Fellowships are awarded to qualified young and mid-career individuals who are citizens of Armenia, Azerbaijan*, Belarus, Estonia, Georgia, Kazakstan, Kyrgyzstan, Latvia, Lithuania, Moldova, the Russian Federation, Tajikistan, Turkmenistan, Ukraine, or Uzbekistan. Interested organizations should read the complete Federal Register announcement and request a Solicitation Package from USIA prior to preparing a proposal.

*Please note: Programs with Azerbaijan are subject to restrictions of Section 907 of the Freedom Support Act: Employees of the Government of Azerbaijan or any of its instrumentalities are excluded from participation, and no U.S. participant overseas may work for the Government of Azerbaijan or any of its instrumentalities. In addition, the Government of Azerbaijan or any of its instrumentalities will have no control in the actual selection of participants.

Edmund S. Muskie Fellows enroll in graduate degree, certificate, and non-degree programs lasting one-to-two academic years. It is estimated that approximately 100–130 Fellows will participate in the 1997 program.

Overall grant making authority for this program is contained in the Mutual Educational and Cultural Exchange Act of 1961, Public Law 87–256, as amended, also known as the Fulbright-Hays Act. The purpose of the Act is ''to enable the Government of the United States to increase mutual understanding between the people of the United States and the people of other countries * * *; to strengthen the ties which unite us with other nations by demonstrating the educational and cultural interests, developments, and achievements of the people of the United States and other nations * * * and thus to assist in the development of friendly, sympathetic and peaceful relations between the United States and the other countries of the world.''

Programs and projects must conform with Agency requirements and guidelines outlined in the Solicitation Package. USIA projects and programs are subject to the availability of funds.

ANNOUNCEMENT TITLE AND NUMBER: All communications with USIA concerning this announcement should refer to the above title and reference number *E/AEE–97–01.*

DEADLINE FOR PROPOSALS: All copies must be received at the U.S. Information Agency by 5 p.m. Washington, D.C. time on Thursday, June 20, 1996. Faxed documents will not be accepted, nor will documents postmarked June 20, 1996, but received at a later date. It is the responsibility of each applicant to ensure that proposals are received by the above deadline.

FOR FURTHER INFORMATION CONTACT: The Office of Academic Programs, European Programs Branch, E/AEE, Room 246, U.S. Information Agency, 301 4th Street, S.W., Washington, D.C. 20547, (P)202–205–0525, (F)202–260–7985, (E–Mail) LShane@USIA.gov to request a Solicitation Package containing more detailed award criteria, required application forms, and standard guidelines for preparing proposals, including specific criteria for preparation of the proposal budget.

TO DOWNLOAD A SOLICITATION PACKAGE VIA INTERNET: The Solicitation Package may be downloaded from USIA's website at http://www.usia.gov/ or from the Internet Gopher at gopher.usia.gov. Select ''Education and Cultural Exchanges'', then select ''Current Request for Proposals (RFPs).'' Please read ''About the Following RFPs'' before beginning to download.

Please specify USIA Program Officer/Specialist Laura Shane on all inquiries and correspondence. Interested

applicants should read the complete Federal Register announcement before sending inquiries or submitting proposals. Once the RFP deadline has passed, Agency staff may not discuss this competition in any way with applicants until the Bureau proposal review process has been completed.

SUBMISSIONS: Applicants must follow all instructions given in the Solicitation Package. The original and 14 copies of the application should be sent to: U.S. Information Agency, Ref.: *E/AEE–97–01*, Office of Grants Management, E/XE, Room 326, 301 4th Street, S.W., Washington, D.C. 20547.

Applicants must also submit the ''Executive Summary'' and ''Proposal Narrative'' sections of the proposal on a 3.5″ diskette, formatted for DOS. This material must be provided in ASCII text (DOS) format with a maximum line length of 65 characters. USIA will transmit these files electronically to USIS posts overseas for their review, with the goal of reducing the time it takes to get posts' comments for the Agency's grants review process.

DIVERSITY GUIDELINES: Pursuant to the Bureau's authorizing legislation, programs must maintain a non-political character and should be balanced and representative of the diversity of American political, social, and cultural life. ''Diversity'' should be interpreted in the broadest sense and encompass differences including, but not limited to ethnicity, race, gender, religion, geographic location, socio-economic status, and physical challenges. Applicants are strongly encouraged to adhere to the advancement of this principle both in program administration and in program content. Please refer to the review criteria under the ''Support for Diversity'' section for specific suggestions on incorporating diversity into the total proposal.

SUPPLEMENTARY INFORMATION:

Overview

The Edmund S. Muskie Fellowship Program is designed to foster democratization and the transition to market economies in the former Soviet Union and Baltic States though intensive academic and professional training. Since the program's inception in fiscal year 1992, over 650 Fellowships have been awarded. The academic component of the program begins in the fall semester of the year of award and follows the normal one- or two-year academic cycle. Fellows take part in eight- to twelve-week internships during the summer following the first academic year. While Fellows are closely assisted in their internship search by host institutions, sponsoring organizations, and USIA, the primary responsibility for securing appropriate internships remains with the Fellows. Fellows placed in one-year graduate programs return home at the conclusion of their internship. Fellows placed in two-year graduate programs return to their academic placement following the internship. The Muskie Program is not intended as a precursor to doctoral studies in the United States. At the end of their designated academic and internship programs, Fellows are required to return to their home countries.

The Muskie Program includes the fields of business administration, economics, law, and public administration. USIA anticipates that the fields of mass communications/journalism, education administration, library and information science, and public policy may be added to the 1997 Muskie Program. Therefore, organizations should address their abilities to administer the program in these fields as well as the four original Muskie fields.

In the past, the Muskie Program has been administered consortially by four organizations, working in close partnership for all phases of the program. It is anticipated that decreases in program funding will necessitate that the number of organizations administering the Muskie Program be reduced. Applicant organizations may apply to administer the program individually or via a consortial arrangement as long as one organization is designated as the recipient of the grant. Organizations may also indicate in their proposals a plan to work cooperatively with one or more applicant organizations. However, organizations must also clearly state their individual capabilities.

Proposing organizations must demonstrate the ability to administer all aspects of the Muskie program—advertisement, recruitment, selection, placement, orientation. Fellow monitoring and support, financial management, evaluation, follow-on, and alumni tracking and programming. Applicant organizations should demonstrate the ability to recruit and select a diverse pool of candidates from various geographic regions within the NIS and Baltics. Additionally, organizations will be asked to assist in the recruitment and selection of appropriate host institutions from throughout the United States for pre-academic, ESL, and academic programs. Administering organizations will act as the principal liaison with Muskie host institutions. Additionally, organizations should demonstrate the ability to work with private sector organizations in the United States, NIS and Baltics to facilitate to Fellows' professional development and post-program re-entry. Further details on specific program responsibilities can be found in the Project Objectives, Goals, and Implementation (POGI) Statement which is part of the formal Solicitation Package available from USIA.

Awards will begin on or about October 1, 1996, and will be approximately three years in duration. Initial recruitment and selection activities will be performed by the current administering organizations.

Guidelines

Programs must comply with J–1 visa regulations. Please refer to program specific guidelines (POGI) in the Solicitation Package for further details.

The level of funding for fiscal year 1997 is uncertain; proposal budgets should not exceed $5 million.

Organizations must submit a comprehensive line item budget based on the specific guidance in the Solicitation Package. There must be a summary budget as well as a break-down reflecting both the administrative budget and the program budget. Organizations whose proposals include an administrative budget that is less than 20% of the grant amount requested from USIA will be given preference. Detailed guidance on budget preparation is included in the Project Objectives, Goals and Implementation (POGI) statement. Please refer to the complete Solicitation Package for complete budget guidelines and formatting instructions.

Review Process

USIA will acknowledge receipt of all proposals and will review them for technical eligibility. Proposals will be deemed ineligible if they do not fully adhere to the guidelines stated herein and in the Solicitation Package. Eligible proposals will be forwarded to panels of USIA officers for advisory review. All eligible proposals will be reviewed by the program office, as well as the USIA Office of Eastern Europe and NIS Affairs and the USIA posts overseas, where appropriate. Proposals may be reviewed by the Office of the General Counsel or by other Agency elements. Funding decisions are at the discretion of the USIA Associate Director for Educational and Cultural Affairs. Final technical authority for assistance awards (grants or cooperative agreements) resides with the USIA grants officer.

Review Criteria

Technically eligible applications will be competitively reviewed according to the criteria stated below. These criteria are not rank ordered and all carry equal weight in the proposal evaluation:

(1.) Quality of program plan: Proposed programs should include academic rigor, thorough conception or project, demonstration of meeting participant needs, contributions to understanding the partner country, proposed alumni activities, specific details of recruitment, selection and monitoring processes, a thorough evaluation plan, proposed follow-on, and relevance to USIA's mission.

(2.) Program planning and institutional capacity: A detailed agenda and relevant work plan should demonstrate substantive undertakings and logistical capacity. Proposals should clearly demonstrate how the institution and its staff will meet the program objectives and plan.

(3.) Track record: Relevant USIA and outside assessments of the organization's experience with international exchanges;

(4.) Multiplier effect/impact: The impact of the exchange activity on the wider community and on the development of continuing ties, as well as the contribution of the proposed activity in promoting mutual understanding will be evaluated.

(5.) Value of U.S.-partner country relations: The assessment by USIA's geographic area office of the need, potential impact, and significance of the project with the partner countries.

(6.) Cost-effectiveness: A key measure of cost-effectiveness is the unit cost to the Agency. This is the total request of USIA monies divided by the number of fellow-months (number of fellows multiplied by the number of program months). The overhead and administrative components of the proposal, including salaries and honoraria, should be kept as low as possible. All other items should be necessary and appropriate.

(7.) Cost-sharing: Proposals should maximize cost-sharing through other private sector support as well as institutional direct funding contributions.

(8.) Diversity and pluralism: Preference will be given to proposals that demonstrate efforts to provide for the participation of students with a variety of major disciplines, from diverse regions, and of different socio-economic and ethnic backgrounds, to the extent feasible for the applicant institutions. The Agency will seek to achieve maximum geographic diversity in recruitment, selection and placement of participants through its award of grants.

(9.) Follow-on activities: Proposals should provide a plan for continued follow-on activity which insures that USIA-supported programs are not isolated events. Proposals should include a plan for alumni tracking and coordination that demonstrates the willingness to provide data to and coordinate tracking with USIA and USIS Posts overseas.

(10.) Project evaluation: Proposals should provide a plan for evaluation by the grantee institution to determine the success of the project. Special attention should be given to measuring long-term program effectiveness.

Notice

The terms and conditions published kin this RFP are binding and may not be modified by any USIA representative. Explanatory information provided by the Agency that contradicts published language will not be binding. Issuance of the RFP does not constitute an award commitment on the part of the Government. The Agency reserves the right to reduce, revise, or increase proposal budgets in accordance with the needs of the program and the availability of funds. Awards made will be subject to periodic reporting and evaluation requirements.

Notification

Final awards cannot be made until funds have been appropriated by Congress, allocated and committed through internal USIA procedures.

Dated: April 19, 1996.

Dell Pendergrast,

Deputy Associate Director for Educational and Cultural Affairs.

[FR Doc. 96–10239 Filed 4–24–96; 8:45 am]

BILLING CODE 8230–01–M

federal register

Thursday
April 25, 1996

Part II

Department of the Treasury

Office of the Comptroller of the Currency

12 CFR Part 13

Federal Reserve System

12 CFR Parts 208 and 211

Federal Deposit Insurance Corporation

12 CFR Part 368

Government Securities Sales Practices; Proposed Rule

DEPARTMENT OF THE TREASURY

Office of the Comptroller of the Currency

12 CFR Part 13

[Docket No. 96–09]
RIN 1557–AB52

FEDERAL RESERVE SYSTEM

12 CFR Parts 208 and 211

[Regulations H and K, Docket No. R–0921]

FEDERAL DEPOSIT INSURANCE CORPORATION

12 CFR Part 368

RIN 3064–AB66

Government Securities Sales Practices

AGENCIES: Office of the Comptroller of the Currency; Board of Governors of the Federal Reserve System; Federal Deposit Insurance Corporation.

ACTION: Joint notice of proposed rulemaking.

SUMMARY: The Comptroller of the Currency (OCC), Board of Governors of the Federal Reserve System (Board), and the Federal Deposit Insurance Corporation (FDIC)(collectively, Federal banking agencies or agencies) are requesting comment on a proposed rule regarding the responsibilities of banks that are government securities brokers or dealers with respect to sales practices concerning government securities. The proposed rule would establish standards concerning the recommendations to customers and the conduct of business by a bank that is a government securities broker or dealer. The agencies also propose to adopt an interpretation concerning recommendations to institutional customers with respect to government securities transactions.

DATES: Comments must be received by June 24, 1996.

ADDRESSES: Comments should be directed to:

OCC: Communications Division, Office of the Comptroller of the Currency, 250 E Street, SW., Washington, DC 20219, Attention: Docket No. 96–09; FAX number 202/874–5274 or internet address regs.comments@occ.treasury.gov. Comments may be inspected and photocopied at the same location.

Board: William W. Wiles, Secretary, Board of Governors of the Federal Reserve System, 20th Street and Constitution Avenue, NW., Washington, DC 20551, Attention: Docket No. R–0921, or delivered to room B–2222, Eccles Building, between 8:45 a.m. and 5:15 p.m. Comments may be inspected in Room MP–500 between 9:00 a.m. and 5:00 p.m. weekdays, except as provided in § 261.8 of the Board of Governor's rules regarding availability of information, 12 CFR 261.8.

FDIC: Jerry L. Langley, Executive Secretary, Attention: Room F–402, Federal Deposit Insurance Corporation, 550 17th Street NW., Washington, DC 20429. Comments may be delivered to Room F–400, 1776 F Street, NW., Washington, DC 20429, on business days between 8:30 a.m. and 5 p.m. or sent by facsimile transmission to FAX number 202/898–3838 or via Internet to: comments@fdic.gov. Comments will be available for inspection and photocopying in room 7118, 550 17th Street, NW., Washington, DC 20429, 8:30 a.m. and 5:00 p.m. on business days.

FOR FURTHER INFORMATION CONTACT: OCC: Ellen Broadman, Director, or Elizabeth Malone, Senior Attorney, Securities & Corporate Practices Division (202/874–5210).

Board: Oliver Ireland, Associate General Counsel (202/452–3625), or Lawranne Stewart, Senior Attorney (202/452–3513), Legal Division. For the hearing impaired only, Telecommunication Device for the Deaf (TDD), Earnestine Hill or Dorothea Thompson (202/452–3544).

FDIC: William A. Stark, Assistant Director (202/898–6972), Miguel Browne, Deputy Assistant Director (202/898–6789), Dennis Olson, Senior Financial Analyst (202/898–7212), Division of Supervision; Jeffrey M. Kopchik, Counsel, (202/898–3872), Legal Division, Federal Deposit Insurance Corporation, 550 17th Street, N.W. Washington, D.C. 20429.

SUPPLEMENTARY INFORMATION: The Government Securities Act Amendments of 1993 (Amendments) included a provision permitting the Federal banking agencies to adopt sales practice rules for sales of government securities by banks that have filed, or are required to file, notice as government securities brokers or dealers. The Amendments also authorized the National Association of Securities Dealers (NASD) to adopt sales practice rules with respect to sales of government securities by government securities broker/dealers that are members of the NASD. *See* Pub.L. 103–202, section 106 (15 U.S.C. 78o–3 and 78o–5).

The NASD, acting under its new authority, has approved a proposal to extend its Rules of Fair Practice, where appropriate, to activities relating to government securities, and has forwarded the proposal to the Securities and Exchange Commission (SEC) for approval.[1] The NASD proposal includes the extension to government securities transactions of section 1 (NASD Business Conduct Rule) and section 2 (NASD Suitability Rule) of Article III of the NASD Rules of Fair Practice (NASD Rules). At the same time, the NASD approved an interpretation concerning suitability obligations to institutional customers under section 2 (NASD Suitability Interpretation).[2] This interpretation addresses the responsibilities of brokers and dealers under the NASD Suitability Rule with respect to recommendations to institutional customers and also is subject to SEC approval.

The OCC, Board, and the FDIC are requesting comment on the adoption of rules substantially similar to the NASD Business Conduct Rule and the NASD Suitability Rule and on the adoption of an interpretation substantially similar to the NASD Suitability Interpretation.[3] The agencies request comment on the application of such requirements to the government securities transactions of banks that are required to file notice under the provisions of the Government Securities Act (15 U.S.C. 78o–5(a)) and applicable Treasury rules (17 CFR 400.1(d) and 401).

The NASD Rules

The NASD Business Conduct Rule provides that ''[a] member, in the conduct of his business, shall observe high standards of commercial honor and just and equitable principles of trade.''[4]

[1] Amendments to the NASD proposal have been published for comment by the SEC. 61 FR 11655 (March 21, 1996). The comment period on this notice closes on April 22, 1996. The full NASD proposal was published for comment by the SEC on October 24, 1995. 60 FR 54530.

[2] *Id.* The NASD published its proposed interpretation for comment on two occasions prior to its adoption. *See* NASD Notice to Members 95–21 (April 1995) and NASD Notice to Members 94–62 (August 1994).

[3] Should further amendments be made to the NASD proposal with respect to the NASD Business Conduct or Suitability Rules or the NASD Suitability Interpretation prior to final approval by the SEC, the agencies will consider incorporating such amendments into the final rule. Commenters therefore should consider any further amendments to the NASD proposal in commenting on the agencies' proposed rules.

Additionally, at the present time the agencies are not considering the adoption of rules similar to other NASD Rules, as the agencies believe that the standard established by the NASD Business Conduct Rule is sufficiently broad that practices that arise in connection with the government securities activities of banks may be dealt with adequately under such a rule.

[4] NASD Rules of Fair Practice (NASD Rules), Article III, section 1. The agencies do not propose to adopt any of the NASD's specific interpretations of this rule.

The NASD Suitability Rule provides that, in recommending a transaction to a customer, a member must have ''reasonable grounds for believing that the recommendation is suitable for such customer upon the basis of the facts, if any, disclosed by such customer as to his other security holdings and as to his financial situation and needs.'' [5] The rule also provides that, for customers that are not institutional customers, the member must make reasonable efforts to obtain information concerning the customer's financial and tax status and investment objectives before executing a transaction recommended to the customer.[6] The NASD Suitability Rule applies only in situations where a member makes a ''recommendation'' to its customer.

The NASD Suitability Interpretation

The NASD Suitability Interpretation identifies factors that may be relevant when evaluating compliance with the NASD Suitability Rule with respect to an institutional customer other than a natural person. The interpretation sets forth the two most important considerations in determining the scope of a government securities broker's or dealer's responsibilities under the NASD Suitability Rule with respect to an institutional customer. Those two considerations are (1) the customer's capability to evaluate investment risk independently and (2) the extent to which the customer exercises independent judgement in evaluating a member's recommendation. The NASD Suitability Interpretation provides that a government securities broker or dealer may be considered to have met the requirements of the NASD Suitability Rule with respect to a particular institutional customer where the government securities broker or dealer has reasonable grounds to determine that the institutional customer is capable of independently evaluating investment risk and is exercising independent judgement in evaluating a recommendation.

The NASD Suitability Interpretation sets forth certain factors for brokers or dealers to apply in evaluating an institutional customer's capacity to evaluate investment risk independently. Factors considered relevant to this determination include the customer's use of consultants or advisors, the experience of the customer generally and with respect to the specific instrument, the customer's ability to understand the investment and to evaluate independently the effect of market developments on the investment, and the complexity of the security involved. The interpretation stresses that an institutional customer's ability to evaluate investment risk independently may vary depending on the particular type of investment at issue. An institutional customer with general ability to evaluate investment risk may be less able to do so when dealing with new types of instruments or instruments with which the customer has little or no experience.

The NASD Suitability Interpretation further provides that a determination that an institutional customer is making an independent investment decision depends on factors such as the understanding between the member and its customer as to the nature of their relationship, the presence or absence of a pattern of acceptance of the member's recommendations, the customer's use of ideas, suggestions, and information obtained from other market professionals, and the extent to which the customer has provided the member with information concerning its portfolio or investment objectives.

While the NASD Suitability Interpretation provides that these factors would be considered relevant in evaluating whether a government securities broker or dealer has fulfilled the requirements of the NASD Suitability Rule with respect to any institutional customer that is not a natural person, it further provides that the factors cited would be considered most relevant for an institutional customer with at least $10 million of assets in its securities portfolio or under management.

Rules Applicable to Banks

The agencies are requesting comment on whether they should adopt rules substantially similar to the NASD Business Conduct Rule and Suitability Rule and the NASD Suitability Interpretation for banks that are government securities brokers or dealers in order to provide standards with respect to government securities sales practices by such banks. Compliance with such rules by a bank would be enforced principally through the examination process on the basis of the examiner's assessment of an institution's policies and procedures and its adherence to those policies and procedures.[7] The NASD Rules, on the other hand, are enforced through complaints filed with, and proceedings before, an NASD District Business Conduct Committee or other NASD committee.[8] The differences in the process by which such rules would be applied to banks may raise questions as to whether the rules should be modified to reflect the bank supervisory structure.[9]

Request for Comments

The agencies request comment generally as to the need for and desirability of the proposed rule and interpretation, and on the following specific issues:

(1) Should the agencies adopt rules that are substantially similar to the NASD Business Conduct Rule and the NASD Suitability Rule, or would other rules be more appropriate? Under the NASD Suitability Rule, a member must make recommendations based on any facts disclosed by the customer as to the customer's other securities holdings, financial situation and needs, but the member is required to request information concerning financial and tax status and investment objectives only from non-institutional customers. Should a bank, like an NASD member, be required to request such information of non-institutional customers before making a recommendation, or should a bank be able to base recommendations on the customer's investment objectives alone, without requesting or considering information concerning the customer's other holdings and financial situation when such information has not been volunteered? In the alternative, should the rule for banks be uniform for both institutional and non-institutional customers?

(2) In considering whether an alternative to the NASD Rules would be appropriate for banks operating as government securities brokers and dealers, are there benefits to consistency among government securities brokers and dealers that the agencies should

[5] NASD Rules, Article III, section 2(a).

[6] NASD Rules, Art. III, section 2(b). For the purposes of section 2, an institutional customer includes a bank, savings and loan association, insurance company, registered investment company or investment advisor, or any other entity with total assets of at least $50 million. NASD Rules, Art. III, section 21. As part of the revisions to the NASD Rules, this definition will be incorporated in section 2.

[7] The legislative history of the Government Securities Act Amendments of 1993 provides no indication that Congress intended the amendments included in section 106 of that act to create a private right of action, and the agencies do not intend to create a private right of action by a customer against a bank based on a violation of the agencies' rule or interpretation. *See Touche Ross & Co. v. Redington*, 442 U.S. 560 (1979).

[8] *See generally* NASD Code of Procedure.

[9] In this regard, the agencies note that the rules of the Municipal Securities Rulemaking Board (MSRB) are enforced through the bank examination process with respect to banks that are brokers or dealers in municipal securities. The MSRB rules include provisions that are similar to the NASD Business Conduct Rule and Suitability Rule. *See* MSRB Rules G–17 and G–19.

consider? Given the differences in enforcement mechanisms, will equal treatment of customers be more likely to be achieved by a rule that is consistent with the NASD rule or by an alternative rule?

(3) Does a rule substantially similar to the NASD Business Conduct Rule provide a sufficiently clear standard for the conduct of sales of government securities by a bank that is a government securities broker or dealer, or is greater specificity preferable?

(4) The proposed rule, like the NASD Suitability Rule, does not define the term ''recommendation.'' The agencies request comment as to whether, given the differences in the nature of government securities in comparison to equity and private debt securities, further guidance is needed by banks on the activities that may be considered to constitute a recommendation in connection with discussions concerning government securities. In particular, is it sufficiently clear that the provision of market observations, forecasts about the general direction of interest rates, other descriptive or objective statements concerning government securities or the government securities markets, or price quotations would not be considered to constitute making a ''recommendation'' concerning a government security, absent other conduct?

(5) Although the NASD has proposed to extend its Rules of Fair Practice generally to transactions in government securities, the agencies currently are considering only the adoption of rules similar to the NASD Business Conduct Rule and Suitability Rule and the NASD Suitability Interpretation for banks acting as government securities brokers or dealers. Should the agencies consider adopting rules similar to other sections of the Rules of Fair Practice or interpretations similar to other NASD interpretations? [10] For example, should the agencies consider adopting a rule or specific guidelines concerning banks' supervision of government securities activities? [11] Explicit adoption of other sections of the NASD Rules would provide more certainty on how the agencies will administer the Business Conduct and Suitability Rules, but would limit the agencies' ability to apply those rules flexibly to take into account potentially distinct aspects of banks acting as government securities brokers or dealers.

(6) Should a bank and its customer be permitted to establish the standards applicable to the relationship between the customer and the bank by agreement, effectively contracting out of the rule? The NASD Suitability Interpretation provides that written and oral agreements between the broker or dealer and an institutional customer will be considered in determining whether the broker or dealer has fulfilled its obligations under the NASD Suitability Rule. Is this sufficient, or should the agencies include a more specific provision for bank contracts? If so, should such a provision be limited to negotiated contracts, contracts with institutional customers, or some other class of contracts? For example, an exclusion could be provided for negotiated contracts, with the presumption that a contract between a bank and an institutional customer, or some class of institutional customers, would be considered to be negotiated.

(7) Under the proposed rule, a customer that is not a bank, savings and loan association, registered investment company, or registered investment advisor, or that does not have total assets of at least $50 million is considered to be a ''non-institutional customer.'' Is $50 million in total assets an appropriate measure for determining which entities should be considered to be institutional customers for the purposes of the rule? Are other measures, such as the amount of ''assets under management'' more appropriate? For example, the NASD Suitability Interpretation and the agencies' proposed interpretation states that, while the interpretations are applicable to any customer that is not a natural person, it is particularly relevant to customers that have at least $10 million in securities in its portfolio or under management. If such a measure is more appropriate, what amount of assets in a portfolio or under management would be appropriate in determining which entities should be treated as institutional customers for the purposes of the rule? Should the agencies adopt a measure that is uniform for both the rule and the interpretation?

A draft rule and interpretation based on the NASD Business Conduct Rule and Suitability Rule and NASD Suitability Interpretation, but modified in certain technical respects as needed to apply to banks, follow.

Regulatory Flexibility Act

Under section 605(b) of the Regulatory Flexibility Act (RFA) (5 U.S.C. 605(b)), the initial regulatory flexibility analysis otherwise required under section 603 of the RFA (5 U.S.C. 603) is not required if the head of the agency certifies that the rule will not have a significant economic impact on a substantial number of small entities and the agency publishes such certification and a succinct statement explaining the reasons for such certification in the Federal Register along with its general notice of proposed rulemaking.

Pursuant to section 605(b) of the RFA, the OCC, Board, and the FDIC each individually certifies that this proposed rule will not have a significant economic impact on a substantial number of small entities. As an initial matter, the proposed rule would apply only to those banks that have given notice or are required to give notice that they are government securities brokers or dealers under section 15C of the Securities Exchange Act of 1934 (15 U.S.C. 780–5) and applicable Treasury rules under section 15C (17 CFR 400.1(d) and 401), including approximately 300 domestic banks and branches of foreign banks. Most small banking institutions are not required to give notice under section 15C, as Treasury rules provide exemptions for financial institutions that engage in fewer than 500 government securities brokerage transactions per year and for financial institutions with government securities dealing activities limited to sales and purchases in a fiduciary capacity. *See* 17 CFR 401.3 and 401.4. Other exemptions from the notice requirements also are available. *See* 17 CFR Part 401.

Additionally, the agencies note that many banks conduct a significant portion of their securities activities through subsidiaries or affiliates that are registered broker-dealers. Securities activities conducted in registered broker-dealers that are NASD members are directly subject to the NASD Rules and would not be subject to the agencies' proposed rule.

Paperwork Reduction Act

In accordance with section 3506 of the Paperwork Reduction Act of 1995

[10] The agencies note that the NASD does not view all of its Fair Practice rules and interpretations as applicable to government securities transactions, and that the manner in which Section 4 is to apply to such transactions remains under consideration. The notice published by the SEC includes an amended summary list of the NASD rules and interpretations and their applicability to transactions in government securities. 61 FR 11655 (March 21, 1996).

[11] Article III, section 27, of the NASD Rules addresses supervision by NASD members, and requires the establishment and maintenance of a system to supervise the activities of personnel that is reasonably designed to achieve compliance with applicable law and rules. In addition to requirements for the establishment of written procedures, internal inspections, designation of persons with supervisory responsibility, and investigation of qualifications of personnel, the rule includes provisions that facilitate oversight by the NASD.

(44 U.S.C. 3506; *see also* 5 CFR 1320 Appendix A.1), the agencies have reviewed the proposed rule and have determined that no collections of information pursuant to the Paperwork Reduction Act are contained in the proposed rule.

OCC Executive Order 12866 Statement

The OCC has determined that this joint proposed rule is not a significant regulatory action as defined in Executive Order 12866.

OCC Unfunded Mandates Act of 1995 Statement

Section 202 of the Unfunded Mandates Reform Act of 1995, Pub. L. 104–4 (Unfunded Mandates Act), requires that an agency prepare a budgetary impact statement before promulgating a rule that includes a Federal mandate that may result in the expenditure by State, local, and tribal governments, in the aggregate, or by the private sector, of $100 million or more in any one year. If a budgetary impact statement is required, section 205 of the Unfunded Mandates Act also requires an agency to identify and consider a reasonable number of regulatory alternatives before promulgating a rule. As discussed in the preamble, the joint proposed rule sets forth sales practice responsibilities of banks that are government securities brokers or dealers. The OCC has therefore determined that the rule will not result in expenditures by State, local, or tribal governments or by the private sector of more than $100 million. Accordingly, the OCC has not prepared a budgetary impact statement or addressed specifically the regulatory alternatives considered.

List of Subjects

12 CFR Part 13

Government securities, National banks.

12 CFR Part 208

Accounting, Agriculture, Banks, banking, Confidential business information, Crime, Currency, Federal Reserve System, Flood insurance, Mortgages, Reporting and recordkeeping requirements, Securities.

12 CFR Part 211

Exports, Federal Reserve System, Foreign Banking, Holding companies, Investments, Reporting and recordkeeping requirements.

12 CFR Part 368

Banks, banking, Government securities.

Office of the Comptroller of the Currency

12 CFR CHAPTER I

Authority and Issuance

For the reasons set out in the preamble, a new part 13 of chapter I of title 12 of the Code of Federal Regulations is proposed to be added to read as follows:

PART 13—GOVERNMENT SECURITIES SALES PRACTICES

Sec.
13.1 Scope.
13.2 Definitions.
13.3 Business conduct.
13.4 Recommendations to customers.
13.5 Customer information.

Interpretations

13.100 Obligations concerning institutional customers.

Authority: 12 U.S.C. 1 *et seq.*, and 93a; 15 U.S.C. 78o-5.

§ 13.1 Scope.

This part applies to national banks that have filed notice as, or are required to file notice as, government securities brokers or dealers pursuant to section 15C of the Securities Exchange Act (15 U.S.C. 78o-5) and Department of Treasury rules under section 15C (17 CFR 401.1(d) and 401).

§ 13.2 Definitions.

(a) *Bank that is a government securities broker or dealer* means a national bank that has filed notice, or is required to file notice, as a government securities broker or dealer pursuant to section 15C of the Securities Exchange Act (15 U.S.C. 78o-5) and Department of Treasury rules under section 15C (17 CFR 401.1(d) and 401).

(b) *Customer* does not include a broker or dealer or a government securities broker or dealer.

(c) *Non-institutional customer* means any customer other than:

(1) A bank, savings association, insurance company, or registered investment company;

(2) An investment advisor registered under section 203 of the Investment Advisors Act of 1940 (15 U.S.C. 80b–3); or

(3) Any entity (whether a natural person, corporation, partnership, trust, or otherwise) with total assets of at least $50 million.

§ 13.3 Business conduct.

A bank that is a government securities broker or dealer shall observe high standards of commercial honor and just and equitable principles of trade in the conduct of its business as a government securities broker or dealer.

§ 13.4 Recommendations to customers.

In recommending to a customer the purchase, sale or exchange of a government security, a bank that is a government securities broker or dealer shall have reasonable grounds for believing that the recommendation is suitable for the customer upon the basis of the facts, if any, disclosed by the customer as to the customer's other security holdings and as to the customer's financial situation and needs.

§ 13.5 Customer information.

Prior to the execution of a transaction recommended to a non-institutional customer, a bank that is a government securities broker or dealer shall make reasonable efforts to obtain information concerning:

(a) The customer's financial status;

(b) The customer's tax status;

(c) The customer's investment objectives; and

(d) Such other information used or considered to be reasonable by the bank in making recommendations to the customer.

Interpretations

§ 13.100 Obligations concerning institutional customers.

(a) Under § 13.4, a bank that is a government securities broker or dealer must have reasonable grounds for believing that a recommendation to a customer concerning a government security is suitable for the customer, based on any facts disclosed by the customer concerning the customer's other security holdings and financial situation and needs. The interpretation in this section identifies factors that may be relevant when considering the bank's compliance with § 13.4 with respect to an institutional customer. These factors are not intended to be requirements or the only factors to be considered, but are offered merely as guidance in determining the scope of a bank's obligations under § 13.4.

(b) The two most important considerations in determining the scope of a bank's obligation under § 13.4 in making recommendations to an institutional customer are the customer's capability to evaluate investment risk independently and the extent to which the customer is exercising independent judgement in evaluating a bank's recommendation. A bank must determine, based on the information available to it, the customer's capability to evaluate investment risk. In some cases, the bank may conclude that the customer is not capable of making independent investment decisions in general. In

other cases, the institutional customer may have general capability, but may not be able to understand a particular type of instrument or its risk. This is more likely to arise with relatively new types of instruments, or those with significantly different risk or volatility characteristics than other investments generally made by the customer. If a customer is either generally not capable of evaluating investment risk or lacks sufficient capability to evaluate the particular product, the scope of a bank's obligation under § 13.4 would not be diminished by the fact that the bank was dealing with an institutional customer. On the other hand, the fact that a customer initially needed help understanding a potential investment need not necessarily imply that the customer did not ultimately develop an understanding and make an independent investment decision.

(c) A bank may conclude that a customer is exercising independent judgement if the customer's investment decision will be based on its own independent assessment of the opportunities and risks presented by a potential investment, market factors and other investment considerations. Where the bank has reasonable grounds for concluding that the institutional customer is making independent investment decisions and is capable of independently evaluating investment risk, then a bank's obligations under § 13.4 for a particular customer are fulfilled. Where a customer has delegated decision-making authority to an agent, such as an investment advisor or a bank trust department, the interpretation in this section shall be applied to the agent.

(d) A determination of capability to evaluate investment risk independently will depend on an examination of the customer's capability to make its own investment decisions, including the resources available to the customer to make informed decisions. Relevant considerations could include:

(1) The use of one or more consultants, investment advisers, or bank trust departments;

(2) The general level of experience of the institutional customer in financial markets and specific experience with the type of instruments under consideration;

(3) The customer's ability to understand the economic features of the security involved;

(4) The customer's ability to independently evaluate how market developments would affect the security; and

(5) The complexity of the security or securities involved.

(e) A determination that a customer is making independent investment decisions will depend on the nature of the relationship that exists between the bank and the customer. Relevant considerations could include:

(1) Any written or oral understanding that exists between the bank and the customer regarding the nature of the relationship between the bank and the customer and the services to be rendered by the bank;

(2) The presence or absence of a pattern of acceptance of the bank's recommendations;

(3) The use by the customer of ideas, suggestions, market views and information obtained from other government securities brokers or dealers or market professionals, particularly those relating to the same type of securities; and

(4) The extent to which the bank has received from the customer current comprehensive portfolio information in connection with discussing recommended transactions or has not been provided important information regarding its portfolio or investment objectives.

(f) These factors are guidelines that will be utilized to determine whether a bank is in compliance with § 13.4 with respect to a specific institutional customer's transaction. The inclusion or absence of any of these factors is not dispositive of the determination of suitability. Such a determination can only be made on a case-by-case basis taking into consideration all the facts and circumstances of a particular bank/customer relationship, assessed in the context of a particular transaction.

(g) For purposes of the interpretation in this section, an institutional customer is any entity other than a natural person. In determining the applicability of the interpretation in this section to an institutional customer, the OCC will consider the dollar value of the securities that the institutional customer has in its portfolio and/or under management. While the interpretation in this section is potentially applicable to any institutional customer, the guidance contained in this section is more appropriately applied to an institutional customer with at least $10 million invested in securities in the aggregate in its portfolio and/or under management.

Dated: April 4, 1996.

Eugene A. Ludwig,

Comptroller of the Currency.

Federal Reserve System

Authority and Issuance

For the reasons set forth in the joint preamble, parts 208 and 211 of chapter II of title 12 of the Code of Federal Regulations are proposed to be amended as follows:

12 CFR CHAPTER II

PART 208—MEMBERSHIP OF STATE BANKING INSTITUTIONS IN THE FEDERAL RESERVE SYSTEM (REGULATION H)

1. The authority citation for Part 208 is revised to read as follows:

Authority: 12 U.S.C. 36, 248(a), 248(c), 321–338a, 371d, 461, 481–486, 601, 611, 1814, 1823(j), 1828(o), 1831o, 1831p–1, 3105, 3310, 3331–3351 and 3906–3909; 15 U.S.C. 78b, 78l(b), 781(g), 781(i), 78o–4(c)(5), 78o–5, 78q, 78q–1, and 78w: 31 U.S.C. 5318; 42 U.S.C. 4012a, 4104a, 4104b, 4106, and 4128.

2. A new § 208.25 is added to subpart A to read as follows:

§ 208.25 Government securities sales practices.

(a) *Scope.* This subpart is applicable to state member banks that have filed notice as, or are required to file notice as, government securities brokers or dealers pursuant to section 15C of the Securities Exchange Act (15 U.S.C. 78o–5) and Department of Treasury rules under section 15C (17 CFR 401.1(d) and 401).

(b) *Definitions.*—(1) *Bank that is a government securities broker or dealer* means a state member bank that has filed notice, or is required to file notice, as a government securities broker or dealer pursuant to section 15C of the Securities Exchange Act (15 USC § 78o–5) and Department of Treasury rules under section 15C (17 CFR 401.1(d) and 401).

(2) *Customer* does not include a broker or dealer or a government securities broker or dealer.

(3) *Non-institutional customer* means any customer other than:

(i) A bank, savings association, insurance company, or registered investment company;

(ii) An investment advisor registered under section 203 of the Investment Advisors Act of 1940 (15 U.S.C. 80b–3); or

(iii) Any entity (whether a natural person, corporation, partnership, trust, or otherwise) with total assets of at least $50 million.

(c) *Business conduct.* A bank that is a government securities broker or dealer

shall observe high standards of commercial honor and just and equitable principles of trade in the conduct of its business as a government securities broker or dealer.

(d) *Recommendations to customers.* In recommending to a customer the purchase, sale or exchange of a government security, a bank that is a government securities broker or dealer shall have reasonable grounds for believing that the recommendation is suitable for the customer upon the basis of the facts, if any, disclosed by the customer as to the customer's other security holdings and as to the customer's financial situation and needs.

(e) *Customer information.* Prior to the execution of a transaction recommended to a non-institutional customer, a bank that is a government securities broker or dealer shall make reasonable efforts to obtain information concerning:

(1) The customer's financial status;

(2) The customer's tax status;

(3) The customer's investment objectives; and

(4) Such other information used or considered to be reasonable by the bank in making recommendations to the customer.

3. A new § 208.129 is added to Subpart B to read as follows:

§ 208.129 Obligations concerning institutional customers.

(a) Under § 208.25(d), a bank that is a government securities broker or dealer must have reasonable grounds for believing that a recommendation to a customer concerning a government security is suitable for the customer, based on any facts disclosed by the customer concerning the customer's other security holdings and financial situation and needs. The interpretation in this section identifies factors that may be relevant when considering the bank's compliance with § 208.25(d) with respect to an institutional customer. These factors are not intended to be requirements or the only factors to be considered, but are offered merely as guidance in determining the scope of a bank's obligations under § 208.25(d).

(b) The two most important considerations in determining the scope of a bank's obligation under § 208.25(d) in making recommendations to an institutional customer are the customer's capability to evaluate investment risk independently and the extent to which the customer is exercising independent judgement in evaluating a bank's recommendation. A bank must determine, based on the information available to it, the customer's capability to evaluate investment risk. In some cases, the bank may conclude that the customer is not capable of making independent investment decisions in general. In other cases, the institutional customer may have general capability, but may not be able to understand a particular type of instrument or its risk. This is more likely to arise with relatively new types of instruments, or those with significantly different risk or volatility characteristics than other investments generally made by the customer. If a customer is either generally not capable of evaluating investment risk or lacks sufficient capability to evaluate the particular product, the scope of a bank's obligation under § 208.25(d) would not be diminished by the fact that the bank was dealing with an institutional customer. On the other hand, the fact that a customer initially needed help understanding a potential investment need not necessarily imply that the customer did not ultimately develop an understanding and make an independent investment decision.

(c) A bank may conclude that a customer is exercising independent judgement if the customer's investment decision will be based on its own independent assessment of the opportunities and risks presented by a potential investment, market factors and other investment considerations. Where the bank has reasonable grounds for concluding that the institutional customer is making independent investment decisions and is capable of independently evaluating investment risk, then a bank's obligations under § 208.25(d) for a particular customer are fulfilled. Where a customer has delegated decision-making authority to an agent, such as an investment advisor or a bank trust department, this interpretation shall be applied to the agent.

(d) A determination of capability to evaluate investment risk independently will depend on an examination of the customer's capability to make its own investment decisions, including the resources available to the customer to make informed decisions. Relevant considerations could include:

(1) The use of one or more consultants, investment advisers or bank trust departments;

(2) The general level of experience of the institutional customer in financial markets and specific experience with the type of instruments under consideration;

(3) The customer's ability to understand the economic features of the security involved;

(4) The customer's ability to independently evaluate how market developments would affect the security; and

(5) The complexity of the security or securities involved.

(e) A determination that a customer is making independent investment decisions will depend on the nature of the relationship that exists between the bank and the customer. Relevant considerations could include:

(1) Any written or oral understanding that exists between the bank and the customer regarding the nature of the relationship between the bank and the customer and the services to be rendered by the bank;

(2) The presence or absence of a pattern of acceptance of the bank's recommendations;

(3) The use by the customer of ideas, suggestions, market views and information obtained from other government securities brokers or dealers or market professionals, particularly those relating to the same type of securities; and

(4) The extent to which the bank has received from the customer current comprehensive portfolio information in connection with discussing recommended transactions or has not been provided important information regarding its portfolio or investment objectives.

(f) These factors are guidelines that will be utilized to determine whether a bank is in compliance with § 208.25(d) with respect to a specific institutional customer's transaction. The inclusion or absence of any of these factors is not dispositive of the determination of suitability. Such a determination can only be made on a case-by-case basis taking into consideration all the facts and circumstances of a particular bank/customer relationship, assessed in the context of a particular transaction.

(g) For purposes of the interpretation in this section, an institutional customer is any entity other than a natural person. In determining the applicability of the interpretation in this section to an institutional customer, the Board will consider the dollar value of the securities that the institutional customer has in its portfolio and/or under management. While the interpretation in this section is potentially applicable to any institutional customer, the guidance contained in this section is more appropriately applied to an institutional customer with at least $10 million invested in securities in the aggregate in its portfolio and/or under management.

PART 211—INTERNATIONAL BANKING OPERATIONS (REGULATION K)

1. The authority citation for Part 211 is revised to read as follows:

Authority: 12 U.S.C. 221 *et seq.*, 1818, 1841 *et seq.*, 3101 *et seq.*, 3109 *et seq.*; 15 U.S.C. 78o-5.

2. Section 211.24 is amended by revising the section heading and adding a new paragraph (g) to read as follows:

§ 211.24 Approval of offices of foreign banks; procedures for applications; standards for approval; representative-office activities and standards for approval; preservation of existing authority; reports of crimes and suspected crimes; government securities sales practices.

* * * * *

(g) *Government securities sales practices* An uninsured state-licensed branch or agency of a foreign bank that is required to give notice to the Board under section 15C of the Securities Exchange Act of 1934 (15 U.S.C. 78o-5) and the Department of the Treasury rules under section 15C (17 CFR 400.1(d) and 401) shall be subject to the provisions of 12 CFR 208.25 to the same extent as a state member bank that is required to give such notice.

By order of the Board of Governors of the Federal Reserve Board, April 17, 1996.

William W. Wiles,

Secretary of the Board.

Federal Deposit Insurance Corporation

Authority and Issuance

For the reasons set out in the preamble, a new part 368 of chapter III of title 12 of the Code of Federal Regulations is proposed to be added to read as follows:

12 CFR CHAPTER III

PART 368—GOVERNMENT SECURITIES SALES PRACTICES

Sec.
368.1 Scope.
368.2 Definitions.
368.3 Business conduct.
368.4 Recommendations to customers.
368.5 Customer information.
368.100 Interpretations.

Authority: 15 U.S.C. 78o-5.

§ 368.1 Scope.

This part is applicable to state nonmember banks and insured state branches of foreign banks that have filed notice as, or are required to file notice as, government securities brokers or dealers pursuant to section 15C of the Securities Exchange Act (15 U.S.C. 78o-5) and Department of Treasury rules under section 15C (17 CFR 401.1(d) and 401).

§ 368.2 Definitions.

(a) *Bank that is a government securities broker or dealer* means a state nonmember bank or an insured state branch of a foreign bank that has filed notice, or is required to file notice, as a government securities broker or dealer pursuant to section 15C of the Securities Exchange Act (15 U.S.C. 78o-5) and Department of Treasury rules under section 15C (17 CFR 401.1(d) and 401).

(b) *Customer* does not include a broker or dealer or a government securities broker or dealer.

(c) *Non-institutional customer* means any customer other than:

(1) A bank, savings association, insurance company, or registered investment company;

(2) An investment advisor registered under section 203 of the Investment Advisors Act of 1940 (15 U.S.C. 80b-3); or

(3) Any entity (whether a natural person, corporation, partnership, trust, or otherwise) with total assets of at least $50 million.

§ 368.3 Business conduct.

A bank that is a government securities broker or dealer shall observe high standards of commercial honor and just and equitable principles of trade in the conduct of its business as a government securities broker or dealer.

§ 368.4 Recommendations to customers.

In recommending to a customer the purchase, sale or exchange of a government security, a bank that is a government securities broker or dealer shall have reasonable grounds for believing that the recommendation is suitable for the customer upon the basis of the facts, if any, disclosed by the customer as to the customer's other security holdings and as to the customer's financial situation and needs.

§ 368.5 Customer information.

Prior to the execution of a transaction recommended to a non-institutional customer, a bank that is a government securities broker or dealer shall make reasonable efforts to obtain information concerning:

(a) The customer's financial status;

(b) The customer's tax status;

(c) The customer's investment objectives; and

(d) Such other information used or considered to be reasonable by such bank in making recommendations to the customer.

§ 368.100 Interpretation.

(a) Under § 368.4, a bank that is a government securities broker or dealer must have reasonable grounds for believing that a recommendation to a customer concerning a government security is suitable for the customer, based on any facts disclosed by the customer concerning the customer's other security holdings and financial situation and needs. The interpretation in this section identifies factors that may be relevant when considering the bank's compliance with § 368.4 with respect to an institutional customer. These factors are not intended to be requirements or the only factors to be considered, but are offered merely as guidance in determining the scope of a bank's obligations under § 368.4.

(b) The two most important considerations in determining the scope of a bank's obligation under § 368.4 in making recommendations to an institutional customer are the customer's capability to evaluate investment risk independently and the extent to which the customer is exercising independent judgement in evaluating a bank's recommendation. A bank must determine, based on the information available to it, the customer's capability to evaluate investment risk. In some cases, the bank may conclude that the customer is not capable of making independent investment decisions in general. In other cases, the institutional customer may have general capability, but may not be able to understand a particular type of instrument or its risk. This is more likely to arise with relatively new types of instruments, or those with significantly different risk or volatility characteristics than other investments generally made by the customer. If a customer is either generally not capable of evaluating investment risk or lacks sufficient capability to evaluate the particular product, the scope of a bank's obligation under § 368.4 would not be diminished by the fact that the bank was dealing with an institutional customer. On the other hand, the fact that a customer initially needed help understanding a potential investment need not necessarily imply that the customer did not ultimately develop an understanding and make an independent investment decision.

(c) A bank may conclude that a customer is exercising independent judgement if the customer's investment decision will be based on its own independent assessment of the opportunities and risks presented by a potential investment, market factors and other investment considerations. Where

the bank has reasonable grounds for concluding that the institutional customer is making independent investment decisions and is capable of independently evaluating investment risk, then a bank's obligations under § 368.4 for a particular customer are fulfilled. Where a customer has delegated decision-making authority to an agent, such as an investment advisor or a bank trust department, the interpretation in this section shall be applied to the agent.

(d) A determination of capability to evaluate investment risk independently will depend on an examination of the customer's capability to make its own investment decisions, including the resources available to the customer to make informed decisions. Relevant considerations could include:

(1) The use of one or more consultants, investment advisers or bank trust departments;

(2) The general level of experience of the institutional customer in financial markets and specific experience with the type of instruments under consideration;

(3) The customer's ability to understand the economic features of the security involved;

(4) The customer's ability to independently evaluate how market developments would affect the security; and

(5) The complexity of the security or securities involved.

(e) A determination that a customer is making independent investment decisions will depend on the nature of the relationship that exists between the bank and the customer. Relevant considerations could include:

(1) Any written or oral understanding that exists between the bank and the customer regarding the nature of the relationship between the bank and the customer and the services to be rendered by the bank;

(2) The presence or absence of a pattern of acceptance of the bank's recommendations;

(3) The use by the customer of ideas, suggestions, market views and information obtained from other government securities brokers or dealers or market professionals, particularly those relating to the same type of securities; and

(4) The extent to which the bank has received from the customer current comprehensive portfolio information in connection with discussing recommended transactions or has not been provided important information regarding its portfolio or investment objectives.

(f) These factors are guidelines that will be utilized to determine whether a bank is in compliance with § 368.4 with respect to a specific institutional customer's transaction. The inclusion or absence of any of these factors is not dispositive of the determination of suitability. Such a determination can only be made on a case-by-case basis taking into consideration all the facts and circumstances of a particular bank/customer relationship, assessed in the context of a particular transaction.

(g) For purposes of the interpretation in this section, an institutional customer is any entity other than a natural person. In determining the applicability of the interpretation in this section to an institutional customer, the FDIC will consider the dollar value of the securities that the institutional customer has in its portfolio and/or under management. While the interpretation in this section is potentially applicable to any institutional customer, the guidance contained in this section is more appropriately applied to an institutional customer with at least $10 million invested in securities in the aggregate in its portfolio and/or under management.

By order of the Board of Directors, dated at Washington, D.C., this 4th day of April, 1996.

Federal Deposit Insurance Corporation.

Robert E. Feldman,

Deputy Executive Secretary.

[FR Doc. 96–9919 Filed 4–24–96; 8:45 am]

BILLING CODES: 4810–33–P, 6210–01–P, 6714–01–P

federal register

Thursday
April 25, 1996

Part III

Department of Defense

General Services Administration

National Aeronautics and Space Administration

48 CFR Parts 14, 15, and 52

Federal Acquisition Regulation; Consideration of Late Offers; Proposed Rule

DEPARTMENT OF DEFENSE

GENERAL SERVICES ADMINISTRATION

NATIONAL AERONAUTICS AND SPACE ADMINISTRATION

48 CFR Parts 14, 15, and 52

[FAR Case 95–019]

RIN 9000–AG89

Federal Acquisition Regulation; Consideration of Late Offers

AGENCIES: Department of Defense (DOD), General Services Administration (GSA), and National Aeronautics and Space Administration (NASA).

ACTION: Proposed rule.

SUMMARY: The Civilian Agency Acquisition Council and the Defense Acquisition Regulations Council are proposing to amend the Federal Acquisition Regulations (FAR) to broaden the conditions under which late offers for procurements other than commercial items can be considered. This regulatory action was not subject to Office of Management and Budget review under Executive Order 12866, dated September 30, 1993.

DATES: Comments should be submitted on or before June 24, 1996 to be considered in the formulation of a final rule.

ADDRESSES: Interested parties should submit written comments to: General Services Administration, FAR Secretariat (VRS), 18th & F Streets NW., Room 4037, Washington, DC 20405.

Please cite FAR case 95–019 in all correspondence related to this case.

FOR FURTHER INFORMATION CONTACT: Mr. Ralph DeStefano at (202) 501–1758 in reference to this FAR case. For general information, contact the FAR Secretariat, Room 4037, GS Building, Washington, DC 20405 (202) 501–4755. Please cite FAR case 95–019.

SUPPLEMENTARY INFORMATION:

A. Background

The proposed coverage amends the late bid rule to allow an offer to be accepted if Government mishandling after receipt at the Government installation is determined (by the Government) to be the primary cause of delay. The proposed rule recognizes use of hand-carried offers as a common business practice, (consistent with GAO case law); proposes a change to provide more flexibility in determining when an offer (bid or proposal) was received at the Government installation (again by applying standards used by the GAO); expands the definition of acceptable evidence to prove mishandling beyond a date/time stamp or other documentary evidence of receipt, to include oral testimony and statements of Government personnel; and adds a new exception at 52.215–10(a)(5) which would allow consideration of a proposal which was misdirected or misdelivered (not necessarily through mishandling) to an office other than that designated in the solicitation. This exception would require that there be a reasonable basis to conclude that the offer was delivered into Government control prior to the time proposals were due, that it was thus out of the offeror's control, and, in the determination of the contracting officer, accepting the offer would not unduly delay the procurement.

These changes will not apply to commercial items solicitations which contain 52.212–1(f), Late Offers.

B. Regulatory Flexibility Act

This proposed rule is not expected to have a significant economic impact on a substantial number of small entities within the meaning of the Regulatory Flexibility Act, 5 U.S.C. 601, *et seq.*, because the rule only applies in situations where late offers are received. An Initial Regulatory Flexibility Analysis has, therefore, not been performed. Comments from small entities concerning the affected FAR subpart will be considered in accordance with 5 U.S.C. 610 of the Act. Such comments must be submitted separately and should cite 5 U.S.C. 601, *et seq.* (FAR case 95–019), in correspondence.

C. Paperwork Reduction Act

The Paperwork Reduction Act does not apply because the proposed changes to the FAR do not impose recordkeeping or information collection requirements, or collections of information from offerors, contractors, or members of the public which require the approval of the Office of Management and Budget under 44 U.S.C. 3501, *et seq.*

List of Subjects in 48 CFR Parts 14, 15, and 52

Government procurement.

Dated: April 18, 1996.

Edward C. Loeb,

Director, Federal Acquisition Policy Division.

Therefore, it is proposed that 48 CFR Parts 14, 15, and 52 be amended as set forth below:

1. The authority citation for 48 CFR Parts 14, 15, and 52 continues to read as follows:

Authority: 40 U.S.C. 486(c); 10 U.S.C. chapter 137; and 42 U.S.C. 2473(c).

PART 14—SEALED BIDDING

2. Section 14.304–1 is amended by revising paragraphs (a)(2) and (c) to read as follows:

14.304–1 General.

* * * * *

(a) * * *

(2) It was sent by mail (or telegram or facsimile if authorized) or hand-carried (including delivery by a commercial carrier) and if it is determined by the Government that Government mishandling after receipt at the Government installation was the primary cause of delay;

* * * * *

(c) Acceptable evidence to establish the time of receipt at the Government installation includes the time/date stamp of such installation on the bid wrapper, other documentary evidence of receipt maintained by the installation, or oral testimony or statements of Government personnel.

* * * * *

PART 15—CONTRACTING BY NEGOTIATION

3. Section 15.412 is amended by revising paragraph (c) to read as follows:

15.412 Late proposals, modifications, and withdrawals of proposals

* * * * *

(c) Proposals, and modifications to them, that are received in the designated Government office after the exact time specified are ''late''and shall be considered only if (1) they are received before award is made, and (2) the circumstances meet the specific requirements of the provision at 52.215–10, Late Submissions, Modifications, and Withdrawals of Proposals.

* * * * *

PART 52—SOLICITATION PROVISIONS AND CONTRACT CLAUSES

4. Section 52.214–5 is amended by revising the date of the provision; revising paragraph (a)(2); redesignating paragraphs (b) through (d) as (c) through (e), respectively; and adding a new paragraph (b) to read as follows:

52.214–5 Submission of Bids.

* * * * *

Submission of Bids (Date)

(a) * * * (2) showing the time and date specified for receipt, the solicitation number, and the name and address of the bidder.

(b) Bidders using commercial carrier services shall ensure that the bid is addressed

and marked as prescribed in paragraphs (a)(1) and (2) of this provision when delivered to the office specified in the solicitation.

* * * * *

5. Section 52.214–7 is amended by revising the date of the provision; and revising paragraphs (a)(2) and (d) to read as follows:

52.214–7 Late Submissions, Modifications, and Withdrawals of Bids.

Late Submissions, Modifications, and Withdrawals of Bids (Date)

* * * * *

(a) * * *

(2) Was sent by mail (or telegram or facsimile, if authorized) or hand-carried (including delivery by a commercial carrier) and if it is determined by the Government that Government mishandling after receipt at the Government installation was the primary cause of delay;

* * * * *

(d) Acceptable evidence to establish the time of receipt at the Government installation includes the time/date stamp of that installation on the proposal wrapper, other documentary evidence of receipt maintained by the installation, or oral testimony or statements of Government personnel.

* * * * *

6. Section 52.214–23 is amended by revising the date of the provision; and by revising paragraphs (a)(2) and (e) to read as follows:

52.214–23 Late Submissions, Modifications, and Withdrawals of Technical Proposals under Two-Step Sealed Bidding.

* * * * *

Late Submissions, Modifications, and Withdrawals of Technical Proposals Under Two-Step Sealed Bidding (Date)

(a) * * *

(2) Was sent by mail (or telegram or facsimile, if authorized) or hand-carried (including delivery by a commercial carrier) and if it is determined by the Government that Government mishandling after receipt at the Government installation was the primary cause of delay;

* * * * *

(e) Acceptable evidence to establish the time of receipt at the Government installation includes the time/date stamp of that installation on the proposal wrapper, other documentary evidence of receipt maintained by the installation, or oral testimony or statements of Government personnel.

* * * * *

7. Section 52.214–32 is amended by revising the date of the provision; and by revising paragraphs (a)(1) and (c) to read as follows:

52.214–32 Late Submissions, Modifications, and Withdrawals of Bids (Overseas).

* * * * *

Late Submissions, Modifications, and Withdrawals of Bids (Overseas) (Date)

(a) * * *

(1) Was sent by mail (or telegram or facsimile, if authorized) or hand-carried (including delivery by a commercial carrier) and if it is determined by the Government that Government mishandling after receipt at the Government installation was the primary cause of delay; or

* * * * *

(c) Acceptable evidence to establish the time of receipt at the Government installation includes the time/date stamp of that installation on the proposal wrapper, other documentary evidence of receipt maintained by the installation, or oral testimony or statements of Government personnel.

* * * * *

8. Section 52.214–33 is amended by revising the date of the provision; and by revising paragraphs (a)(1) and (d) to read as follows:

52.214–33 Late Submissions, Modifications, and Withdrawals of Technical Proposals Under Two-Step Sealed Bidding (Overseas).

* * * * *

Late Submissions, Modifications, and Withdrawals of Technical Proposals Under Two-Step Sealed Bidding (Overseas) (Date)

(a) * * *

(1) Was sent by mail (or telegram or facsimile, if authorized) or hand-carried (including delivery by a commercial carrier) and if it is determined by the Government that Government mishandling after receipt at the Government installation was the primary cause of delay;

* * * * *

(d) Acceptable evidence to establish the time of receipt at the Government installation includes the time/date stamp of that installation on the proposal wrapper, other documentary evidence of receipt maintained by the installation, or oral testimony or statements of Government personnel.

9. Section 52.215–9 is amended by revising the date of the provision; by revising paragraph (a)(2); redesignating paragraphs (b) through (e) as (c) through (f), respectively, and adding a new paragraph (b) to read as follows:

52.215–9 Submission of Offers.

* * * * *

Submission of Offers (Date)

(a) * * * (2) showing the time and date specified for receipt, the solicitation number, and the name and address of the offeror.

(b) Offerors using commercial carrier services shall ensure that the proposal is addressed and marked as prescribed in subparagraphs (a)(1) and (2) of this provision when delivered to the office specified in the solicitation.

* * * * *

10. Section 52.215–10 is amended by revising the date of the provision; by revising paragraphs (a) and (b); by removing paragraph (c) and redesignating paragraphs (d) through (h) as (c) through (g), respectively, and revising the newly designated (d) to read as follows:

52.215–10 Late Submissions, Modifications, and Withdrawals of Proposals.

* * * * *

Late Submissions, Modifications, and Withdrawals of Proposals (Date)

(a) Any proposal received at the office designated in the solicitation after the exact time specified for receipt of offers will not be considered unless it is received before award is made and—

(1) It was sent by registered or certified mail not later than the fifth calendar day before the date specified for receipt of offers (e.g., an offer submitted in response to a solicitation requiring receipt of offers by the 20th of the month must have been mailed by the 15th);

(2) It was sent by mail (or telegram or facsimile, if authorized) or hand-carried (including delivery by a commercial carrier) and if it is determined by the Government that Government mishandling after receipt at the Government installation was the primary cause of delay;

(3) It was sent by U.S. Postal Service Express Mail Next Day Service-Post Office to Addressee, not later than 5:00 p.m. at the place of mailing two working days prior to the date specified for receipt of proposals. The term ''working days'' excludes weekends and U.S. Federal holidays;

(4) It was transmitted through an electronic commerce method authorized by the solicitation and was received by the Government not later than 5:00 p.m. one working day prior to the date specified for receipt of proposals;

(5) There is acceptable evidence to establish that it was received at the activity issuing the solicitation and was under the Government's control prior to the time set for receipt of offers, and the Contracting Officer determines that accepting the late offer would not unduly delay the procurement; or

(6) It is the only proposal received.

(b) Any modification of a proposal or quotation, including a modification resulting from the Contracting Officer's request for ''best and final'' offer, is subject to the same conditions as in subparagraphs (a) (1), (2), (3), (4) and (5) of this provision.

* * * * *

(d) Acceptable evidence to establish the time of receipt at the Government installation includes the time/date stamp of that installation on the proposal wrapper, other documentary evidence of receipt maintained by the installation, or oral testimony or statements of Government personnel.

* * * * *

11. Section 52.215–36 is amended by revising the date of the provision; by revising paragraphs (a)(1) through (3) and (b); by removing paragraph (c) and redesignating paragraphs (d) through (f) as (c) through (e), respectively; and

revising the newly designated paragraph (c) to read as follows:

52.215–36 Late Submissions, Modifications, and Withdrawals of Proposals (Overseas).

* * * * *

Late Submissions, Modifications, and Withdrawals of Proposals (Overseas) (Date)

(a) * * *

(1) Was sent by mail (or telegram or facsimile, if authorized) or hand-carried (including delivery by a commercial carrier) and if it is determined by the Government that Government mishandling after receipt at the Government installation was the primary cause of delay;

(2) Was transmitted through an electronic commerce method authorized by the solicitation and was received by the Government not later than 5:00 p.m. one working day prior to the date specified for receipt of proposals;

(3) There is acceptable evidence to establish that it was received at the activity issuing the solicitation and was under the Government's control prior to the time set for receipt of offers, and the Contracting Officer determines that accepting the late offer would not unduly delay the procurement; or

(b) Any modification of a proposal or quotation, including a modification resulting from the Contracting Officer's request for ''best and final'' offer, is subject to the same conditions as in subparagraphs (a)(1), (2), and (3) of this provision.

(c) Acceptable evidence to establish the time of receipt at the Government installation includes the time/date stamp of the installation on the proposal wrapper, other documentary evidence of receipt maintained by the installation, or oral testimony or statements of Government personnel.

* * * * *

[FR Doc. 96–10043 Filed 4–24–96; 8:45 am]

BILLING CODE 6820–EP–P

Reader Aids

Federal Register

Vol. 61, No. 81

Thursday, April 25, 1996

CUSTOMER SERVICE AND INFORMATION

Federal Register/Code of Federal Regulations

General Information, indexes and other finding aids	**202–523–5227**
Public inspection announcement line	**523–5215**

Laws

Public Laws Update Services (numbers, dates, etc.)	**523–6641**
For additional information	**523–5227**

Presidential Documents

Executive orders and proclamations	**523–5227**
The United States Government Manual	**523–5227**

Other Services

Electronic and on-line services (voice)	**523–4534**
Privacy Act Compilation	**523–3187**
TDD for the hearing impaired	**523–5229**

ELECTRONIC BULLETIN BOARD

Free Electronic Bulletin Board service for Public Law numbers, Federal Register finding aids, and list of documents on public inspection. **202–275–0920**

FAX-ON-DEMAND

You may access our Fax-On-Demand service. You only need a fax machine and there is no charge for the service except for long distance telephone charges the user may incur. The list of documents on public inspection and the daily Federal Register's table of contents are available using this service. The document numbers are 7050-Public Inspection list and 7051-Table of Contents list. The public inspection list will be updated immediately for documents filed on an emergency basis.

NOTE: YOU WILL ONLY GET A LISTING OF DOCUMENTS ON FILE AND NOT THE ACTUAL DOCUMENT. Documents on public inspection may be viewed and copied in our office located at 800 North Capitol Street, N.W., Suite 700. The Fax-On-Demand telephone number is: **301–713–6905**

FEDERAL REGISTER PAGES AND DATES, APRIL

14233–14464 1
14465–14606 2
14607–14948 3
14949–15176 4
15177–15362 5
15363–15694 8
15695–15874 9
15875–16042 10
16043–16202 11
16203–16374 12
16375–16614 15
16615–16702 16
16703–16872 17
16873–17226 18
17227–17546 19
17547–17822 22
17823–18046 23
18047–18228 24
18229–18482 25

CFR PARTS AFFECTED DURING APRIL

At the end of each month, the Office of the Federal Register publishes separately a List of CFR Sections Affected (LSA), which lists parts and sections affected by documents published since the revision date of each title.

3 CFR

Proclamations:
6874 14233
6875 14603
6876 14605
6877 15177
6878 15363
6879 15871
6880 16035
6881 16037
6882 16611
6883 16613
6885 17545
6886 18041
6887 18043
6888 18045

Executive Orders:
11880 (Amended by EO 12998) 15873
12821 (Superseded by EO 12999) 17227
12997 14949
12998 15873
12999 17227

Administrative Orders:
Memorandum:
April 8, 1996 16039
April 22, 1996 18229
April 22, 1996 18231
Presidential Determinations:
No. 96–19 of March 19, 1996 14235

5 CFR

Ch. XIV 16043
890 15177

7 CFR

17 17823
58 .....15875, 17547
301 .....17550, 18233
353 15365
354 15365
911 17551
915 17551
927 17553
932 17555
982 17556
985 15695
1131 17561
1208 14951
1435 15881

Proposed Rules:
1 16231
15 17851
15d 17851
51 17580
330 15201
457 18293
929 17586
946 17587
999 15734
1002 14514
1004 14514
1106 17588
3550 15395

9 CFR

78 .....14237, 15881
92 .....14239, 17231
98 .....15180, 17231
318 18047
381 18047

Proposed Rules:
77 14982
91 14982
92 .....14268, 16978
93 16978
94 .....14999, 15201, 16978
95 16978
96 16978
98 16978

10 CFR

170 16203
171 16203

Proposed Rules:
50 15427
52 18099
73 16067
430 17589
437 15736
1021 17257

11 CFR

100 18049
110 18049
114 18049

12 CFR

219 14382
226 14952
621 18235

Proposed Rules:
13 18470
208 18470
211 18470
368 18470
614 16403
619 16403
932 17603

13 CFR

301 15371

14 CFR

11 18052
25 .....14607, 15372
31 18220
33 16375
39 .....14240, 14242, 14608, 14960, 14961, 15184, 15882, 16226, 16377, 16379, 16382, 16384, 16703, 16873, 17562,

17824, 17825, 18052, 18236, 18238, 18242
71 .....17826, 18058, 18059, 18060, 18061, 18062
73.....18062
91.....16287
95.....18064, 18065
97 .....18066, 18068, 18069
221.....18070
311.....17564
399.....17565
Proposed Rules:
25.....14684
39 .....14269, 14271, 14273, 14275, 14515, 15000, 15002, 15430, 15738, 15903, 15904, 15906, 15908, 16412, 16413, 16414, 16416, 16418, 16420, 17257, 17259, 17261, 17853, 17855, 18299, 18303
71 .....15432, 15434, 15740, 15742, 16287, 17606, 17607
73.....17608
121.....18099

15 CFR

30.....15697
769.....14243
902.....14465, 15884
922.....14963

16 CFR

303.....16385
1500.....18245
1507.....18245
Proposed Rules:
239.....14688
254.....14685
406.....14686
700.....14688
701.....14688
702.....14688

17 CFR

200.....15338
Proposed Rules:
228.....17108
229.....17108
240.....17108, 18306
242.....17108

18 CFR

Proposed Rules:
35.....17263

20 CFR

404.....18075
422.....18075
498.....18078
Proposed Rules:
348.....16067
416.....17609
656.....17610

21 CFR

Ch. I.....14478, 16422
1.....14244
2.....15699
5.....14375
101.....16423
172.....14481
173.....14481, 17828
175.....14481
176.....14481
177.....14481, 14964
178.....14481
180.....14481
181.....14481
189.....14481
201.....17798
331.....17798
341.....15700
510.....15703, 17565
520.....15185
522.....14482
529.....17829
558 .....14483, 17566, 18081
573.....15703
803.....16043
807.....16043
814.....15186
1310.....17958
1313.....17566
1316.....17566
Proposed Rules:
25.....14922
71.....14690
170.....14690
171.....14690
201.....17807
331.....17807
510.....15003
886.....14277
900 .....14856, 14870, 14884, 14898, 14908

22 CFR

92.....14375
514.....15372

23 CFR

230.....14615
625.....17566
635.....17243
710.....18246
712.....18246
720.....18246
740.....18246
1309.....18247
Proposed Rules:
230.....17264
1325.....16729
1327.....16729

24 CFR

0.....15350
4.....14448
12.....14448
100.....14378, 18248
103.....14378, 18248
109.....14378, 18248
200.....14396, 14410
207.....14396
213.....14396
215.....14396, 16172
219.....14396
220.....14396
221.....14396
222.....14396
231.....14396
232.....14396, 14410
233.....14396
234.....14396
236.....14396, 16172
237.....14396
241.....14396, 14410
242.....14396
244.....14396
248.....14396
265.....14396
267.....14396
583.....17245
811.....14456, 16045
813.....16172
913.....16172
950.....16172
990.....17538
3280.....18249
3500.....14617
Proposed Rules:
26.....18026
28.....18026
30.....18026
50.....15340
81.....18026
200.....18026
950.....18026
965.....18026
3280.....18014
3500.....18026

25 CFR

151.....18082
1001.....17830
Proposed Rules:
Ch. I.....17857, 18100

26 CFR

1 .....14247, 14248, 15891, 17572
31.....17572
602.....14248, 17572
Proposed Rules:
1 .....14517, 15204, 15743, 17614
31.....17614
35a.....17614
301.....17265, 17614
502.....17614
503.....17614
509.....17614
513.....17614
514.....17614
516.....17614
517.....17614
520.....17614
521.....17614

28 CFR

25.....17575
547.....16374
Proposed Rules:
36.....16232, 16233
74.....17667
553.....14440

29 CFR

1614.....17576
1625.....15374
Proposed Rules:
1904.....15435
1910.....15205
1915.....15205
1926.....15205
1952.....15435
2509.....14690
2520.....14690
2550.....14690
2610.....16387
2619.....16388
2622.....16387
2644.....16391
2676.....16388

30 CFR

756.....17833
914.....15378, 15891
943.....15380
Proposed Rules:
Ch. II.....17266
6.....15743
18.....15743
19.....15743
20.....15743
21.....15743
22.....15743
23.....15743
26.....15743
27.....15743
29.....15743
33.....15743
35.....15743
70.....18308
71.....18308
218.....17266
250.....18309
745.....15005
900.....15005
901.....15005
906.....15005
913.....15005
914.....15435
925.....14517
926.....15005, 15910
931.....15005
934.....15005, 18100
935.....15005, 16731
936.....15005, 15435
944.....15005
946.....15005
948.....15005, 17859
950.....15005

31 CFR

103 .....14248, 14382, 14383, 14386, 18204, 18250
535.....15382
Proposed Rules:
321.....14444

32 CFR

40a.....16704
375.....18083
379.....18083
706 .....14966, 14967, 14968, 14969
861.....17840
865.....16046
Proposed Rules:
117.....15437
619.....15010

33 CFR

1.....18250
100 .....14249, 16709, 16711, 17246, 17841
110.....16711
117 .....14970, 17247, 17248
165 .....16714, 16716, 16717, 17249
175.....15162
179.....15162
181.....15162
Proposed Rules:
100 .....16732, 16885, 17269, 17270
110.....17861
117.....16736
165.....14518, 16886

34 CFR

76.....14483

81 14483
682 16718

35 CFR

70 16718

36 CFR

7 14617
223 14618
292 14621
1253 14971
1275 17842

Proposed Rules:

242 15014
1190 17271
1191 ....16232, 16233, 17271

38 CFR

1 14596
21 15190

39 CFR

111 ....17190, 17206

Proposed Rules:

111 15205

40 CFR

9 16290
51 16050
52 ....14484, 14487, 14489, 14491, 14493, 14634, 14972, 14974, 14975, 15704, 15706, 15709, 15713, 15715, 15717, 15719, 16050, 16229, 17576, 18251, 18255, 18257, 18259
60 ....14634, 15721, 17358, 18260
61 18260
63 ....17358, 18280
70 ....16063, 18083
80 16391
81 14496
148 ....15566, 15660
167 14497
180 ....14637, 15192, 15895, 15896, 15900
185 15893
186 ....15192, 15900
260 ....16290, 17358
261 ....16290, 17358, 18088
262 16290
263 16290
264 ....16290, 17358
265 ....16290, 17358
266 ....16290, 17358
268 ....15566, 15660
270 17358
271 ....15566, 17358, 18281, 18284
273 16290
300 ....15902, 18287
403 ....15566, 15660
716 14596

Proposed Rules:

51 16068
52 ....14520, 14521, 14522, 14694, 15020, 15744, 15745, 15751, 15752, 16050, 16738, 17669, 17675, 18310, 18311
59 14531
60 17358
63 17358
68 ....16598, 16606
80 16432
81 ....14522, 16738
85 16738
141 16348
142 16348
180 ....14694, 15911, 15913, 16740, 16742, 16745, 16747
260 17358
261 ....14696, 17358
262 17842
264 ....17358, 17863
265 ....17358, 17863
266 17358
270 ....17358, 17863
271 17358
300 ....14280, 16068, 16229
440 15917
721 17272

41 CFR

101–25 14978

42 CFR

405 14640
491 14640

Proposed Rules:

413 17677

43 CFR

Group 8400 15722
10010 16719

Proposed Rules:

8000 15753
8300 15753

44 CFR

64 ....14497, 15723, 18287
65 ....14658, 14661, 16874, 17251
67 ....14665, 16875

Proposed Rules:

62 14709
67 ....14715, 16887

45 CFR

74 15564
1633 14250
1634 14252
1635 14261

Proposed Rules:

1301 17754
1303 17754
1304 17754
1305 17754
1306 17754
1308 17754

46 CFR

2 15162
67 17814
159 ....15162, 15868
160 ....15162, 15868
514 14979
572 17849

Proposed Rules:

10 ....15438, 16749
12 ....15438, 16749
13 16749
15 15438

47 CFR

Ch. I 14672
0 ....14499, 16229
1 ....15724, 18289
2 ....14500, 15382
15 14500
21 ....15387, 18092
61 15724
63 15724
64 14979
73 ....14503, 14676, 14981, 16878, 16879, 18289
76 ....15387, 15388, 16396, 18291
80 18226
87 18226
97 15382

Proposed Rules:

Ch. I 14717, 16432, 16890, 18811
0 16424
1 15439
2 ....15206, 18354
15 15206
20 15753
36 15208
64 15020
68 15441
69 15208
73 ....14733, 15022, 15439, 15442, 15443, 17864
74 ....15439, 17864
76 16447
80 18227
87 18227

48 CFR

207 16879
225 16880
231 16881
242 16881
252 16880
1425 15389
1452 15389
1516 14504
1523 14506
1535 14264
1552 ....14264, 14504, 14506
1604 15196
1652 15196

Proposed Rules:

9 14946
14 18480
15 ....14944, 18480
17 14944
31 14944
35 14946
37 14946
52 ....14944, 18480

49 CFR

3 17577
79 17578
382 14677
383 14677
390 14677
391 ....14677, 17253
392 14677
395 14677
533 14680
538 14507
541 15390
583 17253
800 14512
1154 16066

Proposed Rules:

37 ....16232, 16234
383 18355
393 ....14733, 18014
544 15443
571 ....15446, 15449, 15917, 16073
574 15917
1002 15208
1100 14735
1101 14735
1102 14735
1103 14735
1104 14735
1105 14735
1106 14735
1107 14735
1108 14735
1109 14735
1110 14735
1111 14735
1112 14735
1113 14735
1114 14735
1115 14735
1116 14735
1117 14735
1118 14735
1119 14735
1120 14735
1121 14735
1122 14735
1123 14735
1124 14735
1125 14735
1126 14735
1127 14735
1128 14735
1129 14735
1130 14735
1131 14735
1132 14735
1133 14735
1134 14735
1135 14735
1136 14735
1137 14735
1138 14735
1139 14735
1140 14735
1141 14735
1142 14735
1143 14735
1144 14735
1145 14735
1146 14735
1147 14735
1148 14735
1149 14735
1169 17579
1313 17682

50 CFR

216 15884
228 15884
251 14682
611 14465
620 16401
625 15199
641 14683
649 16882
650 15733
655 14465
663 ....14512, 16402
672 17256
675 ....16883, 17256, 17849

Proposed Rules:

17 15452
23 14543
100 15014
217 18102
227 18102
230 15754
285 18366

625.....17682
630 .....15212, 16236, 17866
646.....14735, 16076
650.....16237
651 .....14284, 16237, 16892
659.....17866
671.....16456
672.....16456, 18116
674.....16456
675.....16085, 16456
676.....14547, 18116
681.....15452
686.....16076

REMINDERS

The rules and proposed rules in this list were editorially compiled as an aid to Federal Register users. Inclusion or exclusion from this list has no legal significance.

RULES GOING INTO EFFECT TODAY

ENVIRONMENTAL PROTECTION AGENCY

Air pollution; standards of performance for new stationary sources:
- Metals emissions determination; published 4-25-96

Air quality implementation plans; approval and promulgation; various States:
- Ohio; published 4-25-96

Clean Air Act:
- State operating permits programs--
  - Tennessee; published 3-26-96

FEDERAL COMMUNICATIONS COMMISSION

Radio broadcasting:
- Broadcast license renewal procedures; published 4-25-96

HOUSING AND URBAN DEVELOPMENT DEPARTMENT

Board of Contract Appeals:
- Federal Acquisition Streamlining Act--
  - Monetary amount increase; published 3-26-96

Environmental criteria and standards:
- Federal regulatory review; published 3-26-96

Manufactured home procedural and enforcement regulations:
- Federal regulatory review
  - Correction; published 4-25-96

Public and Indian housing:
- Eviction; lease and grievance procedures; published 3-26-96

Real Estate Settlement Procedures Act:
- Unnecessary or illustrative regulations; streamlining; Federal regulatory review; published 3-26-96

JUSTICE DEPARTMENT

Prisons Bureau

Inmate control, custody, care, etc.:
- Medical services--
  - Plastic surgery; published 3-26-96

TRANSPORTATION DEPARTMENT

Coast Guard

List of penalty provisions Coast Guard is authorized to enforce; appendix removed; published 4-25-96

TRANSPORTATION DEPARTMENT

Federal Aviation Administration

Airworthiness directives:
- Bell; published 3-21-96
- Enstrom Helicopter Corp.; published 3-21-96
- Fokker; published 3-26-96

Class D airspace; published 2-9-96

Class D and Class E airspace; published 1-23-96

Class D and E airspace; published 2-15-96

Class E airspace; published 12-11-95

Class E airspace; correction; published 3-13-96

IFR altitudes; published 4-24-96

Jet routes; published 2-7-96

TREASURY DEPARTMENT

Bank Secrecy Act:
- Suspicious transactions; reporting requirement
  - Correction; published 4-25-96

COMMENTS DUE NEXT WEEK

AGRICULTURE DEPARTMENT

Operations Office

Acquisition regulations:
- Review and revision; comments due by 4-29-96; published 2-28-96

COMMERCE DEPARTMENT

International Trade Administration

Uruguay Round Agreements Act (URAA); conformance:
- Antidumping and countervailing duties; comments due by 4-29-96; published 2-27-96

COMMERCE DEPARTMENT

National Oceanic and Atmospheric Administration

Fishery conservation and management:
- Atlantic striped bass and weakfish; comments due by 4-29-96; published 3-28-96
- Atlantic swordfish; comments due by 5-2-96; published 4-12-96
- North Pacific fisheries research plan; implementation; comments due by 4-29-96; published 3-28-96

DEFENSE DEPARTMENT

Privacy Act; implementation; comments due by 4-30-96; published 3-1-96

EDUCATION DEPARTMENT

Postsecondary education:
- Foreign language and area studies fellowships program; comments due by 4-29-96; published 3-28-96
- Modern foreign language training and area studies, etc.; comments due by 4-29-96; published 3-28-96

ENVIRONMENTAL PROTECTION AGENCY

Air quality implementation plans; approval and promulgation; various States:
- California; comments due by 5-2-96; published 3-18-96
- Illinois; comments due by 5-2-96; published 4-2-96
- Indiana; comments due by 5-2-96; published 4-2-96
- Kentucky; comments due by 5-2-96; published 4-2-96
- Pennsylvania; comments due by 5-2-96; published 4-2-96
- Tennessee; comments due by 5-2-96; published 4-2-96

Air quality implementation plans; √A√approval and promulgation; various States; air quality planning purposes; designation of areas:
- Michigan; comments due by 5-2-96; published 4-2-96

Superfund program:
- National oil and hazardous substances contingency plan--
  - National priorities list update; comments due by 4-30-96; published 3-28-96
  - National priorities list update; comments due by 5-1-96; published 4-1-96

Water pollution control:
- Ocean dumping; bioassay testing requirements; comments due by 5-1-96; published 3-28-96

FEDERAL COMMUNICATIONS COMMISSION

Practice and procedure:
- Regulatory fees (FY 1996); assessment and collection; comments due by 4-29-96; published 4-15-96

Radio and television broadcasting:
- Equal employment opportunity rule and policies; revision; comments due by 4-30-96; published 3-12-96

Radio stations; table of assignments:
- Colorado; comments due by 5-2-96; published 3-18-96
- Illinois et al.; comments due by 4-29-96; published 3-13-96
- Louisiana; comments due by 5-2-96; published 3-18-96
- New York; comments due by 5-2-96; published 3-18-96
- Virgin Islands; comments due by 5-3-96; published 3-18-96
- Virginia; comments due by 4-29-96; published 3-13-96

Television stations; table of assignments:
- Oklahoma; comments due by 5-3-96; published 3-18-96
- Wisconsin; comments due by 4-29-96; published 3-13-96

FEDERAL TRADE COMMISSION

Lubricating oil, previously used; deceptive advertising and labeling; comments due by 5-3-96; published 4-3-96

Private vocational school guides; comments due by 5-3-96; published 4-3-96

HEALTH AND HUMAN SERVICES DEPARTMENT

Food and Drug Administration

Biological products:
- Well-characterized biotechnology products--
  - Approved application changes reporting; comments due by 4-29-96; published 1-29-96
  - Approved application changes reporting; guidance availability; comments due by 4-29-96; published 1-29-96
  - Approved application changes reporting; guidance availability; comments due by 4-29-96; published 1-29-96

Clinical investigators; financial disclosure; comments due by 4-29-96; published 3-5-96

Food for human consumption:

Federal regulatory review and comment request; comments due by 4-29-96; published 12-29-95

Food labeling--

Nutrient content claims; definition of term, healthy; comments due by 4-29-96; published 2-12-96

HOUSING AND URBAN DEVELOPMENT DEPARTMENT

Federal regulatory review:

Fair housing; certification and funding of State and local enforcement agencies; comments due by 4-29-96; published 2-28-96

INTERIOR DEPARTMENT

Fish and Wildlife Service

Federal regulatory review:

Wildlife and plants; lists consolidation; comments due by 5-3-96; published 3-19-96

Meetings:

Endangered Species of Wild Fauna and Flora International Trade Convention; comments due by 4-30-96; published 3-1-96

INTERIOR DEPARTMENT

Surface Mining Reclamation and Enforcement Office

Permanent program and abandoned mine land reclamation plan submissions:

Illinois; comments due by 4-29-96; published 3-29-96

Missouri; comments due by 5-2-96; published 4-2-96

LABOR DEPARTMENT

Occupational Safety and Health Administration

Occupational injury and illness; recording and reporting requirements; comments due by 5-2-96; published 2-2-96

Preliminary economic analysis; executive summary; comments due by 5-2-96; published 2-29-96

TRANSPORTATION DEPARTMENT

Coast Guard

Regattas and marine parades:

World's Fastest Lobster Boat Race; comments due by 5-3-96; published 3-4-96

TRANSPORTATION DEPARTMENT

Federal Aviation Administration

Airworthiness directives:

AlliedSignal Inc.; comments due by 4-29-96; published 2-29-96

Michelin Aircraft Tire Corp.; comments due by 4-30-96; published 1-29-96

Class E airspace; comments due by 4-29-96; published 3-18-96

TRANSPORTATION DEPARTMENT

Surface Transportation Board

Rail licensing procedures:

Abandonment and discontinuance of rail lines and rail transportation; comments due by 5-3-96; published 3-19-96

TREASURY DEPARTMENT

Customs Service

Organization and functions; field organization, ports of entry, etc.:

Columbus, OH; port limits extension; comments due by 4-30-96; published 3-1-96

TREASURY DEPARTMENT

Fiscal Service

Bonds and notes, U.S. Treasury:

Payments by banks and other financial institutions of United States savings bonds and notes (Freedom Shares); comments due by 5-1-96; published 4-1-96

Book-entry Treasury bonds, notes, and bills:

Securities held through financial intermediaries; comments due by 5-3-96; published 3-4-96

VETERANS AFFAIRS DEPARTMENT

Loan guaranty:

Discount points financed in connection with interest rate reduction refinancing loans; limitation; comments due by 4-29-96; published 2-28-96