8–29–95
Vol. 60 No. 167
Pages 44727–45040

federal register

Tuesday
August 29, 1995

Briefings on How To Use the Federal Register
For information on briefings in Washington, DC and Atlanta, GA, see announcement on the inside cover of this issue.

FEDERAL REGISTER Published daily, Monday through Friday, (not published on Saturdays, Sundays, or on official holidays), by the Office of the Federal Register, National Archives and Records Administration, Washington, DC 20408, under the Federal Register Act (49 Stat. 500, as amended; 44 U.S.C. Ch. 15) and the regulations of the Administrative Committee of the Federal Register (1 CFR Ch. I). Distribution is made only by the Superintendent of Documents, U.S. Government Printing Office, Washington, DC 20402.

The **Federal Register** provides a uniform system for making available to the public regulations and legal notices issued by Federal agencies. These include Presidential proclamations and Executive Orders and Federal agency documents having general applicability and legal effect, documents required to be published by act of Congress and other Federal agency documents of public interest. Documents are on file for public inspection in the Office of the Federal Register the day before they are published, unless earlier filing is requested by the issuing agency.

The seal of the National Archives and Records Administration authenticates this issue of the **Federal Register** as the official serial publication established under the Federal Register Act. 44 U.S.C. 1507 provides that the contents of the **Federal Register** shall be judicially noticed.

The **Federal Register** is published in paper, 24x microfiche and as an online database through *GPO Access*, a service of the U.S. Government Printing Office. The online database is updated by 6 a.m. each day the **Federal Register** is published. The database includes both text and graphics from Volume 59, Number 1 (January 2, 1994) forward. It is available on a Wide Area Information Server (WAIS) through the Internet and via asynchronous dial-in. The annual subscription fee for a single workstation is $375. Six-month subscriptions are available for $200 and one month of access can be purchased for $35. Discounts are available for multiple-workstation subscriptions. To subscribe, Internet users should telnet to swais.access.gpo.gov and login as newuser (all lower case); no password is required. Dial-in users should use communications software and modem to call (202) 512–1661 and login as swais (all lower case); no password is required; at the second login prompt, login as newuser (all lower case); no password is required. Follow the instructions on the screen to register for a subscription for the **Federal Register** Online via *GPO Access.* For assistance, contact the *GPO Access* User Support Team by sending Internet e-mail to help@eids05.eids.gpo.gov, or a fax to (202) 512–1262, or by calling (202) 512–1530 between 7 a.m. and 5 p.m. Eastern time, Monday through Friday, except Federal holidays.

The annual subscription price for the **Federal Register** paper edition is $494, or $544 for a combined **Federal Register**, Federal Register Index and List of CFR Sections Affected (LSA) subscription; the microfiche edition of the **Federal Register** including the Federal Register Index and LSA is $433. Six month subscriptions are available for one-half the annual rate. The charge for individual copies in paper form is $8.00 for each issue, or $8.00 for each group of pages as actually bound; or $1.50 for each issue in microfiche form. All prices include regular domestic postage and handling. International customers please add 25% for foreign handling. Remit check or money order, made payable to the Superintendent of Documents, or charge to your GPO Deposit Account, VISA or MasterCard. Mail to: New Orders, Superintendent of Documents, P.O. Box 371954, Pittsburgh, PA 15250–7954.

There are no restrictions on the republication of material appearing in the **Federal Register.**

How To Cite This Publication: Use the volume number and the page number. Example: 60 FR 12345.

SUBSCRIPTIONS AND COPIES

PUBLIC

Subscriptions:

Paper or fiche	**202–512–1800**
Assistance with public subscriptions	**512–1806**

Online:

Telnet swais.access.gpo.gov, login as newuser <enter>, no password <enter>; or use a modem to call (202) 512–1661, login as swais, no password <enter>, at the second login as newuser <enter>, no password <enter>.

Assistance with online subscriptions	**202–512–1530**

Single copies/back copies:

Paper or fiche	**512–1800**
Assistance with public single copies	**512–1803**

FEDERAL AGENCIES

Subscriptions:

Paper or fiche	**523–5243**
Assistance with Federal agency subscriptions	**523–5243**

For other telephone numbers, see the Reader Aids section at the end of this issue.

THE FEDERAL REGISTER

WHAT IT IS AND HOW TO USE IT

FOR: Any person who uses the Federal Register and Code of Federal Regulations.

WHO: The Office of the Federal Register.

WHAT: Free public briefings (approximately 3 hours) to present:

1. The regulatory process, with a focus on the Federal Register system and the public's role in the development of regulations.
2. The relationship between the Federal Register and Code of Federal Regulations.
3. The important elements of typical Federal Register documents.
4. An introduction to the finding aids of the FR/CFR system.

WHY: To provide the public with access to information necessary to research Federal agency regulations which directly affect them. There will be no discussion of specific agency regulations.

WASHINGTON, DC

WHEN: September 12 at 9:00 am

WHERE: Office of the Federal Register Conference Room, 800 North Capitol Street NW., Washington, DC (3 blocks north of Union Station Metro)

RESERVATIONS: 202–523–4538

ATLANTA, GA

WHEN: September 20 at 9:00 am

WHERE: Centers for Disease Control and Prevention
1600 Clifton Rd., NE.
Auditorium A
Atlanta, GA

RESERVATIONS: 404–639–3528 (Atlanta area)
1–800–688–9889 (Outside Atlanta area)

Printed on recycled paper containing 100% post consumer waste

Contents

Federal Register

Vol. 60, No. 167

Tuesday, August 29, 1995

Agency for Toxic Substances and Disease Registry
NOTICES
Meetings:
Psychological effects of hazardous substances; workshop, 44894

Agriculture Department
See Animal and Plant Health Inspection Service
See Forest Service
See Rural Utilities Service
NOTICES
Agency information collection activities under OMB review, 44833

Animal and Plant Health Inspection Service
PROPOSED RULES
Exportation and importation of animals and animal products:
Swine vesicular disease; disease status change—Germany, 44785–44786

Antitrust Division
NOTICES
Competitive impact statements and proposed consent judgments:
FTD Corp. et al.; correction, 44902–44903

Army Department
See Engineers Corps
NOTICES
Patent licenses; non-exclusive, exclusive, or partially exclusive:
Protective peptides of neurotoxin of C. Botulinum, 44860

Centers for Disease Control and Prevention
NOTICES
Grants and cooperative agreements; availability, etc.:
Injury control research centers, 44894–44897
Meetings:
Diabetes Translation and Community Control Programs Technical Advisory Committee, 44897

Children and Families Administration
NOTICES
Agency information collection activities under OMB review, 44893

Coast Guard
RULES
Pollution:
Gulf of Mexico; lightering zones, 45006–45018

Commerce Department
See International Trade Administration
See National Institute of Standards and Technology
See National Oceanic and Atmospheric Administration
NOTICES
Agency information collection activities under OMB review, 44833–44835

Committee for the Implementation of Textile Agreements
NOTICES
Cotton, wool, and man-made textiles:
Guatemala, 44857
Kuwait, 44857–44858

Defense Department
See Army Department
See Engineers Corps
See Navy Department
NOTICES
Agency information collection activities under OMB review, 44858, 44859
Meetings:
National Security Education Board advisors, 44858
Senior Executive Service:
Performance Review Board; membership, 44858–44859

Employment Standards Administration
NOTICES
Agency information collection activities under OMB review:
Proposed agency information collection activities; comment request, 44903

Energy Department
See Federal Energy Regulatory Commission
NOTICES
Meetings:
Environmental Management Advisory Board, 44861–44862

Engineers Corps
RULES
Anchors, cables, and chains for floating and semisubmersible drilling rigs; placement within shipping safety fairways; permits, 44760–44762
NOTICES
Environmental statements; availability, etc.:
Upper Des Plaines River, IL; flood damage control, 44859–44860

Environmental Protection Agency
RULES
Air quality implementation plans:
Preparation, adoption, and submittal—
Nitrogen oxides waivers; transportation authority, 44762–44763
PROPOSED RULES
Air quality implementation plans:
Transportation plans, programs, and projects; Federal or State implementation plan conformity; miscellaneous revisions, 44790–44799
Clean Air Act:
State operating permits programs—
North Carolina, 44805–44812
West Virginia, 44799–44805
NOTICES
Agency information collection activities under OMB review:
Proposed agency information collection activities; comment request, 44875–44877

Meetings:
Common Sense Initiative—
Iron and steel sector, 44877–44878
Water and wastewater projects; alternative funding approaches, 44878

Executive Office of the President
See Management and Budget Office
See Presidential Documents

Federal Aviation Administration
RULES
Airworthiness standards:
Special conditions—
Gulfstream model Gulfstream V airplane; high-intenity radiated fields, 44748–44749
PROPOSED RULES
Airworthiness standards:
Transport category airplanes—
Structural loads requirements, 44998–45003
NOTICES
Advisory circulars; availability, etc.:
Transport category airplanes—
Design dive speed, 45004
Passenger facility charges; applications, etc.:
Springfield-Branson Regional Airport, MO, 44929–44930

Federal Communications Commission
RULES
Television broadcasting:
Prime time access rule; repeal, 44773–44780
PROPOSED RULES
Radio stations; table of assignments:
North Carolina, 44820–44821
NOTICES
Agency information collection activities under OMB review:
Proposed agency information collection activities; comment request, 44878–44880
Rulemaking proceedings; petitions filed, granted, denied, etc., 44880

Federal Emergency Management Agency
RULES
Flood elevation determinations:
Arizona et al., 44765–44769
Kansas et al., 44769–44773
PROPOSED RULES
Flood elevation determinations:
Arkansas et al., 44812–44820
NOTICES
Disaster and emergency areas:
Florida, 44880
Minnesota, 44880–44881
Flood insurance program:
Mortgage portfolio protection program, 44881–44890
Hotel and Motel Fire Safety Act; national master list, 45034–45035

Federal Energy Regulatory Commission
NOTICES
Electric rate and corporate regulation filings:
AES Power, Inc., et al., 44865–44868
Los Amigos Leasing Co., Ltd., et al., 44868–44872
Hydroelectric applications, 44872–44875
Applications, hearings, determinations, etc.:
Equitrans, Inc., 44862
Natural Gas Pipeline Co. of America, 44862–44863
Olympic Pipeline Co., 44863
Sonat Power Marketing Inc., 44863–44864
Stalwart Power Co., 44864
Tennessee Gas Pipeline Co., 44864
Thunder Bay Power Co., 44864–44865

Federal Reserve System
NOTICES
Meetings; Sunshine Act, 44934
Applications, hearings, determinations, etc.:
Luehrman, Walter W., et al., 44890–44891
NationsBank Corp. et al., 44891
Norwest Corp., 44891–44892
SunTrust Banks, Inc., 44892–44893

Financial Management Service
See Fiscal Service

Fiscal Service
NOTICES
Surety companies acceptable on Federal bonds:
Century American Casualty Co., 44932

Fish and Wildlife Service
RULES
Migratory bird hunting:
Early-season regulations (1995-96); final frameworks, 45020–45031
NOTICES
Endangered and threatened species:
Recovery plans—
Yellow shouldered blackbird, 44899

Food and Drug Administration
RULES
Food additives:
Adjuvants; production aids, and sanitizers—
N,N-bis(2-ethylhexyl)-ar-methyl-1H-benzotriazole-1-methanamine, 44757–44758
Paper and paperboard components—
Ammonium zirconium lactate-citrate complexes, 44756–44757
Food for human consumption:
Sucrose fatty acit esters, 44755–44756
PROPOSED RULES
Food for human consumption:
Food labeling—
Sugar alcohols and dental caries; health claims; correction, 44786–44787
Human drugs:
Cold, cough, allergy, bronchodilator, and antiasthmatic products (OTC)—
Ephedrine, ephedrine hydrochloride, ephedrine sulfate, and racephedrine hydrochloride-containing bronchodilator products; monograph amendment, 44787–44788
NOTICES
Human drugs:
Export applications—
Atenolol bulk drug substance, 44897–44898

Foreign Assets Control Office
NOTICES
Middle East peace process; specially designated terrorists who threaten to disrupt; list availability, 44932–44933

Forest Service
NOTICES
Environmental statements; availability, etc.:
Umatilla National Forest, OR, 44833

Health and Human Services Department
See Agency for Toxic Substances and Disease Registry
See Centers for Disease Control and Prevention
See Children and Families Administration
See Food and Drug Administration

Interior Department
See Fish and Wildlife Service
See Land Management Bureau
See National Park Service

Internal Revenue Service
RULES
Excise taxes:
Deposit procedures, 44758–44760
PROPOSED RULES
Excise taxes:
Deposit procedures; cross-reference, 44788

International Trade Administration
NOTICES
Antidumping:
Chrome-plated lug nuts from—
Taiwan, 44835–44839
Countervailing duties:
Iron-metal castings from—
India, 44839–44855

Justice Department
See Antitrust Division
PROPOSED RULES
Privacy Act:
Implementation, 44788–44790
NOTICES
Agency information collection activities under OMB review, 44900–44901
Privacy Act:
Systems of records, 44901–44902

Labor Department
See Employment Standards Administration
See Mine Safety and Health Administration
See Pension and Welfare Benefits Administration

Land Management Bureau
RULES
Public land orders:
Colorado, 44763–44764
Wyoming, 44764–44765
NOTICES
Environmental statements; availability, etc.:
Castle Mountain Mine, CA, 44898
Oil and gas leases:
New Mexico, 44898
Realty actions; sales, leases, etc.:
Arizona, 44898–44899

Management and Budget Office
RULES
Reporting and recordkeeping requirements, 44978–44996

Mine Safety and Health Administration
NOTICES
Meetings:
Miners' Exposure to Diesel Particulate; workshop, 44903–44904

National Aeronautics and Space Administration
NOTICES
Meetings:
Life and Microgravity Sciences and Applications Advisory Committee, 44906

National Institute of Standards and Technology
RULES
Advanced technology program procedures:
Manufacturing extension partnership; infrastructure development projects, 44750–44755

National Oceanic and Atmospheric Administration
RULES
Endangered and threatened species:
Sea turtle conservation; shrimp trawling requirements—
Additional turtle excluder device requirements within statistical zones, 44780–44784
PROPOSED RULES
Fishery conservation and management:
Atlantic swordfish and shark, 44824–44825
Gulf of Mexico reef fish, 44825–44832
NOTICES
Endangered and threatened species:
Snake River sockeye salmon
Proposed recovery plan availability, 44855–44856
Meetings:
Gulf of Mexico Fishery Management Council, 44856
Mid-Atlantic Fishery Management Council, 44856–44857

National Park Service
NOTICES
National Register of Historic Places:
Pending nominations, 44899–44900

National Science Foundation
NOTICES
Meetings:
Design, Manufacture, and Industrial Innovation Special Emphasis Panel, 44906

National Transportation Safety Board
NOTICES
Meetings; Sunshine Act, 44934

Navy Department
NOTICES
Inventions, Government-owned; availability for licensing, 44860
Patent licenses; non-exclusive, exclusive, or partially exclusive:
Benthos, Inc., 44860
Senior Executive Service:
Performance Review Boards; membership, 44860–44861

Nuclear Regulatory Commission
NOTICES
Meetings; Sunshine Act, 44934
Applications, hearings, determinations, etc.:
Georgia Power Co., et al., 44906–44907

Office of Management and Budget
See Management and Budget Office

Pension and Welfare Benefits Administration
NOTICES
Employee benefit plans; prohibited transaction exemptions:
United Jewish Appeal-Federation of Jewish Philanthropies of New York, Inc., et al., 44904–44906

Pension Benefit Guaranty Corporation
NOTICES
Agency information collection activities under OMB review, 44908

Personnel Management Office
NOTICES
Excepted service:
Schedules A, B, and C; positions placed or revoked—Update, 44907–44908

Postal Service
NOTICES
Domestic Mail Manual:
Ownership, management, and circulation statement (PS Form 3526); revision, 44908–44909
National business partners' program; seminars, 44909

Presidential Documents
ADMINISTRATIVE ORDERS
Government agencies and employees:
State, local, and tribal governments, consultation guidelines, delegation of authority to Director of Office of Management and Budget, 45039

Public Health Service
See Agency for Toxic Substances and Disease Registry
See Centers for Disease Control and Prevention
See Food and Drug Administration

Research and Special Programs Administration
PROPOSED RULES
Pipeline safety:
Hazardous liquid transportation—
Areas unusually sensitive to environmental damage; workshop, 44824
Emergency flow restricting devices/leak detection equipment; workshop, 44822–44823
Inspection requirements, increased; workshop, 44821–44822
NOTICES
Pipeline safety; waiver petitions:
Alyeska Pipeline Service Co., 44930–44932

Rural Utilities Service
RULES
Telecommunications standards and specifications:
Materials, equipment, and construction—
Line concentrators; performance specification, 44727–44748

Securities and Exchange Commission
NOTICES
Agency information collection activities under OMB review, 44909
Self-regulatory organizations; proposed rule changes:
American Stock Exchange, Inc., 44917–44921
Chicago Board Options Exchange, Inc., 44921–44923
Options Clearing Corp., 44926–44927
Philadelphia Stock Exchange, Inc., 44923–44926, 44927–44928
Applications, hearings, determinations, etc.:
Consulting Group Capital Markets Funds & Smith Barney Mutual Funds Management Inc., 44909–44913
Franklin Pennsylvania Investors Fund, 44913
Healthy Planet Products, Inc., 44913–44914
Metropolitan Life Insurance Co. et al., 44914–44917
Sterling Healthcare Group, Inc., 44917

Small Business Administration
NOTICES
Applications, hearings, determinations, etc.:
Bay Partners SBIC, L.P., 44928–44929
Geneva Middle Market Investors, L.P., 44929

State Justice Institute
NOTICES
Grants, cooperative agreements, and contracts; guidelines, 44936–44975

Textile Agreements Implementation Committee
See Committee for the Implementation of Textile Agreements

Toxic Substances and Disease Registry Agency
See Agency for Toxic Substances and Disease Registry

Transportation Department
See Coast Guard
See Federal Aviation Administration
See Research and Special Programs Administration

Treasury Department
See Fiscal Service
See Foreign Assets Control Office
See Internal Revenue Service

Separate Parts In This Issue

Part II
State Justice Institute, 44936–44975

Part III
Office of Management and Budget, 44978–44996

Part IV
Department of Transportation, Federal Aviation Administration, 44998–45004

Part V
Department of Transportation, Coast Guard, 45006–45018

Part VI
Department of the Interior, Fish and Wildlife Service, 45020–45031

Part VII
Federal Emergency Management Agency, 45034–45035

Part VIII
The President, 45039

Reader Aids
Additional information, including a list of public laws, telephone numbers, and finding aids, appears in the Reader Aids section at the end of this issue.

Electronic Bulletin Board

Free **Electronic Bulletin Board** service for Public Law numbers, **Federal Register** finding aids, and a list of documents on public inspection is available on 202–275–1538 or 275–0920.

CFR PARTS AFFECTED IN THIS ISSUE

A cumulative list of the parts affected this month can be found in the Reader Aids section at the end of this issue.

3 CFR
Administrative Orders:
Memorandum:
August 25, 1995 45039

5 CFR
1320.....44978

7 CFR
1755.....44727

9 CFR
Proposed Rules:
94.....44785

14 CFR
25.....44748
Proposed Rules:
25.....44998

15 CFR
292.....44750

21 CFR
172.....44755
176.....44756
178.....44757
Proposed Rules:
101.....44786
310.....44787
341.....44787

26 CFR
40.....44758
Proposed Rules:
40.....44788

28 CFR
Proposed Rules:
16.....44788

33 CFR
156.....45006
322.....44760

40 CFR
51.....44762
93.....44762
Proposed Rules:
51.....44790
70 (2 documents) 44799, 44805
93.....44790

43 CFR
Public Land Orders:
7155.....44763
7156.....44763
7158.....44764

44 CFR
65 (2 documents) 44765, 44767
67.....44769
Proposed Rules:
67.....44812

47 CFR
73.....44773
Proposed Rules:
73.....44820

49 CFR
Proposed Rules:
192.....44821
195 (3 documents) 44821, 44822, 44824

50 CFR
20.....45020
217.....44780
227.....44780
Proposed Rules:
630.....44824
641.....44825
678.....44824

Rules and Regulations

Federal Register
Vol. 60, No. 167
Tuesday, August 29, 1995

This section of the FEDERAL REGISTER contains regulatory documents having general applicability and legal effect, most of which are keyed to and codified in the Code of Federal Regulations, which is published under 50 titles pursuant to 44 U.S.C. 1510.

The Code of Federal Regulations is sold by the Superintendent of Documents. Prices of new books are listed in the first FEDERAL REGISTER issue of each week.

DEPARTMENT OF AGRICULTURE

Rural Utilities Service

7 CFR Part 1755

RUS Performance Specification for Line Concentrators

AGENCY: Rural Utilities Service, USDA.

ACTION: Final rule.

SUMMARY: The Rural Utilities Service formerly the Rural Electrification Administration (RUS) hereby amends its regulation on RUS Telecommunications Standards and Specifications for Material, Equipment and Construction by codifying the RUS bulletin concerning RUS Performance Specification for Line Concentrators, RUS form 397g. This specification has been incorporated by reference and will be rescinded after the effective date of the final rule. The specification updates the end product performance requirements brought about through technology advancements since this specification was last issued on July 29, 1985.

DATES: *Effective date.* This regulation is effective on September 28, 1995.

Incorporation by reference. Incorporation by reference of publications listed in this final rule is approved by the Director of the Federal Register as of September 28, 1995.

FOR FURTHER INFORMATION CONTACT: Mr. John J. Schell, Chief, Central Office Equipment Branch, Telecommunications Standards Division, U.S. Department of Agriculture, Rural Utilities Service, room 2838–S, AG Box 1598, Washington, DC 20250–1500. Telephone: 202–720–0671.

SUPPLEMENTARY INFORMATION:

Executive Order 12866

This rule has been determined to be not significant for purposes of Executive Order 12866 and therefore has not been reviewed by OMB.

Executive Order 12778

This rule has been reviewed under Executive Order 12778, Civil Justice Reform. This rule:

(1) Will not preempt any state or local laws, regulations, or policies, unless they present an irreconcilable conflict with this rule;

(2) Will not have any retroactive effect; and

(3) Will not require administrative proceedings before any parties may file suit challenging the provisions of this rule.

Regulatory Flexibility Act Certification

RUS has determined that this rule will not have a significant economic impact on a substantial number of small entities, as defined by the Regulatory Flexibility Act (5 U.S.C. 601 et seq.) the RUS programs provide and finance grants and loans to RUS borrowers at interest rates and terms that are more favorable than those generally available from the private sector. RUS borrowers, as a result of obtaining Federal financing, receive economic benefits which ultimately offset any direct economic costs associated with complying with RUS regulations and requirements.

Information Collection and Recordkeeping Requirements

In compliance with the Office of Management and Budget (OMB) regulations (5 CFR Part 1320) which implements the Paperwork Reduction Act of 1980 (44 U.S.C. 3501 et seq.) and section 3504 of that Act, information collection and recordkeeping requirements contained in this rule have been approved by OMB under control number 0572–0059. Comments concerning these requirements should be directed to the Office of Information and Regulatory Affairs of OMB, Attention: Desk Officer for USDA, Room 10102, NEOB, Washington, DC 20503.

National Environmental Policy Act Certification

The Administrator has determined that this rule will not significantly affect the quality of the human environment as defined by the National Environmental Policy Act of 1969 (42 U.S.C. 4321 et seq.). Therefore, this action does not require an environmental impact statement or assessment.

Catalog of Federal Domestic Assistance

The program described by this rule is listed in the Catalog of Federal Domestic Assistance Programs under number 10.851, Rural Telephone Loans and Loan Guarantees. This catalog is available on a subscription basis from the Superintendent of Documents, the United States Government Printing Office, Washington, DC 20402.

Executive Order 12372

This rule is excluded from the scope of Executive Order 12372, Intergovernmental Consultation. A Notice of Final Rule entitled Department Programs and Activities Excluded from Executive Order 12372 (50 FR 47034) exempts RUS and RTB loans and loan guarantees, and RTB bank loans, to governmental and nongovernmental entities from coverage under this Order.

Background

RUS makes loans and loan guarantees to telephone system to provide and improve telecommunications service in rural areas, as authorized by the Rural Electrification Act of 1936, as amended, 7 U.S.C. 901 *et seq.*, (RE Act). RUS maintains a system of construction standards and specifications for materials and equipment. In accordance with the RUS loan contract, these standards and specifications apply to facilities constructed by RUS telephone borrowers.

Presently, RUS Bulletin 345–185, RUS Performance Specification for Line Concentrators RUS Form 397g, dated July 29, 1985, is incorporated by reference at 7 CFR 1755.97. Because of the many improvements in technology since the specification was last issued, RUS believes that by updating and codifying the revised specification, borrowers will be provided with an opportunity to improve and increase subscriber services through enhanced system designs brought about through the technological advancements in an economical and efficient manner.

General Comments

Public comments regarding the proposed rule (59 FR 19661, April 25, 1994) were received from AT&T and Hastad Engineering Company. These

comments were taken into consideration in preparing the final rule.

1. Comment. One commenter stated that the first sentence in paragraph (a)(iii) should be modified to read ''* * * without loss of individual identity by either physical or electronic means.''

Response. The intent of this requirement is to ensure that the identities of the lines connected to the remote line concentrator terminal are known at the central office. RUS feels this paragraph is a clear statement of this requirement.

2. Comment. One commenter stated that ''at a minimum'' should be added following ''The concentrator system shall communicate with the standard T1 transmission format'' in paragraph (b)(2).

Response. RUS agrees and this change has been made.

3. Comment. One commenter stated in the phrase ''0.5 percent per month of all equipped cards in all system terminals after 6 months'' in paragraph (c)(1) ''system'' should be changed to ''systems.''

Response. In this context, the word ''system'' refers to the line concentrator system. The reliability requirement is meant to be applicable to each concentrator system individually.

4. Comment. One commenter stated that RUS should consider specifying a sine wave output for ringing generators in paragraph (f)(3)(ii).

Response. A sine wave output is one of the requirements for the acceptance of ringing generators by RUS. RUS does not feel that it is necessary to reiterate this requirement in the line concentrator specification.

5. Comment. One commenter stated that consideration should be given to providing an upper limit for loop current in paragraph (h)(2).

Response. The minimum current requirement ensures proper operation of the subscriber's station equipment. The maximum current is largely dependent upon the design of the line concentrator's line circuit. This specification is intended to be an operational rather than a design specification and RUS does not feel that a maximum current requirement is necessary in that light.

6. Comment. One commenter stated that the impedance of 900 ohms in paragraph (h)(3) is for D66 loaded cables, not non-loaded cable pairs.

Response. From a hybrid balance standpoint, 900 ohms in series with a 2.16 microfarad capacitor is not a very good match for either loaded or non-loaded loops. For this reason most switching equipment uses hybrid termination networks more closely matching the characteristic impedances of the loops. However, as a compromise the 900 ohm termination was used in determining transmission requirements stated in paragraph (h)(3).

7. Comment. One commenter stated the requirement for a central office repeater and a DS1 bit stream may be a roadblock to the technical innovation. The STMP requirements for high bit rate services may not be supported by the low bit rate in paragraph (h)(20)(iv)(A).

Response. RUS agrees and has removed the repeater requirement and made the DS1 rate a minimum.

8. Comment. One commenter suggested two additions in paragraph (j)(1)(iii)(A): (1) Require testing of equipment with 100 Hz impedances beyond the 50 ohm maximum RUS has proposed, to a new maximum of 100 ohms, and (2) reduce the current surge test peak to 100 A from the required 500 A but require 25 plus and minus surges instead of the plus and minus five surges that RUS proposed.

Response. RUS evaluated the proposal by estimating the relative overall power that would be dissipated by the 100 Hz paths under the RUS proposal and the commenter's proposal.

Because this proposal requires additional testing of 100 Hz impedance paths beyond the 50 ohms and because the proposer's method of testing for overall and single surge power dissipation is less demanding on paths less than 5 and 10 ohms and more demanding for impedance paths greater than 5 and 10 ohms, respectively, RUS prefers to retain the requirement as RUS proposed it.

9. Comment. One commenter proposed in paragraph (j)(1)(iii)(B) that for 100 ohm, 60 Hz, impedance paths, using a 600 volt power supply and 86 ohm current limiting resistors (rather than the required 700 volt power supply and 100 ohm current limiting resistors) would result in approximately the same amount of current flow.

Response. Although not stated, RUS assumes that the commenter is suggesting the requirement be changed to allow the different power supply voltage and current limiting resistors. In evaluating the circuit testing differences, RUS calculated that the commenter's proposal would result in 4.2 amps of current while the RUS proposal would cause 4.7 amps. Thus, the commenter's proposal results in a 0.5 amp less current. Although 0.5 amp is not a major reduction (5 percent relative to the 10 amp maximum specified in the RUS proposal), it nevertheless is a 5-percent reduction.

The commenter's suggested power supply voltage is also 100 volts lower than the RUS specified supply and it will not provide the same voltage stress that is contained in the RUS proposal.

RUS believes the Sixty Hertz Current Carrying test as proposed by RUS is necessary to properly test the system.

10. Comment. One commenter proposed in paragraphs (j)(1)(iii) (D) and (E) that the Voltage Impulse Test be modified to allow use of another waveshape (both peak and rise and fall times) and that for both the Voltage Impulse Test and the Arrester Response Delay Test that RUS allow results obtained by other organizations as part of their compliance testing to be acceptable for RUS compliance.

Response. RUS always attempts to accept test results conducted for other purposes as supporting data for RUS requirements when the data presented is equivalent or more stringent than RUS requirements.

All five tests are required to be conducted in a specific sequence and as quickly as possible; the endeavor is to inflict all stresses, one after another, in a very short time period for the total testing.

Testing conducted for other organizations, most likely, will not satisfy the concerns intended for the RUS electrical protection tests. In addition to not using the RUS specified waveshapes, tests by other organizations usually do not involve all the individual tests in the sequence required nor are they completed at the same time in the quick time frame required by RUS; results of various types of testing often may not be for tests conducted on the exact same test samples. In a number of cases, certain tests by other organizations are expected to destroy the product to be certain there is no fire or shock hazard. Although RUS is certainly interested in knowing of such hazards, the purpose of the RUS electrical protection testing is to see whether the line concentrator can withstand the specified surges and operate without any difficulty following the testing. Since test samples are destroyed by these other types of tests, such product evaluations cannot be made.

Because the test results suggested by the commenter are usually completed piecemeal and do not provide the overall rigorous test withstand concerns that RUS seeks, RUS cannot accept this suggestion to allow alternative waveshapes and prefers to retain the waveshape proposed in the proposed rule.

11. Comment. One commenter stated that RUS should provide a standard

requirement for 120/240 volts AC in paragraphs (q)(2)(vii) and (l)(2)(iii).

Response. RUS agrees and has made this change in paragraphs (q)(2)(vii) and (l)(2)(iii).

12. Comment. One commenter stated that battery heaters as specified in (l)(3)(iv) should not be a required item as determined by the bidder, but should be available as an option for the purchaser to accept or reject.

Response. RUS agrees and has changed this paragraph to read ''when specified by the owner.''

13. Comment. One commenter stated that since line concentrators are often installed by the purchaser, the bidder cannot provide job drawings as required in paragraph (p)(2)(iv). The commenter also stated that a minimum of three sets of drawings should be supplied for each central office involved rather than for each concentrator.

Response. RUS has added an additional requirement in (p)(2)(v) when installation is to be done by the bidder. This requirement states that a complete set of drawings shall be provided, such as floor plans, AC power access and grounding parameters. RUS has also stated that three sets of drawings are required per central office rather than per concentrator.

14. Comment. One commenter stated that an appropriate secondary arrestor should be provided in the remote terminal cabinet.

Response. Paragraph (q)(2)(vii) requires that a secondary arrester be provided.

15. Comment. One commenter stated the specification should include a requirement for a remote cabinet ground lug, either on the cabinet's outside or mounted in the interior.

Response. Paragraph (q)(2)(ix) has been changed to include ground lugs.

List of Subjects in 7 CFR Part 1755

Incorporation by reference, Loan programs—communications, Reporting and recordkeeping requirements, Rural areas, Telephone.

For the reasons set out in the preamble, RUS amends chapter XVII of title 7 of the Code of Federal Regulations as set forth below.

PART 1755—TELECOMMUNICATIONS STANDARDS AND SPECIFICATIONS FOR MATERIALS, EQUIPMENT AND CONSTRUCTION

1. The authority citation for part 1755 is revised to read as follows:

Authority: 7 U.S.C. 901 *et seq.,* 1921 *et seq.,* 6941 *et seq.*

§ 1755.97 [Amended]

2. Section 1755.97 is amended by removing the entry RUS Bulletin 345–185 from the table.

3. Section 1755.397 is revised to read as follows:

§ 1755.397 RUS performance specification for line concentrators.

(a) *General.* (1) This section covers general requirements for a line concentrator (LC) system. This system shall operate in accordance with the manufacturer's specifications. Reliability shall be of prime importance in the design, manufacture and installation of the equipment. The equipment shall automatically provide for:

(i) Terminating subscriber lines at a location remote from the serving central office;

(ii) Concentrating the subscriber lines over a few transmission and supervisory paths to the serving central office; and

(iii) Terminating the lines at the central office without loss of individual identity. A subscriber connected to a line concentrator shall be capable of having essentially the same services as a subscriber connected directly to the central office equipment (COE). Intra-unit calling among subscribers connected to the concentrator may be provided, but is not required.

(2) Industry standards, or portions thereof, referred to in this paragraph (a) are incorporated by reference by RUS. This incorporation by reference was approved by the Director of the Federal Register in accordance with 5 U.S.C. 552 (a) and 1 CFR part 51. Copies of these standards are available for inspection during normal business hours at RUS, room 2838, U.S. Department of Agriculture, Washington, DC 20250 or at the Office of the Federal Register, 800 North Capitol Street, NW., suite 700, Washington, DC.

(3) American National Standards Institute (ANSI) standards are available from ANSI Inc., 11 West 42nd Street, 13th floor, New York, NY 10036, telephone 212–642–4900.

(i) ANSI Standard S1.4–1983, Specification for Sound Level Meters, including Amendment S1.4A–1985.

(ii) [Reserved]

(4) American Society for Testing Materials (ASTM) are available from 1916 Race Street, Philadelphia, PA 19103, telephone 215–299–5400.

(i) ASTM Specification B33–91, Standard Specifications for Tinned Soft or Annealed Copper Wire for Electrical Purposes.

(ii) [Reserved]

(5) Bell Communications Research (Bellcore) standards are available from Bellcore Customer Service, 8 Corporate Place, Piscataway, NJ 08854, telephone 1–800–521–2673.

(i) TR–TSY–000008, Issue 2, August 1987, Digital Interface between the SLC 96 Digital Loop Carrier System and a Local Digital Switch.

(ii) Bell Communications Research (Bellcore) document TR–TSY–000057, Issue 1, April 1987, including Revision 1, November 1988, Functional Criteria for Digital Loop Carrier Systems.

(iii) Bell Communications Research (Bellcore) Document TR–NWT–000303, Issue 2, December 1992, including Revision 1, December 1993, Integrated Digital Loop Carrier System Generic Requirements, Objectives, and Interface.

(6) Federal Standard H28, Screw-Thread Standards for Federal Services, March 31, 1978, including Change Notice 1, May 28, 1986; Change Notice 2, January 20, 1989; and Change Notice 3, March 12, 1990. Copies may be obtained from the General Services Administration, Specification Section, 490 East L'Enfant Plaza SW, Washington, DC 20407, telephone 202–755–0325.

(7) IEEE standards are available from IEEE Service Center, 445 Hoes Lane, P.O. Box 1331, Piscataway, NJ 08854, telephone 1–800–521–2673.

(i) IEEE Standard 455–1985, Standard Test Procedure for Measuring Longitudinal Balance of Telephone Equipment Operating in the Voice Band.

(ii) [Reserved]

(8) RUS standards are available from Publications and Directives Management Branch, Administrative Services Division, Rural Utilities Service, room 0180, South Building, U.S. Department of Agriculture, Washington, DC 20250–1500.

(i) RUS Bulletin 345–50, PE–60 (Sept 1979), RUS Specification for Trunk Carrier Systems.

(ii) [Reserved]

(b) *Types of requirements.* (1) Unless otherwise indicated, the requirements listed in this section are considered to be fixed requirements.

(2) The concentrator system shall communicate with standard T1 digital transmission format at a minimum between the concentrator and central office terminals. Analog conversion functions at remote and central office terminals shall be capable of being eliminated to accommodate end-to-end digital transmission.

(3) The LC shall operate properly as an integral part of the telephone network when connected to physical or carrier derived circuits and central offices meeting RUS specifications and other generally accepted telecommunications practices, such as

Bellcore documents TR–NWT–000303, Integrated Digital Loop Carrier System Generic Requirements, Objectives and Interface; TR–TSY–000008, Digital Interface between the SLC 96 Digital Loop Carrier System and a Local Digital Switch; and TR–TSY–000057, Functional Criteria for Digital Loop Carrier Systems.

(4) For RUS acceptance consideration of a LC, the manufacturer must certify and demonstrate that all requirements specified in this section are available and in compliance with this section.

(5) Certain requirements are included in this section for features which may not be needed for every application. Such features are identifiable by the inclusion in the requirements of some such phrase as ''when specified by the owner'' or ''as specified by the owner.'' In some cases where an optional feature will not be required by an owner, either now or in the future, a system which does not provide this feature shall be considered to be in compliance with the specification for the specific installation under consideration, but not in compliance with the entire specification.

(6) The owner may properly request bids from any supplier of an RUS accepted LC whose system provides all the features which will be required for a specific installation.

(7) When required by the owner, the supplier shall state compliance to the Carrier Serving Area (CSA) requirements, as stated in Bell Communications Research (Bellcore) Standard TR–TSY–000057, Functional Criteria for Digital Loop Carrier Systems.

(c) *Reliability.* (1) The failure rate of printed circuit boards shall not exceed an average of 2.0 percent per month of all equipped cards in all system terminals during the first 3 months after cutover, and shall not exceed an average of 1.0 percent per month of all equipped cards in all system terminals during the second 3-month period. The failure rate for the equipment shall be less than 0.5 percent per month of all equipped cards in all system terminals after 6 months. A failure is considered to be the failure of a component on the PC board which requires it to be repaired or replaced.

(2) The line concentrator terminal units shall be designed such that there will be no more than 4 hours of total outages in 20 years.

(d) *System type acceptance tests.* General test results will be required on each system type. Any system provided in accordance with this section shall be capable of meeting any requirement in this section on a spot-check basis.

(e) *Features required.* The network control equipment and peripheral equipment shall be comprised of solid-state and integrated circuitry components as far as practical and in keeping with the state-of-the-art and economics of the subject system.

(f) *Subscriber lines.*—(1) *General.* (i) The remote LC units shall operate satisfactorily with subscriber lines which meet all of the conditions under the bidder's specifications and all the requirements of this section. This section recognizes that the loop limit of the line concentrator is dependent upon the transmission facility between the LC central office termination and the LC remote unit. When voice frequency (physical) circuits are used, the loop limit from the COE to the subscriber shall be 1900 ohms (including the telephone set). When electronically derived circuits (carrier, lightwave, etc.) are used, the loop limits of the electronic system will control. The bidder shall identify the loop limits of the equipment to be supplied.

(ii) There should be provisions for such types of lines as ground start, loop start, regular subscriber, pay stations, etc.

(2) *Dialing.* (i) *General.* The line concentrator remote and central office terminal equipment shall satisfactorily transmit dialing information when used with subscriber dials having a speed of operation between 8 and 12 dial pulses per second and a break period of 55 to 65% of the total signaling period.

(ii) *Subscriber dial interdigital time.* The remote and central office LC equipment shall permit satisfactory telecommunications operation when used with subscriber rotary dial interdigital times of 200 milliseconds minimum, and pushbutton dialing with 50 milliseconds minimum.

(iii) *Subscriber line pushbutton dialing frequencies.* The frequency pairs assigned for pushbutton dialing when provided by the central office shall be as listed in this paragraph (f)(2)(iii), with an allowable variation of ±1.5 percent:

Low group frequencies (Hz)	High group frequencies (Hz)			
	1209	1336	1477	1633
697	1	2	3	Spare.
770	4	5	6	Spare.
852	7	8	9	Spare.
941	*	0	#	Spare.

(3) *Ringing.* (i) When LC ringing is generated at the remote end, it shall be automatic and intermittent and shall be cut off from the called line upon removal of the handset at the called station during either the ringing or silent period.

(ii) When ringing generators are provided in the LC on an ancillary basis, they shall be accepted or technically accepted by RUS.

(iii) Where ringing is generated at the remote end, the ringing system shall provide sufficient ringing on a bridged basis over the voltage and temperature limits of this specification and over subscriber loops within the limits stated by the manufacturer. The manufacturer shall state the minimum number (not less than two) of main station ringers that can be used for each ringing option available.

(g) *Traffic.* (1)(i) The minimum grade of service for traffic in the line concentrator shall be B=.005 using the Traffic Table, based on the Erlang Lost-Calls-Cleared Formula. Required grade of service, traffic assumptions and calculations for the particular application being implemented shall be supplied by the bidder.

(ii) Service to customers served by a traffic sensitive LC should not be noticeably different than the service to customers served by the dedicated physical pairs from the central office so that uniform grade of service will be provided to all customers in any class of service. Reference § 1755.522(p)(1)(i), RUS General Specification for Digital, Stored Program Controlled Central Office Equipment.

(2) *Traffic and Plant Registers.* Traffic measurements consist of three types—peg count, usage, and congestion. A peg count register scores one count per call attempt per circuit group such as trunks, digit receivers, senders, etc. Usage counters measure the traffic density in networks, trunks and other circuit groups. Congestion registers score the

number of calls which fail to find an idle circuit in a trunk group or to find an idle path through the switching network when attempting to connect two given end points. These conditions constitute ''network blocking.''

(3) When required, traffic data will be stored in electronic storage registers or a block of memory consisting of one or more traffic counters for each item to be measured. The bidder shall indicate what registers are to be supplied, their purpose and the means for displaying the information locally (or at a remote location when available).

(h) *Transmission requirements.* (1) *General.* Unless otherwise stated, the requirements in paragraphs (h) (2) through (20) of this section are specified in terms of analog measurements made from Main Distributing Frame (MDF) terminals to MDF terminals excluding cabling loss.

(2) *Telephone transmitter battery supply.* A minimum of 20 milliamperes, dc, shall be provided for the transmitter of the telephone set at the subscriber station under all loop conditions specified by the bidder. The telephone set is assumed to have a resistance of 200 ohms.

(3) *Impedance—subscriber loops.* For the purpose of this section, the input impedance of all subscriber loops served by the equipment is arbitrarily considered to be 900 ohms in series with 2.16 microfarad capacitor at voice frequencies.

(4) *Battery noise.* Noise across the remote terminal battery at power panel distribution bus terminals shall not exceed 35 dBrnC during the specified busy hour.

(5) *Stability.* The long-term allowable variation in loss through the line concentrator system shall be ±0.5 dB from the loss specified by the bidder.

(6) *Return loss.* The specified return loss values are determined by the service and type of port at the measuring end. Two-wire ports are measured at 900 ohms in series with 2.16 microfarads, and 4-wire ports are measured at 600 ohms resistive. When other balance networks are supplied, test equipment arranged for operation with the supplied network(s) may be used. The requirement given shall meet the following cited values on each balance network available in the system:

Line-to-Line or Line-to-Trunk (2–Wire)
Echo Return Loss (ERL)—18 dB, Minimum
Singing Return Loss (SRL)—Low—15 dB, Minimum
Singing Return Loss (SRL)—High—18 dB, Minimum

(7) *Longitudinal balance.* The minimum longitudinal balance, with dc loop currents between 20 to 70 mA, shall be 60 dB at all frequencies between 60 and 2000 Hz, 55 dB at 2700 Hz and 50 dB at 3400 Hz. The method of measurement shall be as specified in the IEEE standard 455, ''Standard Testing Procedure for Measuring Longitudinal Balance of Telephone Equipment Operating in the Voice Band.'' Source voltage level shall be 10 volts root mean square (rms) where conversation battery feed originates at the remote end.

(8) *60 hz longitudinal current immunity.* The LC 60 Hz longitudinal current immunity shall be measured in accordance with Figure 1 of this section. Under test conditions cited on Figure 1 of this section, the system noise shall be 23 dBrnC or less as follows:

BILLING CODE 3410–15–P

Figure 1

Measuring the Effects of Low Frequency Induction

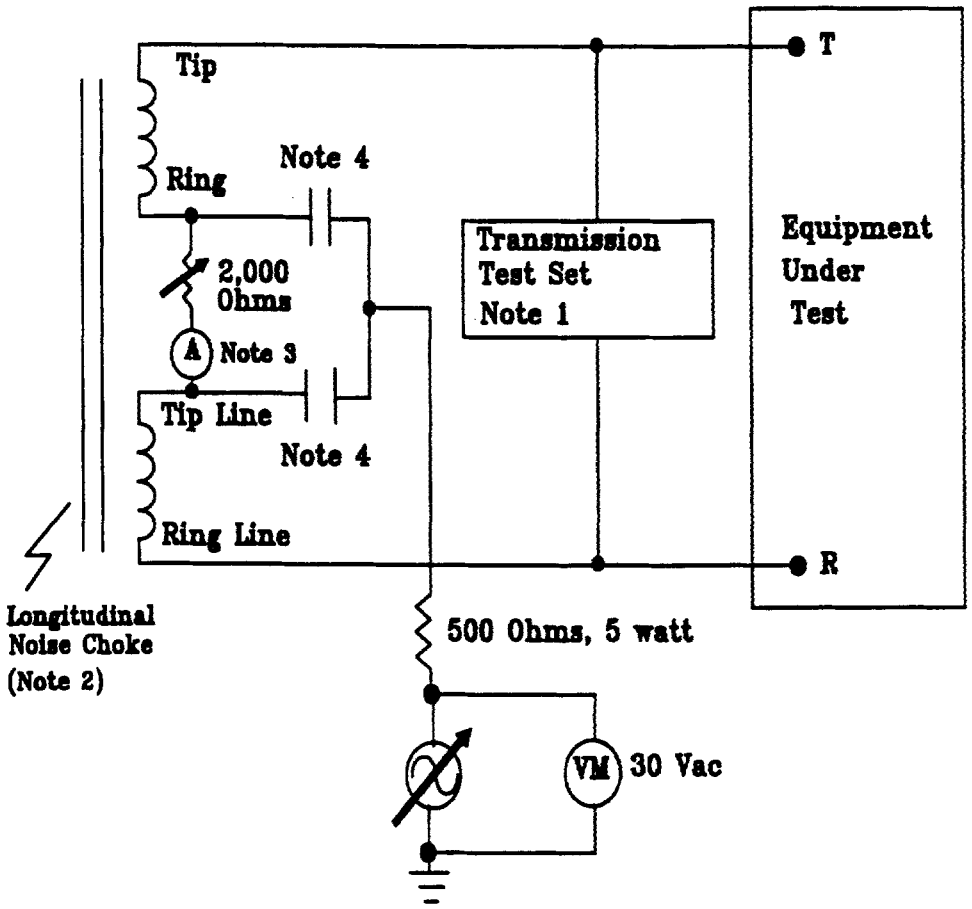

Notes:

1. Wilcom T194C or Equivalent (900 ohm termination, C-message weighting, hold coil off)
2. SNC Noise Choke 35 W, or equivalent
3. Test at 0.020 Adc and 0.070 Adc
4. 2 ± 0.001 microfarad, 150 Vdc

BILLING CODE 3410–15–C

(9) *Steady noise (idle channel at 900 ohm impedance).* Steady noise: Measure on terminated call. Noise measurements shall comply with the following:

Maximum—23 dBrnC0
Average—18 dBrnC0 or Less
3KHz Flat—Less than 35 dBrnO as an Objective

(10) *Impulse noise.* LC central office terminal equipment shall have an impulse noise limit of not more than five counts exceeding 54 dBrnC0 voice band weighted in a 5-minute period on six such measurements made during the busy hour. A WILCOM T–194C Transmission Test Set, or equivalent, should be used for the measurements. The measurement shall be made by establishing a normal connection from the noise counter through the switching equipment in its off-hook condition to a quiet termination of 900 ohms impedance. Office battery and signaling circuit wiring shall be suitably segregated from voice and carrier circuit wiring, and frame talking battery filters provided, if and as required, in order to meet these impulse noise limits.

(11) *Crosstalk coupling.* Worst case equal level crosstalk shall be 65 dB minimum in the range 200 to 3400 Hz. This shall be measured between any two paths through the system by connecting a 0 dBm0 level tone to the disturbing pair.

(12) *Digital error rate.* The digital line concentrator shall not introduce more than one error in 10^8 bits averaged over a 5-minute period, excluding the least significant bit.

(13) *Quantizing distortion.* (i) The system shall meet the following requirements:

Input level (dBm0) 1004 or 1020 Hz	Minimum signal to distortion with C-message weighting
0 to −30	33 dB
−30 to −40	27 dB
−40 to −45	22 dB

(ii) Due to possible loss of the least significant bit on direct digital connections, a signal to distortion degradation of up to 2 dB may be allowed where adequately justified by the bidder.

(14) *Overload level.* The overload level shall be +3 dBm0.

(15) *Gain tracking (linearity)* shall meet the following requirements:

Input signal level [1]	Maximum gain deviation
+3 to −37 dBm0	±0.5 dB
−37 to −50 dBm0	±1 dB

[1] 1004 Hz reference at 0 dBm0.

(16) *Frequency response (loss relative to 1004 Hz)* for line-to-line (via trunk group or intra-link) connections shall meet the following requirements:

Frequency (Hz)	Loss at 0 dBm0 input [1]
60	20 dB Min.[2]
300	−1 to +3 dB
600 to 2400	+1 dB
3400	−1 to +3 dB

[1] (−) means less loss and (+) means more loss.
[2] Transmit End.

(17) *Envelope delay distortion.* On any properly established connection, the envelope delay distortion shall not exceed the following limits:

Frequency (Hz)	Microseconds
1000 to 2600	190
800 to 2800	350
600 to 3000	500
400 to 3200	700

(18) *Absolute delay.* The absolute one-way delay through the line concentrator, excluding delays associated with the central office switching equipment, shall not exceed 1000 microseconds analog-to-analog measured at 1800 Hz.

(19) *Insertion loss.* The insertion loss in both directions of transmission at 1004 Hz shall be included in the insertion loss requirements for the connected COE switch and shall not increase the overall losses through the combined equipment beyond the values for the COE alone, when operated through a direct digital interface. Systems operated with a (VF) line circuit interface may introduce up to 3 dB insertion loss. Reference § 1755.522(q)(3).

(20) *Detailed requirements for direct digital connections.* (i) This paragraph (h)(20) covers the detailed requirements for the provision of interface units which will permit direct digital connection between the host central office and line concentrator subscriber terminals over digital facilities. The digital transmission system shall be compatible with T1 type span lines using a DS1 interface and other digital interfaces that may be specified by the owner. The RUS specification for the T1 span line equipment is PE–60. Other span line techniques may also be used. Diverse span line routing may be used when specified by the owner.

(ii) The output of a digital-to-digital port shall be Pulse Code Modulation (PCM), encoded in eight-bit words using the mu–255 encoding law and D3 encoding format, and arranged to interface with a T1 span line.

(iii) Signaling shall be by means of Multifrequency (MF) or Dual Pulsing (DP) and the system which is inherent in the A and B bits of the D3 format. In the case where A and B bits are not used for signaling or system control, these bits shall only be used for normal voice and data transmission.

(iv) When a direct digital interface between the span line and the host central office equipment is to be implemented, the following requirements shall be met:

(A) The span line shall be terminated in a central office as a minimum a DS1 (1.544Mb/s) shall be provided;

(B) The digital central office equipment shall be programmed to support the operation of the digital port with the line concentrator subscriber terminal;

(C) The line concentrator subscriber terminal used with a direct digital interface shall be interchangeable with the subscriber terminal used with a central office terminal.

(i) *Alarms.* The system shall send alarms for such conditions as blown fuses, blocked controls, power failure in the remote terminal, etc., along with its own status indication and status of dry relay contact closures or solid-state equivalent to the associated central office alarm circuits. Sufficient system alarm points shall be provided from the remote terminal to report conditions to the central office alarm system. The alarms shall be transmitted from the remote terminal to the central office terminal as long as any part of the connecting link is available for this transmission. Fuses shall be of the alarm and indicator type, and their rating designated by numerals or color code on fuse positions.

(j) *Electrical protection*—(1) *Surge protection.* (i) Adequate electrical protection of line concentrator equipment shall be included in the design of the system. The characteristics and application of protection devices must be such that they enable the line concentrator equipment to withstand, without damage or excessive protector maintenance, the dielectric stresses and currents that are produced in line-to-ground and tip-to-ring circuits through the equipment as a result of induced or conducted lightning or power system fault-related surges. All wire terminals connected to outside plant wire or cable pairs shall be protected from voltage and current surges.

(ii) Equipment must pass laboratory tests, simulating a hostile electrical environment, before being placed in the field for the purpose of obtaining field experience. For acceptance consideration RUS requires manufacturers to submit recently completed results (within 90 days of submittal) of data obtained from the prescribed testing. Manufacturers are expected to detail how data and tests were conducted. There are five basic types of laboratory tests which must be applied to exposed terminals in an effort to determine if the equipment will survive. Figure 2 of this section, Summary of Electrical Requirements and Tests, identifies the tests and their application as follows:

FIGURE 2.—SUMMARY OF ELECTRICAL REQUIREMENTS AND TESTS

Test	Application criteria	Peak voltage or current	Surge waveshape	Number of applications and maximum time between	Comments
Current surge	Low impedance paths exposed to surges.	500A or lesser current (see fig. 4).	10×1000 μs	5 each polarity at 1 minute intervals.	None.
60 Hz current carrying.	High or low impedance paths exposed to surges.	10A rms or lesser current (see fig. 6).	11 Cycles of 60 Hz (0.183 Sec.).	3 each at 1 minute intervals.	None.
AC Power service surge voltage.	AC power service connection.	2500V or +3 σ clamping V of arrester employed at 10kV/μs.	1.2×50 μs	5 each polarity at 1 minute intervals.	AC arrester, if used, must be removed. Communications line arresters, if used, remain in place.
Voltage surge ...	High impedance paths exposed to surges.	1000V or +3 σ dc breakdown of arrester employed.	10×1000 μs	5 each polarity at 1 minute intervals.	All primary arresters, if used, must be removed.
Arrester response delay.	Paths protected by arresters, such as gas tubes, with breakdown dependent on V. rate of rise.	+3 σ breakdown of arrester employed at 100V/μs of rise.	100V/μs rise decay to ½ V. in tube's delay time.	5 each polarity at 1 minute intervals.	All primary arrestors, if used, must be removed.

(iii) Electrical protection requirements for line concentrator equipment can be summarized briefly as follows:

(A) Current surge tests simulate the stress to which a relatively low impedance path may be subjected before main frame protectors break down. Paths with a 100 Hz impedance of 50 ohms or less shall be subjected to current surges, employing a 10 x 1000 microsecond waveshape as defined in Figure 3 of this section, Surge Waveshape. For the purpose of determining this impedance, arresters which are mounted within the equipment are to be considered zero impedance. The crest current shall not exceed 500A; however, depending on the impedance of the test specimen this value of current may be lower. The crest current through the sample, multiplied by the sample's 100 Hz impedance, shall not exceed 1000 V. Where sample impedance is less than 2 ohms, peak current shall be limited to 500A as shown in Figure 4 of this section, Current Surge Tests. Figures 3 and 4 follow:

BILLING CODE 3410–15–P

Figure 3

Explanation of Surge Waveshape

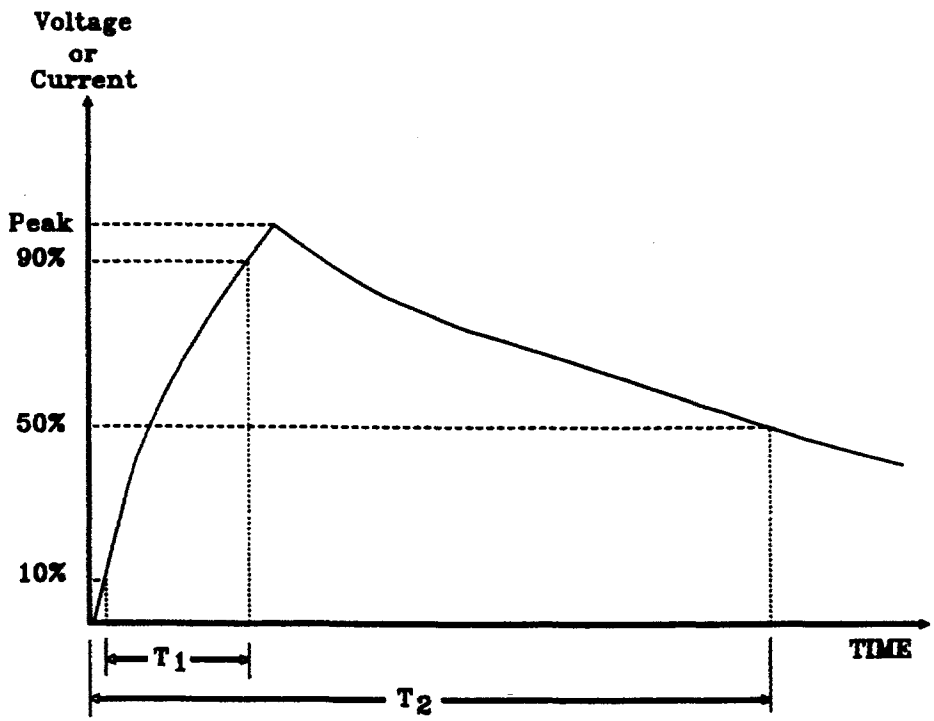

Surge Waveshape is defined as follows:

Rise Time x Time to Decay to Half Crest Value
(For example, 10 x 1000 μs)

Notes: T_1 = Time to determine the rate of rise. The rate of rise is determined as the slope between 10% and 90% of peak voltage or current.

T_2 = Time to 50% of peak voltage (decay to half value).

Figure 4

Current Surge Test

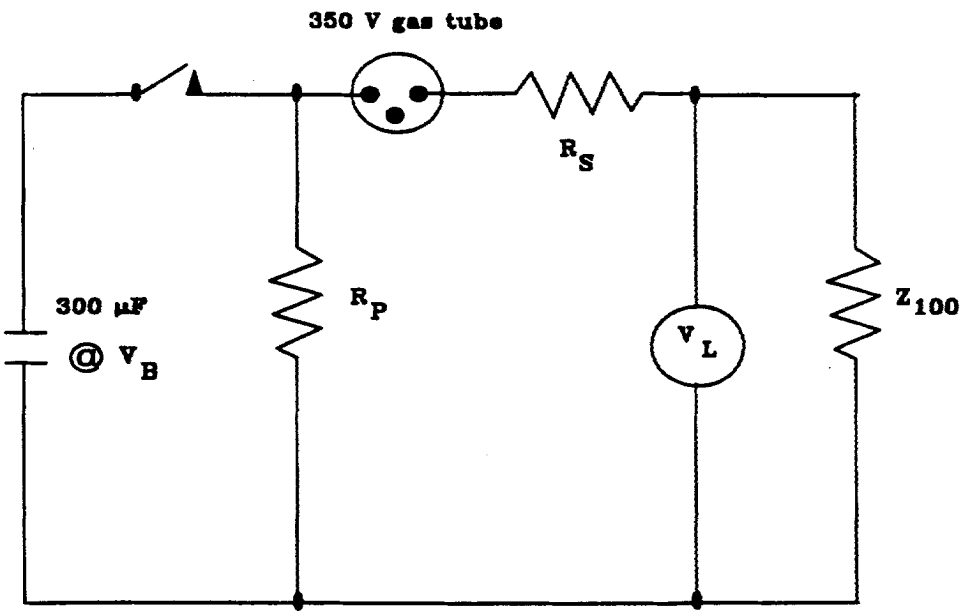

V_L = Not to exceed 1000V
V_B = Charging Voltage
Z_{100} = Test Specimen Impedance to be measured at 100 Hz.
R_P = Parallel Resistance (Waveshape)
R_S = Series Resistance (Current Limiting)

Z_{100}	R_S	R_P	V_B
0	5	∞	2500
1	4	∞	2500
2	3	∞	2500
3	2	∞	1670
4	1	∞	1250
5	0	∞	1000
7.5	0	15	1000
10	0	10	1000
15	0	7.5	1000
20	0	6.7	1000
25	0	6.25	1000
30	0	6	1000
40	0	5.7	1000
50	0	5.5	1000

BILLING CODE 3410–15–C

(B) Sixty Hertz (60 Hz) current carrying tests shall be applied to simulate an ac power fault which is conducted to the unit over the cable pairs. The test shall be limited to 10 amperes Root Mean Square (rms) of 60 Hz ac for a period of 11 cycles (0.1835 seconds) and shall be applied longitudinally from line to ground.

(C) AC power service surge voltage tests shall be applied to the power input terminals of ac powered devices to simulate switching surges or lightning-induced transients on the ac power system. The test shall employ a 1.2 x 50 microsecond waveshape with a crest voltage of 2500 V. Communications line protectors may be left in place for these tests.

(D) Voltage surge tests which simulate the voltage stress to which a relatively high impedance path may be subjected before primary protectors break down and protect the circuit. To ensure coordination with the primary protection while reducing testing to the minimum, voltage surge tests shall be conducted at a 1000 volts with primary arresters removed for devices protected by carbon blocks, or the +3 sigma dc breakdown voltage of other primary arresters. Surge waveshape should be 10 x 1000 microseconds.

(E) Arrester response delay tests are designed to stress the equipment in a manner similar to that caused by the delayed breakdown of gap type arresters when subjected to rapidly rising voltages. Arresters shall be removed for these tests, the peak surge voltage shall be the +3 sigma breakdown voltage of the arrester in question on a voltage rising at 100 V per microsecond, and the time for the surge to decay to half voltage shall equal at least the delay time of the tube as explained in Figure 5 of this section, Arrester Response Delay Time as follows:

BILLING CODE 3410–15–P

Figure 5

Explanation of Arrester Response Delay Time

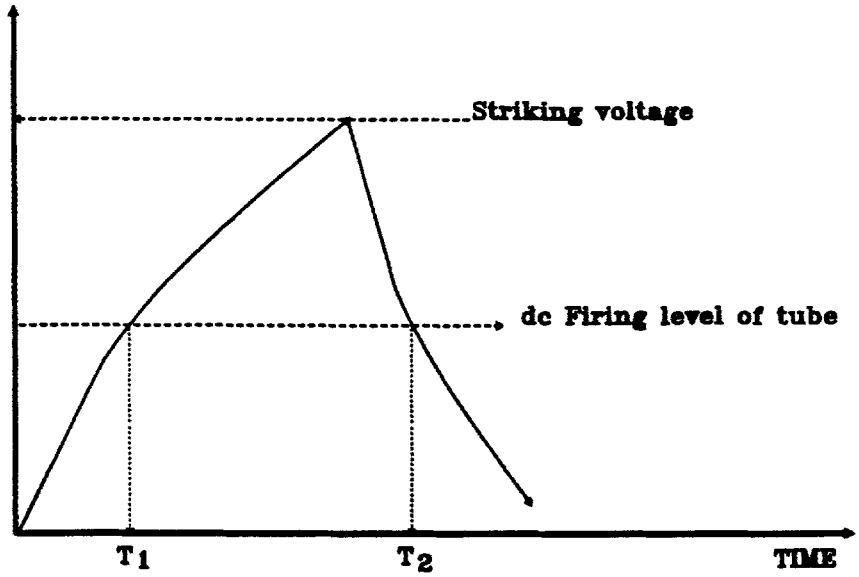

$D = T_2 - T_1$ = Delay time of tube

Note: The delay time is that period of time when the potential across an arrester exceeds its dc firing level.

BILLING CODE 3410–15–C

(iv) Tests shall be conducted in the following sequence. As not all tests are required in every application, non-applicable tests should be omitted:

(A) Current Impulse Test;

(B) Sixty Hertz (60 Hz) Current Carrying Tests;

(C) AC Power Service Impulse Voltage Test;

(D) Voltage Impulse Test; and

(E) Arrester Response Delay Time Test.

(v) A minimum of five applications of each polarity for the surge tests and three for the 60 Hz Current Carrying Tests are the minimum required. All tests shall be conducted with not more than 1 minute between consecutive applications in each series of three or five applications to a specific configuration so that heating effects will be cumulative. See Figure 6 of this section, 60 Hz Current Surge Tests as follows:

BILLING CODE 3410–15–P

Figure 6

60 Hz Current Surge Test

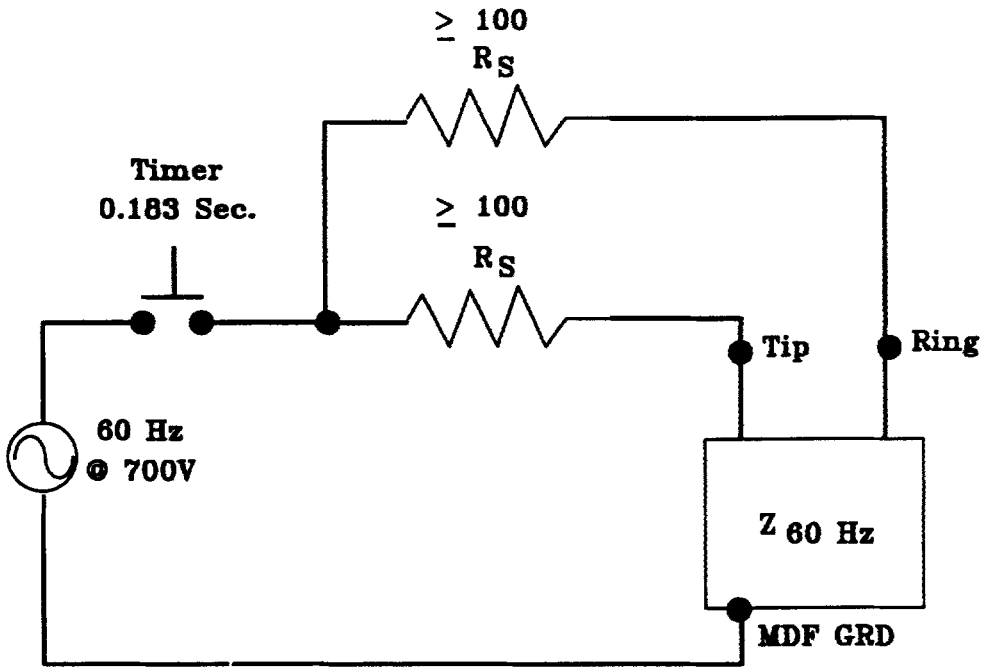

V - 700 Volts root mean square (rms) (Approximately 1000V Peak).
Z_{60} - Test specimen impedance to be measured at 60 Hz.
R_S - Series Resistance (current limiting) in each side of line. (Source impedance never less than 50 Ω longitudinal.)

$Z_{60\ Hz}$	R_S
0	140
10	120
20	100
50	100
Over 50	100

BILLING CODE 3410–15–C

(vi) Tests shall be applied between each of the following terminal combinations for all line operating conditions:

(A) Line tip to ring;

(B) Line ring to ground;

(C) Line tip to ground; and

(D) Line tip and ring tied together to ground.

(2) *Dielectric strength*. (i) Arresters shall be removed for all dielectric strength tests.

(ii) Direct current potentials shall be applied between all line terminals and the equipment chassis and between these terminals and grounded equipment housings in all instances where the circuitry is dc open circuit from the chassis, or connected to the chassis through a capacitor. The duration of all dielectric strength tests shall be at least 1 second. The applied potential shall be at a minimum equal to the plus 3 sigma dc breakdown voltage of the arrester, provided by the line concentrator manufacturer.

(3) *Insulation resistance*. Following the dielectric tests, the insulation resistance of the installed electrical circuits between wires and ground, with the normal equipment grounds removed, shall not be less than 10 megohms at 500 volts dc at a temperature of 68 °F (20 °C) and at a relative humidity of approximately 50 percent. The measurement shall be made after the meter stabilizes, unless the requirement is met sooner. Arresters shall be removed for these tests.

(4) *Self-protection*. (i) All components shall be capable of being continuously energized at rated voltage without injury. Design precautions must be taken to prevent damage to other equipment components when a particular component fails.

(ii) Printed circuit boards or similar equipment employing electronic components should be self-protecting against external grounds applied to the connector terminals. Board components and coatings applied to finished products shall be of such material or so treated that they will not support combustion.

(iii) Every precaution shall be taken to protect electrostatically sensitive components from damage during handling. This shall include written instructions and recommendations.

(k) *Miscellaneous*—(1) *Interconnect wire*. All interconnect wire shall be of soft annealed tinned copper wire meeting the requirements of ASTM Specification B33–91 and of suitable cross-section to provide safe current carrying capacity and mechanical strength. The insulation of installed wire, connected to its equipment and frames, shall be capable of withstanding the same insulation resistance and dielectric strength requirements as given in paragraphs (j)(2) and (j)(3) of this section at a temperature of 120 °F (49 °C), and a relative humidity of 90 percent.

(2) *Wire wrapped terminals*. These terminals are preferred and where used shall be of a material suitable for wire wrapping. The connections to them shall be made with a wire wrapping tool with the following minimum number of successive non-overlapping turns of bare tinned copper wire in contact with each terminal:

(i) 6 turns of 30 gauge;

(ii) 6 turns of 26 gauge;

(iii) 6 turns of 24 gauge; or

(iv) 5 turns of 22 gauge.

(3) *Protection against corrosion*. All metal parts of equipment frames, distributing frames, cable supporting framework and other exposed metal parts shall be constructed of corrosion resistant materials or materials plated or painted to render them adequately corrosion resistant.

(4) *Screws and bolts*. Screw threads for all threaded securing devices shall be of American National Standard form in accordance with Federal Standard H28, unless exceptions are granted to the manufacturer of the switching equipment. All bolts, nuts, screws, and washers shall be of nickel-copper alloy, steel, brass or bronze.

(5) *Environmental requirements*. (i) The bidder shall specify the environmental conditions necessary for safe storage and satisfactory operation of the equipment being bid. If requested, the bidder shall assist the owner in planning how to provide the necessary environment for the equipment.

(ii) To the extent practicable, the following temperature range objectives shall be met:

(A) For equipment mounted in central office and subscriber buildings, the carrier equipment shall operate satisfactory within an ambient temperature range of 32 °F to 120 °F (0 °C to 49 °C) and at 80 percent relative humidity between 50 °F and 100 °F (10 °C and 38 °C); and

(B) Equipment mounted outdoors in normal operation (with cabinet doors closed) shall operate satisfactorily within an ambient temperature range (external to cabinet) of −40 °F to 140 °F (−40 °C to 60 °C) and at 95 percent relative humidity between 50 °F to 100 °F (10 °C to 38 °C). As an alternative to the (60 °C) requirement, a maximum ambient temperature of 120 °F (49 °C) with equipment (cabinet) exposed to direct sunlight may be substituted.

(6) *Stenciling*. Equipment units and terminal jacks shall be adequately designated and numbered. They shall be stenciled so that identification of equipment units and leads for testing or traffic analysis can be made without unnecessary reference to prints or descriptive literature.

(7) *Quantity of equipment bays*. Consistent with system arrangements and ease of maintenance, space shall be provided on the floor plan for an orderly layout of future equipment bays. Readily accessible terminals will be provided for connection to interbay and frame cables to future bays. All cables, interbay and intrabay (excluding power), if technically feasible, shall be terminated at both ends by connectors.

(8) *Radio and television interference*. Measures shall be employed by the bidders to limit the radiation of radio frequencies generated by the equipment so as not to interfere with radio, television receivers, or other sensitive equipment.

(9) *Housing*. (i) When housed in a building supplied by the owner, a complete floor plan including ceiling height, floor loading, power outlets, cable entrances, equipment entry and travel, type of construction, and other pertinent information shall be supplied.

(ii) In order to limit corrosion, all metal parts of the housing and mounting frames shall be constructed of suitable corrosion resistant materials or materials protectively coated to render them adequately resistant to corrosion under the climatic and atmospheric conditions existing in the area in which the housing is to be installed.

(10) *Distributing frame*. (i) The line concentrator terminal equipment located at the central office shall be protected by the central office main distribution frame. The bidder may supply additional protection capability as appropriate. All protection devices (new or existing) shall be arranged to operate in a coordinated manner to protect equipment, limit surge currents, and protect personnel.

(ii) The distributing frame shall provide terminals for terminating all incoming cable pairs. Arresters shall be provided for all incoming cable pairs, or for a smaller number of pairs if specified.

(iii) The current carrying capacity of each arrester and its associated mounting shall coordinate with a #22 gauge copper conductor without causing a self-sustaining fire or permanently damaging other arrester positions. Where all cable pairs entering the housing are #24 gauge or finer, the arresters and mountings need only

coordinate with #24 gauge cable conductors.

(iv) Remote terminal protectors may be mounted and arranged so that outside cable pairs may be terminated on the left or bottom side of protectors (when facing the vertical side of the MDF) or on the back surface of the protectors. Means for easy identification of pairs shall be provided.

(v) Protectors shall have a ''dead front'' (either insulated or grounded) where live metal parts are not readily accessible.

(vi) Protectors shall be provided with an accessible terminal of each incoming conductor which is suitable for the attachment of a temporary test lead. They shall also be constructed so that auxiliary test fixtures may be applied to open and test the subscriber's circuit in either direction. Terminals shall be suitable for wire wrapped connections or connectorized.

(vii) If specified, each protector group shall be furnished with a factory assembled tip cable for splicing to the outside cable; the tip cable shall be 20 feet (6.1 m) in length, unless otherwise specified. Tip cable used shall be RUS accepted.

(viii) Protector makes and types used shall be RUS accepted.

(l) *Power equipment*—(1) *General.* When specified, batteries and charging equipment shall be supplied for the remote terminal of the line concentrator.

(2) *Operating voltage.* (i) The nominal operating voltage of the central office and remote terminal shall be 48 volts dc, provided by a battery with the positive side tied to system ground.

(ii) Where equipment is dc powered, it must operate satisfactorily over a range of 50 volts ± 6 volts dc.

(iii) Where equipment is ac powered, it must operate satisfactorily over a range of 120±10 volts or 220±10 volts ac.

(3) *Batteries.* (i) Unless otherwise specified by the owner, sealed batteries shall be supplied for the remote line concentrator terminal.

(ii) The batteries shall have an ampere hour load capacity of no less than 8 busy hours. When an emergency ac supply source is available, the battery reserve may be reduced to 3 busy hours.

(iii) The batteries shall be sealed when they are mounted in the cabinet with the concentrator equipment.

(iv) When specified by the owner, battery heaters shall be supplied in a bidder-furnished housing.

(4) *Charging equipment.* (i) One charger capable of carrying the full dc power load of the remote terminal shall be supplied unless otherwise specified by the owner.

(ii) Charging shall be on a full float basis. The rectifiers shall be of the full wave, self-regulating, constant voltage, solid-state type and shall be capable of being turned on and off manually.

(iii) When charging batteries, the voltage at the battery terminals shall be adjustable and shall be set at the value recommended for the particular battery being charged, provided it is not above the maximum operating voltage of the central office switching equipment. The voltage shall not vary more than ±0.02 volt dc per cell between 10% load and 100% load. Between 3% and 10% load, the output voltage shall not vary more than ±0.04 volt dc per cell. Beyond full load current the output voltage shall drop sharply. The above output voltage shall be maintained with input line voltage variations of plus or minus 10 percent. Provision shall be made to manually change the output voltage of the rectifier to 2.25 volts per cell to provide an equalization charge on the battery.

(iv) The charger noise, when measured with a suitable noise measuring set and under the rated battery capacitance and load conditions, shall not exceed 22 dBrnC. See Figure 7 of this section, Charger Noise Test as follows:

BILLING CODE 3410–15–P

Figure 7

Charger Noise Test

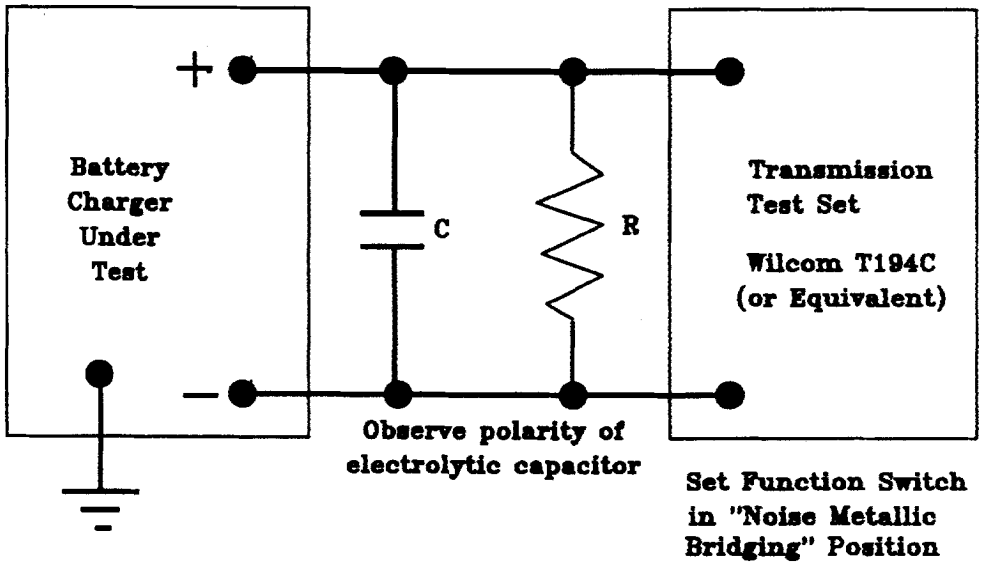

Note (1) The manufacturer may elect to eliminate the capacitor C from the measurement.

Capacitance C in μF = 30,000 μF per ampere-hour per cell. For example, 25 cells at 100 ampere-hour would be equivalent to a capacitance of:

$$(30{,}000 \times 100)/25 = 120{,}000\ \mu F$$

(2) The value of the resistive load R is determined by the nominal battery voltage in volts divided by the full load rating in amperes. For example, for a 48 volt battery and a full load current of 24 amperes, the load resistance R is 48/24 = 2 ohms of appropriate power handling capacity.

BILLING CODE 3410–15–C

(v) The charging equipment shall be provided with a means for indicating a failure of charging current whether due to ac power failure, an internal failure in the charger, or to other circumstances which might cause the output voltage of the charger to drop below the battery voltage. Where a supplementary constant current charger is used, an alarm shall be provided to indicate a failure of the charger.

(vi) Audible noise developed by the charging equipment shall be kept to a minimum. Acoustic noise resulting from operation of the rectifier shall be expressed in terms of dB indicated on a sound level meter conforming to American National Standards Institute S1.4, and shall not exceed 65 dB (A-weighting) measured at any point 5 feet (1.5m) from any vertical surface of the rectifier.

(vii) The charging equipment shall be designed so that neither the charger nor the central office equipment is subject to damage in case the battery circuit is opened for any value of load within the normal limits.

(5) *Power panel.* (i) Battery and charger control switches, dc voltmeters, dc ammeters, fuses and circuit breakers, supervisory and timer circuits shall be provided as required. Portable or panel mounted frequency meters or voltmeters shall be provided as specified by the owner.

(ii) Power panels, cabinets and shelves, and associated wiring shall be designed initially to handle the line concentrator terminal when it reaches its ultimate capacity as specified by the owner.

(iii) The power panel shall be of the ''dead front'' type.

(6) *Ringing equipment.* The ringing system shall provide sufficient ringing on a bridged basis over the voltage and temperature limits of this section and over subscriber drops within the limits stated by the bidder. The ringing system shall be without operational problems such as bell tapping during dialing. The bidder shall state the minimum number (not less than two) of main station ringers that can be used for each ringing option available.

(7) *Interrupter equipment.* The interrupter may be an integral part of the system or may be part of the associated central office equipment connected to the line concentrator central office terminal.

(8) *Special systems.* Manufacturers of LC systems that operate by extending ringing current from the central office shall state their required input ringing (voltage and frequency) and the limitations on the connected subscriber loop.

(m) *Fusing requirements*—(1) *General.* (i) The equipment shall be completely wired and equipped with fuses, trouble signals, and all associated equipment for the wire capacity of the frames or cabinets provided.

(ii) Design precautions shall be taken to prevent the possibility of equipment damage arising from the insertion of an electronic package into the wrong connector or the removal of a package from any connector or improper insertion of the correct card in its connector.

(2) *Fuses.* Fuses and circuit breakers shall be of an alarm and indicator type, except where the fuse or breaker location is indicated on the alarm printout. Their rating shall be designated by numerals or color codes on the fuse or the panel.

(n) *Trouble location and test*—(1) *Equipment.* (i) Trouble indications in the system may be displayed in the form of lights on the equipment units or printed circuit boards.

(ii) When required, a jack or other connector shall be provided to connect a fault or trouble recorder (printer or display).

(2) *Maintenance system.* (i) The maintenance system shall monitor and maintain the system operation without interruption of call processing except for major failures.

(ii) The maintenance system shall be arranged to provide the ability to determine trouble to an individual card, functional group of cards, or other equipment unit.

(o) *Spare parts.* Lists of spare parts and maintenance tools as recommended by the bidder shall be provided. The cost of such tools and spare parts shall be indicated and shall not be included in the base price.

(p) *Drawings and printed material.* (1) The bidder shall supply instructional material for each line concentrator system involved at the time of delivery of the equipment. It is not the intent of this section to require system documentation necessary for the repair of individual circuit boards.

(2) Three complete sets of legible drawings shall be provided for each central office to be accessed. Each set shall include all of the following:

(i) Drawings of major equipment items such as frames, with the location of major component items of equipment shown therein;

(ii) Wiring diagrams indicating the specific method of wiring used on each item of equipment and interconnection wiring between items of equipment;

(iii) Maintenace drawings covering each equipment item that contains replaceable parts, appropriately identifying each part by name and part number; and

(iv) Job drawings including all drawings that are individual to the particular line concentrator involved such as mainframe, power equipment, etc.

(3) The following information shall also be furnished:

(i) A complete index of required drawings;

(ii) An explanation of electrical principles of operation of overall concentrator system;

(iii) A list of tests which can be made with each piece of test equipment furnished and an explanation of the method of making each test;

(iv) A sample of each form recommended for use in keeping records;

(v) The criteria for analyzing results of tests and determining appropriate corrective action;

(vi) A set of general notes on methods of isolating equipment faults to specific printed circuit cards in the equipment;

(vii) A list of typical troubles which might be encountered, together with general indications as to probable location of each trouble; and

(viii) All special line concentrator system grounding requirements.

(4) When installation is to be done by the bidder a complete set of drawings shall be provided by the owner, such as floor plans, lighting, grounding and ac power access.

(q) *Installation and acceptance.*—(1) *General.* Paragraphs (q)(2)(i) through (q)(3)(xxi) of this section covers the general requirements for the installation of line concentrator equipment by the bidder, and outlines the general conditions to be met by the owner in connection with such installation work. The responsibilities apply in both the central office installation and remote terminal installations, unless otherwise noted.

(2) *Responsibilities of owner.* The owner shall:

(i) Allow the bidder and its employees free access to the premises and facilities at all hours during the progress of the installation;

(ii) Provide access to the remote site and any other site for development work needed during the installation;

(iii) Take such action as necessary to ensure that the premises are dry and free from dust and in such condition as not to be hazardous to the installation personnel or the material to be installed (not required when remote terminal is not installed in a building);

(iv) Provide heat or air conditioning when required and general illumination in rooms in which work is to be performed or materials stored;

(v) Provide suitable openings in buildings to allow material to be placed in position (not required when a remote terminal is not installed in a building);

(vi) Provide the necessary conduit and commercial and dc-ac inverter output power to the locations shown on the approved floor plan drawings;

(vii) Provide 110 volts a.c., 60 Hz commercial power equipped with a secondary arrester and a reasonable number of outlets for test, maintenance and installation equipment;

(viii) Provide suitable openings or channels and ducts for cables and conductors from floor to floor and from room to room;

(ix) Provide suitable ground leads, as designated by the bidder (not required when remote terminal is not installed in a building);

(x) Provide the necessary wiring, central office ground and commercial power service, with a secondary arrester, to the location of an exterior remote terminal installation based on the voltage and load requirements furnished voltage and load requirements furnished by the bidder;

(xi) Test at the owners expense all lines and trunks for continuity, leakage and loop resistance and ensure that all lines and trunks are suitable for operation with the central office and remote terminal equipment specified;

(xii) Make alterations and repairs to buildings necessary for proper installation of material, except to repair damage for which the bidder or its employees are responsible;

(xiii) Connect outside cable pairs on the distributing frame (those connected to protectors);

(xiv) Furnish all line, class of service assignment, and party line assignment information to permit bidder to program the data base memory within a reasonable time prior to final testing;

(xv) Release for the bidder's use, as soon as possible, such portions of the existing plant as are necessary for the proper completion of such tests as require coordination with existing facilities including facilities for T1 span lines with properly installed repeaters between the central office and the remote terminal installations;

(xvi) Make prompt inspections as it deems necessary when notified by the bidder that the equipment, or any part thereof, is ready for acceptance;

(xvii) Provide adequate fire protection apparatus at the remote terminal, including one or more fire extinguishers or fire extinguishing systems of the gaseous type, that has low toxicity and effect on equipment;

(xviii) Provide necessary access ports for cable, if underfloor cabling is selected;

(xix) Install equipment and accessory plant devices mounted external to the central office building and external to the repeater and other outside housings including filters, repeater housings, splicing of repeater cable stubs, externally mounted protective devices and other such accessory devices in accordance with written instructions provided by the bidder; and

(xx) Make all cross connections (at the MDF or Intermediate Distribution Frame IDF) between the physical trunk or carrier equipment and the central office equipment unless otherwise specified in appendix A of this section.

(3) *Responsibilities of bidder.* The bidder shall:

(i) Allow the owner and its representatives access to all parts of the building at all times;

(ii) Obtain the owner's permission before proceeding with any work necessitating cutting into or through any part of the building structure such as girders, beams, concrete or tile floors, partitions or ceilings (does not apply to the installation of lag screws, expansion bolts, and similar devices used for fastening equipment to floors, columns, walls, and ceilings);

(iii) Be responsible for and repair all damage to the building due to carelessness of the bidder's workforce, exercise reasonable care to avoid any damage to the owner's switching equipment or other property, and report to the owner any damage to the building which may exist or may occur during its occupancy of the building;

(iv) Consult with the owner before cutting into or through any part of the building structure in all cases where the fireproofing or moisture proofing may be impaired;

(v) Take necessary steps to ensure that all fire fighting apparatus is accessible at all times and all flammable materials are kept in suitable places outside the building;

(vi) Not use gasoline, benzene, alcohol, naphtha, carbon tetrachloride or turpentine for cleaning any part of the equipment;

(vii) Be responsible for delivering the CO and remote terminal equipment to the sites where they will be needed;

(viii) Install the equipment in accordance with the specifications for the line concentrator;

(ix) Have all leads brought out to terminal blocks on the MDF (or IDF if stated in appendix A of this section) and have all terminal blocks identified and permanently labeled;

(x) Use separate shielded type leads grounded at one end only unless otherwise specified by the owner or bidder or tip cables meeting RUS cable crosstalk requirements for carrier frequencies inside the central office;

(xi) Group the cables to separate carrier frequency, voice frequency, signaling, and power leads;

(xii) Make the necessary power and ground connections (location as shown in appendix A of this section) to the purchaser's power terminals and ground bus unless otherwise stated in appendix A of this section (ground wire shall be 6 AWG unless otherwise stated);

(xiii) Place the battery in service in compliance with the recommendations of the battery manufacturer;

(xiv) Make final charger adjustments using the manufacturer's recommended procedure;

(xv) Run all jumpers, except line and trunk jumpers (those connected to protectors) unless otherwise specified in appendix A of this section;

(xvi) Establish and update all data base memories with subscriber information as supplied by the owner until an agreed turnover time;

(xvii) Give the owner notice of completion of the installation at least one week prior to completion;

(xviii) Permit the owner or its representative to conduct tests and inspections after installation has been completed in order that the owner may be assured the requirements for installation are met;

(xix) Allow access, before turnover, by the owner or its representative, upon request, to the test equipment which is to be turned over as a part of the delivered equipment, to permit the checking of the circuit features which are being tested and to permit the checking of the amount of connected equipment to which the test circuits have access;

(xx) Notify the owner promptly of the completion of work of the central office terminals, remote terminals or such portions thereof as are ready for inspection; and

(xxi) Correct promptly all defects for which the bidder is responsible.

(4) *Information to be furnished by bidder.* The bidder shall accompany its bid with the following information:

(i) Two copies of the equipment list and the traffic calculations from which the quantities in the equipment list are determined;

(ii) Two copies of the traffic tables from which the quantities are determined, if other than the Erlang B traffic tables;

(iii) A block diagram of the line concentrator and associated

maintenance equipment will be provided;

(iv) A prescribed method and criteria for acceptance of the completed line concentrator which will be subject to review;

(v) This special grounding requirements including the recommended configuration, suggested equipment and installation methods to be used to accomplish them;

(vi) The special handling and equipment requirements to avoid damage resulting from the discharge of static electricity (see paragraph (j) (4) (iii) of this section) or mechanical damage during transit installation and testing;

(vii) The location of technical assistance service, its availability and conditions for owner use and charges for the service by the bidder; and

(viii) The identification of the subscriber loop limits available beyond the line concentrator.

(5) *Installation requirements.* (i) All work shall be done in a neat, workmanlike manner. Equipment frames or cabinets shall be correctly located, carefully aligned, anchored, and firmly braced. Cables shall be carefully laid with sufficient radius of curvature and protected at corners and bends to ensure against damage from handling or vibration. Exterior cabinet installations for remote terminals shall be made in a permanent, eye-pleasing manner.

(ii) All multiple and associated wiring shall be continuous, free from crosses, reverses, and grounds and shall be correctly wired at all points.

(iii) An inspection shall be made by the owner or its representatives prior to performing operational and performance tests on the equipment, but after all installing operations which might disturb apparatus adjustments have been completed. The inspection shall be of such character and extent as to disclose with reasonable certainty any unsatisfactory condition of apparatus or equipment. During these inspections, or inspections for apparatus adjustments, or wire connections, or in testing of equipment, a sufficiently detailed examination shall be made throughout the portion of the equipment within which such condition is observed, or is likely to occur, to disclose the full extent of its existence, where any of the following conditions are observed:

(A) Apparatus or equipment units failing to compare in quantity and type to that specified for the installation;

(B) Apparatus or equipment units damaged or incomplete;

(C) Apparatus or equipment affected by rust, corrosion or marred finish; and

(D) Other adverse conditions resulting from failure to meet generally accepted standards of good workmanship.

(6) *Operational tests.* (i) Operational tests shall be performed on all circuits and circuit components to ensure their proper functioning in accordance with appropriate explanation of the operation of the circuit.

(ii) All equipment shall be tested to ensure proper operation with all components connected in all possible combinations and each line shall be tested for proper ring, ring trip and supervision.

(iii) All fuses shall be verified for continuity and correct rating. Alarm indication shall be demonstrated for each equipped fuse position. An already failed fuse compatible with the fuse position may be used.

(iv) Each alarm or signal circuit shall be checked for correct operation.

(v) A sufficient quantity of locally originating and incoming calls shall be made to demonstrate the function of the line concentrator including all equipped transmission paths. When intra-link calling is supplied, all intra-link transmission paths shall be demonstrated.

(7) *Acceptance tests and data required.* (i) Data shall be supplied to the owner by the bidder in writing as a part of the final documents in closing out the contract as follows:

(A) A detailed cross connect drawing of alarm to power board, central office battery to physical trunks or carrier system, wiring options used in terminals, channels, filters, repeaters, etc., marked in the owner's copy of the equipment manual or supplied separately;

(B) The measured central office supply voltages applied to the equipment terminals or repeaters at the time the jack and test point readings are made and ac supply voltages where equipment is powered from commercial ac sources;

(C) A list of all instruments, including accessories, by manufacturer and type number, used to obtain the data; and

(D) The measurements at all jack or test points recommended by the manufacturer, including carrier frequency level measurements at all carrier terminals and repeaters where utilized.

(ii) Data in the form of a checklist or other notations shall be supplied showing the results of the operational tests.

(iii) The bidder shall furnish to the owner a record of the battery cell or multicell unit voltages measured at the completion of the installation of the switching system before it is placed in commercial service. This is not required at a site where the owner furnishes dc power.

(8) *Joint inspection requirements.* (i) The bidder shall notify the owner in writing at least one week before the date the complete system will be ready for inspection and tests. A joint inspection shall be made by the bidder and the owner (or owner's engineer) to determine that the equipment installation is acceptable. The inspection shall include physical inspection, a review of acceptance test data, operational tests, and sample measurements.

(A) The owner shall review the acceptance test data and compare it to the requirements of this section.

(B) Sample measurements shall be made on all systems installed under this contract. Test methods should follow procedures described in paragraph (g)(5) of this section.

(C) A check shall be made of measured test point and jack readings for compliance with the manufacturer's specifications. This applies also to channels, terminals, carrier frequency repeaters, and fault locating circuits.

(ii) In the event that the measured data or operational tests show that equipment fails to meet the requirements of this section, the deficiencies are to be resolved as set forth in Article II of the 397 Special Equipment Contract. (Copies are available from RUS, room 0174, U.S. Department of Agriculture, Washington, DC 20250–1500.) The reports of the bidder and the owner shall be detailed as to deficiencies, causes, corrective action necessary, corrective action to be taken, completion time, etc.

(The information and recordkeeping requirements of this section have been approved by the Office of Management and Budget (OMB) under the control number 0572–0059.)

Appendix A to § 1755.397—Specification for Line Concentrator Detailed Equipment Requirements

(Information To Be Supplied by Owner)

Telephone Company (Owner)

Name: _____

Location: _____

Number of LC's Required: _____

Line Concentrator Locations:

Location	No. of Lines	Central Office
.....	.....	.....
.....	.....	.....
.....	.....	.....
.....	.....	.....

1. General

1.1 Notwithstanding the bidder's equipment lists, the equipment and materials furnished by the bidder must meet the requirements of paragraphs (a) through (p) of this section, and this appendix A.

1.2 Paragraph (a) through (p) of this section cover the minimum general requirements for line concentrator equipment.

1.3 Paragraph (q) of this section covers the requirements for installation, inspection and testing when such service is included as part of the contract.

1.4 This appendix A covers the technical data for application engineering and detailed equipment requirements insofar as they can be established by the owner. This appendix A shall be filled in by the owner.

1.5 Appendix B of this section covers detailed information on the line concentrator equipment, information on system reliability and traffic capacity as proposed by the bidder. Appendix B of this section is to be filled in by the bidder and must be presented with the bid.

Office Name

(By Location) _____

LC Designation _____

2. Number of Subscriber Lines

	Equipped	Wired only
Single-Party	.....	.....
Pay Station (Type:_____)	.....	.....
Other (Describe:_____)	.....	.....
Total	.....	.....

3. Loop Resistance

3.1 Number of non-pay station lines having a loop resistance, including the telephone set as follows:

3.1.1 For physical trunks between the remote and the office units, the loop resistance is to include the resistance of the trunk.

	No. of lines
1200–1900 ohms	.....
1901–3200 ohms	.....
3201–4500 ohms	.....

3.1.2 Number of pay station lines having a loop resistance, excluding the telephone set, greater than:

	No. of lines
1200 ohms (Prepay)	.....
1000 ohms (Semi-Postpay)	.....

When physical trunks are used, these resistances include that of the facility between the CO and the remote.

3.1.3 Range extension equipment, if required, is to be provided:

_____ By Bidder

_____ By Owner

(Quantity and Type) _____

_____

4. Traffic Data

4.1 Average combined originating and terminating hundred call seconds (CCS) per line in the busy hour:

_____ CCS/Line. (Assume originating & terminating equal.)

4.2 Percent Intra-Calling _____

4.3 Total Busy Hour Calls _____

5. TYPE or RINGING

5.1 Frequency No.	1.	2.	3.	4.
Frequency (Hz)	.....	.....	.....	.....
Max. No. of Phones/Freq.	.....	.....	.....	.....

5.2 Minimum ringing generator capacity to be supplied shall be sufficient to serve _____ lines (each frequency).

6. Central Office Equipment Interface

6.1 COE will be:

6.1.1 COE Manufacturer

_____

Type _____

Year _____

Generic _____

6.1.2 _____ See digital central office specification for the switchboard at _____ .

6.2 Interface will be:

6.2.1 _____ Line Circuit(s)

6.2.2 _____ Direct Digital Interface

6.2.3 _____ Other (Describe)

_____

_____

6.3 Mounting rack for line concentrator furnished by:

_____ Bidder

_____ Owner

(Specify width and height of rack available) (Width) (Height)

6.4 Equipment to be installed in existing building:

_____ Yes (Attach detailed plan)

_____ No

7. Transmission Facilities

7.1 Transmission facilities between the central office and remote terminals shall be:

7.1.1 Type:

_____ VF Carrier Derived Circuits

_____ Digital Span Line (DS1)

_____ Other

_____

(Attach a layout of the transmission facilities between the central office and the remote terminals describing transmission and signaling parameters, routing and resistance where applicable.)

7.1.2 Utilizes physical plant

_____ Cable Pairs (Existing/New)

_____ Other

_____

Note: Unless otherwise stated, physical plant will be supplied by the owner.

7.1.3 Terminal equipment for transmission facility to be supplied by:

_____ Owner

_____ Bidder

7.1.3.1 Carrier e/w voice terminations _____ Yes _____ No

Manufacturer and type _____

Central office voice terminations Equipped _____, Wired Only _____

7.1.3.2 Digital span line (DS1) supplied by

_____ Owner

_____ Bidder

Manufacturer and Type _____

7.1.3.3 Number of repeaters (per span line) _____

7.1.3.4 Diverse (alternate) span line routing required

_____ Yes (Describe in Item 11) _____ No

7.1.3.5 Span line terminations only _____ Yes _____ No

7.1.3.6 Span line power required (CO and Remote Terminals) _____ Yes _____ No

7.1.3.7 Physical facility between CO and remote Loop Resistance _____ ohms, Length _____ meters

8. Power Equipment Requirements

8.1 Central Office Terminal

8.1.1 Owner-furnished −48 volt dc power _____ Yes _____ No

8.1.2 Other (Describe)

_____

8.1.3 Standby power is available _____ Yes _____ No

8.2 Remote Terminal

8.2.1 Owner-furnished −48 vdc power _____ Yes _____ No

8.2.2 Bidder-furnished power supply _____ Yes _____ No

8.2.3 AC power available at site:

_____ 110 vac, 60 Hz, single-phase

_____ Other (Describe in Item 11)

8.2.4 A battery reserve of _____ busy hours shall be provided for this line concentrator terminal when it reaches _____ lines at the traffic rates specified.

8.2.5 Batteries supplied shall be:

_____ Lead Calcium

_____ Stabilized Electrolyte

_____ Sealed Lead Acid

_____ Other (Describe in item 11)

8.2.6 Standby power is available _____ Yes _____ No

9. Remote Terminal

9.1 Mounting

9.1.1 _____ Outside Housing (To be furnished by bidder)

9.1.2 _____ Concrete Slab to be furnished by owner (Bidder to supply construction details after award.)

9.1.3 _____ Manhole, environmentally controlled (Describe in Item 11)

9.1.4 _____ Pedestal Mounting

9.1.5 _____ Pole Mounting (Owner-furnished installed pole)

9.1.6 _____ Prefab Building (Owner-furnished site)

9.2 Equipment is to be installed in an existing building.

_____ Yes _____ No

(Attach detailed plan.)

9.3 Other (Describe)

_____

_____

10. Alternates

11. Explanatory Notes

Appendix B to § 1755.397—Specification for Line Concentrators Detailed Requirements; Bidder Supplied Information

Telephone Company (Owner)

Name: _____

Location: _____

Line Concentrator Equipment Locations

Central Office Terminal: _____

Remote Terminal: _____

1. General

1.1 The equipment and materials furnished by the bidder must meet the requirements of paragraphs (a) through (p) of this section.

1.2 Paragraph (a) through (p) of this section cover the minimum general requirements for line concentrator equipment.

1.3 Paragraph (q) of this section covers requirements for installation, inspection and testing when such service is included as part of the contract.

1.4 Appendix A of this section covers the technical data for application engineering and detailed equipment requirements insofar as they can be established by the owner. Appendix A of this section is to be filled in by the owner.

1.5 This appendix B covers detailed information on the line concentrator equipment, information as to system reliability and traffic capacity as proposed by the bidder. This appendix B shall be filled in by the bidder and must be presented with the bid.

2. Performance Objectives

2.1 Reliability (See paragraph (c) of this section)

_____

_____

_____

_____

2.2 Busy Hour Load Capacity and Traffic Delay (See Paragraph (g) of this section)

_____

_____

_____

3. Equipment Quantities Dependent on System Design

3.1 Transmission Facilities between the Central Office and Remote Terminals

Type	Quantity equipped	Quantity wired only
.....	.....	.....
.....	.....	.....
.....	.....	.....

4. Power Requirements

4.1 Central Office Terminal

Voltage _____

Current Drain (Amps) Normal _____, Peak _____

Fuse Qty _____, Size _____, Type _____

Heat Dissipation (BTU/Hr.) _____

_____

4.2 Remote Terminal

AC or DC _____

Voltage _____

Current Drain (Amps) Normal _____, Peak _____

Fuse Qty _____, Size _____, Type _____

Heat Dissipation (BTU/Hr.) _____

_____

Power required for heating or cooling equipment in remote bidder-furnished housing

_____

_____

5. Temperature and Humidity Limitations

5.1 Temperature

	Central office	Remote*
Maximum °F (°C)	.....	.....
Minimum °F (°C)	.....	.....

5.2 Relative Humidity

	Central office	Remote*
Maximum	.....	.....
Minimum	.....	.....

*Show conditions outside bidder-furnished housing.

6. Explanatory Notes

Dated: August 21, 1995.

Jill Long,

Under Secretary, Rural Economic and Community Development.

[FR Doc. 95–21298 Filed 8–28–95; 8:45 am]

BILLING CODE 3410–15–P

DEPARTMENT OF TRANSPORTATION

Federal Aviation Administration

14 CFR Part 25

[Docket No. NM–109; Special Conditions No. 25–NM–105]

Special Condition: Gulfstream Aerospace Corporation, Model Gulfstream V, High-Intensity Radiated Fields

AGENCY: Federal Aviation Administration, DOT.

ACTION: Final special conditions.

SUMMARY: These special conditions are for the Gulfstream Model Gulfstream V airplane. This new airplane will utilize new avionics/electronic systems that provide critical data to the flightcrew. The applicable regulations do not contain adequate or appropriate safety standards for the protection of these systems from the effects of high-intensity radiated fields. These special conditions contain the additional safety standards that the Administrator considers necessary to establish a level of safety equivalent to that established by the existing airworthiness standards.

EFFECTIVE DATE: September 28, 1995.

FOR FURTHER INFORMATION CONTACT: Gerald Lakin, FAA, Standardization Branch, ANM–113, Transport Airplane Directorate, Aircraft Certification Service, 1601 Lind Avenue SW., Renton, Washington 98055–4056, (206) 227–1187.

SUPPLEMENTARY INFORMATION:

Background

On February 26, 1992, Gulfstream Aerospace Corporation, P.O. Box 2206, Savannah, GA 31402–2206, applied for an amended type certificate in the transport airplane category for the Model Gulfstream V airplane. The Gulfstream V is a T-tail, low swept wing, business jet airplane powered by two Rolls-Royce BR710–48 turbofan engines mounted on pylons extending from the aft fuselage. Each engine will be capable of delivering 14,750 pounds thrust. The flight controls will be powered and capable of manual reversion. The airplane has a seating capacity of up to nineteen passengers, and a maximum takeoff weight of 89,000 pounds.

Type Certification Basis

Under the provisions of § 21.101 of the FAR, Gulfstream must show, except as provided in § 25.2, that the Model Gulfstream V meets the applicable provisions of part 25, effective February 1, 1965, as amended by Amendments 25–1 through 25–81. In addition, the proposed certification basis for the Model Gulfstream V includes part 34, effective September 10, 1990, plus any amendments in effect at the time of certification; and part 36, effective December 1, 1969, as amended by Amendment 36–1 through the amendment in effect at the time of certification. No exemptions are anticipated. These special conditions form an additional part of the type certification basis. In addition, the certification basis may include other special conditions that are not relevant to these special conditions.

If the Administrator finds that the applicable airworthiness regulations (i.e., part 25, as amended) do not contain adequate or appropriate safety standards for the Gulfstream V because of a novel or unusual design feature, special conditions are prescribed under the provisions of § 21.16 to establish a level of safety equivalent to that established in the regulations.

Special conditions, as appropriate, are issued in accordance with § 11.49 of the FAR after public notice, as required by §§ 11.28 and 11.29, and become part of the type certification basis in accordance with § 21.101(b)(2).

Special conditions are initially applicable to the model for which they are issued. Should the type certificate for that model be amended later to include any other model that incorporates the same novel or unusual design feature, or should any other model already included on the same type certificate be modified to incorporate the same novel or unusual design feature, the special conditions would also apply to the other model under the provisions of § 21.101(a)(1).

Novel or Unusual Design Features

The Model Gulfstream V incorporates new avionic/electronic installations, including a digital Electronic Flight Instrument System (EFIS), Air Data System, Attitude and Heading Reference System (AHRS), Navigation and Communication System, Autopilot System, and a Full Authority Digital Engine Control (FADEC) system that controls critical engine parameters. These systems may be vulnerable to high-intensity radiated fields (HIRF) external to the airplane.

Discussion

There is no specific regulation that addresses protection requirements for electrical and electronic systems from HIRF. Increased power levels from ground-based radio transmitters and the growing use of sensitive electrical and electronic systems to command and control airplanes have made it necessary to provide adequate protection.

To ensure that a level of safety is achieved equivalent to that intended by the regulations incorporated by reference, special conditions are issued for the Gulfstream V which require that new technology electrical and electronic systems, such as the EFIS, FADEC, AHRS, etc., be designed and installed to preclude component damage and interruption of function due to both the direct and indirect effects of HIRF.

High-Intensity Radiated Fields

With the trend toward increased power levels from ground-based transmitters, plus the advent of space and satellite communications, coupled with electronic command and control of the airplane, the immunity of critical digital avionics systems to HIRF must be established.

It is not possible to precisely define the HIRF to which the airplane will be exposed in service. There is also uncertainty concerning the effectiveness of airframe shielding for HIRF. Furthermore, coupling of electromagnetic energy to cockpit-installed equipment through the cockpit window apertures is undefined. Based on surveys and analysis of existing HIRF emitters, an adequate level of protection exists when compliance with the HIRF protection special condition is shown with either paragraph 1 or 2 below:

1. A minimum threat of 100 volts per meter peak electric field strength from 10 KHz to 18 GHz.

a. The threat must be applied to the system elements and their associated wiring harnesses without the benefit of airframe shielding.

b. Demonstration of this level of protection is established through system tests and analysis.

2. A threat external to the airframe of the following field strengths for the frequency ranges indicated.

Frequency	Peak (V/M)	Average (V/M)
10 KHz–100 KHz	50	50
100 KHz–500 KHz	60	60
500 KHz–2000 KHz	70	70
2 MHz–30 MHz	200	200
30 MHz–100 MHz	30	30
100 MHz–200 MHz	150	33
200 MHz–400 MHz	70	70
400 MHz–700 MHz	4,020	935
700 MHz–1000 MHz	1,700	170
1 GHz–2 GHz	5,000	990
2 GHz–4 GHz	6,680	840
4 GHz–6 GHz	6,850	310
6 GHz–8 GHz	3,600	670
8 GHz–12 GHz	3,500	1,270
12 GHz–18 GHz	3,500	360
18 GHz–40 GHz	2,100	750

As discussed above, these special conditions would be applicable initially to the Model Gulfstream V. Should Gulfstream apply at a later date for a change to the type certificate to include another model incorporating the same novel or unusual design feature, these special conditions would apply to that model as well, under the provisions of § 21.101(a)(1).

Discussion of Comments

Notice of Proposed Special Conditions No. SC 95–3–NM for the Gulfstream Aerospace Corporation, Model Gulfstream V, was published in the **Federal Register** on June 1, 1995 (60 FR 28550). One comment was received. The commenter states that the presently proposed certification basis for the Gulfstream V is part 25 of the FAR as amended by Amendments 25–1 through 25–81 instead of through 25–75 as stated in the notice. The FAA agrees with the commenter and has incorporated the change in this document.

Conclusion

This action affects certain design features only on the Gulfstream V airplane. It is not a rule of general applicability and affects only the manufacturer who applied to the FAA for approval of these features on the airplane.

List of Subjects in 14 CFR Part 25

Aircraft, Aviation safety, Federal Aviation Administration, Reporting and recordkeeping requirements.

The authority citation for these special conditions is as follows:

Authority: 49 U.S.C. app. 1344, 1348(c), 1352, 1354(a), 1355, 1421 through 1431, 1502, 1651(b)(2), 42 U.S.C. 1857f–10, 4321 et seq.; E.O. 11514, and 49 U.S.C. 106(g).

The Special Conditions

Accordingly, the following special conditions are issued as part of the type certification basis for the Gulfstream Aerospace Corporation Model Gulfstream V airplanes.

1. *Protection From Unwanted Effects of High-Intensity Radiated Fields (HIRF).* Each electrical and electronic system that performs critical functions must be designed and installed to ensure that the operation and operational capability of these systems to perform critical functions are not adversely affected when the airplane is exposed to high-intensity radiated fields.

2. For the purpose of these special conditions, the following definition applies: *Critical Functions.* Functions whose failure would contribute to or cause a failure condition that would prevent the continued safe flight and landing of the airplane.

Issued in Renton, Washington, on August 18, 1995.

Darrell M. Pederson,

Acting Manager, Transport Airplane Directorate, Aircraft Certification Service, ANM–100.

[FR Doc. 95–21333 Filed 8–28–95; 8:45 am]

BILLING CODE 4910–13–M

DEPARTMENT OF COMMERCE

National Institute of Standards and Technology

15 CFR Part 292

[Docket No. 950330085–5164–02]

RIN 0694–AB36

Manufacturing Extension Partnership; Infrastructure Development Projects

AGENCY: National Institute of Standards and Technology, Commerce.

ACTION: Final rule.

SUMMARY: The purpose of this rule is to provide for the introduction of effective training, tools, practices, techniques and analyses, and information systems into the national manufacturing extension system and to codify the process by which NIST will solicit and select applications for cooperative agreements and financial assistance on projects for providing improved training, tools, practices, techniques and analyses, and information systems to the national manufacturing extension system. The intended effect is to increase the effectiveness of the extension system by providing improved infrastructure capability to promote the competitiveness of smaller U.S. manufacturers.

EFFECTIVE DATE: August 29, 1995.

FOR FURTHER INFORMATION CONTACT: Kathryn Leedy, Manufacturing Extension Partnership Infrastructure Development Projects Manager, National Institute of Standards and Technology, Gaithersburg, MD 20899, telephone: 301–975–5020.

SUPPLEMENTARY INFORMATION: A proposed rule was published on May 15, 1995 (60FR25872) with a 30 day comment period. One respondent submitted three suggestions. The first comment proposed changing the proposed rule so that it could be used as a Broad Agency Announcement in addition to serving as a basis for solicitations in order to further accelerate the process of infrastructure development by providing a mechanism for inviting creative proposals. This idea was not accepted because structured solicitations are considered to be a better way to develop projects that meet program needs. Further, it is anticipated that frequent solicitations will be issued so that new directions can be taken and new needs met.

The second comment suggested that the selection criteria be removed from the rule or that they be designated the default criteria to be used unless other criteria are given in the solicitation. In response to this suggestion, Section 292.1(b) was modified to add the words ''as well as any further definition of the selection criteria'' to the information required in the announcements of solicitations.

The third comment proposed the use of a database of addresses for the distribution of draft rules and other materials. This comment was not accepted since it is an administrative suggestion and outside the scope of the rule.

The purpose of the National Institute of Standards and Technology Manufacturing Extension Partnership is to promote the competitiveness of smaller U.S. manufacturers. This is done primarily through technical assistance provided by a network of nonprofit manufacturing extension centers. The purpose of this rule is to provide for the development of infrastructure capability to effectively support the national manufacturing extension system and to codify the process by which NIST will solicit and select applications for financial assistance, typically for cooperative agreements, on projects which have the benefit of enhancing the ability of the extension system to promote the competitiveness of smaller U.S. manufacturers. Proposals from qualified organizations will periodically be solicited for projects which accomplish any one of the following objectives:

Development and Deployment of Training: To support the delivery of effective technical assistance to smaller manufacturers by trained service delivery personnel at the manufacturing extension centers. Specific categories of training and mechanisms of deployment may be specified in solicitations.

Development of Technical Assistance Tools, Practices, Techniques, and Analyses: To support the initial development, implementation, and analysis of tools, techniques, or practices which will aid manufacturing extension organizations in providing effective services to smaller manufacturers. Specific categories of tools, techniques, practices, or types of analysis may be specified in solicitations.

Information Infrastructure: To support and act as a catalyst for the development and implementation of information infrastructure services and pilots which will aid manufacturing extension organizations and smaller manufacturers in accessing the technical information they need or will accelerate the rate of adoption of electronic commerce. Specific industry sectors or subcategories of information infrastructure projects may be specified in solicitations.

In general, eligible applicants for these projects include all for-profit and nonprofit organizations including private companies, universities, community colleges, state governments, state technology programs, and independent nonprofit organizations. However, specific limitations on eligibility may be specified in solicitations.

Announcements of solicitations will be made in the Commerce Business Daily.

In accordance with the provisions of the National Institute of Standards and Technology Act (15 U.S.C. 272 (b)(1) and (c)(3) and 2781), as amended, NIST will provide assistance to the national manufacturing extension system. Under the NIST Manufacturing Extension Partnership (MEP), NIST will periodically make merit-based awards to develop and deploy infrastructure improvements into extension centers and to other organizations for the development and deployment of training, tools and techniques, and information infrastructure. MEP assumes a broad definition of manufacturing, and recognizes a wide range of technology and concepts, including durable goods production; chemical, biotechnology, and other materials processing; electronic component and system fabrication; and engineering services associated with manufacturing, as lying with the definition of manufacturing.

Classification

This rule relating to public property, loans, grants, benefits, or contracts is exempt from all requirements of section 553 of the Administrative Procedure Act (5 U.S.C. 553(a)(2)) including notice and opportunity for comment and delayed effective date. Therefore, a Regulatory Flexibility Analysis is not required and was not prepared for this rule for purposes of the Regulatory Flexibility Act (5 U.S.C. 603 and 604). The program is not a major Federal action requiring an environmental assessment under the National Environmental Policy Act. This rule does not contain policies with Federalism implications sufficient to warrant preparation of a Federalism assessment under Executive Order 12612. This rule contains collection of information requirements subject to the Paperwork Reduction Act which have been approved by the Office of Management and Budget (OMB Control Numbers 0693–0005, 0348–0043 and 0348–0044). Public reporting burden for this collection of information is estimated to average 40 hours per

response, including the time for reviewing instructions, searching existing data sources, gathering the data needed, and completing and reviewing the collection of information. Send comments regarding this burden estimate or any other aspect of this collection of information, including suggestions for reducing this burden, to the address shown above; and to the Office of Information and Regulatory Affairs, Office of Management and Budget, Washington, DC 20503.

It has been determined that this rule is not significant for purposes of EO 12866.

List of Subjects in 15 CFR Part 292

Grant programs—science and technology, Reporting and recordkeeping requirements, Science and technology, Technical assistance.

Dated: August 22, 1995.

Samuel Kramer,

Associate Director.

For the reasons set out in the preamble, 15 CFR Part 292 is added to read as follows:

PART 292—MANUFACTURING EXTENSION PARTNERSHIP; INFRASTRUCTURE DEVELOPMENT PROJECTS

Sec.
292.1 Program description.
292.2 Training development and deployment projects.
292.3 Technical tools, techniques, practices, and analyses projects.
292.4 Information infrastructure projects.
292.5 Proposal selection process.
292.6 Additional requirements.

Authority: 15 U.S.C. 272 (b)(1) and (c)(3) and 278l.

§ 292.1 Program description.

(a) *Purpose.* In accordance with the provisions of the National Institute of Standards and Technology Act (15 U.S.C. 272 (b)(1) and (c)(3) and 278l), as amended, NIST will provide financial assistance to develop the infrastructure of the national manufacturing extension system. Under the NIST Manufacturing Extension Partnership (MEP), NIST will periodically make merit-based awards to develop and deploy training capability and technical tools, techniques, practices, and analyses. In addition, NIST will develop and implement information infrastructure services and pilots. MEP assumes a broad definition of manufacturing, and recognizes a wide range of technology and concepts, including durable goods production; chemical, biotechnology, and other materials processing; electronic component and system fabrication; and engineering services associated with manufacturing, as lying within the definition of manufacturing.

(b) *Announcements of solicitations.* Announcements of solicitations will be made in the Commerce Business Daily. Specific information on the level of funding available and the deadline for proposals will be contained in that announcement. In addition, any specific industry sectors or types of tools and techniques to be focused on will be specified in the announcement, as well as any further definition of the selection criteria.

(c) *Proposal workshops.* Prior to an announcement of solicitation, NIST may announce opportunities for potential applicants to learn about these projects through workshops. The time and place of the workshop(s) will be contained in a Commerce Business Daily announcement.

(d) *Indirect costs.* The total dollar amount of the indirect costs proposed in an application under this program must not exceed the indirect cost rate negotiated and approved by a cognizant Federal agency prior to the proposed effective date of the award or 100 percent of the total proposed direct costs dollar amount in the application, whichever is less.

(e) *Proposal format.* The proposal must contain both technical and cost information. The proposal page count shall include every page, including pages that contain words, table of contents, executive summary, management information and qualifications, resumes, figures, tables, and pictures. All proposals shall be printed such that pages are single-sided, with no more than fifty-five (55) lines per page. Use 21.6×27.9 cm (8½″×11″) paper or A4 metric paper. Use an easy-to-read font of not more than about 5 characters per cm (fixed pitch font of 12 or fewer characters per inch or proportional font of point size 10 or larger). Smaller type may be used in figures and tables, but must be clearly legible. Margins on all sides (top, bottom, left and right) must be at lease 2.5 cm. (1″). Length limitations for proposals will be specified in solicitations. The applicant may submit a separately bound document of appendices, containing letters of support for the proposal. The proposal should be self-contained and not rely on the appendices for meeting criteria. Excess pages in the proposal will not be considered in the evaluation. Applicants must submit one signed original plus six copies of the proposal and Standard Form 424, 424A, and 424B (Rev 4/92), Standard Form LLL, and Form CD–511. Applicants for whom the submission of six copies presents financial hardship may submit one original and two copies of the application.

(f) *Content of proposal.* (1) The proposal must, at a minimum, include the following:

(i) An executive summary summarizing the planned project consistent with the Evaluation Criteria stated in this part.

(ii) A description of the planned project sufficient to permit evaluation of the proposal in accordance with the proposal Evaluation Criteria stated in this part.

(iii) A budget for the project which identifies all sources of funds and which breaks out planned expenditures by both activity and object class (e.g., personnel, travel, etc.).

(iv) A description of the qualifications of key personnel who will be assigned to work on the proposed project.

(v) A statement of work that discusses the specific tasks to be carried out, including a schedule of measurable events and milestones.

(vi) A completed Standard Form 424, 424A, and 424B (Rev 4–92) prescribed by the applicable OMB circular, Standard Form LLL, and Form CD–511, Certification Regarding Debarment, Suspension and Other Responsibility Matters; Drug-Free Workplace Requirements and Lobbying. SF–424, 424A, 424B (Rev 4–92), SF–LLL, and Form CD–511 will not be considered part of the page count of the proposal.

(2) The application requirements and the standard form requirements have been approved by OMB (OMB Control Number 0693–0005, 0348–0043 and 0348–0044).

(g) *Applicable federal and departmental guidance.* The Administrative Requirements, Cost Principles, and Audits are dependent upon type of Recipient organization as follows:

(1) *Nonprofit organizations.* (i) OMB Circular A–110—Uniform Administrative Requirements for Grants and Agreements with Institutions of Higher Education, Hospitals, and Other Nonprofit Organizations.

(ii) OMB Circular A–122—Cost Principles for Nonprofit Organizations.

(iii) 15 CFR Part 29b—Audit Requirements for Institutions of Higher Education and Other Nonprofit Organizations (implements OMB Circular A–133—Audits for Institutions of Higher Education and Other Nonprofit Organizations).

(2) *State/local governments.* (i) 15 CFR Part 24—Uniform Administrative Requirements for Grants and Cooperative Agreements to State and Local Governments.

(ii) OMB Circular A–87—Cost Principles for State and Local Governments.

(iii) 15 CFR Part 29a—Audit Requirements for State and Local Governments (implements OMB Circular A–128—Audit of State and Local Governments).

(3) *Educational institutions.* (i) OMB Circular A–110—Administrative Requirements for Grants and Agreements with Institutions of Higher Education, Hospitals, and Other Nonprofit Organizations.

(ii) OMB Circular A–21—Cost Principles for Educational Institutions.

(iii) 15 CFR Part 29b—Audit Requirements for Institutions of Higher Education and Other Nonprofit Organizations (implements OMB Circular A–133—Audits for Institutions of Higher Education and Other Nonprofit Organizations).

(4) *For-profit organizations.* (i) OMB Circular A–110—Administrative Requirements for Grants and Agreements with Institutions of Higher Education, Hospitals, and Other Nonprofit Organizations.

(ii) 48 CFR Part 31—Federal Acquisition Regulation, Contract Cost Principles and Procedures.

(iii) 15 CFR Part 29b—Audit Requirements for Institutions of Higher Education and Other Nonprofit Organizations (implements OMB Circular A–133).

(h) *Availability of forms and circulars.* (1) Copies of forms referenced in this part may be obtained from the Manufacturing Extension Partnership, National Institute of Standards and Technology, Room C121, Building 301, Gaithersburg, MD 20899.

(2) Copies of OMB Circulars may be obtained from the Office of Administration, Publications Office, 725 17th St., NW, Room 2200, New Executive Office Building, Washington, DC 20503.

§ 292.2 Training development and deployment projects.

(a) *Eligibility criteria.* In general, eligible applicants for these projects include all for-profit and nonprofit organizations including universities, community colleges, state governments, state technology programs and independent nonprofit organizations. However, specific limitations on eligibility may be specified in solicitations. Organizations may submit multiple proposals under this category in each solicitation for unique projects.

(b) *Project objective.* The purpose of these projects is to support the development and deployment of training programs which will aid manufacturing extension organizations in providing services to smaller manufacturers. While primarily directed toward the field agents/engineers of the extension organizations, the training may also be of direct use by the smaller manufacturers themselves. Specific industry sectors to be addressed and sub-categories of training may be specified in solicitations. Examples of training topic areas include, but are not limited to, manufacturing assessment functions, business systems management, quality assurance assistance, and financial management activities. Examples of training program deployment include, but are not limited to, organization and conduct of training courses, development and conduct of train-the-trainer courses, preparations and delivery of distance learning activities, and preparation of self-learning and technical-guideline materials. Projects must be completed within the scope of the effort proposed and should not require on-going federal support.

(c) *Award period.* Projects initiated under this category may be carried out over a period of up to three years. If an application is selected for funding, DOC has no obligation to provide any additional future funding in connection with that award. Renewal of an award to increase funding or extend the period of performance is at the total discretion of DOC.

(d) *Matching requirements.* Matching fund requirements for these proposals will be specified in solicitations including the breakdown of cash and in-kind requirements. For those projects not requiring matching funds, the presence of match will be considered in the evaluation under the Financial Plan criteria.

(e) *Training development and deployment projects evaluation criteria.* Proposals will be evaluated and rated on the basis of the following criteria listed in descending order of importance:

(1) *Demonstration that the proposed project will meet the training needs of technical assistance providers and manufacturers in the target population.* The target population must be clearly defined and the proposal must demonstrate that it understands the population's training needs within the proposed project area. The proposal should show that the efforts being proposed meet the needs identified. Factors that may be considered include: A clear definition of the target population, size and demographic distribution; demonstrated understanding of the target population's training needs; and appropriateness of the size of the target population and the anticipated impact for the proposed expenditure.

(2) *Development/deployment methodology and use of appropriate technology and information sources.* The proposal must describe the technical plan for the development or deployment of the training, including the project activities to be used in the training development/deployment and the sources of technology and/or information which will be used to create or deploy the training activity. Sources may include those internal to the proposer or from other organizations. Factors that may be considered include: Adequacy of the proposed technical plan; strength of core competency in the proposed area of activity; and demonstrated access to relevant technical or information sources external to the organization.

(3) *Delivery and implementation mechanisms.* The proposal must set forth clearly defined, effective mechanisms for delivery and/or implementation of proposed services to the target population. The proposal also must demonstrate that training activities will be integrated into and will be of service to the NIST Manufacturing Extension Centers. Factors that may be considered include: Ease of access to the training activity especially for MEP extension centers; methodology for disseminating or promoting involvement in the training especially within the MEP system; and demonstrated interest in the training activity especially by MEP extension centers.

(4) *Coordination with other relevant organizations.* Wherever possible the project should be coordinated with and leverage other organizations which are developing or have expertise with similar training. If no such organizations exist, the proposal should show that this is the case. Applicants will need to describe how they will coordinate to allow for increased economies of scale and to avoid duplication. Factors that may be considered include: Demonstrated understanding of existing organizations and resources relevant to the proposed project; adequate linkages and partnerships with existing organizations and clear definition of those organizations' roles in the proposed activities; and that the proposed activity does not duplicate existing services or resources.

(5) *Program evaluation.* The applicant should specify plans for evaluation of the effectiveness of the proposed training activity and for ensuring continuous improvement of the training. Factors that may be considered include: Thoroughness of evaluation plans,

including internal evaluation for management control, external evaluation for assessing outcomes of the activity, and ''customer satisfaction'' measures of performance.

(6) *Management and organizational experience and plans.* Applicants should specify plans for proper organization, staffing, and management of the implementation process. Factors that may be considered include: Appropriateness and authority of the governing or managing organization to conduct the proposed activities; qualifications of the project team and its leadership to conduct the proposed activity; soundness of any staffing plans, including recruitment, selection, training, and continuing professional development; and appropriateness of the organizational approach for carrying out the proposed activity.

(7) *Financial plan.* Applicants should show the relevance and cost effectiveness of the financial plan for meeting the objectives of the project; the firmness and level of the applicant's total financial support for the project; and a plan to maintain the program after the cooperative agreement has expired. Factors that may be considered include: Reasonableness of the budget, both in income and expenses; strength of commitment and amount of the proposer's cost share, if any; effectiveness of management plans for control of budget; appropriateness of matching contributions; and plan for maintaining the program after the cooperative agreement has expired.

§ 292.3 Technical tools, techniques, practices, and analyses projects.

(a) *Eligibility criteria.* In general, eligible applicants for these projects include all for profit and nonprofit organizations including universities, community colleges, state governments, state technology programs and independent nonprofit organizations. However, specific limitations on eligibility may be specified in solicitations. Organizations may submit multiple proposals under this category in each solicitation for unique projects.

(b) *Project objective.* The purpose of these projects is to support the initial development, implementation, and analysis of tools, techniques, and practices which will aid manufacturing extension organizations in providing services to smaller manufacturers and which may also be of direct use by the smaller manufacturers themselves. Specific industry sectors to be addressed and sub-categories of tools, techniques, practices, and analyses may be specified in solicitations. Examples of tools, techniques, and practices include, but are not limited to, manufacturing assessment tools, benchmarking tools, business systems management tools, quality assurance assistance tools, financial management tools, software tools, practices for partnering, techniques for urban or rural firms, and comparative analysis of assessment methods. Projects must be completed within the scope of the effort proposed and should not require on-going federal support.

(c) *Award period.* Projects initiated under this category may be carried out over a period of up to three years. If an application is selected for funding, DOC has no obligation to provide any additional future funding in connection with that award. Renewal of an award to increase funding or extend the period of performance is at the total discretion of DOC.

(d) *Matching requirements.* Matching fund requirements for these proposals will be specified in solicitations including the breakdown of cash and in-kind requirements. For those projects not requiring matching funds, the presence of match will be considered in the evaluation under the Financial Plan criteria.

(e) *Tools, techniques, practices, and analyses projects evaluation criteria.* Proposals from applicants will be evaluated and rated on the basis of the following criteria listed in descending order of importance:

(1) *Demonstration that the proposed project will meet the technical assistance needs of technical assistance providers and manufacturers in the target population.* Target population must be clearly defined. The proposal must demonstrate that it understands the population's tool or technique needs within the proposed project area. The proposal should show that the efforts being proposed meet the needs identified. Factors that may be considered include: A clear definition of the target population, size and demographic distribution; demonstrated understanding of the target population's tools or technique needs; and appropriateness of the size of the target population and the anticipated impact for the proposed expenditure.

(2) *Development methodology and use of appropriate technology and information sources.* The proposal must describe the technical plan for the development of the tool or resource, including the project activities to be used in the tool/resource development and the sources of technology and/or information which will be used to create the tool or resource. Sources may include those internal to the proposer or from other organizations. Factors that may be considered include: Adequacy of the proposed technical plan; strength of core competency in the proposed area of activity; and demonstrated access to relevant technical or information sources external to the organization.

(3) *Degree of integration with the manufacturing extension partnership.* The proposal must demonstrate that the tool or resource will be integrated into and will be of service to the NIST Manufacturing Extension Centers. Factors that may be considered include: Ability to access the tool or resource especially for MEP extension centers; methodology for disseminating or promoting use of the tool or technique especially within the MEP system; and demonstrated interest in using the tool or technique especially by MEP extension centers.

(4) *Coordination with other relevant organizations.* Wherever possible the project should be coordinated with and leverage other organizations which are developing or have expertise on similar tools, techniques, practices, or analyses. If no such organizations exist, the proposal should show that this is the case. Applicants will need to describe how they will coordinate to allow for increased economies of scale and to avoid duplication. Factors that may be considered include: Demonstrated understanding of existing organizations and resources relevant to the proposed project; adequate linkages and partnerships with existing organizations and clear definition of those organizations' roles in the proposed activities; and that the proposed activity does not duplicate existing services or resources.

(5) *Program evaluation.* The applicant should specify plans for evaluation of the effectiveness of the proposed tool or technique and for ensuring continuous improvement of the tool. Factors that may be considered include: Thoroughness of evaluation plans, including internal evaluation for management control, external evaluation for assessing outcomes of the activity, and ''customer satisfaction'' measures of performance.

(6) *Management experience and plans.* Applicants should specify plans for proper organization, staffing, and management of the implementation process. Factors that may be considered include: Appropriateness and authority of the governing or managing organization to conduct the proposed activities; qualifications of the project team and its leadership to conduct the proposed activity; soundness of any staffing plans, including recruitment, selection, training, and continuing professional development; and

appropriateness of the organizational approach for carrying out the proposed activity.

(7) *Financial plan.* Applicants should show the relevance and cost effectiveness of the financial plan for meeting the objectives of the project; the firmness and level of the applicant's total financial support for the project; and a plan to maintain the program after the cooperative agreement has expired. Factors that may be considered include: Reasonableness of the budget, both in income and expenses; strength of commitment and amount of the proposer's cost share, if any; effectiveness of management plans for control of budget; appropriateness of matching contributions; and plan for maintaining the program after the cooperative agreement has expired.

§ 292.4 Information infrastructure projects.

(a) *Eligibility criteria.* In general, eligible applicants for these projects include all for profit and nonprofit organizations including universities, community colleges, state governments, state technology programs and independent nonprofit organizations. However, specific limitations on eligibility may be specified in solicitations. Organizations may submit multiple proposals under this category in each solicitation for unique projects.

(b) *Project objective.* The purpose of these projects is to support and act as a catalyst for the development and implementation of information infrastructure services and pilots. These projects will aid manufacturing extension organizations and smaller manufacturers in accessing the technical information they need or will accelerate the rate of adoption of electronic commerce. Specific industry sectors to be addressed or subcategories of information infrastructure projects include, but are not limited to, pilot demonstration of electronic data interchange in a supplier chain, implementation of an electronic information service for field engineers at MEP extension centers, and industry specific electronic information services for MEP centers and smaller manufacturers.

(c) *Award period.* Projects initiated under this category may be carried out over a period of up to three years. If an application is selected for funding, DOC has no obligation to provide any additional future funding in connection with that award. Renewal of an award to increase funding or extend the period of performance is at the total discretion of DOC.

(d) *Matching requirements.* Matching fund requirements for these proposals will be specified in solicitations including the breakdown of cash and in-kind requirements. For those projects not requiring matching funds, the presence of match will be considered in the evaluation under the Financial Plan criteria.

(e) *Information infrastructure projects evaluation criteria.* Proposals from applicants will be evaluated and rated on the basis of the following criteria listed in descending order of importance:

(1) *Demonstration that the proposed project will meet the need of the target customer base.* The target customer base must be clearly defined and, in general, will be technical assistance providers and/or smaller manufacturers. The proposal should demonstrate a clear understanding of the customer base's needs within the proposed project area. The proposal should also show that the efforts being proposed meet the needs identified. Factors that may be considered include: A clear definition of the customer base, size and demographic distribution; demonstrated understanding of the customer base's needs within the project area; and appropriateness of the size of the customer base and the anticipated impact for the proposed expenditure.

(2) *Development plans and delivery/implementation mechanisms.* The proposal must set forth clearly defined, effective plans for the development, delivery and/or implementation of proposed services to the customer base. The proposal must delineate the sources of information which will be used to implement the project. Sources may include those internal to the center (including staff expertise) or from other organizations. Factors that may be considered include: Adequacy of plans; potential effectiveness and efficiency of proposed delivery and implementation systems; demonstrated capacity to form effective linkages; partnerships necessary for success of the proposed activity; strength of core competency in the proposed area of activity; and demonstrated access to relevant technical or information sources external to the organization.

(3) Coordination with other relevant organizations. Wherever possible the project should be coordinated with and leverage other organizations which are developing or have expertise within the project area. In addition, the project should demonstrate that it does not duplicate efforts which already are being performed by the private sector without government support. Applicants will need to describe how they will coordinate to allow for increased economies of scale and to avoid duplication. If the proposer will not be partnering with any other organizations, then the proposal should clearly explain why the project will be more successful if implemented as proposed. A proposal which makes a credible case for why there are no, or very limited, partnerships will not be penalized in evaluation. Factors that may be considered include: Demonstrated understanding of existing organizations and resources relevant to the proposed project; Adequate linkages and partnerships with relevant existing organizations; clear definition of the roles of partnering organizations in the proposed activities; and that the proposed activity does not duplicate existing services or resources.

(4) *Management and organizational experience and plans.* Applicants should specify plans for proper organization, staffing, and management of the project. Factors that may be considered include: Appropriateness and authority of the governing or managing organization to conduct the proposed activities; qualifications of the project team and its leadership to conduct the proposed activity; soundness of any staffing plans, including recruitment, selection, training, and continuing professional development; and appropriateness of the organizational approach for carrying out the proposed activity.

(5) *Financial plan.* Applicants should show the relevance and cost effectiveness of the financial plan for meeting the objectives of the project; the firmness and level of the applicant's total financial support for the project; and the ability of the project to continue after the cooperative agreement has expired without federal support. While projects that appear to require on-going public support will be considered, in general, they will be evaluated lower than those which show a strong ability to become self-sufficient. Factors that may be considered include: Reasonableness of the budget, both in income and expenses; strength of commitment and amount of the proposer's cost share, if any; effectiveness of management plans for control of budget; appropriateness of matching contributions; and plan for maintaining the program after the cooperative agreement has expired.

(6) *Evaluation.* The applicant should specify plans for evaluation of the effectiveness of the proposed project and for ensuring continuous improvement. Factors that may be considered include: Thoroughness of evaluation plans, including internal evaluation for management control, external evaluation for assessing

outcomes of the activity, and ''customer satisfaction'' measures of performance.

§ 292.5 Proposal selection process.

The proposal evaluation and selection process will consist of three principal phases: Proposal qualifications; proposal review and selection of finalists; and award determination as follows:

(a) *Proposal qualification.* All proposals will be reviewed by NIST to assure compliance with the proposal content and other basic provisions of this part. Proposals which satisfy these requirements will be designated qualified proposals; all others will be disqualified at this phase of the evaluation and selection process.

(b) *Proposal review and selection of finalists.* NIST will appoint an evaluation panel to review and evaluate all qualified proposals in accordance with the evaluation criteria and values set forth in this part. Evaluation panels will consist of NIST employees and in some cases other federal employees or non-federal experts who sign non-disclosure agreements. A site visit may be required to make full evaluation of a proposal. From the qualified proposals, a group of finalists will be numerically ranked and recommended for award based on this review.

(c) *Award determination.* The Director of the NIST, or her/his designee, shall select awardees based on total evaluation scores, geographic distribution, and the availability of funds. All three factors will be considered in making an award. Upon the final award decision, a notification will be made to each of the proposing organizations.

§ 292.6 Additional requirements.

Federal policies and procedures. Recipients and subrecipients are subject to all Federal laws and Federal and Department of Commerce policies, regulations, and procedures applicable to Federal financial assistance awards.

[FR Doc. 95–21253 Filed 8–28–95; 8:45 am]

BILLING CODE 3510–13–M

DEPARTMENT OF HEALTH AND HUMAN SERVICES

Food and Drug Administration

21 CFR Part 172

[Docket Nos. 89F–0400, 89F–0508, and 92F–0163]

Food Additives Permitted for Direct Addition to Food for Human Consumption; Sucrose Fatty Acid Esters

AGENCY: Food and Drug Administration, HHS.

ACTION: Final rule.

SUMMARY: The Food and Drug Administration (FDA) is amending the food additive regulations to provide for the safe use of sucrose fatty acid esters as emulsifiers, stabilizers, and texturizers in chewing gum, confections, and frostings; texturizers in surimi-based fabricated seafood products; and emulsifiers in coffee and tea beverages with added dairy ingredients and/or dairy product analogues. This action is in response to petitions filed by the Nebraska Department of Economic Development and Mitsubishi Kasei Corp.

DATES: Effective August 29, 1995; written objections and requests for a hearing by September 28, 1995.

ADDRESSES: Submit written objections to the Dockets Management Branch (HFA–305), Food and Drug Administration, rm. 1–23, 12420 Parklawn Dr., Rockville, MD 20857.

FOR FURTHER INFORMATION CONTACT:

Blondell Anderson, Center for Food Safety and Applied Nutrition (HFS–207), Food and Drug Administration, 200 C St. SW., Washington, DC 20204, 202–418–3106, or

Dennis M. Keefe, Center for Food Safety and Applied Nutrition (HFS–206), Food and Drug Administration, 200 C St. SW., Washington, DC 20204, 202–418–3102.

SUPPLEMENTARY INFORMATION: In notices published in the **Federal Registers** of October 24, 1989 (54 FR 43338), January 10, 1990 (55 FR 908), and May 13, 1992 (57 FR 20495), FDA announced that food additive petitions (FAP 9A4166, FAP 0A4183, and FAP 2A4321, respectively) had been filed by the Nebraska Department of Economic Development, 301 Centennial Mall South, Lincoln, NE 68509 (FAP 9A4166), and Mitsubishi Kasei Corp., 5–2, Marunouchi 2-Chome, Chiyoda-ku, Japan (FAP 0A4183 and FAP 2A4321), proposing that § 172.859 *Sucrose fatty acid esters* (21 CFR 172.859) be amended to provide for the safe use of sucrose fatty acid esters as emulsifiers, stabilizers, and texturizers in chewing gum, confections and frostings; as texturizers in surimi-based fabricated seafood products; and as emulsifiers in coffee and tea beverages.

FDA has evaluated data in these petitions and concludes from all the available data that there is a reasonable certainty that the proposed uses are safe. In reaching this conclusion, the agency has among other things, calculated the estimated daily intake from the proposed uses and all previously approved uses of sucrose fatty acid esters (Ref. 1). The agency has also calculated from toxicological information the acceptable daily intake level of sucrose fatty acid esters (Ref. 2). The agency finds that the estimated daily intake from the proposed uses and all approved uses is less than the estimated acceptable daily intake level. Thus, the agency concludes that the food additive regulations should be amended as set forth below.

In accordance with § 171.1(h) (21 CFR 171.1(h)), the petitions and the documents that FDA considered and relied upon in reaching its decision to approve the petitions are available for inspection at the Center for Food Safety and Applied Nutrition by appointment with one of the information contact persons listed above. As provided in 21 CFR 171.1(h), the agency will delete from the documents any materials that are not available for public disclosure before making the documents available for inspection.

The agency has carefully considered the potential environmental effects of this action. FDA has concluded that the action will not have a significant impact on the human environment, and that an environmental impact statement is not required. The agency's finding of no significant impact and the evidence supporting that finding, contained in an environmental assessment, may be seen in the Dockets Management Branch (address above) between 9 a.m. and 4 p.m., Monday through Friday.

Any person who will be adversely affected by this regulation may at any time on or before September 28, 1995, file with the Dockets Management Branch (address above) written objections thereto. Each objection shall be separately numbered, and each numbered objection shall specify with particularity the provisions of the regulation to which objection is made and the grounds for the objection. Each numbered objection on which a hearing is requested shall specifically so state.

Failure to request a hearing for any particular objection shall constitute a waiver of the right to a hearing on that objection. Each numbered objection for which a hearing is requested shall include a detailed description and analysis of the specific factual information intended to be presented in support of the objection in the event that a hearing is held. Failure to include such a description and analysis for any particular objection shall constitute a waiver of the right to a hearing on the objection. Three copies of all documents shall be submitted and shall be identified with the docket number found in brackets in the heading of this document. Any objections received in response to the regulation may be seen in the Dockets Management Branch between 9 a.m. and 4 p.m., Monday through Friday.

References

The following references have been placed on display in the Dockets Management Branch (address above) and may be seen by interested persons between 9 a.m. and 4 p.m., Monday through Friday.

1. DiNovi, M., Memorandum to L. Tarantino, May 23, 1995.
2. Bleiberg, M., Memorandum to B. Anderson et al., November 4, 1993.

List of Subjects in 21 CFR Part 172

Food additives, Reporting and recordkeeping requirements.

Therefore, under the Federal Food, Drug, and Cosmetic Act and under authority delegated to the Commissioner of Food and Drugs and redelegated to the Director of the Center for Food Safety and Applied Nutrition, 21 CFR part 172 is amended as follows:

PART 172—FOOD ADDITIVES PERMITTED FOR DIRECT ADDITION TO FOOD FOR HUMAN CONSUMPTION

1. The authority citation for 21 CFR part 172 continues to read as follows:

Authority: Secs. 201, 401, 402, 409, 701, 721 of the Federal Food, Drug, and Cosmetic Act (21 U.S.C. 321, 341, 342, 348, 371, 379e).

2. Section 172.859 is amended by revising paragraphs (c)(1) and (c)(2) to read as follows:

§ 172.859 Sucrose fatty acid esters.

* * * * *

(c) * * *

(1) As emulsifiers as defined in § 170.3(o)(8) of this chapter, or as stabilizers as defined in § 170.3(o)(28) of this chapter, in baked goods and baking mixes as defined in § 170.3(n)(1) of this chapter, in chewing gum as defined in § 170.3(n)(6) of this chapter, in coffee and tea beverages with added dairy ingredients and/or dairy product analogues, in confections and frostings as defined in § 170.3(n)(9) of this chapter, in dairy product analogues as defined in § 170.3(n)(10) of this chapter, in frozen dairy desserts and mixes as defined in § 170.3(n)(20) of this chapter, and in whipped milk products.

(2) As texturizers as defined in § 170.3(o)(32) of this chapter in biscuit mixes, in chewing gum as defined in § 170.3(n)(6) of this chapter, in confections and frostings as defined in § 170.3(n)(9) of this chapter, and in surimi-based fabricated seafood products.

* * * * *

Dated: August 8, 1995.

Fred R. Shank,

Director, Center for Food Safety and Applied Nutrition.

[FR Doc. 95–21378 Filed 8–28–95; 8:45 am]

BILLING CODE 4160–01–F

---

21 CFR Part 176

[Docket No. 93F–0335]

Indirect Food Additives; Paper and Paperboard Components

AGENCY: Food and Drug Administration, HHS.

ACTION: Final rule.

SUMMARY: The Food and Drug Administration (FDA) is amending the food additive regulations to provide for the safe use of ammonium zirconium lactate-citrate complexes for use as insolubilizers for clay coatings with protein binders in coatings for paper and paperboard intended for use in contact with food. This action is in response to a food additive petition filed by Sequa Chemicals, Inc.

DATES: Effective August 29, 1995; written objections and requests for a hearing by September 28, 1995.

ADDRESSES: Submit written objections to the Dockets Management Branch (HFA–305), Food and Drug Administration, rm. 1–23, 12420 Parklawn Dr., Rockville, MD 20857.

FOR FURTHER INFORMATION CONTACT: Daniel N. Harrison, Center for Food Safety and Applied Nutrition (HFS–216), Food and Drug Administration, 200 C St. SW., Washington, DC 20204, 202–418–3084.

SUPPLEMENTARY INFORMATION: In a notice published in the **Federal Register** of October 15, 1993 (58 FR 53518), FDA announced that a food additive petition (FAP 3B4386) had been filed by Sequa Chemicals, Inc., One Sequa Dr., Chester, SC 29706–0070. The petition proposed that the food additive regulations be amended to provide for the safe use of ammonium zirconium lactate-citrate complexes for use as insolubilizers for binders used in clay coatings for paper and paperboard intended for use in contact with food.

FDA has evaluated data in the petition and other relevant material. Based upon its review, the agency concludes that the use of ammonium zirconium lactate-citrate complexes should be limited to use as insolubilizers only for clay coatings with protein binders in coatings for paper and paperboard. The agency also concludes that, as so limited, the proposed food additive use is safe, and that § 176.170 *Components of paper and paperboard in contact with aqueous and fatty foods* (21 CFR 176.170) should be amended as set forth below.

In accordance with § 171.1(h) (21 CFR 171.1(h)), the petition and the documents that FDA considered and relied upon in reaching its decision to approve the petition are available for inspection at the Center for Food Safety and Applied Nutrition by appointment with the information contact person listed above. As provided in 21 CFR 171.1(h), the agency will delete from the documents any materials that are not available for public disclosure before making the documents available for inspection.

The agency has carefully considered the potential environmental effects of this action. FDA has concluded that the action will not have a significant impact on the human environment, and that an environmental impact statement is not required. The agency's finding of no significant impact and the evidence supporting that finding, contained in an environmental assessment, may be seen in the Dockets Management Branch (address above) between 9 a.m. and 4 p.m., Monday through Friday.

Any person who will be adversely affected by this regulation may at any time on or before September 28, 1995 file with the Dockets Management Branch (address above) written objections thereto. Each objection shall be separately numbered, and each numbered objection shall specify with particularity the provisions of the regulation to which objection is made and the grounds for the objection. Each numbered objection on which a hearing is requested shall specifically so state. Failure to request a hearing for any particular objection shall constitute a waiver of the right to a hearing on that objection. Each numbered objection for which a hearing is requested shall include a detailed description and

analysis of the specific factual information intended to be presented in support of the objection in the event that a hearing is held. Failure to include such a description and analysis for any particular objection shall constitute a waiver of the right to a hearing on the objection. Three copies of all documents shall be submitted and shall be identified with the docket number found in brackets in the heading of this document. Any objections received in response to the regulation may be seen in the Dockets Management Branch between 9 a.m. and 4 p.m., Monday through Friday.

List of Subjects in 21 CFR Part 176

Food additives, Food packaging.

Therefore, under the Federal Food, Drug, and Cosmetic Act and under authority delegated to the Commissioner of Food and Drugs and redelegated to the Director of the Center for Food Safety and Applied Nutrition, 21 CFR part 176 is amended as follows:

PART 176—INDIRECT FOOD ADDITIVES: PAPER AND PAPERBOARD COMPONENTS

1. The authority citation for 21 CFR part 176 continues to read as follows:

Authority: Secs. 201, 402, 406, 409, 721 of the Federal Food, Drug, and Cosmetic Act (21 U.S.C. 321, 342, 346, 348 379e).

2. Section 176.170 is amended in the table in paragraph (a)(5) by alphabetically adding a new entry under the headings ''List of substances'' and ''Limitations'' to read as follows:

§ 176.170 Components of paper and paperboard in contact with aqueous and fatty foods.

* * * * *

(a) * * *

(5) * * *

List of substances	Limitations
* * * * *	
Ammonium zirconium citrate (CAS Reg. No. 149564–62–5), ammonium zirconium lactate-citrate (CAS Reg. No. 149564–64–7), ammonium zirconium lactate (CAS Reg. No. 149564–63–6).	For use as insolubilizers only for clay coatings with protein binders in coatings for paper and paperboard, at a level not to exceed 1.4 percent by weight of coating solids.
* * * * *	

* * * * *

Dated: August 17, 1995.

Fred R. Shank,

Director, Center for Food Safety and Applied Nutrition.

[FR Doc. 95–21380 Filed 8–28–95; 8:45 am]

BILLING CODE 4160–01–F

---

21 CFR Part 178

[Docket No. 90F–0364]

Indirect Food Additives: Adjuvants, Production Aids, and Sanitizers

AGENCY: Food and Drug Administration, HHS.

ACTION: Final rule.

SUMMARY: The Food and Drug Administration (FDA) is amending the food additive regulations to provide for the safe use of *N*,*N*-bis(2-ethylhexyl)-*ar*-methyl-1*H*-benzotriazole-1-methanamine as a copper deactivator for lubricants with incidental food contact. This action is in response to a petition filed by Ciba-Geigy Corp.

DATES: Effective August 29, 1995; written objections and requests for a hearing by September 28, 1995.

ADDRESSES: Submit written objections to the Dockets Management Branch (HFA–305), Food and Drug Administration, rm. 1–23, 12420 Parklawn Dr., Rockville, MD 20857.

FOR FURTHER INFORMATION CONTACT: Vir D. Anand, Center for Food Safety and Applied Nutrition (HFS–216), Food and Drug Administration, 200 C St. SW., Washington, DC 20204, 202–418–3081.

SUPPLEMENTARY INFORMATION: In a notice published in the **Federal Register** of November 21, 1990 (55 FR 48693), FDA announced that a food additive petition (FAP 1B4233) had been filed by Ciba-Geigy Corp., Seven Skyline Dr., Hawthorne, NY 10532–2188, proposing that § 178.3570 *Lubricants with incidental food contact* (21 CFR 178.3570) be amended to provide for the safe use of *N*,*N*-bis(2-ethylhexyl)-*ar*-methyl-1*H*-benzotriazole-1-methanamine as a copper deactivator for lubricants with incidental food contact complying with 21 CFR 178.3570.

FDA has evaluated data in the petition and other relevant material. The agency concludes that the proposed use of the additive is safe and that the regulations in § 178.3570(a)(3) should be amended as set forth below.

FDA's review of the subject petition indicates that the additive may contain trace amounts of formaldehyde as an impurity. The potential carcinogenicity of formaldehyde was reviewed by the Cancer Assessment Committee (the Committee) of FDA's Center for Food Safety and Applied Nutrition. The Committee noted that for many years formaldehyde has been known to be a carcinogen by the inhalation route, but it concluded that these inhalation studies are not appropriate for assessing the potential carcinogenicity of formaldehyde in food. The Committee's conclusion was based on the fact that the route of administration (inhalation) is not relevant to the safety of formaldehyde residues in food and the fact that tumors were observed only locally at the portal of entry (nasal turbinates). In addition, the agency has received literature reports of two drinking water studies on formaldehyde: (1) A preliminary report of a carcinogenicity study purported to be positive by Soffritti et al. (1989), conducted in Bologna, Italy (Ref. 1); and (2) a negative study by Til et al. (1989), conducted in The Netherlands (Ref. 2). The Committee reviewed both studies and concluded, ''* * * that data concerning the Soffritti study reported were unreliable and could not be used in the assessment of the oral carcinogenicity of formaldehyde'' (Ref. 3). This conclusion is based on a lack of critical details in the study, questionable histopathologic conclusions, and the use of unusual nomenclature to describe the tumors. Based on the Committee's evaluation, the agency has determined that there is no basis to conclude that formaldehyde is a carcinogen when ingested.

In accordance with § 171.1(h) (21 CFR 171.1(h)), the petition and the documents that FDA considered and relied upon in reaching its decision to approve the petition are available for inspection at the Center for Food Safety and Applied Nutrition by appointment with the information contact person listed above. As provided in 21 CFR 171.1(h), the agency will delete from the documents any materials that are not available for public disclosure before making the documents available for inspection.

The agency has carefully considered the potential environmental effects of this action. FDA has concluded that the action will not have a significant impact on the human environment, and that an environmental impact statement is not required. The agency's finding of no significant impact and the evidence supporting that finding, contained in an environmental assessment, may be seen in the Dockets Management Branch (address above) between 9 a.m. and 4 p.m., Monday through Friday.

Any person who will be adversely affected by this regulation may at any time on or before September 28, 1995, file with the Dockets Management

Branch (address above) written objections thereto. Each objection shall be separately numbered, and each numbered objection shall specify with particularity the provisions of the regulation to which objection is made and the grounds for the objection. Each numbered objection on which a hearing is requested shall specifically so state. Failure to request a hearing for any particular objection shall constitute a waiver of the right to a hearing on that objection. Each numbered objection for which a hearing is requested shall include a detailed description and analysis of the specific factual information intended to be presented in support of the objection in the event that a hearing is held. Failure to include such a description and analysis for any particular objection shall constitute a waiver of the right to a hearing on the objection. Three copies of all documents shall be submitted and shall be identified with the docket number found in brackets in the heading of this document. Any objections received in response to the regulation may be seen in the Dockets Management Branch between 9 a.m. and 4 p.m., Monday through Friday.

References

The following references have been placed on display in the Dockets Management Branch (address above) and may be seen by interested persons between 9 a.m. and 4 p.m., Monday through Friday.

1. Soffritti, M., Maltoni, F. Maffei, and R. Biagi, ''Formaldehyde: An Experimental Multipotential Carcinogen,'' *Toxicology and Industrial Health*, Vol. 5, No. 5, pp. 699–730, 1989.

2. Til, H. P, R. A. Woutersen, V. J. Feron, V. H. M. Hollanders, H. E. Falke, and J. J. Clary, ''Two-Year Drinking Water Study of Formaldehyde in Rats,'' *Food Chemical Toxicology*, Vol. 27, No. 2, pp. 77–87, 1989.

3. Memorandum of conference concerning ''formaldehyde,'' meeting of the Cancer Assessment Committee, FDA, April 24, 1991, and March 4, 1993.

List of Subjects in 21 CFR Part 178

Food additives, Food packaging.

Therefore, under the Federal Food, Drug, and Cosmetic Act and under authority delegated to the Commissioner of Food and Drugs, 21 CFR part 178 is amended as follows:

PART 178—INDIRECT FOOD ADDITIVES: ADJUVANTS, PRODUCTION AIDS, AND SANITIZERS

1. The authority citation for 21 CFR part 178 continues to read as follows:

Authority: Secs. 201, 402, 409, 721 of the Federal Food, Drug, and Cosmetic Act (21 U.S.C. 321, 342, 348, 379e).

2. Section 178.3570 is amended in the table in paragraph (a)(3) by alphabetically adding a new entry under the headings ''Substances'' and ''Limitations'' to read as follows:

§ 178.3570 Lubricants with incidental food contact.

* * * * *

(a) * * *

(3) * * *

Substances	Limitations
* * *	* *
N,N-Bis(2-ethylhexyl)-*ar*-methyl-1*H*-benzotriazole-1-methanamine (CAS Reg. No. 94270–86–7).	For use as a copper deactivator at a level not to exceed 0.1 percent by weight of the lubricant.
* * *	* *

* * * * *

Dated: August 15, 1995.

William K. Hubbard,

Acting Deputy Commissioner for Policy.

[FR Doc. 95–21377 Filed 8–28–95; 8:45 am]

BILLING CODE 4160–01–F

DEPARTMENT OF THE TREASURY

Internal Revenue Service

26 CFR Part 40

[TD 8616]

RIN 1545–AT26

Deposits of Excise Taxes

AGENCY: Internal Revenue Service (IRS), Treasury.

ACTION: Temporary regulations.

SUMMARY: This document contains temporary regulations relating to deposits of excise taxes. These temporary regulations reflect changes to the law made by the Uruguay Round Agreements Act and affect persons required to make deposits of excise taxes. The text of these temporary regulations also serves as the text of the proposed regulations set forth in the notice of proposed rulemaking on this subject in the Proposed Rules section of this issue of the **Federal Register**.

EFFECTIVE DATE: These regulations are effective August 1, 1995.

FOR FURTHER INFORMATION CONTACT: Ruth Hoffman, (202) 622–3130 (not a toll-free number).

SUPPLEMENTARY INFORMATION:

Background

This document contains amendments to the Excise Tax Procedural Regulations (26 CFR part 40) relating to deposits of excise taxes. Effective January 1, 1995, the Uruguay Round Agreements Act of 1994 (the Act) amended sections 6302(e) and (f) (relating to deposits of excise taxes). As amended, these provisions require an additional deposit of all excise taxes except air transportation taxes in September of each year. Beginning in 1997, the amendments also apply to air transportation taxes. These temporary regulations provide safe harbor rules for that additional deposit of tax.

Under existing rules, deposits of excise taxes for a semimonthly period generally must equal the amount of tax liability incurred (or in the case of collected taxes, the amount of tax collected) during that semimonthly period unless a safe harbor applies. Sections 40.6302(c)–1(c) and 40.6302(c)–2(b) (2) and (3) provide two safe harbor rules for computing the amount of tax required to be deposited; the look-back quarter safe harbor rule and the current liability safe harbor rule.

These temporary regulations modify the safe harbor rules to reflect the amendments made by the Act.

Special Analyses

It has been determined that this Treasury decision is not a significant regulatory action as defined in EO 12866. Therefore, a regulatory assessment is not required. It also has been determined that section 553(b) of the Administrative Procedure Act (5 U.S.C. chapter 5) and the Regulatory Flexibility Act (5 U.S.C. chapter 6) do not apply to these regulations, and, therefore, a Regulatory Flexibility Analysis is not required. Pursuant to section 7805(f) of the Internal Revenue Code, these temporary regulations will be submitted to the Chief Counsel for Advocacy of the Small Business Administration for comment on their impact on small business.

Drafting Information: The principal author of these regulations is Ruth Hoffman, Office of Assistant Chief Counsel (Passthroughs and Special Industries). However, other personnel from the IRS and Treasury Department participated in their development.

List of Subjects in 26 CFR Part 40

Excise taxes, Reporting and recordkeeping requirements.

Adoption of Amendments to the Regulations

Accordingly, 26 CFR part 40 is amended as follows:

PART 40—EXCISE TAX PROCEDURAL REGULATIONS

Paragraph 1. The authority citation for part 40 continues to read in part as follows:

Authority: 26 U.S.C. 780 * * *

Par. 2. Section 40.6302(c)–5T is added to read as follows:

§ 40.6302(c)–5T Use of Government depositaries; rules under sections 6302(e) and (f) (temporary).

(a) *Applicability; meaning of terms.* This section sets forth rules relating to the excise tax deposits required under sections 6302(e)(2) and (f). Terms used both in this section and in any other provision of § 40.6302(c)–1, 40.6302(c)–2, 40.6302(c)–3, or 40.6302(c)–4 have the same meaning for purposes of this section as when used in such other provision.

(b) *Nine-day rule and 14-day rule taxes*—(1) *Deposits required.* In the case of deposits of 9-day rule taxes and 14-day rule taxes for the second semimonthly period in September, separate deposits are required for the period September 16th–26th and the period September 27th–30th.

(2) *Amount of deposit; in general.* Each deposit of a class of tax (that is, 9-day rule taxes or 14-day rule taxes) required under this paragraph (b) for the periods September 16th–26th and September 27th–30th must be not less than the amount of net tax liability incurred for the class of tax during the period. The net tax liability incurred for a class of tax during these periods may be computed by—

(i) Determining the amount of net tax liability reasonably expected to be incurred for the class of tax during the second semimonthly period in September;

(ii) Treating 11/15 (73.34 percent) of such amount as the net tax liability incurred during the period September 16th–26th; and

(iii) Treating the remainder of the amount determined under paragraph (b)(2)(i) of this section (adjusted to reflect net tax liability actually incurred through the end of September) as the net tax liability incurred during the period September 27th–30th.

(3) *Amount of deposit; safe harbor rules.* In the case of a class of tax for which an additional September deposit is required under this paragraph (b), the safe harbor rules of § 40.6302(c)–1(c) are modified as follows:

(i) *Safe harbor rule based on look-back quarter liability.* The safe harbor rule of § 40.6302(c)–1(c)(2)(i) does not apply for the third calendar quarter unless—

(A) The deposit of taxes in that class for the period September 16th–26th is not less than 11/90 (12.23 percent) of the net tax liability reported for the class of tax for the look-back quarter; and

(B) The total deposit of taxes in that class for the second semimonthly period in September is not less than 1/6 (16.67 percent) of the net tax liability reported for the class of tax for the look-back quarter.

(ii) *Safe harbor rule based on current liability.* The safe harbor rule of § 40.6302(c)–1(c)(3)(i) does not apply for the third calendar quarter unless—

(A) The deposit of taxes in that class for the period September 16th–26th is not less than 69.67 percent of the net tax liability for the class of tax for the second semimonthly period in September; and

(B) The total deposit of taxes in that class for the second semimonthly period in September is not less than 95 percent of the net tax liability for the class of tax for that semimonthly period.

(4) *Time to deposit.* The deposit required under this paragraph (b) for the period beginning September 16th must be made on or before September 29. The deposit required under this paragraph (b) for the period ending September 30th must be made at the time prescribed in § 40.6302(c)–1(b)(6)(i) (or, to the extent applicable, at the time prescribed in § 40.6302(c)–4(b)) for making deposits for the second semimonthly period in September.

(c) *30-day rule taxes*—(1) *Deposits required.* In the case of deposits of 30-day rule taxes for the first semimonthly period in September, separate deposits are required for the period September 1st–11th and the period September 12th–15th.

(2) Amount of deposit; in general. Each deposit of 30-day rule taxes required under this paragraph (c) for the periods September 1st–11th and September 12th–15th must be not less than the amount of net tax liability incurred for 30-day rule taxes during the period. The net tax liability incurred during these periods may be computed by—

(i) Determining the amount of net tax liability incurred during the first semimonthly period in September (or, if semimonthly liability is computed by dividing monthly liability by two, the amount reasonably expected to be incurred);

(ii) Treating 11/15 (73.34 percent) of such amount as the net tax liability incurred during the period September 1st–11th; and

(iii) Treating the remainder of the amount determined under paragraph (c)(2)(i) of this section (adjusted, if such amount is based on reasonable expectations, to reflect net tax liability actually incurred through the end of September) as the net tax liability incurred during the period September 12th–15th.

(3) *Amount of deposit; safe harbor rules.* In the case of 30-day rule taxes for which an additional September deposit is required under this paragraph (c), the safe harbor rules of § 40.6302(c)–2(b) are modified as follows:

(i) *Safe harbor rule based on look-back quarter liability.* The safe harbor rule of § 40.6302(c)–2(b)(2) does not apply for the third calendar quarter unless—

(A) The deposit of 30-day rule taxes for the period September 1st–11th is not less than 11/90 (12.23 percent) of the net tax liability reported for 30-day rule taxes for the look-back quarter; and

(B) The total deposit of 30-day rule taxes for the first semimonthly period in September is not less than 1/6 (16.67 percent) of the net tax liability reported for 30-day rule taxes for the look-back quarter.

(ii) *Safe harbor rule based on current liability.* The safe harbor rule of § 40.6302(c)–2(b)(3) does not apply for the third calendar quarter unless—

(A) The deposit of 30-day rule taxes for the period September 1st–11th is not less than 69.67 percent of the net tax liability for 30-day rule taxes for the first semimonthly period in September; and

(B) The total deposit of 30-day rule taxes for the first semimonthly period in September is not less than 95 percent of the net tax liability for 30-day rule taxes for that semimonthly period.

(4) Time to deposit. The deposit required under this paragraph (c) for the period beginning September 1st and the deposit of 30-day rule taxes for the second semimonthly period in August must be made on or before September 29. The deposit required under this paragraph (c) for the period ending September 15th must be made at the time prescribed in § 40.6302(c)–2(b)(1) for making deposits for the first semimonthly period in September.

(d) *Alternative method taxes*—(1) *Deposits required.* In the case of alternative method taxes charged (that is, included in amounts billed or tickets sold) during the first semimonthly period in September, separate deposits are required for the taxes charged during the period September 1st–11th and the period September 12th–15th.

(2) *Amount of deposit; in general.* Each deposit of alternative method taxes required under this paragraph (d) for the periods September 1st–11th and September 12th–15th must be not less than the amount of alternative method taxes charged during the period. The amount of alternative method taxes charged during these periods may be computed by—

(i) Determining the net amount of alternative method taxes reflected in the separate account for the first semimonthly period in September (or one-half of the net amount of alternative method taxes reasonably expected to be reflected in the separate account for the month of September);

(ii) Treating 11/15 (73.34 percent) of such amount as the amount charged during the period September 1st–11th; and

(iii) Treating the remainder of the amount determined under paragraph (d)(2)(i) of this section (adjusted, if such amount is based on reasonable expectations, to reflect actual charges through the end of September) as the amount charged during the period September 12th–15th.

(3) *Amount of deposit; safe harbor rules.* In the case of alternative method taxes for which an additional September deposit is required under this paragraph (d), the safe harbor rules of § 40.6302(c)–1(c) are modified as follows:

(i) Safe harbor rule based on look-back quarter liability. The safe harbor rule of § 40.6302(c)–1(c)(2)(i) does not apply for the fourth calendar quarter unless—

(A) The deposit for alternative method taxes charged during the period September 1st–11th is not less than 11/90 (12.23 percent) of the net tax liability reported for alternative method taxes for the look-back quarter; and

(B) The total deposit for alternative method taxes charged during the first semimonthly period in September is not less than 1/6 (16.67 percent) of the net tax liability reported for alternative method taxes for the look-back quarter.

(ii) *Safe harbor rule based on current liability.* The safe harbor rule of § 40.6302(c)–1(c)(3)(i) does not apply for the fourth calendar quarter unless—

(A) The deposit for alternative method taxes charged during the period September 1st–11th is not less than 69.67 percent of the alternative method taxes charged during the first semimonthly period in September; and

(B) The total deposit for alternative method taxes charged during the first semimonthly period in September is not less than 95 percent of the alternative method taxes charged during that semimonthly period.

(4) *Time to deposit.* The deposit required under this paragraph (d) for taxes charged during the period beginning September 1st must be made on or before September 29. The deposit of alternative method taxes required under this paragraph (d) for taxes charged during the period ending September 15th must be made at the time prescribed in § 40.6302(c)–3(c) for making deposits for the first semimonthly period in October.

(e) *Modifications for persons not required to use electronic funds transfer.* In the case of a person that is not required to deposit excise taxes by electronic funds transfer (a non-EFT depositor), the rules of paragraphs (b), (c), and (d) apply with the following modifications:

(1) The periods for which separate deposits must be made under paragraph (b) of this section are September 16th–25th and September 26th–30th. In addition, the deposit required for the period beginning September 16th must be made on or before September 28.

(2) The periods for which separate deposits must be made under paragraph (c) of this section are September 1st–10th and September 11th–15th. In addition, the deposit required for the period beginning September 1st and the deposit of 30-day rule taxes for the second semimonthly period in August must be made on or before September 28.

(3) The taxes for which separate deposits must be made under paragraph (d) of this section are those charged during the periods September 1st–10th and September 11th–15th. In addition, the deposit required for taxes charged during the period beginning September 1st must be made on or before September 28.

(4) The generally applicable fractions and percentages are modified to reflect the different deposit periods in accordance with the following table:

Generally applicable fractions and percentages	Modification for non-EFT depositors
11/15 (73.34 percent) .	10/15 (66.67 percent).
11/90 (12.23 percent) .	10/90 (11.12 percent).
69.67 percent	63.34 percent.

(f) *Due date on Saturday or Sunday*—(1) *EFT depositors.* A deposit that, under the rules of this section, would otherwise be due on September 29 must be made on or before September 28 if September 29 is a Saturday and on or before September 30 if September 29 is a Sunday.

(2) *Non-EFT depositors.* A deposit that, under the rules of this section, would otherwise be due on September 28 must be made on or before September 27 if September 28 is a Saturday and on or before September 29 if September 28 is a Sunday.

(g) *Special rules for section 4081 taxes superseded.* Deposits for the second semimonthly period in September of taxes imposed by section 4081 must be made under the rules of this section and without regard to the special rules for such deposits under § 40.6302(c)–1.

(h) *Effective date*—(1) *In general.* Except as provided in paragraph (h)(2) of this section, this section is effective August 1, 1995.

(2) *Air transportation taxes.* For air transportation taxes, this section is effective January 1, 1997.

Margaret Milner Richardson,

Commissioner of Internal Revenue.

Approved: August 3, 1995.

Leslie Samuels,

Assistant Secretary of the Treasury.

[FR Doc. 95–21438 Filed 8–28–95; 8:45 am]

BILLING CODE 4830–01–U

DEPARTMENT OF DEFENSE

Department of the Army

Corps of Engineers

33 CFR Part 322

Permits for Structures Located Within Shipping Safety Fairways

AGENCY: U.S. Army Corps of Engineers, DoD.

ACTION: Final rule.

SUMMARY: The Corps is changing its rules regarding permits for the placement of temporary anchors, cables and chains for floating or semisubmersible drilling rigs within shipping safety fairways. Shipping safety fairways and anchorages are established on the Outer Continental Shelf by the U.S. Coast Guard to provide unobstructed approaches for vessels using U.S. ports. This change arises as a result of requests by offshore oil companies for exemptions to the provisions of the existing rule because drilling and production technologies have greatly extended the range of deepwater drilling and the 120 day time limits placed on temporary structures allowed within fairway boundaries are no longer reasonable.

EFFECTIVE DATE: September 28, 1995.

FOR FURTHER INFORMATION CONTACT: Mr. Ralph T. Eppard at (202) 761–1783.

SUPPLEMENTARY INFORMATION: Department of the Army permits are required for the construction of any

structure in or over any navigable water of the United States pursuant to Section 10 of the Rivers and Harbors Act of 1899 (30 Stat. 1151; 33 U.S.C. 403). This authority was extended to artificial islands and fixed structures located on the Outer Continental Shelf (OCS) by Section 4(f) of the Outer Continental Shelf Lands Act of 1953 (67 Stat. 463; 43 U.S.C. 1333(e)).

Background

Pursuant to the cited authorities, the Corps promulgated regulations in 33 CFR 209.135 establishing shipping safety fairways in the Gulf of Mexico to provide obstruction-free routes for vessels in approaches to United States ports. The Corps provided these obstruction-free routes by denying permits for structures within certain designated lanes. In 1978, the Ports and Waterways Safety Act (PWSA), was amended to delegate authority to the Department of Transportation and the Commandant, U.S. Coast Guard to establish vessel routing measures, including fairways and fairway anchorages. In accordance with the PWSA, the Coast Guard completed the required studies and published final rules establishing shipping safety fairways on May 13, 1982. The Corps subsequently revoked its fairway regulations in Section 209.135(d) but retained paragraph (b), which contains the conditions under which the nationwide permit for oil exploration and production structures on the OCS (33 CFR 330.5(a)(8)), was issued. On November 13, 1986, the Corps fairway regulations were repromulgated in 33 CFR 322.5(l) to consolidate all permit regulations for structures in the same part.

When the regulations allowing temporary structures within fairways were promulgated by the Corps in 1981, deepwater drilling occurred in water depths of 300 to 600 feet. At that time the limitation of 120 days that temporary anchors would be allowed within fairways was considered reasonable. If the exploratory well was successful, a conventional fixed production platform would be used and there would be no further need to maintain the anchors within the fairway. Presently, according to offshore hydrocarbon exploration and production companies, technology has extended the range of deepwater drilling to water depths of 1,000 to 4,000 feet. As a result, drilling times have increased and production methods have changed. Accordingly, the limitation on the length of time (120 days), that an anchor is allowed within a fairway may not be appropriate, particularly in water depths in excess of 600 feet. The industry has available many types of production platforms, including floating production systems that are anchored in place during the productive life of the reserves and then moved to a new location. In water depths greater than 600 feet, the floating production platform becomes an important production option and in water depths greater than 1,000 feet these units are essential. In many instances, the only obstacle to using this type of system to drill and produce hydrocarbons is the location of a fairway. Current regulations require that the production system be placed at great distance from the fairway in order to keep the anchors clear of the fairway. The result is that there may be hydrocarbon bearing lease areas that cannot be effectively penetrated and produced. It should be noted that the requirement that the rig must be situated as necessary to insure that the minimum clearance over an anchor line within a fairway is 125 feet, is not changed by these amendments. In addition, these amendments are not intended to allow drilling structures within the fairways.

On July 7, 1994, we published an advance notice of proposed rulemaking in the **Federal Register**, soliciting comments on four separate options concerning this matter. On May 1, 1995, we published a notice of proposed rulemaking in the **Federal Register** soliciting public comment on the option which would remove the 120 day time restrictions when water depths exceed 600 feet. We received eight letters in support of the proposed change. We did not receive any objections to the proposed change. Two of the commenters requested that the words ''production facilities'' be added to clarify the rule. We agree with the addition of the production facilities as requested. The preamble to the advanced notice and the proposed rule referred to production platforms and production systems. As proposed, we are also amending the rules in 33 CFR 322.5(l) by removing the word ''temporary'', making it clear by restructuring the sentences that drilling rigs, including floating or semisubmersible drilling rigs, are not allowed within fairway boundaries and adding a sentence to subparagraph (i) to eliminate time restrictions on temporary and permanent anchors, attendant cable and chains within fairways when water depths exceed 600 feet. Such anchors, attendant cable and chains must be for floating or semisubmersible exploratory or production drilling rigs only. In areas where water depths are less than 600 feet, the time limit of 120 days continues to apply.

Regulatory Analyses and Notices

The Corps has determined in accordance with E.O. 12866 that this rule is not a major rule. It will not result in an annual effect on the economy of $100 million or more. There will be no major increase in costs or prices for consumers; individual industries, Federal, State or local Governments or geographic regions. It will not have a significant adverse effect on competition, employment, investment, productivity, or the ability of United States-based enterprises to compete with foreign-based enterprises in domestic or export markets. Pursuant to the Regulatory Flexibility Act, Pub. L. 96–354, I certify that this rule will not have a significant economic effect on a substantial number of small entities as the rule would remove a restriction allowing access to areas on the outer continental shelf previously unavailable.

List of Subjects in 33 CFR Part 322

Continental shelf, Electric power, Navigation, Water pollution control, Waterways.

In consideration of the above, the Corps of Engineers is amending Part 322 of Title 33, as follows:

PART 322—PERMITS FOR STRUCTURES OR WORK IN OR AFFECTING NAVIGABLE WATERS OF THE UNITED STATES

1. The authority citation for Part 322 continues to read as follows:

Authority: 33 U.S.C. 403.

2. Section 322.5 is amended by revising the introductory text of paragraph (l)(1), redesignating paragraphs (l)(1)(i) through (l)(1)(vi) as paragraphs (l)(1)(ii) through (l)(1)(vii) respectively, adding a new paragraph (l)(1)(i), and revising redesignated paragraph (l)(1)(ii) to read as follows:

§ 322.5 Special policies.

* * * * *

(l) Shipping safety fairways and anchorage areas.

* * * * *

(1) The Department of the Army will grant no permits for the erection of structures in areas designated as fairways, except that district engineers may permit anchors and attendant cables or chains for floating or semisubmersible drilling rigs to be placed within a fairway provided the following conditions are met:

(i) The purpose of such anchors and attendant cables or chains as used in

this section is to stabilize floating production facilities or semisubmersible drilling rigs which are located outside the boundaries of the fairway.

(ii) In water depths of 600 feet or less, the installation of anchors and attendant cables or chains within fairways must be temporary and shall be allowed to remain only 120 days. This period may be extended by the district engineer provided reasonable cause for such extension can be shown and the extension is otherwise justified. In water depths greater than 600 feet, time restrictions on anchors and attendant cables or chains located within a fairway, whether temporary or permanent, shall not apply.

* * * * *

Dated: August 15, 1995.

Stanley G. Genega,

Major General, U.S. Army, Director of Civil Works.

[FR Doc. 95–21112 Filed 8–28–95; 8:45 am]

BILLING CODE 3710–92–M

ENVIRONMENTAL PROTECTION AGENCY

40 CFR Parts 51 and 93

[FRL–5284–6]

RIN 2060–AF95

Transportation Conformity Rule Amendments: Authority for Transportation Conformity Nitrogen Oxides Waivers

AGENCY: Environmental Protection Agency (EPA).

ACTION: Interim final rule.

SUMMARY: In this document EPA amends the November 24, 1993, final transportation conformity rule to change the statutory authority for exempting certain areas from certain nitrogen oxides provisions of the transportation conformity rule. This change is necessary to implement the conformity rule in a legally correct manner and to allow EPA to approve nitrogen oxides exemptions for certain areas.

This interim final rule is effective immediately upon publication. However, EPA will also conduct full notice-and-comment rulemaking on EPA's interpretations regarding implementation of the provisions addressed in this interim final rule. A proposed rule that addresses this issue (among other things) is published in the proposed rule section of this **Federal Register**. Public comments will be addressed in a subsequent final rule.

EFFECTIVE DATE: This interim final rule is effective on August 29, 1995. Comments on this action must be received by September 28, 1995.

ADDRESSES: Interested parties may submit written comments (in duplicate, if possible) to: Air and Radiation Docket and Information Center, U.S. Environmental Protection Agency, Attention: Docket No. A–95–05, 401 M Street, S.W., Washington, DC 20460.

FOR FURTHER INFORMATION CONTACT: Kathryn Sargeant, Emission Control Strategies Branch, Emission Planning and Strategies Division, U.S. Environmental Protection Agency, 2565 Plymouth Road, Ann Arbor, MI 48105. (313) 668–4441.

SUPPLEMENTARY INFORMATION: This interim final rule changes the statutory authority for transportation conformity nitrogen oxides (NO_X) exemptions from Clean Air Act section 182(f) to section 182(b)(1), for areas subject to section 182(b)(1).

The provisions of this interim final rule shall apply immediately upon publication. However, EPA will also conduct full notice-and-comment rulemaking on EPA's interpretations regarding implementation of these provisions. A proposed rule that discusses these interpretations (among other things) is published in the proposed rule section of this **Federal Register**, and the public comment on this proposal will last until September 28, 1995. Public comments will be addressed in a subsequent final rule.

This portion of the proposal is being published as an interim final rule without benefit of a prior proposal and public comment period because EPA finds that ''good cause'' exists under the Administrative Procedures Act (''APA'') 5 U.S.C. 553(b)(B) for deferring those procedures until after publishing the change as an interim final rule. In changing the transportation conformity rule's reference from Clean Air Act section 182(f) to section 182(b)(1) as the statutory authority for waiving the requirement to control NO_X emissions in areas subject to section 182(b)(1), EPA finds that good cause exists for at least two reasons. First, it is contrary to the public interest in light of the clear statutory reference to section 182(b)(1) to continue offering such relief under the erroneous statutory reference in the transportation conformity rule. Section 176(c)(3)(A)(iii) of the Act's transportation conformity provisions explicitly states that, for ozone nonattainment areas to conform during the period before state implementation plans are approved by EPA, such areas must demonstrate that they are achieving reductions ''consistent with'' the NO_X (and volatile organic compounds) reduction requirements of section 182(b)(1). That section also provides for a waiver of the NO_X requirements if EPA determines that such reductions would not contribute to attainment in a particular area. Thus, given the clear intent of the statutory language, EPA believes it is unnecessary to undertake in advance full public rulemaking procedures when it is acting to correct an obvious error and, thereby, facilitate the lawful and effective implementation of section 176(c) of the Clean Air Act.

Second, in taking this action, EPA is responding to repeated public comments the Agency received in several individual NO_X exemption rulemaking actions. These comments pointed out that the correct statutory authority for relieving interim-period transportation conformity NO_X requirements is section 182(b)(1). Formal written requests have also been submitted to EPA requesting that this portion of the transportation conformity rule be revised so as to be consistent with the clear intent and language of the Act.

This interim final rule is taking effect immediately upon publication because, as described above, EPA believes it is contrary to public interest to continue acting in contravention of section 176(c)(3)(A)(iii)'s requirement to adhere to the procedures and requirements in section 182(b)(1) when considering the conformity status of transportation-related actions during the interim period. EPA therefore finds good cause to forego the 30-day period between publication and the effective date ordinarily applied under the APA, 5 U.S.C. 553(d), and make this interim final rule effective immediately for the same reasons described above in justification of taking final action without prior proposal.

List of Subjects

40 CFR Part 51

Environmental protection, Administrative practice and procedure, Carbon monoxide, Intergovernmental relations, Nitrogen dioxide, Ozone, Particulate matter, Reporting and recordkeeping requirements, Volatile organic compounds.

40 CFR Part 93

Administrative practice and procedure, Air pollution control, Carbon monoxide, Intergovernmental relations, Ozone.

Dated: August 17, 1995.

Carol M. Browner,

Administrator.

For the reasons set out in the preamble, 40 CFR parts 51 and 93 are proposed to be amended as follows:

PARTS 51 AND 93—[AMENDED]

1. The authority citation for parts 51 and 93 continues to read as follows:

Authority: 42 U.S.C. 7401–7671q.

2. The identical text of §§ 51.394 and 93.102 is amended by revising paragraph (b)(3)(i) to read as follows:

§ . Applicability.

* * * * *

(b) * * *

(3) * * *

(i) Volatile organic compounds and nitrogen oxides in ozone areas (unless the Administrator determines that additional reductions of NO_X would not contribute to attainment);

* * * * *

[FR Doc. 95–21404 Filed 8–28–95; 8:45 am]

BILLING CODE 6560–50–P

DEPARTMENT OF THE INTERIOR

Bureau of Land Management

43 CFR Public Land Order 7155

[CO–935–1430–01; COC–55885]

Withdrawal of National Forest System Land for Steamboat Ski Area; Colorado

AGENCY: Bureau of Land Management, Interior.

ACTION: Public land order.

SUMMARY: This order withdraws approximately 3,462 acres of National Forest System land from mining for 50 years to protect recreational resources and facilities at the Steamboat Ski Area. This land has been and will remain open to such forms of disposition as may by law be made of National Forest System land and to mineral leasing.

EFFECTIVE DATE: August 29, 1995.

FOR FURTHER INFORMATION CONTACT: Doris E. Chelius, BLM Colorado State Office, 2850 Youngfield Street, Lakewood, Colorado 80215–7076, 303–239–3706.

By virtue of the authority vested in the Secretary of the Interior by Section 204 of the Federal Land Policy and Management Act of 1976, 43 U.S.C. 1714 (1988), it is ordered as follows:

1. Subject to valid existing rights, the following described National Forest System land is hereby withdrawn from location and entry under the United States mining laws (30 U.S.C. Ch. 2 (1988)), for protection of facilities and resources at the Steamboat Ski Area:

Routt National Forest

A tract of land located in T. 5 N., R. 83 W., T. 5 N., R. 84 W., T. 6 N., R. 83 W., and T. 6 N., R. 84 W., all of the Sixth Principal Meridian, County of Routt, State of Colorado, described as follows:

Commencing at the Northwest Corner of Section 27, T. 6 N., R. 84 W., from which the W¼ Corner of said Section 27 bears S. 1°47′53″ W., thence N. 61°57′38″ E., 6089.67 ft. to the W¼ Corner of Section 23, T. 6 N., R. 84 W., and the

TRUE POINT OF BEGINNING;

Thence N. 89°59 E., 1014.00 ft.; N. 60°45′ E., 277.00 ft.; N. 44°20′ E., 550.00 ft.; N. 49°57′ E., 159.00 ft.; N. 66°00′ E., 1290.00 ft.; N. 38°41′24″ E., 331.44 ft.; N. 24°46′28″ E., 1031.96 ft.;

Thence Northeasterly, 1973.55 ft. along the arc of a curve concave to the Southeast to a point of compound curve, said arc having a radius of 3800.00 ft., a central angle of 29°45′25″ and being subtended by a chord that bears N. 69°07′18″ E., 1951.45 ft.;

Thence Easterly, 1393.30 ft. along the arc of said compound curve to a point of reverse curve, said arc having a radius of 3100.00 ft. a central angle of 25°45′06″ and being subtended by a chord that bears S. 83°07′27″ E., 1381.60 ft.;

Thence Southeasterly, 1085.30 ft. along the arc of said reverse curve to a second point of reverse curve, said arc having a radius of 7150.00 ft., a central angle of 8°41′49″ and being subtended by a chord that bears S. 74°35′49″ E., 1084.26 ft.;

Thence Southeasterly, 662.60 ft. along the arc of said second reverse curve, said arc having a radius of 2600.00 ft., a central angle of 14°3606 and being subtended by a chord that bears S. 71°38′40″ E., 660.81 ft.;

Thence S. 43°43′ E., 1205.00 ft.; Thence S. 55°56′ E., 2630.00 ft.;

Thence S. 35°36′ E., 1365.00 ft. to a point of curve to the right;

Thence Southeasterly, 1094.33 ft. along the arc of said curve, said arc having a radius of 4000.00 ft. a central angle of 15°40′30″ and being subtended by a chord that bears S. 27°45′45″ E., 1090.92 ft.;

Thence Southeasterly, 78.88 ft. along the arc of a curve concave to the Northeast, said arc having a radius of 720.00 feet, a central angle of 6°16′38″ and being subtended by a chord that bears S. 75°16′25″ E., 78.84 ft.;

Thence S. 65°04′29″ E., 1558.99 ft.;

Thence Southwesterly, 1666.96 ft. along the arc of a curve concave to the Southeast, said arc having a radius of 7540.00 ft., a central angle of 12°40′01″ and being subtended by a chord that bears S. 13°29′32″ W.,

1663.57 ft.;

Thence S. 00°39′36″ E., 3042.39 ft.;
S. 21°07′ W., 3426.85 ft.;
S. 05°14′ W., 237.64 ft.;
S. 16°08′ W., 179.00 ft.;
S. 36°34′ W., 316.00 ft.;
S. 38°55′ W., 1431.00 ft.;
S. 43°22′ W., 897.00 ft.;
S. 47°53′ W., 892.00 ft.;
N. 48°57′ W., 1082.00 ft.;
N. 65°35′ W., 462.00 ft.;
N. 74°21′ W., 347.00 ft.;
N. 62°14′ W., 631.00 ft.;
N. 54°58′ W., 102.31 ft.;
N. 76°27′ W., 2825.00 ft.;
N. 10°18′ W., 3487.67 ft.;
N. 32°08′ W., 620.24 ft.;
N. 27°15′ W., 441.00 ft.;
N. 20°44′ W., 616.00 ft.;
N. 10°26′ W., 816.00 ft.;
N. 15°35′ W., 217.69 ft.;
N. 84°53′ W., 444.72 ft.;
N. 74°48′ W., 350.00 ft.;
N. 77°28′ W., 1055.00 ft.;
N. 68°25′ W., 380.00 ft.;
N. 86°12′ W., 485.00 ft.;
S. 81°32′ W., 1035.00 ft.;
S. 70°51′ W., 172.08 ft.;

Thence N. 01°45′ E., 52.17 ft.; along the West line of the SW¼ of said sec. 26 to the W¼ Corner of said sec. 26;

Thence N. 01°43′ E., 2694.12 ft. along the West line of the NW¼ of said sec. 26 to the Northwest Corner thereof;

Thence N. 01°24′ E., 2578.62 feet along the West line of the SW¼ of said sec. 23 to the *TRUE POINT OF BEGINNING.* The area described contains approximately 3,462 acres of National Forest System Land in Routt County.

2. The withdrawal made by this order does not alter the applicability of those public land laws governing the use of National Forest System lands under lease, license, or permit, or governing the disposal of their mineral or vegetative resources other than under the mining laws.

3. This withdrawal will expire 50 years from the effective date of this order unless, as a result of a review conducted before the expiration date pursuant to Section 204(f) of the Federal Land Policy and Management Act of 1976, 43 U.S.C. 1714(f) (1988), the Secretary determines that the withdrawal shall be extended.

Dated: August 17, 1995.

Bob Armstrong,

Assistant Secretary of the Interior.

[FR Doc. 95–21318 Filed 8–28–95; 8:45 am]

BILLING CODE 4310–JB–P

43 CFR Public Land Order 7156

[CO–935–1430–01; COC–52453; COC–57004]

Withdrawal of National Forest System Lands for Protection of Ski Huts/Lodges; Colorado

AGENCY: Bureau of Land Management, Interior.

ACTION: Public land order.

SUMMARY: This order withdraws approximately 24.8 acres of National

Forest System lands for 20 years. This withdrawal will protect twelve constructed huts/lodges that are a part of a chain of overnight ski lodges between Leadville, Aspen, Dillon, and Vail, Colorado. These lands have been and will remain open to such forms of disposition as may by law be made of National Forest System lands and to mineral leasing.

EFFECTIVE DATE: August 29, 1995.

FOR FURTHER INFORMATION CONTACT: Doris E. Chelius, BLM Colorado State Office, 2850 Youngfield Street, Lakewood, Colorado 80215–7076, 303–239–3706.

By virtue of the authority vested in the Secretary of the Interior by Section 204 of the Federal Land Policy and Management Act of 1976, 43 U.S.C. 1714 (1988), it is ordered as follows:

1. Subject to valid existing rights, the following described National Forest System lands are hereby withdrawn from location and entry under the United States mining laws (30 U.S.C. Ch. 2 (1988)), for protection of constructed ski huts/lodges:

Each parcel of National Forest System land is occupied by a Hut/Lodge of the Tenth Mountain Trail System or the Summit Association System. The geographical position at the center of the Hut/Lodge facility at each site has been determined with a 2-channel, sequencing, code phase Global Positioning System, nonsurvey quality receiver. The position is based on North American Datum-1927 (NAD27). The dimensions and relationship of the boundaries of each parcel to the Hut/Lodge is identical:

Beginning at Corner No. 1, from which the northeast corner of the hut/lodge bears S. 45° W., 212.13 feet.

From Corner No. 1, by metes and bounds, W. 300 feet to corner No. 2; S. 300 feet to corner No. 3; E. 300 feet to corner No. 4; N. 300 feet to corner No. 1, the place of beginning.

Each parcel as described contains approximately 2.07 acres.

Sixth Principal Meridian

White River National Forest

Fowler Hilliard Hut/Lodge; At approximately Latitude 39°29′34.71″ N. and Longitude 106°17′21.42″ W. Said parcel lies in approximately SW¼SW¼ of section 25, T. 6 S., R. 80 W., (Unsurveyed).

Jackal Hut/Lodge (aka Schuss Zesiger); At approximately Latitude 39°26′18.10″ N. and Longitude 106°16′37.11″ W. Said parcel lies in approximately S½NE¼ and N½SW¼ of Section 13, T. 7 S., R. 80 W., (Unsurveyed).

Gates Hut/Lodge; At approximately Latitude 39°23′59.8″ N. and Longitude 106°38′54.1″ W. Said parcel lies in approximately SE¼NW¼ of section 34 T. 7 S., R. 83 W., (Unsurveyed).

Estin Hut/Lodge; At approximately Latitude 39°27′54.3″ N. and Longitude 106°38′56.0″ W. Said parcel lies in approximately NE¼ of section 3, T. 7 S., R. 83 W., (Unsurveyed).

Betty Bear Hut/Lodge; At approximately Latitude 39°15′22.18″ N. and Longitude 106°31′22.34″ W. Said parcel lies in approximately NE¼NW¼ of section 23, T. 9 S., R. 82 W., (Unsurveyed).

Margy's Hut/Lodge; At approximately Latitude 39°16′31.198″ N. and Longitude 106°42′46.214″ W. Said parcel lies in approximately SE¼SE¼SE¼ of section 12, T. 9 S., R. 84 W., (Unsurveyed).

McNamara Hut/Lodge; At approximately Latitude 39°13′59.10″ N. and Longitude 106°44′17.57″ W. Said parcel lies in approximately SW¼SE¼ of section 26, T. 9 S., R. 84 W., (Unsurveyed).

San Isabel National Forest

10th Mountain Division Hut/Lodge; At approximately Latitude 39°22′08.53″ N. and Longitude 106°23′10.84″ W. Said parcel lies in approximately NE¼NE¼ of section 12, T. 8 S., R. 81 W., (Unsurveyed).

Uncle Bud's Hut/Lodge; At approximately Latitude 39°18′05.26″ N. and Longitude 106°24′17.52″ W. Said parcel lies in approximately NE¼NE¼ of section 2, T. 9 S., R. 81 W., (Unsurveyed).

Skinner Hut/Lodge; At approximately Latitude 39°15′58.97″ N. and Longitude 106°27′45.97″ W. Said parcel lies in approximately NW¼NE¼SW¼ of section 17, T. 9 S., R. 81 W., (Unsurveyed).

Arapaho National Forest

Francie's Hut/Lodge; At approximately Latitude 39°26′18.79″ N. and Longitude 106°04′21.26″ W. Said parcel lies in approximately SE¼ of section 14, T. 7 S., R. 78 W., (Unsurveyed).

Janet's Hut/Lodge; At approximately Latitude 39°27′50.63″ N. and Longitude 106°13′46.63″ W. Said parcel lies in approximately SW¼SW¼ of section 4 and NW¼NW¼ of section 9, T. 7 S., R 79 W., (Unsurveyed).

The areas described aggregate approximately 24.8 acres of National Forest System lands in White River, Arapaho, and San Isabel National Forests in Lake, Pitkin, and Summit Counties.

2. The withdrawal made by this order does not alter the applicability of those public land laws governing the use of National Forest System lands under lease, license, or permit, or governing the disposal of their mineral or vegetative resources other than under the mining laws.

3. This withdrawal will expire 20 years from the effective date of this order unless, as a result of a review conducted before the expiration date pursuant to Section 204(f) of the Federal Land Policy and Management Act of 1976, 43 U.S.C. 1714(f) (1988), the Secretary determines that the withdrawal shall be extended.

Dated: August 17, 1995.

Bob Armstrong,

Assistant Secretary of the Interior.

[FR Doc. 95–21322 Filed 8–28–95; 8:45 am]

BILLING CODE 4310–JB–P

---

43 CFR Public Land Order 7158

[WY–930–1430–01; WYW–84553–03]

Modification of Executive Order No. 5327, Dated April 15, 1930; Wyoming

AGENCY: Bureau of Land Management, Interior.

ACTION: Public land order.

SUMMARY: This order modifies Executive Order No. 5327, in part, as to all public lands withdrawn as oil shale lands in Wyoming. This action will restore the public lands containing oil shale deposits to the operation of the public land laws as to conveyances pursuant to the Federal Land Policy and Management Act, 43 U.S.C. 1701 (1988), and the Recreation and Public Purposes Act, 43 U.S.C. 869 (1988); and will restore the deposits of oil shale and the public lands containing such deposits to the operation of the public land laws as to exchanges.

EFFECTIVE DATE: September 28, 1995.

FOR FURTHER INFORMATION CONTACT: Tamara Gertsch, BLM Wyoming State Office, P.O. Box 1828, Cheyenne, Wyoming 82003, 307–775–6115.

By virtue of the authority vested in the Secretary of the Interior by Section 204 of the Federal Land Policy and Management Act of 1976, 43 U.S.C. 1714 (1988), it is ordered as follows:

1. Executive Order No. 5327 of April 15, 1930, as amended, withdrawing oil shale deposits and lands containing such deposits for classification, is hereby modified to open the public lands containing oil shale deposits to the operation of the public land laws as to conveyances pursuant to the Federal Land Policy and Management Act, 43 U.S.C. 1701 (1988), and the Recreation and Public Purposes Act, 43 U.S.C. 869 (1988); and will open the deposits of oil shale and the public lands containing such deposits to the operation of the public land laws as to exchanges, insofar as it affects public lands in Wyoming.

2. At 9:00 a.m. on September 28, 1995, all public lands containing oil shale deposits in Wyoming currently withdrawn by Executive Order No. 5327, shall be open to the operation of the public land laws as to conveyances pursuant to the Federal Land Policy and

Management Act, 43 U.S.C. 1701 (1988), and the Recreation and Public Purposes Act, 43 U.S.C. 869 (1988); and the deposits of oil shale and the public lands containing such deposits shall be open to operation of the public land laws as to exchanges, subject to valid existing rights, the provisions of existing withdrawals, and the requirements of applicable law. All valid applications received at or prior to 9 a.m. on September 28, 1995, shall be considered as simultaneously filed at the that time. Those received thereafter shall be considered in the order of filing.

Dated: August 17, 1995.

Bob Armstrong,

Assistant Secretary of the Interior.

[FR Doc. 95–21370 Filed 8–28–95; 8:45 am]

BILLING CODE 4310–22–P

FEDERAL EMERGENCY MANAGEMENT AGENCY

44 CFR Part 65

Changes in Flood Elevation Determinations

AGENCY: Federal Emergency Management Agency (FEMA).

ACTION: Final rule.

SUMMARY: Modified base (1% annual chance) flood elevations are finalized for the communities listed below. These modified elevations will be used to calculate flood insurance premium rates for new buildings and their contents.

EFFECTIVE DATES: The effective dates for these modified base flood elevations are indicated on the following table and revise the Flood Insurance Rate Map(s) in effect for each listed community prior to this date.

ADDRESSES: The modified base flood elevations for each community are available for inspection at the office of the Chief Executive Officer of each community. The respective addresses are listed in the following table.

FOR FURTHER INFORMATION CONTACT: Michael K. Buckley, P.E., Chief Hazard Identification Branch, Mitigation Directorate, 500 C Street, SW, Washington, DC 20472, (202) 646–2756.

SUPPLEMENTARY INFORMATION: The Federal Emergency Management Agency makes the final determinations listed below of the final determinations of modified base flood elevations for each community listed. These modified elevations have been published in newspapers of local circulation and ninety (90) days have elapsed since that publication. The Associate Director has resolved any appeals resulting from this notification.

The modified base flood elevations are not listed for each community in this notice. However, this rule includes the address of the Chief Executive Officer of the community where the modified base flood elevation determinations are available for inspection.

The modifications are made pursuant to Section 206 of the Flood Disaster Protection Act of 1973, 42 U.S.C. 4105, and are in accordance with the National Flood Insurance Act of 1968, 42 U.S.C. 4001 et seq., and with 44 CFR Part 65.

For rating purposes, the currently effective community number is shown and must be used for all new policies and renewals.

The modified base flood elevations are the basis for the floodplain management measures that the community is required to either adopt or to show evidence of being already in effect in order to qualify or to remain qualified for participation in the National Flood Insurance Program (NFIP).

These modified elevations, together with the floodplain management criteria required by 44 CFR 60.3, are the minimum that are required. They should not be construed to mean that the community must change any existing ordinances that are more stringent in their floodplain management requirements. The community may at any time enact stricter requirements of its own, or pursuant to policies established by other Federal, State, or regional entities.

These modified elevations are used to meet the floodplain management requirements of the NFIP and are also used to calculate the appropriate flood insurance premium rates for new buildings built after these elevations are made final, and for the contents in these buildings.

The changes in base flood elevations are in accordance with 44 CFR 65.4.

National Environmental Policy Act

This rule is categorically excluded from the requirements of 44 CFR Part 10, Environmental Consideration. No environmental impact assessment has been prepared.

Regulatory Flexibility Act

The Associate Director, Mitigation Directorate, certifies that this rule is exempt from the requirements of the Regulatory Flexibility Act because modified base flood elevations are required by the Flood Disaster Protection Act of 1973, 42 U.S.C. 4105, and are required to maintain community eligibility in the NFIP. No regulatory flexibility analysis has been prepared.

Regulatory Classification

This final rule is not a significant regulatory action under the criteria of Section 3(f) of Executive Order 12866 of September 30, 1993, Regulatory Planning and Review, 58 FR 51735.

Executive Order 12612, Federalism

This rule involves no policies that have federalism implications under Executive Order 12612, Federalism, dated October 26, 1987.

Executive Order 12778, Civil Justice Reform

This rule meets the applicable standards of Section 2(b)(2) of Executive Order 12778.

List of Subjects in 44 CFR Part 65

Flood insurance, Floodplains, Reporting and recordkeeping requirements.

Accordingly, 44 CFR Part 65 is amended to read as follows:

PART 65—[AMENDED]

1. The authority citation for Part 65 continues to read as follows:

Authority: 42 U.S.C. 4001 et seq.; Reorganization Plan No. 3 of 1978, 3 CFR, 1978 Comp., p. 329; E.O. 12127, 44 FR 19367, 3 CFR, 1979 Comp., p. 376.

§ 65.4 [Amended]

2. The tables published under the authority of § 65.4 are amended as follows:

State and county	Location	Dates and name of newspaper where notice was published	Chief executive officer of community	Effective date of modification	Community No.
Arizona: Maricopa (FEMA Docket No. 7131).	City of Phoenix	Feb. 1, 1995, Feb. 8, 1995, *Phoenix Gazette.*	The Honorable Skip Rimsze, Mayor, City of Phoenix, 200 West Washington Street, 11th Floor, Phoenix, Arizona 85003.	Jan. 24, 1995	040051
California:					

State and county	Location	Dates and name of newspaper where notice was published	Chief executive officer of community	Effective date of modification	Community No.
Contra Costa (FEMA Docket No. 7133).	Unincorporated Areas.	Feb. 23, 1995, Mar. 2, 1995, *Contra Costa Times*.	The Honorable Gayle Bishop, Chairperson, Contra Costa County Board of Supervisors, 651 Pine Street, Martinez, California 94553.	Jan. 27, 1995	060025
San Diego (FEMA Docket No. 7133).	City of Escondido	Mar. 1, 1995, Mar. 8, 1995, *Times Advocate*.	The Honorable Sid Hollins, Mayor, City of Escondido, 201 North Broadway, Escondido, California 92025.	Feb. 9, 1995	060290
Contra Costa (FEMA Docket No. 7133).	City of Lafayette	Feb. 23, 1995, Mar. 2, 1995, *Contra Costa Times*.	The Honorable Gayle Uilkema, Mayor, City of Lafayette, P.O. Box 1968, Lafayette, California 94549.	Jan. 27, 1995	065037
Merced (FEMA Docket No. 7133).	City of Merced	Mar. 1, 1995, Mar. 8, 1995, *Merced Sun Star*.	The Honorable Richard Bernasconi, Mayor, City of Merced, City Hall, 678 West 18th Street, Merced, California 95340.	Feb. 19, 1995	060191
Merced (FEMA Docket No. 7133).	Unincorporated Areas.	Mar. 1, 1995, Mar. 8, 1995, *Merced Sun Star*.	Mr. Clark Channing, County Administrator, Merced County, 2222 M Street, Merced, California 95340.	Feb. 10, 1995	060188
Ventura (FEMA Docket No. 7131).	City of Moorpark	Jan. 20, 1995, Jan. 27, 1995, *Star Free Press*.	The Honorable Paul W. Lawrason, Mayor, City of Moorpark, 799 Moorpark Avenue, Moorpark, California 93021.	Dec. 28, 1994	060712
Ventura (FEMA Docket No. 7131).	Unincorporated Areas.	Jan. 20, 1995, Jan. 27, 1995, *Star Free Press*.	The Honorable Susan K. Lacey, Chairperson, Ventura County Board of Supervisors, 800 South Victoria Avenue, Ventura, California 93009.	Dec. 28, 1994	060413
Contra Costa (FEMA Docket No. 7133).	City of Walnut Creek	Feb. 23, 1995, Mar. 2, 1995, *Contra Costa Times*.	The Honorable Ed Dimmick, Mayor, City of Walnut Creek, 1666 North Main Street, Walnut Creek, California 94596.	Jan. 27, 1995	065070
Iowa: Story (FEMA Docket No. 7133).	City of Ames	Feb. 21, 1995, Feb. 28, 1995, *Daily Tribune*.	The Honorable Larry R. Curtis, Mayor, City of Ames, P.O. Box 811, Ames, Iowa 50010.	Feb. 8, 1995	190254
Kansas:					
Coffey (FEMA Docket No. 7133).	City of Burlington	Feb. 1, 1995, Feb. 8, 1995, *Coffey County Today*.	The Honorable Rocky L. Alford, Mayor, City of Burlington, P.O. Box 207, Burlington, Kansas 66839.	Jan. 6, 1995	200063
Sedgwick (FEMA Docket No. 7133).	Unincorporated Areas.	Mar. 16, 1995, Mar. 23, 1995, *Wichita Eagle*.	The Honorable Mark F. Schroeder, Chairman, Sedgwick County Board of Commissioners, 525 North Main Street, Wichita, Kansas 67203.	Feb. 17, 1995	200321
Sedgwick (FEMA Docket No. 7133).	City of Wichita	Mar. 16, 1995, Mar. 23, 1995, *Wichita Eagle*.	The Honorable Elma Broadfoot, Mayor, City of Wichita, City Hall, First Floor, 455 North Main Street, Wichita, Kansas 67202.	Feb. 17, 1995	200328
Maryland: Montgomery (FEMA Docket No. 7133).	City of Gaithersburg	Feb. 1, 1995, Feb. 8, 1995, *Gaithersburg Gazette*.	The Honorable W. Edward Bohrer, Jr., Mayor, City of Gaithersburg, 31 South Summit Avenue, Gaithersburg, Maryland 20877–2098.	Jan. 13, 1995	240050
Missouri:					
Pemiscot (FEMA Docket No. 7133).	City of Hayti	Feb. 16, 1995, Feb. 23, 1995, *Democrat Argus*.	The Honorable Herbert DeWeese, Mayor, City of Hayti, P.O. Box X, Hayti, Missouri 63851.	Jan. 31, 1995	290276
Pemiscott (FEMA Docket No. 7131).	City of Hayti Heights	Jan. 26, 1995, Feb. 2, 1995, *Democrat Argus*.	The Honorable David R. Humes, Mayor, City of Hayti Heights, P.O. Box 426, Hayti, Missouri 63851.	Jan. 6, 1995	290277
Nebraska:					
Lancaster (FEMA Docket No. 7131).	City of Lincoln	Jan. 18, 1995, Jan. 25, 1995, *Lincoln Journal—Star*.	The Honorable Mike Johanns, Mayor, City of Lincoln, 555 South Tenth Street, Lincoln, Nebraska 68508.	Dec. 29, 1994	315273

State and county	Location	Dates and name of newspaper where notice was published	Chief executive officer of community	Effective date of modification	Community No.
Lancaster (FEMA Docket No. 7131).	City of Lincoln	Jan. 19, 1995, Jan. 26, 1995, *Lincoln Journal—Star*.	The Honorable Mike Johanns, Mayor, City of Lincoln, 555 South Tenth Street, Lincoln, Nebraska 68508.	Dec. 30, 1994	315273
Cheyenne (FEMA Docket No. 7131).	City of Sidney	Feb. 16, 1995, Feb. 23, 1995, *Sidney Telegraph*.	The Honorable E.C. Petroff, Mayor, City of Sydney, P.O. Box 79, Sidney, Nebraska 69162.	Jan. 24, 1995	310039
New Mexico:					
Bernalillo (FEMA Docket No. 7133).	Unincorporated Areas.	Feb. 15, 1995, Feb. 22, 1995, *Albuquerque Tribune*.	The Honorable Eugene M. Gilbert, Chairman, Bernalillo County Board of Commissioners, One Civic Plaza, NW, Albuquerque, New Mexico 87102.	Jan. 26, 1995	350001
Texas:					
Dallas and Denton (FEMA Docket No. 7133).	City of Coppell	Feb. 17, 1995, Feb. 24, 1995, *Citizen Advocate*.	The Honorable Tom Morton, Mayor, City of Coppell, 255 Parkway Boulevard, Coppell, Texas 75019.	Jan. 25, 1995	480170
Dallas, Denton, Collin, Rockwall, and Kaufman (FEMA Docket No. 7131).	City of Dallas	Jan. 13, 1995, Jan. 20, 1995, *Daily Commercial Record*.	The Honorable Steve Bartlett, Mayor, City of Dallas, City Hall, 1500 Marilla Street, Room 5E North, Dallas, Texas 75201.	Dec. 15, 1994	480171
Dallas, Denton, Collin, Rockwall, and Kaufman (FEMA Docket No. 7133).	City of Dallas	Feb. 24, 1995, Mar. 3, 1995, *Daily Commercial Record*.	The Honorable Steve Bartlett, Mayor, City of Dallas, City Hall, 1500 Marilla Street, Room 5E North, Dallas, Texas 75201.	Feb. 6, 1995	480171
Dallas, Denton, Collin, Rockwall, and Kaufman (FEMA Docket No. 7139).	City of Dallas	Mar. 15, 1995, Mar. 22, 1995, *Daily Commercial Record*.	The Honorable Steve Bartlett, Mayor, City of Dallas, City Hall, 1500 Marilla Street, Room 5E North, Dallas, Texas 75201.	Mar. 1, 1995	480171
Tarrant (FEMA Docket No. 7133).	City of Euless	Mar. 2, 1995, Mar. 9, 1995, *Mid Cities News*.	The Honorable Mary Lib Faleh, Mayor, City of Euless, 201 North Ector Drive, Euless, Texas 76039–3595.	Feb. 14, 1995	480593
Gillespie (FEMA Docket No. 7133).	City of Fredericksburg.	Feb. 15, 1995, Feb. 22, 1995, *Fredericksburg Standard*.	The Honorable Linda Langerhans, Mayor, City of Fredericksburg, P.O. Box 111, Fredericksburg, Texas 78624.	Feb. 7, 1995	480252
Collin (FEMA Docket No. 7133).	City of Plano	Feb. 15, 1995, Feb. 22, 1995, *The Dallas Morning News*.	The Honorable James N. Muns, Mayor, City of Plano, P.O. Box 860358, Plano, Texas 75086–0358.	Sep. 15, 1994	480140
Utah: Salt Lake (FEMA Docket No. 7131).	City of Murray	Feb. 23, 1995, Mar. 2, 1995, *Murray Eagle*.	The Honorable Lynn Pett, Mayor, City of Murray, 5025 South State Street, Murray, Utah 84107.	Jan. 26, 1995	490103

(Catalog of Federal Domestic Assistance No. 83.100, ''Flood Insurance.'')

Dated: August 22, 1995.

Richard T. Moore,

Associate Director for Mitigation.

[FR Doc. 95–21396 Filed 8–28–95; 8:45 am]

BILLING CODE 6718–03–M

44 CFR Part 65

[Docket No. FEMA–7147]

Changes in Flood Elevation Determinations

AGENCY: Federal Emergency Management Agency (FEMA).

ACTION: Interim rule.

SUMMARY: This interim rule lists communities where modification of the base (1% annual chance) flood elevations is appropriate because of new scientific or technical data. New flood insurance premium rates will be calculated from the modified base flood elevations for new buildings and their contents.

DATES: These modified base flood elevations are currently in effect on the dates listed in the table and revise the Flood Insurance Rate Map(s) in effect prior to this determination for each listed community.

From the date of the second publication of these changes in a newspaper of local circulation, any person has ninety (90) days in which to

request through the community that the Associate Director, Mitigation Directorate, reconsider the changes. The modified elevations may be changed during the 90-day period.

ADDRESSES: The modified base flood elevations for each community are available for inspection at the office of the Chief Executive Officer of each community. The respective addresses are listed in the following table.

FOR FURTHER INFORMATION CONTACT: Michael K. Buckley, P.E., Chief, Hazard Identification Branch, Mitigation Directorate, 500 C Street, SW, Washington, DC 20472, (202) 646–2756.

SUPPLEMENTARY INFORMATION: The modified base flood elevations are not listed for each community in this interim rule. However, the address of the Chief Executive Officer of the community where the modified base flood elevation determinations are available for inspection is provided.

Any request for reconsideration must be based upon knowledge of changed conditions, or upon new scientific or technical data.

The modifications are made pursuant to Section 201 of the Flood Disaster Protection Act of 1973, 42 U.S.C. 4105, and are in accordance with the National Flood Insurance Act of 1968, 42 U.S.C. 4001 et seq., and with 44 CFR Part 65.

For rating purposes, the currently effective community number is shown and must be sued for all new policies and renewals.

The modified base flood elevations are the basis for the floodplain management measures that the community is required to either adopt or to show evidence of being already in effect in order to qualify or to remain qualified for participation in the National Flood Insurance Program (NFIP).

These modified elevations, together with the floodplain management criteria required by 44 CFR 60.3, are the minimum that are required. They should not be construed to mean that the community must change any existing ordinances that are more stringent in their floodplain management requirements. The community may at any time enact stricter requirements of its own, or pursuant to policies established by other Federal, State, or regional entities.

The changes in base flood elevations are in accordance with 44 CFR 65.4.

National Environmental Policy Act

This rule is categorically excluded from the requirements of 44 CFR Part 10, Environmental Consideration. No environmental impact assessment has been prepared.

Regulatory Flexibility Act

The Associate Director, Mitigation Directorate, certifies that this rule is exempt from the requirements of the Regulatory Flexibility Act because modified base flood elevations are required by the Flood Disaster Protection Act of 1973, 42 U.S.C. 4105, and are required to maintain community eligibility in the NFIP. No regulatory flexibility analysis has been prepared.

Regulatory Classification

This interim rule is not a significant regulatory action under the criteria of Section 3(f) of Executive Order 12866 of September 30, 1993, Regulatory Planning and Review, 58 FR 51735.

Executive Order 12612, Federalism

This rule involves no policies that have federalism implications under Executive Order 12612, Federalism, dated October 26, 1987.

Executive Order 12778, Civil Justice Reform

This rule meets the applicable standards of Section 2(b)(2) of Executive Order 12778.

List of Subjects in 44 CFR Part 65

Flood insurance, Floodplains, Reporting and recordkeeping requirements.

Accordingly, 44 CFR Part 65 is amended to read as follows:

PART 65—[AMENDED]

1. The authority citation for Part 65 continues to read as follows:

Authority: 42 U.S.C. 4001 et seq.; Reorganization Plan No. 3 of 1978, 3 CFR, 1978 Comp., p. 329; E.O. 12127, 44 FR 19367, 3 CFR, 1979 Comp., p. 376.

§ 65.4 [Amended]

2. The tables published under the authority of § 65.4 are amended as follows:

State and county	Location	Dates and name of newspaper where notice was published	Chief executive officer of community	Effective date of modification	Community No.
Arizona:					
Maricopa	City of Phoenix	June 22, 1995, June 29, 1995, *Arizona Republic.*	The Honorable Skip Rimsza, Mayor, City of Phoenix, 200 West Washington Street, 11th Floor, Phoenix, Arizona 85003–1611.	May 26, 1995	040051
Maricopa	City of Scottsdale	June 1, 1995, June 8, 1995, *Scottsdale Progress.*	The Honorable Herbert Drinkwater, Mayor, City of Scottsdale, P.O. Box 1000, Scottsdale, Arizona 85252–1000.	May 5, 1995	045012
California:					
Solano	City of Fairfield	June 7, 1995, June 14, 1995, *Daily Republic.*	The Honorable Chuck Hammond, Mayor, City of Fairfield, 1000 Webster Street, Fairfield, California 94533–4833.	May 18, 1995	060370
Contra Costa	City of Hercules	June 1, 1995, June 8, 1995, *West County Times.*	The Honorable Beth Barkey, Mayor, City of Hercules, 111 Civic Center Drive, Hercules, California 94547.	May 16, 1995	060434
Los Angeles	Unincorporated Areas.	June 1, 1995, June 8, 1995, *Daily Commerce.*	The Honorable Yvonne Brath Waite Burke, Chairperson, Los Angeles County Board of Supervisors, 500 West Temple Street, Suite 822, Los Angeles, California 90012.	May 8, 1995	065043

State and county	Location	Dates and name of newspaper where notice was published	Chief executive officer of community	Effective date of modification	Community No.
Riverside	Unincorporated Areas.	June 1, 1995, June 8, 1995, *Press Enterprise*.	The Honorable Kay Ceniceros, Chairperson, Riverside County Board of Supervisors, P.O. Box 1359, Riverside, California 92502–1359.	May 16, 1995	060245
Solano	Unincorporated Areas.	June 7, 1995, June 14, 1995, *Daily Republic*.	The Honorable Barbara Kondylis, Chairperson, Solano County Board of Supervisors, 580 Texas Street, Fairfield, California 94533–6378.	May 18, 1995	060631
Colorado:					
Boulder	City of Boulder	June 23, 1995, June 30, 1995, *Daily Camera*.	The Honorable Leslie Durgin, Mayor, City of Boulder, P.O. Box 791, Boulder, Colorado 80306.	June 5, 1995	080024
Boulder	Unincorporated Areas.	June 15, 1995, June 22, 1995, *Daily Camera*.	The Honorable Homer Page, Chairperson, Boulder County Board of Commissioners, P.O. Box 471, Boulder, Colorado 80306.	May 22, 1995	080023
Missouri: Boone	City of Columbia	June 22, 1995, June 29, 1995, *Columbia Missourian*.	The Honorable Mary Anne McCollum, Mayor, City of Columbia, P.O. Box N, Columbia, Missouri 65205.	June 6, 1995	290036
Texas:					
Collin	Unincorporated Areas.	June 14, 1995, June 21, 1995, *Plano Star Courier*.	The Honorable Ron Harris, Collin County Judge, 210 South McDonald Street, McKinney, Texas 75069.	May 30, 1995	480130
Denton	City of Denton	June 22, 1995, June 29, 1995, *Denton Record Chroncile*.	The Honorable Bob Castlebury, Mayor, City of Denton, 215 East McKinney, Denton, Texas 76201.	May 31, 1995	480194
Collin	City of Plano	June 14, 1995, June 21, 1995, *Plano Star Courier*.	The Honorable James N. Muns, Mayor, City of Plano, P.O. Box 860358, Plano, Texas 75086–0358.	May 30, 1995	480140

(Catalog of Federal Domestic Assistance No. 83.100, ''Flood Insurance.'')

Dated: August 22, 1995.

Richard T. Moore,

Associate Director for Mitigation.

[FR Doc. 95–21399 Filed 8–28–95; 8:45 am]

BILLING CODE 6718–03–M

44 CFR Part 67

Final Flood Elevation Determinations

AGENCY: Federal Emergency Management Agency (FEMA).

ACTION: Final rule.

SUMMARY: Base (1% annual chance) flood elevations and modified base flood elevations are made final for the communities listed below. The base flood elevations and modified base flood elevations are the basis for the floodplain management measures that each community is required either to adopt or to show evidence of being already in effect in order to qualify or remain qualified for participation in the National Flood Insurance Program (NFIP).

EFFECTIVE DATES: The date of issuance of the Flood Insurance Rate Map (FIRM) showing base flood elevations and modified base flood elevations for each community. This date may be obtained by contacting the office where the FIRM is available for inspection as indicated on the table below.

ADDRESSES: The final base flood elevations for each community are available for inspection at the office of the Chief Executive Officer of each community. The respective addresses are listed in the table below.

FOR FURTHER INFORMATION CONTACT: Michael K. Buckley, P.E., Chief, Hazard Identification Branch, Mitigation Directorate, 500 C Street, SW., Washington, DC 20472, (202) 646–2756.

SUPPLEMENTARY INFORMATION: The Federal Emergency Management Agency makes final determinations listed below of base flood elevations and modified base flood elevations for each community listed. The proposed base flood elevations and proposed modified base flood elevations were published in newspapers of local circulation and an opportunity for the community or individuals to appeal the proposed determinations to or through the community was provided for a period of ninety (90) days. The proposed based flood elevations and proposed modified base flood elevations were also published in the **Federal Register**.

This final rule is issued in accordance with Section 110 of the Flood Disaster Protection Act of 1973, 42 U.S.C. 4104, and 44 CFR Part 67.

FEMA has developed criteria for floodplain management in floodprone areas in accordance with 44 CFR Part 60.

Interested lessees and owners of real property are encouraged to review the proof Flood Insurance Study and FIRM available at the address cited below for each community.

The base flood elevations and modified base flood elevations are made final in the communities listed below. Elevations at selected locations in each community are shown.

National Environmental Policy Act

This rule is categorically excluded from the requirements of 44 CFR Part 10, Environmental Consideration. No environmental impact assessment has been prepared.

Regulatory Flexibility Act

The Associate Director, Mitigation Directorate, certifies that this rule is exempt from the requirements of the Regulatory Flexibility Act because final or modified base flood elevations are required by the Flood Disaster Protection Act of 1973, 42 U.S.C. 4104, and are required to establish and maintain community eligibility in the NFIP. No regulatory flexibility analysis has been prepared.

Regulatory Classification

This final rule is not a significant regulatory action under the criteria of Section 3(f) of Executive Order 12866 of September 30, 1993, Regulatory Planning and Review, 58 FR 51735.

Executive Order 12612, Federalism

This rule involves no policies that have federalism implications under Executive Order 12612, Federalism, dated October 26, 1987.

Executive Order 12778, Civil Justice Reform

This rule meets the applicable standards of Section 2(b)(2) of Executive Order 12778.

List of Subjects in 44 CFR Part 67

Administrative practice and procedure, Flood insurance, Reporting and recordkeeping requirements.

Accordingly, 44 CFR Part 67 is amended to read as follows:

PART 67—[AMENDED]

1. The authority citation for Part 67 continues to read as follows:

Authority: 42 U.S.C. 4001 et seq.; Reorganization Plan No. 3 of 1978, 3 CFR, 1978 Comp., p. 329; E.O. 12127, 44 FR 19367, 3 CFR, 1979 Comp., p. 376.

§ 67.11 [Amended]

2. The tables published under the authority of § 67.11 are amended as follows:

Source of flooding and location	# Depth in feet above ground. *Elevation in feet (NGVD)
KANSAS	
Independence (City), Montgomery County (FEMA Docket No. 7134)	
Elk River:	
Approximately 3,340 feet upstream of U.S. Highway 75/Kansas State Highway 96 ...	*765
Approximately 5,080 feet upstream of U.S. Highway 75/Kansas State Highway 96 ...	*765
Maps are available for inspection at City Hall, 120 North Sixth Street, Independence, Kansas.	
LOUISIANA	
Colfax (Town), Grant Parish (FEMA Docket No. 7132)	
Sugarhouse Bayou:	
At downstream corporate limits, approximately 2,200 feet downstream of State Highway 8	*92
At north corporate limits, approximately 2,200 feet upstream of Fraenzie Road	*93
Maps are available for inspection at Town Hall, Town of Colfax, 1208 Main Street, Colfax, Louisiana.	
Grant Parish (Unincorporated Areas) (FEMA Docket No. 7132)	
Bayou Rigolette:	
At confluence with Walden Bayou	*87
Approximately 3,800 feet upstream of Parish Road 118 ..	*88
Approximately 900 feet upstream of State Highway 492	*89
Approximately 1,800 feet upstream of U.S. Highway 71 ..	*90
Just upstream of State Highway 3169	*92
Sugarhouse Bayou:	
Approximately 4,600 feet upstream of confluence with Bayou Rigolette	*92
At confluence of Valentine Bayou	*93
Bayou Grappe:	
Approximately 3,500 feet downstream of Richardson Road	*93
Just upstream of Richardson Road	*94
Just upstream of U.S. Highway 71	*96
At confluence of Corfeine Bayou	*97
Corfeine Bayou:	
Just downstream of U.S. Highway 71	*97
Flagon Bayou:	
At the Grant Parish-Rapides Parish line, approximately 9,300 feet downstream of Flagon Creek Road	*151
Just downstream of Flagon Creek Road	*159
Just upstream of Airpark Road	*175
At State Highway 8	*201
Clear Creek:	
Approximately 17,600 feet upstream of confluence with Little River	*61
Approximately 1,000 feet downstream of Walker Ferry Road	*85
Just downstream of Clear Creek Road	*108
Just downstream of U.S. Highway 165	*160
Maps are available for inspection at Grant Parish Tax Office, Court House Building, 200 Main Street, Colfax, Louisiana.	
New Roads (Town), Pointe Coupee Parish (FEMA Docket No. 7132)	
Portage Canal:	
Approximately 2,100 feet downstream of Hospital Road	*26
At Missouri Pacific Railroad Bridge	*27
At State Highway 1 and 10	*27
Maps are available for inspection at City Hall, 211 West Main Street, New Roads, Louisiana.	
Pointe Coupee Parish (Unincorporated areas) (FEMA Docket No. 7132)	
Portage Canal:	
Approximately 6,500 feet downstream of Louisiana Highway 10	*27
Just downstream of Louisiana Highway 10	*27
Maps are available for inspection at 160 East Main Street, New Roads, Louisiana.	
NEVADA	
Elko (City) Elko County (FEMA Docket No. 7132)	
Humboldt River:	
Approximately 1,350 feet upstream of truss bridge at corporate limits	*5,048
At confluence with 22 East Drainage (levee failed)	*5,054

Source of flooding and location	# Depth in feet above ground. *Elevation in feet (NGVD)
At confluence with 22 East Drainage (levee not failed) ..	*5,055
Approximately 4,300 feet upstream of confluence with Metzler Wash at corporate limits	*5,064
Metzler Wash:	
Approximately 350 feet downstream of Clarkson Drive	*5,067
Just upstream of Lamoille Highway	*5,096
Approximately 2,000 feet upstream of Lamoille Highway	*5,136
Panorama Wash:	
At Lamoille Highway	*5,078
Approximately 1,300 feet upstream of Lamoille Highway	*5,106
Culley's Gulley:	
Approximately 550 feet downstream of Wildwood Way	*5,106
Just upstream of Pinion Road .	*5,152
Approximately 450 feet upstream of Lamoille Highway	*5,190
Eightmile Creek:	
Approximately 550 feet downstream of Fairgrounds Road	*5,096
Just upstream of Mittry Avenue	*5,158
Approximately 5,000 feet upstream of Mittry Avenue	*5,210
22 Middle Drainage:	
Approximately 150 feet upstream of Bullion Road	*5,071
Approximately 2,300 feet upstream of Bullion Road	*5,119
22 East Drainage:	
Approximately 150 feet downstream of Bullion Road	*5,058
Approximately 2,800 feet upstream of Bullion Road	*5,128
Fifth Street Drainage:	
Just upstream of Chris Avenue	*5,206
Just upstream of Copper Street	*5,254
Approximately 3,900 feet upstream of Rolling Hills Drive	*5,305
Golf Course Drainage:	
At confluence with Humboldt River	*5,064
Just upstream of Idaho Street .	*5,080
Approximately 4,650 feet upstream of Interstate Highway 80	*5,192
East Adobe Creek:	
Approximately 200 feet upstream of Idaho Street	*5,042
Approximately 2,250 feet downstream of Interstate Highway 80	*5,080
Approximately 400 feet upstream of Connolly Drive	*5,175

Maps are available for inspection at the City of Elko, Department of Engineering Services, 1751 College Avenue, Elko, Nevada.

Elko County (Unincorporated Areas) (FEMA Docket No. 7132)

Source of flooding and location	# Depth in feet above ground. *Elevation in feet (NGVD)
Humboldt River at Elko:	
Approximately 4,800 feet downstream of truss bridge—north side of railroad	*5,035
Approximately 4,800 feet downstream of truss bridge—south side of railroad	*5,040
Approximately 1,350 feet upstream of truss bridge	*5,048
At confluence with Culley's Gulley	*5,064
Approximately 4,550 feet upstream of confluence with Culley's Gulley	*5,070
Culley's Gulley:	
Approximately 300 feet upstream of the confluence with Humboldt River	*5,068
Approximately 100 feet upstream of Last Chance Road	*5,106
22 Middle Drainage:	
Approximately 1,600 feet upstream of Bullion Road	*5,106
Approximately 1,900 feet upstream of Bullion Road	*5,110
East Adobe Creek:	
Approximately 250 feet downstream of Interstate Highway 40	*5,042
Approximately 200 feet upstream of Interstate Highway 40	*5,042

Maps are available for inspection at the County Manager's Office, Elko County, 569 Court Street, Elko, Nevada.

NORTH DAKOTA

Minot (City), Ward County (FEMA Docket No. 7126)

Source of flooding and location	# Depth in feet above ground. *Elevation in feet (NGVD)
Souris River:	
At 37th Avenue Southeast	*1,544
Approximately 1,600 feet upstream of 27th Street Southeast	*1,546
Approximately 800 feet upstream of Eighth Avenue Southeast	*1,547
Approximately 500 feet downstream of First Avenue Northeast	*1,549
Approximately 1,100 feet upstream of Fourth Avenue Northwest	*1,551
Approximately 1,100 feet downstream of Third Avenue Northwest	*1,552
Approximately 800 feet downstream of River Road	*1,554
Approximately 800 feet upstream of River Road	*1,555
Approximately 3,000 feet upstream of U.S. Highway 83 Bypass	*1,559
At confluence with Gassman Coulee	*1,563
Approximately 3,100 feet downstream of 58th Street Northwest	*1,565
Approximately 6,300 feet upstream of 58th Street Northwest	*1,567

Maps are available for inspection at City Hall, City of Minot, Engineering Department, 515 Second Avenue SW, Minot, North Dakota.

Velva (City), McHenry County (FEMA Docket No. 7126)

Source of flooding and location	# Depth in feet above ground. *Elevation in feet (NGVD)
Souris River:	
Approximately 100 feet downstream of Main Street	*1,508
Approximately 2,200 feet upstream of Main Street	*1,509
Approximately 2,600 feet upstream of Main Street	*1,509

Maps are available for inspection at City Hall, City of Velva, 101 First Street West, Velva, North Dakota.

Velva (Township) McHenry County (FEMA Docket No. 7132)

Source of flooding and location	# Depth in feet above ground. *Elevation in feet (NGVD)
Souris River:	
Approximately 2,700 feet downstream of Main Street ..	*1,507
Approximately 1,700 feet downstream of Main Street ..	*1,508
Approximately 200 feet downstream of Main Street	*1,508
Approximately 2,700 feet upstream of Main Street	*1,509
Approximately 4,500 feet upstream of Main Street	*1,510

Maps are available for inspection at the McHenry County Auditor's Office, 407 South Main Street, Towner, North Dakota.

OKLAHOMA

Tulsa (City) Tulsa, Osage, and Rogers Counties (FEMA Docket No. 7122)

Source of flooding and location	# Depth in feet above ground. *Elevation in feet (NGVD)
Mingo Creek:	
Just upstream of 56th Street North	*591
Just upstream of 36th Street North	*602
Just upstream of Pine Street ...	*613
Just upstream of 11th Street North	*624
Just upstream of 41st Street South	*653

Source of flooding and location	# Depth in feet above ground. *Elevation in feet (NGVD)
Just upstream of 51st Street South	*668
Just upstream of 61st Street South	*690
Just downstream of Memorial Drive	*727
Mill Creek:	
At the confluence with Mingo Creek	*623
Just upstream of 89th East Avenue	*631
Just upstream of Memorial Drive	*644
At 73rd East Avenue	*660
Jones Creek:	
At the confluence with Mill Creek	*631
Just upstream of Memorial Drive	*646
Just upstream of 71st East Avenue	None
Approximately 250 feet upstream of 69th East Avenue	*686
Audubon Creek:	
At the confluence with Mingo Creek	*637
Just upstream of 87th East avenue	*646
Approximately 2,220 feet upstream of 31st Street South	*681
Alsuma Creek:	
At the confluence with Mingo Creek	*658
Just upstream of 47th Place South	None
At 51st Street South	*666
At Mingo Road	*669
Tupelo Creek:	
At the confluence with Mingo Creek	*621
Approximately 500 feet upstream of Mingo Valley Expressway	*632
Just upstream of 11th Street	*644
Just upstream of 14th Street	*649
At 21st Street	*672
Tupelo Creek Tributary:	
At the confluence with Tupelo Creek	*648
Just upstream of 119th East Avenue	*664
Just downstream of 124th East Avenue	*680
Brookhollow Creek:	
At the confluence with Mingo Creek	*641
Just upstream of Garnett Road	*661
Approximately 100 feet upstream of South 121st East Avenue	*680
Brookhollow Creek Tributary:	
At the confluence with Brookhollow Creek	*654
Approximately 300 feet upstream of Garnett Road	*664
Just upstream of 121st East Avenue	*678
Approximately 800 feet upstream of 129th East Avenue	*706
Tributary to Brookhollow Creek Tributary:	
At the confluence with Brookhollow Creek Tributary	*693
Just upstream of 131st East Avenue	*708
Approximately 1,900 feet upstream of 131st East Avenue	*718
Southpark Creek:	
At the confluence with Mingo Creek	*653
Just upstream of Mingo Valley Expressway	*659
At Garnett Road	*666
Catfish Creek:	
At the confluence with Mingo Creek	*668
At 55th Street South	*670
At 61st Street South	*681
Douglas Creek:	
At the confluence with Mingo Creek	*612
Little Creek:	
At the confluence with Mingo Creek	*600
Quarry Creek:	
At the confluence with Mingo Creek	*604
Eagle Creek:	
At the confluence with Mingo Creek	*607
Sugar Creek:	
At the confluence with Mingo Creek	*648
Ford Creek:	
At the confluence with Mingo Creek	*663
Maps are available for inspection at the City of Tulsa, Department of Public Works, 200 Civic Center, Tulsa, Oklahoma.	

OREGON

Marion County (Unincorporated Areas) (FEMA Docket No. 7134)

Source of flooding and location	# Depth in feet above ground. *Elevation in feet (NGVD)
Willamette River:	
Approximately 6.9 miles below State Highway 22 westbound (Marion Street Northeast)	*124
Approximately 4.2 miles below State Highway 22 westbound (Marion Street Northeast)	*134
Approximately 2 miles below State Highway 22 westbound (Marion Street Northeast)	*137
Approximately 0.6 mile above State Highway 22 westbound (Marion Street Northeast)	*143
Approximately 1 mile above State Highway 22 westbound (Marion Street Northeast)	*144
Maps are available for inspection at the Marion County Courthouse, 100 High Street NE, Salem, Oregon.	

Polk County (Unincorporated Areas) (FEMA Docket No. 7134)

Source of flooding and location	# Depth in feet above ground. *Elevation in feet (NGVD)
Willamette River:	
Approximately 13,500 feet downstream of confluence of Glenn Creek	*124
Approximately 500 feet downstream of confluence of Glenn Creek	*133
Approximately 1,300 feet upstream of confluence of Glenn Creek	*135
Approximately 3,100 feet downstream of Southern Pacific Railroad	*141
At State Highway 22	*142
Maps are available for inspection at the Community Development Department, Polk County Courthouse, 850 Main Street, Dallas, Oregon.	

Salem (City), Marion and Polk Counties (FEMA Docket No. 7134)

Source of flooding and location	# Depth in feet above ground. *Elevation in feet (NGVD)
Willamette River:	
Approximately 3.7 miles downstream of confluence with Mill Creek	*133
Approximately 3.3 miles downstream of confluence with Mill Creek	*135
Approximately 2.1 miles downstream of confluence with Mill Creek	*137
Approximately 0.8 mile downstream of confluence with Mill Creek	*139
Approximately 300 feet downstream of State Highway 22 eastbound (Center Street Northeast)	*142
Maps are available for inspection at 555 Liberty Street SE, Salem, Oregon.	

TEXAS

Comanche (City) Comanche County (FEMA Docket No. 7132)

Source of flooding and location	# Depth in feet above ground. *Elevation in feet (NGVD)
Indian Creek:	
At eastern corporate limits of the City of Comanche	*1,333
At confluence with Tributary 1	*1,342

Source of flooding and location	# Depth in feet above ground. *Elevation in feet (NGVD)
At confluence with Horse Creek	*1,348
50 feet downstream of State Highway 16	*1,360
200 feet downstream of confluence with Tributary 2	*1,370
200 feet downstream of confluence with South Fork of Indian Creek	*1,375
100 feet downstream of Indian Creek Drive	*1,390
At corporate limits	*1,393
South Fork of Indian Creek:	
At confluence with Indian Creek	*1,376
50 feet upstream of Indian Creek Drive	*1,391
At western corporate limits	*1,416
Horse Creek:	
At confluence with Indian Creek	*1,348
At upstream face of Summit Avenue	*1,360
At southern corporate limits	*1,374
Tributary 1:	
At confluence with Indian Creek	*1,342
50 feet upstream of Central Avenue (U.S. Highway 67)	*1,361
100 feet upstream of Walcott Avenue	*1,374
At downstream face of Austin Street	*1,394
Tributary 2:	
At confluence with Indian Creek	*1,371
50 feet upstream of Central Avenue (U.S. Highway 67)	*1,381
100 feet upstream of State Highway 36	*1,395
1,000 feet upstream of FM 1689	*1,420
Tributary 3:	
At confluence with Indian Creek	*1,372
100 feet upstream of Indian Creek Drive	*1,390
At southern corporate limits	*1,428
Tributary 4:	
At confluence with Tributary 3	*1,420
At limit of study	*1,435
Tributary 5:	
At downstream face of State Highway 16	*1,351
100 feet upstream of airport runway	*1,373
At limit of study	*1,401
Maps are available for inspection at City Hall, City of Comanche, 114 West Central, Comanche, Texas.	

(Catalog of Federal Domestic Assistance No. 83.100, ''Flood Insurance.'')

Dated: August 22, 1995.

Richard T. Moore,

Associate Director for Mitigation.

[FR Doc. 95–21397 Filed 8–28–95; 8:45 am]

BILLING CODE 6718–03–M

FEDERAL COMMUNICATIONS COMMISSION

47 CFR Part 73

[MM Docket No. 94–123; FCC 95–314]

Radio Broadcast Services; Television Program Practices

AGENCY: Federal Communications Commission.

ACTION: Final rule.

SUMMARY: This *Report and Order* repeals the Commission's Rules regarding the Prime Time Access Rule. The Commission had invited comments in a rulemaking proceeding to assess the legal and policy justifications, in light of current economic and technological conditions, for the Prime Time Access Rule and to consider the continued need for the rule in its current form. Based on the comments received from interested parties, including economic and empirical analyses of the effects of repealing or retaining the rule, the Commission concludes that the public interest warrants the repeal of PTAR. In repealing the rule, the Commission believes a one-year transition period is appropriate to provide parties time to adjust their programming strategies and business arrangements.

EFFECTIVE DATE: August 30, 1996.

FOR FURTHER INFORMATION CONTACT: Charles W. Logan or Alan E. Aronowitz, Mass Media Bureau, Policy and Rules Division, Legal Branch, (202) 776–1663, or Alan Baughcum, Mass Media Bureau, Policy and Rules Division, Policy Analysis Branch, (202) 739–0770.

SUPPLEMENTARY INFORMATION: This is a synopsis of the Commission's *Report and Order* in MM Docket No. 94–123, adopted July 28, 1995, and released July 31, 1995. The complete text of this document is available for inspection and copying during normal business hours in the FCC Reference Center (Room 239), 1919 M Street NW., Washington, D.C. 20554, and may be purchased from the Commission's copy contractor, International Transcription Service, (202) 857–3800, 2100 M Street NW., Washington, D.C. 20037.

Synopsis of the Report and Order

1. The Commission's Prime Time Access Rule (''PTAR'') generally prohibits network-affiliated television stations in the top 50 prime-time television markets (''Top 50 Market Affiliates'') from broadcasting more than three hours of network programs (the ''network restriction'') or former network programs (the ''off-network restriction'') during the four prime time viewing hours (*i.e.*, 7 to 11 p.m. Eastern and Pacific times; 6 to 10 p.m. Central and Mountain times). The rule exempts certain types of programming (*e.g.*, runovers of live sports events, special news, documentary and children's programming, and certain sports and network programming of a special nature) which are not counted toward the three hours of network programming.[1] PTAR was promulgated in 1970 in response to a concern that the three major television networks—ABC, CBS and NBC—dominated the program production market, controlled much of the video fare presented to the public, and inhibited the development of competing program sources. The Commission believed that PTAR would increase the level of competition in program production, reduce the networks' control over their affiliates' programming decisions, and thereby increase the diversity of programs available to the public. PTAR also came to be viewed as a means of promoting the growth of independent stations in that they did not have to compete with Top 50 Market Affiliates in acquiring off-network programs to air during the access period.

2. On October 20, 1994, the Commission adopted a *Notice of Proposed Rule Making* (''*Notice*''), 59 FR 55402 (November 7, 1994), in this docket to conduct an overall review of the continuing need for PTAR given the profound changes that have occurred in the television industry since 1970. In response to the *Notice*, we received a substantial number of comments from interested parties, including economic and empirical analyses of the effects of repealing or retaining the rule.

3. Based on this record, the Commission concludes that PTAR should be extinguished. The three major networks do not dominate the markets relevant to PTAR. There are large numbers of sellers and buyers of video programming. Entry, even by small business, is relatively easy. There are a substantially greater number of broadcast programming outlets today than when PTAR was adopted in 1970 due to the growth in numbers of independent stations. In addition, nonbroadcast media have proliferated. We also find, given these market conditions, and the record before us,

[1] 47 CFR 73.658(k)(1)–(6).

that the rule is not warranted as a means of promoting the growth of independent stations and new networks, or of safeguards affiliate autonomy. Indeed, the rule generates costs and inefficiencies that are not now offset by substantial, if any, benefits.

4. The Commission thus finds that the public interest warrants the repeal of PTAR. In scheduling repeal of the rule, a one-year transition period is appropriate to provide parties time to adjust their programming strategies and business arrangements prior to the elimination of a regulatory regime that has been in place for 25 years. Consequently PTAR will be repealed effective August 30, 1996.

5. This conclusion is consistent with the Commission's 1993 decision to schedule the repeal of the financial interest and syndication rules ((''fin/syn''), which was upheld on appeal by the U.S. Court of Appeals for the Seventh Circuit. *See Capital Cities/ABC, Inc. V. FCC,* 29 F.3d 309 (7th Cir. 1994). We determined that repeal of the fin/syn rules was warranted given the increased competition facing the networks and the conditions in the television programming marketplace. Based upon these findings we eliminated a number of the fin/syn rules immediately and set a timetable for repeal of the remainder.

6. The Commission reaches its conclusion to PTAR by analyzing the following factors: First, it evaluates whether the networks dominate the markets relevant to the rule, or would be likely to dominate them in the absence of PTAR. Second, it assesses the costs imposed by the rule. Third, taking into account its findings regarding whether the networks dominate and the costs of the rule, it analyzes whether the rule is necessary as a means of pursuing the benefits of fostering independent programming, promoting the growth of independent stations and new networks, and safeguarding affiliate autonomy.

I. The Networks and Their Affiliates Do Not Dominate Markets Relevant to PTAR

7. The Commission's adoption of PTAR in 1970 was premised on a view that the three networks dominated television programming. The Commission's analysis of the record leads it to conclude that neither the networks nor their affiliates dominate video programming distribution or the video programming production market. The Commission reaches this conclusion by employing a two-step market power analysis which involves defining the relevant market and examining evidence of undue market power.

A. Video Programming Distribution

8. PTAR applies to ABC, CBS, and NBC affiliates in the Top 50 PTAR Markets. These networks and their affiliates display or ''distribute'' television programming to viewers and sell air time to customers seeking to advertise. In program distribution, networks and their affiliates compete with programs broadcast by independent stations. The list of economic substitutes for network broadcasts may also include cable programs, programs over satellite television systems, videocassette rentals, and other alternatives. For purposes of its review of PTAR, the Commission will focus on program distribution comprising only broadcast television station operators and their networks. This is a conservative, perhaps overly narrow, approach given that a good case can be made that, from the viewers' perspectives, cable system operators inter alia are economically relevant alternative distributors of video programming. Since PTAR constrains the market activities of affiliates of the three major networks in the Top 50 PTAR Markets, the Commission's primary focus in this section is whether these network affiliates would be able to exercise undue market power in the delivery of video programming in their respective local markets.

9. Based on the record, it is clear that, in the Top 50 PTAR Markets, the three original networks and their affiliates face more competition for viewers than they did in 1970 or even in 1980. There are substantially greater numbers of television stations than there were in 1970. For example, the number of independent stations has grown by 450 percent during this time. The effects of this competition are readily apparent in examining the networks' audience shares over the years. Looking at prime time alone, the time period when the networks' viewing shares are the highest, each network's average share of the prime time audience declined from a 31.1 viewing share during the 1971/72 season to a 20.2 share during the 1993/94 season, a loss of almost one-third of each network's audience. ABC, CBS, NBC, and Fox had individual 1993/94 prime-time audience shares of 20.1 , 22.7, 17.8 and 11.4 percent, respectively. The Commission's calculation of affiliate audience shares in each of the Top 50 PTAR Markets is consistent with network audience shares nationally. No single network or network affiliate would seem to have the ability to dominate video programming distribution in any of these local markets.

10. Nor is it likely that affiliates in a local Top 50 PTAR Market would dominate as a group since video programming distribution is only moderately concentrated. In its 1993 decision setting a timetable for repeal of the fin/syn rules, the Commission stated that ''inter-network competition for programming is 'intense.'" Nothing in the record before us calls this conclusion into doubt, as the networks continue to wage a ratings war that has only been heightened with the emergence of the Fox network.

11. The Commission thus concludes that, even focusing narrowly on local broadcast video programming distribution, the three networks and their affiliates cannot singly or jointly dominate video program distribution in the Top 50 PTAR Markets. This is a strong conclusion because the inclusion of additional television alternatives such as cable, satellite systems, video dialtone, etc., would serve to make domination by the networks and their affiliates even less likely.

B. The Video Programming Production Market

12. Defining the relevant video programming production market begins by focusing on the products produced by beneficiaries of PTAR. Entertainment series, news magazine shows, and game shows are examples of the programs sold by independent producers and syndicators of prime-time programs to network affiliates and independents. The list can be extended to include movies (whether for television, theatrical presentation, or cassette rental), sports programs, talk shows, news programming (local and national), musical variety, dramas, arts presentations, etc. Suppliers of these programs include not only those suppliers that actually are employed in a given year to produce programming for network prime time but also those producers willing and able to produce such programming in the event that market price increased above the competitive level. The list of suppliers will include television networks, independent syndicators, Hollywood movie studios, and international video producers. Buyers of such programming are not limited to television broadcasters but will include other purchasers of video programming such as cable networks and operators, direct broadcast satellite operators, videocassette distributers and, most recently, video programming affiliates of local telephone companies, which propose to offer video dialtone service. This market is clearly national and perhaps international in scope, because

television broadcasters obtain a large portion of their programs from national providers.

13. There is no evidence in the record that the networks exercise monopsony or oligopsony power in the video programming production market, i.e., that one (monopsony) or several firms (oligopsony) artificially restrict the consumption of programming and depress the market price paid for programming. Aside from the growth in the broadcast industry described above, there are nearly 150 national and regional cable networks, most of which transmit original, non-network programming. Also, other nonbroadcast video program distributors—such as cable, wireless cable, and satellite services—have grown. Finally, first-run syndicators are quite active as buyers (and sellers). According to the record, in 1994 the video entertainment programming purchased by each of the three networks accounted for approximately 9.4 percent of aggregate expenditures on video programming in the United States, after taking into account distribution fees associated with syndicated programming and home videos. These market shares indicate that demand for video programming is not concentrated, and that the networks clearly cannot be said to exercise undue market power in the video programming production market, either individually or together. The record also shows that the supply side of the video programming production market is no more concentrated than the demand side.

14. The Commission therefore concludes that no buyers or sellers, acting alone or together, are likely to be able to exercise undue market power in the video programming production market. In addition, entry barriers are low. In particular, it is unlikely that the three networks will be able to exercise market power in the video programming production market, either on the demand or supply side, if PTAR is repealed.

C. The National Television Advertising Market

15. Several proponents of PTAR argue that the three networks dominate the television advertising market. But these parties do not present sufficient evidence to support this argument. Moreover, PTAR was not adopted to address the structure or performance of the advertising industry. This is why the *Notice* did not explicitly seek information on television advertising markets. The Commission adopted PTAR due to concerns that the three networks dominated the production and delivery of television programming. Examination of video programming distribution and the video programming production market is thus directly relevant to whether PTAR is necessary under today's market conditions. The Commission cannot say the same for the television advertising market, nor are we persuaded that PTAR is the appropriate mechanism for addressing the networks' role in these markets.

II. The Costs of PTAR

16. In assessing the continuing need for PTAR, the Commission must take into account the costs the rule imposes on the networks, their affiliates, producers of network programming, television viewers, and the efficient functioning of the market. One obvious cost of the rule is that it restricts the programming choices of Top 50 Market Affiliates. They cannot air either network or off-network programming during the access period. One set of comments describes how the off-network restriction interferes with the smooth functioning of the network-affiliate relationship by raising the overall costs of network broadcasting. With PTAR in place, the affiliate must either make investments to produce programs itself, or it must purchase first-run programs from syndicators. In the latter case, the affiliate bears the transaction costs of establishing relationships with syndicators and independent programmers. In either case, the affiliate bears the added risk of how first-run programming will perform relative to known-to-be popular network reruns. As a result of these higher costs, the total of net revenues to be shared among networks and affiliates is made smaller by PTAR.

17. PTAR harms not only networks and affiliates, but the producers of network programming. The off-network restrictions has had the unintended effect of discouraging investment in prime-time programming. Producers rely to a great extent on their ability to sell reruns of their programs—*i.e.*, off-network programs—to recoup their costs and to earn a profit. The license fee the networks pay for the right to air prime-time entertainment programs often does not cover the costs of producing these programs. The off-network restriction, however, diminishes producers' ability to recoup unrecovered costs by artificially restraining the prices of off-network programming. It does so by eliminating the Top 50 Market Affiliates from the range of potential purchasers of this programming. By reducing demand, the prices for off-network shows are reduced. The Commission believes that PTAR produces costs and inefficiencies to viewers that are larger than the benefits, if any, of PTAR to viewers.

18. In addition, PTAR as a whole prevents the networks and their affiliates from taking advantage of network efficiencies during the access hour. Networks can deliver large audiences to advertisers, which in turn allows the networks and their affiliates to provide higher cost programming that is quite popular among audiences during prime time. While the parties dispute the size of the economic cost due to the loss of network efficiencies, the Commission concludes that this cost far exceeds PTAR's economic benefits.

III. Analyzing the Public Interest Need for PTAR

A. Increasing Opportunities for Independent Programmers

19. PTAR's principal purpose was to promote source diversity by strengthening existing independent television program producers and encouraging entry of new producers. In adopting PTAR, the Commission predicted that the rule would increase the net amount of diverse programming available to the viewing public and induce the entry of new program suppliers into the market.

20. A number of parties argue that PTAR has failed to promote these goals. They point out that four companies—Paramount, Warner Brothers, Fox, and King World—distribute over 95 percent of the first-run syndicated programming aired during the PTAR access period. Putting aside the question of who distributes access period programming, opponents of the rule also argue that PTAR has failed to increase diversity in terms of who produces such programming. Moreover, the rule has been criticized for actually lowering program quality and diversity. Without judging the quality of particular programs, the Commission agrees that PTAR, by eliminating network programming during the access hour, may have resulted in the loss of efficiencies that the networks and their affiliates may have enjoyed in the absence of the rule. The Commission notes, however that there are many variables that affect the number of program producers and program types in the market, with or without PTAR. Nevertheless, we recognize the limits of regulatory efforts to promote program diversity, and realize that PTAR prevents the use of network efficiencies during the access hour.

21. Mindful of these issues, the Commission turns to the critical question of whether PTAR is necessary today as a means of promoting the

growth of independent programmers and source diversity. In answering this question, it is important to remember that in adopting PTAR, the Commission cautioned that it was not its intention to carve out a competition free haven for syndicators or to smooth the path for existing syndicators. Rather, the central objective of the rule was to provide opportunity for the competitive development of alternate sources of television programs. The Commission no longer believes PTAR is necessary to provide this opportunity under today's market conditions. The Commission reached a similar conclusion in eliminating the fin/syn rules' restriction on network acquisition of financial interest and syndication rights in network prime time entertainment programming. In reaching this conclusion, the Commission dealt with the same source diversity concerns and stated that if profits are competitive, then the only reason to employ regulatory devices to protect producer profits is if we determined that, for some reason, the public required a greater array of producers than the market would normally bear. As in the fin/syn proceeding, no party has provided any reasoned justification for such a result here.

22. Repeal of PTAR will subject suppliers of first-run syndicated programming to greater competition during the access period. This competition in today's marketplace can provide incentives to provide more innovative, higher quality programming, all of which benefits the consumer. Repeal of PTAR will also eliminate the costs generated by the rule. Most importantly, prices for off-network programming will no longer be artificially constrained, which we expect will encourage investment in the production of network programming.

23. Proponents of the rule have not provided any evidence to support their claims that this competition will destroy the market for first-run non-network syndicated programming. The record indicates that first-run programming is often quite popular among audiences, and may very well be carried by network affiliates during the access hour in the Top 50 PTAR markets even after repeal of the rule. To the extent off-network or network programming would displace first-run syndicated programs from the Top 50 Market Affiliates, first-run programs should be able to find a place on independent stations, not to mention other outlets such as cable.

B. Fostering the Growth of Independent Stations and New Networks

24. PTAR provides independent stations greater access to off-network programming and prevents them from having to compete against network programming during the access hour. Proponents of PTAR argue that the rule is necessary to promote the Commission's outlet diversity goals by fostering the growth of independent stations and new networks. But the record does not conclusively show that repeal of either the off-network provision or the network restriction of PTAR will undo the growth of independent stations since the rule was adopted. Nor will repeal of the rule likely undermine the development of new broadcast networks, or otherwise harm the Commission's outlet diversity goals.

25. The number of independent television stations has grown by almost 450 percent since PTAR was adopted, from 82 stations in 1970 to over 450 today. The record indicates that advances in television design, the growth of cable penetration, and the growth in demand for television advertising all have strengthened independent television. Independents also have a robust supply of programming to turn to under today's market conditions. The repeal of PTAR is unlikely to threaten these advancements. Nor is there sufficient basis in the record to conclude that repeal will so undermine the ratings and profits of independent stations that our outlet diversity goals will be implicated. It is likely that repeal of the rule will subject these stations to greater competition in acquiring off-network programming and in attracting audiences during the access hour and prime time. But there is not sufficient evidence in the record to support the claims that this competition will result in dramatic ratings declines and revenue losses to an extent that threatens the overall viability of independent stations and their ability to satisfy their public interest obligations. Relatedly, there is no reliable evidence to indicate that repeal of PTAR will jeopardize the station base of the new networks or threaten their further development.

26. The Commission consequently concludes that PTAR is not warranted as a means of ensuring the growth of independent television stations or new networks. This is especially the case given the costs of the rule. The off-network provision discourages investment in network programming. Moreover, it is becoming increasingly inequitable to provide a competitive advantage to independent stations over network affiliates in today's marketplace. The networks and their affiliates, like independents, face growing competition from non-broadcast media.

27. The Commission reaches this conclusion by addressing three questions raised by the commenters: First, does the record show that the ''UHF handicap'' warrants affording independent stations a competitive advantage in the form of PTAR? Second, does the record demonstrate that PTAR is needed to support independent television stations' ratings and profitability and that repeal of PTAR would significantly harm outlet diversity? Third, does the record support the argument that the repeal of PTAR will frustrate the development of new networks?

1. The UHF Handicap

28. Proponents of the rule seek to justify PTAR by pointing to the signal reach disadvantage of UHF stations relative to VHF stations. They maintain that this ''UHF handicap'' places independent stations at a structural disadvantage since most of them are in the UHF band. Affiliates of the three major networks are predominantly VHF stations.

29. The Commission's review of the record, however, as well as Commission findings in other proceedings, leads it to conclude that the UHF handicap has been reduced to some extent. First, Congress and the Commission have taken a number of steps over the years to ameliorate this handicap by requiring television equipment improvements. Second, the growth of cable has resulted in a reduction in the UHF handicap with respect to those viewers that subscribe to cable. However, although cable has reduced the UHF handicap, the Commission understands that it may still affect some portion of viewers who are not cable subscribers.

30. While the UHF disparity continues for some viewers, we do not think the public interest is served by tying PTAR to its complete elimination. The rule does not and cannot address the technical disparities that still exist between some stations. Moreover, the rule has never been tailored to the UHF/VHF distinction. Rather, PTAR provides a competitive advantage to independent stations by limiting the programming options available to Top 50 Market Affiliates, even in cases where the affected network affiliates are themselves UHF stations. The Commission does not believe this is appropriate given today's market

conditions and the costs imposed by the rule. The handicap has been reduced. Affiliates, like independents, are facing increased competition in the television marketplace from non-broadcast sources. The Commission thus concludes that the UHF handicap that remains does not warrant continuation of PTAR.

2. PTAR and the Ratings, Growth, and Profitability of Independent Television Stations

31. The Impact of PTAR on Ratings and Station Growth. Proponents of the rule rely on a regression analysis set forth in the comments submitted by the Law and Economics Consulting Group (''the LECG Study'') to support their claims regarding the importance of PTAR to independent stations. The LECG analysis attempts to demonstrate that the adoption of each of the two components of PTAR (the three-hour network restriction and the off-network restriction) increased the ratings of independent stations. The same analysis also seeks to show that repealing PTAR will result in a 58 percent drop in access period ratings and in a carry-over 67 percent drop in the ratings for the first (following) prime-time hour for independent television stations.

32. After an extensive review of the LECG Study, the Commission concludes that the LECG Study, and the arguments advanced by parties based on this study, do not provide sufficient evidence to demonstrate that repeal of PTAR will result in significant ratings declines for independent stations. For the same reasons, the study does not provide reliable evidence that PTAR has as a historical matter increased independent station ratings. There are numerous flaws in LECG's analysis that lead the Commission to this conclusion, including the following: (1) LECG does not link its econometric model to an underlying conceptual model of behavior in the television industry; (2) LECG ignores to problem of hysteresis (*i.e.*, even if PTAR caused certain changes in the past, there is no guarantee that its elimination will reverse those changes); (3) LECG's statistical methodology links changes in independent station's ratings PTAR solely to PTAR, and does not take into account other regulations that have benefited these stations; (4) There are errors and gaps in LECG's data sets; (5) There seem to be problems with LECG's specifications of its equations and their estimation; and (6) LECG's analysis reports point estimates for regression coefficients without confidence intervals, making it impossible to confirm that LECG's predicted ratings decline for independent stations are statistically distinguishable from zero.

33. The Commission further observes that while independent stations will be forced to pay competitive prices for off-network programming in the absence of PTAR, they will not necessarily be outbid for such programming. In market 51–100, 76 percent of syndicated programs aired by network affiliates is first-run rather than off-network. Moreover, in 1993, two of the top five off-network programs broadcast in markets 51–100 were aired more often on independent stations than on affiliates. It is also unlikely that all network affiliates in a market will flock to off-network shows, given the incentive to counter-program with different program formats. In addition, in the event the networks and their affiliates opt to run network programming during the access hour, off-network fare will continue to be available to independents. Finally, in the event an off-network program is displaced from an independent station, the station can turn to first-run syndicated programming. First-run programming can generate higher ratings than off-network shows, with associated carryover ratings benefits.

34. The Commission also notes that the argument advanced in favor of giving a competitive advantage to independent stations, taken to its logical conclusion, would suggest that PTAR coverage be redefined so that it applies to smaller, and less financially secure, markets. Yet no party has proposed such a result. To the contrary, PTAR's benefits appear to flow mainly to the stronger independent stations in the country. In fact, these stations generally have affiliated with one of the new networks or are part of a jointly owned station group. According to comments submitted by NBC, there is not a single independent station in the top 50 markets showing a top-five rated off-network program that is (1) a UHF station that is (2) not affiliated with Fox, UPN, or WB, and/or (3) not owned by a company owning three or more stations. Thus, the impact of repeal of the rule may primarily be felt by the stronger independent stations. In addition, these stations participate in joint purchasing or production arrangements that may ameliorate some of the effects of PTAR's repeal on program prices.

35. Growth in Numbers of Independents. One of the reasons that the LECG Study and INTV claim as support for the proposition that repeal of PTAR will substantially hurt UHF independent stations is that the adoption of PTAR allegedly was responsible for significant growth in the number of independent stations, albeit not until 5–15 years later. However, a study submitted by Economics, Inc. (''EI''), shows that LECG's model can be used to demonstrate that PTAR is *not* responsible for the increase in the number of independent stations. Thus, the Commission cannot conclude that PTAR's adoption caused a significant increase in the number of independent stations. Nor can the Commission therefore conclude that PTAR's repeal will cause the large reduction in the number of independent stations claimed by the rule's proponents.

36. The impact of PTAR on Profits and Programming. Even if the Commission assumes that PTAR proponents are correct in their prediction of a ratings decline for independent stations in the event PTAR is repealed, they have not demonstrated how that would affect independent stations and the future development of new networks. In particular, LECG has not provided any convincing estimate of how a decline in audience share during 1 or 2 hours of prime time, would lead to a large decline in station revenues and a resulting decline in station profits. Proponents of the rule have thus not provided any reliable basis to find that the profits of independent stations would decline significantly. More importantly, there is no reliable evidence in the record to support these parties' claims that repeal of the rule will so affect the financial health of independent stations as to force stations off the air or undermine their ability to provide public interest programming, including news and other public affairs programming.

37. What the record does show is a generally healthy financial picture for independent stations. Profit data published by the National Associate of Broadcasters (''NAB'') indicate that the average independent station has generally been profitable, at least since the mid-1980s. The average UHF station has been profitable since 1992 after a number of unprofitable years through the 1980s. This strong financial picture extends to the independent stations not affiliated with the largest of the new networks, Fox. These stations reported, on average, 1993 profits of four million dollars per station. UHF non-Fox affiliated independents reported average annual profits of $1.5 million per station in 1993. Also, these average profits understate profitability in the largest markets, those to which PTAR applies.

38. Conclusions. The Commission thus concludes that PTAR, which has become overly broad and inequitable, is not necessary to provide independent

stations a competitive advantage relative to the Top 50 Market Affiliates. Independent stations may face greater competition in programming the access hour without PTAR. But there is no reliable evidence that this will so jeopardize the financial health of independent stations as to implicate public interest concerns, particularly those relating to outlet diversity.

3. Repeal of PTAR and New Broadcast Networks

39. According to proponents of PTAR, one of the major reasons why PTAR has been and continues to be important is that by promoting the health of independent stations, it has helped create an important and necessary condition for the development of the new networks—Fox, UPN and WB. Proponents of the rule argue that repeal will severely harm independent stations and, in turn, harm the growth of UPN and WB. These parties, however, have not demonstrated the link between the asserted harm to independent stations as a result of the repeal of PTAR and the decreased likelihood of the development of new networks. In their analysis concerning PTAR and the improving position of those stations and new networks, PTAR proponents seem to suggest that the profitability of independent stations has been responsible for the growth of newly emerging networks, especially the Fox network. However, it is equally plausible that many affiliates of the Fox network owe their improved profit position to their affiliation with Fox. Regardless of the possible importance of both parts of this interaction, parties favoring continuation of PTAR have not demonstrated in any convincing way that PTAR itself is ultimately responsible for the development of newly emerging networks.

40. The Commission does not believe that repeal of PTAR will create the grounds for failure of newly-launched television networks nor for significant slowing in their development. Some independent stations may find their profits reduced as the industry adjusts to this change and other regulatory and technological changes. However, the Commission concludes that the prospects for independent stations and new networks overall are good. First, the Commission believes that the UHF signal disparity has been reduced, albeit not entirely. This permits competition for programming on more even terms between similarly situated UHF and VHF stations, most of which are now network affiliates. Second, the video programming production market appears to be open to entry by large and small firms with many producers actively seeking outlets for their programs. Third, the numbers of independent stations remain large enough to make it possible for new networks to add affiliates and expand audience reach. Finally, at the present time, virtually all categories of television broadcast stations are, on average, profitable. The repeal of PTAR will reduce costs imposed by the rule's restrictions on affiliates, network program producers, and viewers who prefer high-cost programming, and will not create significant problems for independent stations and new networks.

C. Reducing Network Ability to Dictate Affiliate Programming Choices

41. PTAR prohibits the Top 50 Market Affiliates from obtaining network-provided programs or off-network programs during the access period. In 1970, when it adopted PTAR, the Commission concluded that this was a reasonable method of protecting affiliates against the power of the networks. Under this reasoning, the affiliates did not have sufficient bargaining power to refuse to run network programs, even when doing so was not in their economic self-interest. Thus, although the rule limited the programming options available to affiliates during one hour and consequently limited to the same extent the viewing options available to viewers, nonetheless the affiliates may have believed they were better off with the rule than without the rule, given the dominant position of the three networks. The view was that while a network would dictate one program shown nationally for the access period, the rule would permit the affiliate to choose instead from a range of choices (*i.e.,* in-house or independently produced programs).

42. While advocating repeal of the off-network provision of PTAR, proponents of the network restriction argue that there are some indications that the networks continue to have significant bargaining leverage over their affiliates. Prime time clearance levels are very high. The record also shows that affiliates rarely preempt prime time network programming, and that affiliate agreements are often structured to discourage preemption. In addition, the increase in the number of independent stations may have increased the demand and competition for the most lucrative network affiliations. This may therefore reduce, at least to some degree, the increased leverage the network affiliates appear to have gained as a result of the emergence of the Fox network. Moreover, the WB and UPN networks, only recently launched and presently offering a minimal program schedule, may not yet provide a competitive alternative to affiliation with one of the other four networks.

43. On balance, however, the Commission does not believe PTAR's network restriction is the appropriate mechanism under current market conditions to address the issue of the relative bargaining power between networks and affiliates. As an initial matter, high clearance rates do not necessarily indicate undue network leverage; they may simply reflect the popularity and efficiencies of network programming. There is also evidence in the record indicating greater affiliate bargaining power today. The emergence of the Fox network certainly can be said to have improved affiliate bargaining power by creating a viable affiliation alternative to ABC, CBS, and NBC. The networks also point to the fact that the total amount of network programming during non-prime time dayparts has declined over the years as evidence of the inability of networks to dictate to affiliates. Finally, there are today many more options for obtaining programming even without having a network affiliation.

44. The Commission notes that it is not concerned with the relative bargaining position of networks and their affiliates to the extent it merely affects the distribution of profits between the parties. Rather, the public interest is implicated where network leverage prevents an affiliate from fulfilling its public interest obligations, such as broadcasting programming responsive to local interests, or distorts the normal market incentive to air programming according to viewer preferences.

45. The Commission thinks these issues are best addressed in the context of our rules governing a station's right to reject network programming, the filing of affiliation agreements, and its other rules regarding the network-affiliate relationship. The Commission has initiated a comprehensive review of these rules. In doing so, it will address the issues the parties have raised here, including whether networks have the capability and the incentive to exercise undue market or bargaining power in the absence of these rules and the public interest concerns any such capability and incentive would raise. These rules, and their corollary rulemaking proceedings, are better tailored to weigh these public interest issues and strike the appropriate balance regarding regulation of the network-affiliate relationship. PTAR, in contrast, is an

imprecise, indiscriminate response to these concerns.

IV. Summary of Findings and Transition

46. The record shows that the three networks now face greater competition than they did in 1970. There has been dramatic growth in the number of independent stations, and broadcasters now must compete for audiences with the increasing numbers of non-broadcast outlets, especially cable service. The networks can no longer be viewed as a funnel through which all television programming must pass. PTAR is thus not necessary to promote independent program sources, PTAR's primary goal. The record shows that the large number of video programming outlets today creates a healthy demand for non-network programs. The record further shows that there is no public interest reason for continuing PTAR as a means of providing independent stations or new broadcast networks a competitive advantage relative to network affiliates in programming the access hour. Finally, the Commission finds that PTAR is not an appropriate mechanism for safeguarding affiliate autonomy. The Commission thus finds that the public interest does not warrant the continuation of PTAR, especially given the costs the rule imposes.

47. The *Notice* sought comment on whether, in the event the Commission concluded that PTAR should be eliminated, it should repeal the rule immediately or adopt a transition mechanism that would sunset the rule after a certain period of time. As noted above, the record provides strong support for repeal of the rule. A transition consequently is not necessary to take a ''wait and see'' approach in order to test, and possibly revisit, the Commission's conclusion to repeal the rule. The Commission does, however, believe a short transition period is appropriate to allow industry participants to adjust to the changing economic conditions that might result from repeal of PTAR. The PTAR regulatory scheme has been in place for over two decades, during which time members of the industry have come to rely on the structure imposed by that scheme. Eliminating that structure precipitously may have disruptive effects as the marketplace adjusts to the deregulated environment. A one-year transition will give parties time to adjust their business plans and contractual arrangements prior to repeal of the rule and moderate an unnecessarily abrupt impact on affected stations.

48. The Commission rejects transition proposals that would continue PTAR for an indefinite or overly long period of time. Such proposals, if adopted, would impose costs that outweigh any possible benefits of a longer transition. The record in this proceeding demonstrates that continuation of the rule in the public interest; prolonging PTAR simply as a means of continuing to confer competitive benefits on independent stations therefore cannot be justified.

49. Nor does the Commission believe the scheduled repeal of the remaining fin/syn rules calls for a longer transition period for PTAR. A number of the fin/syn rules, including restrictions on network acquisition of financial interests in prime time programming, were eliminated over two years ago; the marketplace thus should have had time to adjust to the elimination of these rules. No party has made a convincing case that the upcoming planned repeal of the remainder of these rules will lead to any anticompetitive activities by the networks or undue disruption of the marketplace so as to warrant postponing PTAR repeal beyond a year. The Commission also does not believe it is necessary to take a staggered approach to repeal or schedule a final review of the rule prior to its scheduled expiration, as it did in the fin/syn proceeding. The record in this proceeding clearly supports repeal of PTAR, and the three networks can be said to be facing even more competition today than they were when the Commission established its fin/syn transition in 1993. Phased deregulation is less useful when the transition period is used as a means of minimizing disruption in repealing a regulation as opposed to taking several cautionary steps in order to confirm the planned elimination of an entire rule. The transition plan the Commission has adopted is not motivated by any uncertainty over its conclusion to repeal PTAR, but rather by a concern that immediate repeal could be unnecessarily disruptive. The Commission will thus schedule repeal of the rule in its entirety for August 30, 1996.

50. Other Issues. Given the Commission's conclusion that PTAR no longer serves the public interest and should be repealed, the Commission need not address the argument advanced by a number of parties that the rule is contrary to the First Amendment. The Commission also does not believe it is appropriate to alter the definition of ''network'' to include the new networks as urged by some parties. The Commission is not persuaded that this definition is inequitable or that it causes new networks to curtail their prime time offerings in order to evade the application of PTAR. In any event, the rule will expire in a year and would have little if any impact on an entity that became a ''network'' during that time period given the grandfathering provisions presently set forth in the rule. Finally, given the Commission's decision to repeal the rule, we will not modify the current exemptions to PTAR as proposed by a number of commenters. The proposed revisions to the definition of a ''network'' and the rule's exemptions are not appropriate for the one-year transition the Commission has established. Indeed, modifying these provisions of the rule could run directly counter to the purposes of the transition by creating uncertainty and disruption during a period that is intended to provide parties time to adjust for repeal of PTAR. The Commission will consequently retain PTAR in its existing form during the one-year transition period.

V. Administrative Matters

51. *Reason for the Action:* This action is taken to repeal the prime time access rule, 47 C.F.R. § 73.658(k), in response to changes in the communications marketplace, and to better adjust to the needs of the public.

52. *Objective of this Action:* The Commission believes that this action will remove barriers to competition in the markets for video programming and enhance program diversity for television viewers. The rule will be repealed on August 30, 1996, which will give affected parties time to adjust their business plans and contractual arrangements in order to avoid an unnecessarily abrupt impact associated with repeal to viewer and industry structures that have developed in the 25 years that the subject rule has been in place.

53. *Legal Basis:* Authority for the actions taken in this Report and Order may be found in Section 4(i) and 303(r) of the Communications Act of 1934, as amended, 47 U.S.C. Section 154(i) and 303(r).

54. *Any Significant Alternatives Minimizing the Impact on Small Entities and Consistent with the Stated Objectives:* The Commission determined that, based on the record developed in this proceeding and existing marketplace conditions, the public interest will be served by repeal of PTAR. Proponents of retaining the rule failed to establish that it remains necessary to ensure the diversity of programming sources and outlets contemplated by adoption of PTAR. Moreover, these parties have not demonstrated convincingly that PTAR

itself is ultimately responsible for the development of newly emerging networks or that repeal of the rule will threaten the station base of the new networks. Those favoring repeal of the rule established that the rule unnecessarily limits the programming choices of network-affiliated stations in the Top 50 television markets and discourages investment in network programming, without off-setting public interest benefits.

List of Subjects in 47 CFR Part 73

Radio broadcasting, Television broadcasting.

Rule Changes

Part 73 of Title 47 of the Code of Federal Regulations is amended as follows:

PART 73—RADIO BROADCAST SERVICES

1. The authority citation for Part 73 continues to read as follows:

Authority: 47 U.S.C. Sections 154, 303, 334.

§ 73.658 [Amended]

2. Section 73.658 is amended by removing and reserving paragraph (k).

Federal Communications Commission.

William F. Caton,

Acting Secretary.

[FR Doc. 95–21319 Filed 8–28–95; 8:45 am]

BILLING CODE 6712–01–M

DEPARTMENT OF COMMERCE

National Oceanic and Atmospheric Administration

50 CFR Parts 217 and 227

[Docket No.950427119–5214–06; I.D. 081495A]

RIN 0648–AH98

Sea Turtle Conservation; Restrictions Applicable to Shrimp Trawling Activities; Additional Turtle Excluder Device Requirements Within Certain Fishery Statistical Zones

AGENCY: National Marine Fisheries Service (NMFS), National Oceanic and Atmospheric Administration (NOAA), Commerce.

ACTION: Temporary additional restrictions on fishing by shrimp trawlers in the inshore and nearshore waters off Texas and a portion of Louisiana to protect sea turtles; request for comments.

SUMMARY: NMFS is imposing temporary additional restrictions on shrimp trawlers fishing in all inshore waters and offshore waters out to 12 nautical miles (nm) (22.2 km) from the COLREGS line, between the United States-Mexico border and 93° W. long. This area includes all of the Texas coast and the western portion of the Louisiana coast, and includes NMFS shrimp fishery statistical Zones 17 through 21. The restrictions include prohibitions on the use by shrimp trawlers of: Soft turtle excluder devices (TEDs); try nets with a headrope length greater than 15 ft (4.6 m), unless the try nets are equipped with approved TEDs other than soft TEDs; and a webbing flap that completely covers the escape opening in NMFS-approved top-opening TEDs. This action is based upon a ruling from U.S. District Judge, Southern District of Texas, Galveston Division, in *Center for Marine Conservation* v. *Brown*, No. G–94–660 (S.D. TX, Aug. 1, 1995) in order to facilitate administration and enforcement of the court order.

DATES: This action is effective August 24, 1995 until 30 minutes past sunset (local time) on September 10, 1995. Comments on this action must be submitted by September 26, 1995.

ADDRESSES: Comments on this action and requests for a copy of the supplemental biological opinion (BO) prepared for this action should be addressed to the Chief, Endangered Species Division, Office of Protected Resources, NMFS, 1315 East-West Highway, Silver Spring, MD 20910.

FOR FURTHER INFORMATION CONTACT: Charles A. Oravetz, 813–570–5312, or Phil Williams, 301–713–1401.

SUPPLEMENTARY INFORMATION:

Background

All sea turtles that occur in U.S. waters are listed as either endangered or threatened under the Endangered Species Act of 1973 (ESA). The Kemp's ridley (*Lepidochelys kempii*), leatherback (*Dermochelys coriacea*), and hawksbill (*Eretmochelys imbricata*) are listed as endangered. Loggerhead (*Caretta caretta*) and green (*Chelonia mydas*) turtles are listed as threatened, except for breeding populations of green turtles in Florida and on the Pacific coast of Mexico, which are listed as endangered.

The incidental take and mortality of sea turtles as a result of shrimp trawling activities have been documented in the Gulf of Mexico and along the Atlantic seaboard. Under the ESA and its implementing regulations, taking sea turtles is prohibited, with exceptions set forth at 50 CFR 227.72. The incidental taking of turtles during shrimp trawling in the Gulf and Atlantic Areas (defined in 50 CFR 217.12) is excepted from the taking prohibition, if the sea turtle conservation measures specified in the sea turtle conservation regulations (50 CFR part 227, subpart D) are employed. The regulations require most shrimp trawlers operating in the Gulf and Atlantic Areas to have a NMFS-approved TED installed in each net rigged for fishing, year round.

The conservation regulations provide a mechanism to implement further restrictions of fishing activities, if necessary to avoid unauthorized takings of sea turtles that may be likely to jeopardize the continued existence of listed species or that would violate the terms and conditions of an incidental take statement (ITS) or incidental take permit. Upon a determination that incidental takings of sea turtles during fishing activities are not authorized, additional restrictions may be imposed to conserve listed species and to avoid unauthorized takings that may be likely to jeopardize the continued existence of a listed species. Restrictions may be effective for a period of up to 30 days and may be renewed for additional periods of up to 30 days each (50 CFR 227.72(e)(6)).

Biological Opinion

On November 14, 1994, NMFS issued a BO that concluded that the continued long-term operation of the shrimp fishery in the nearshore waters of the southeastern United States resulting in levels of mortalities observed in 1994 was likely to jeopardize the continued existence of the highly endangered Kemp's ridley and could prevent the recovery of the loggerhead. This BO resulted from an ESA section 7 consultation that was reinitiated in response to the unprecedented number of dead sea turtles that stranded along the coasts of Texas, Louisiana, Georgia, and Florida in the spring and summer of 1994, coinciding with heavy nearshore shrimp trawling activity. Pursuant to section 7(b)(3) of the ESA, NMFS provided a reasonable and prudent alternative to the existing management measures that would allow the shrimp fishery to continue without jeopardizing the continued existence of the Kemp's ridley sea turtle. In addition, the BO was accompanied by an ITS, pursuant to section 7(b)(4)(I) of the ESA, that specifies the impact of such incidental taking on the species. The ITS, establishment of the indicated take levels (ITLs), and development of the Shrimp Fishery/Emergency Response Plan (ERP) as required in the reasonable and prudent alternative of the November 14, 1994, BO have been discussed in previous **Federal Register** publications (60 FR 19885, April 21, 1995, 60 FR 21741, May 3, 1995, 60 FR 26691, May 18, 1995, 60 FR 31696, June 16, 1995, 60 FR 32121, June 20, 1995, and 60 FR 42809, August 17, 1995) and are not repeated here.

Recent Events

Texas Strandings

The waters off Texas were closed to shrimp fishing on May 15, 1995, for the annual closure that is coordinated by State and Federal fisheries managers to allow shrimp to grow larger and therefore more valuable. The closure period is usually marked by low levels of sea turtle strandings, and during the 8 weeks of the 1995 Texas closure, only 15 sea turtle strandings, including two Kemp's ridleys, were reported on offshore Texas beaches.

On July 15, 1995, Texas waters, out to 200 nm (370.6 km) from shore, re-opened to shrimping. The Texas opening produced the expected heavy level of shrimping effort but significantly fewer strandings than were documented in the week following the opening in 1994. There were 18 strandings in 1995 versus 49 in 1994. Most of the strandings occurred in Zones 19 and 20, which had 11 and four, respectively, including three Kemp's ridleys. The strandings in Zones 19 and 20 exceeded the established ITLs of three and two, respectively, while strandings in Zones 17, 18, and 21 remained below the ITLs. Only one turtle stranded in Zone 21, two Kemp's ridleys stranded in Zone 18, and none stranded in Zone 17. During the second week following the Texas re-opening, seven sea turtles stranded on Texas offshore beaches. The three strandings in Zone 20 exceeded the ITL for that Zone, and the four strandings in Zone 19 matched 75 percent of the ITL. No turtles stranded in Zones 18 or 21 or the Texas portion of Zone 17. Again, a total of seven strandings compares favorably with the 30 strandings that occurred in Texas during the second week after the re-opening in 1994. During the third week following the Texas re-opening, strandings remained fairly low statewide, with five turtles, all of which occurred in Zones 19 and 21, where the ITLs were met or exceeded.

Enforcement reports indicated significant improvements in TED deployment in the fleet of shrimp trawlers operating in Texas offshore waters in July 1995. Generally, observed TEDs were properly installed, and floats were being used correctly in bottom-opening hard-grid TEDs. Observed compliance has been very high: Out of 361 boardings conducted by U.S. Coast Guard Group Galveston through July 27, only 7 TED violations were documented, for an observed compliance rate over 98 percent.

Since Texas waters re-opened to shrimping, Coast Guard District Eight Office of Law Enforcement summarized boarding information for NMFS and reported that soft-TED use was much more common in the zones of high strandings. In Zones 19 and 20, soft TEDs were seen on 20 and 34.3 percent, respectively, of the shrimp trawlers boarded, while in Zones 17, 18, and 21, soft TEDs were in use on only 0.0, 1.6, and 9.7 percent, respectively, of the trawlers boarded. Also, 79 percent of the trawlers boarded in Zone 18 were voluntarily using top-opening hard grid TEDs, as had been requested by NMFS. In 1994 and the spring of 1995, Zone 18 had the highest rates of Kemp's ridley strandings in Texas. The two strandings in Zone 18 in the first 2 weeks following the Texas opening, therefore, represents a substantial improvement, related in large part to the voluntary adoption of recommended TED types by shrimpers. However, a relatively large percentage of trawlers operating in Zones 19 and 20, the two zones where stranding levels have been approached or exceeded for two consecutive weeks, are using soft TEDs.

Due to these strandings, NMFS intended to implement emergency restrictions on the shrimp fishery along the entire Texas coast out to 10 nm (18.5 km) identical to those implemented on the shrimp fishery along the coast of Georgia and a portion of South Carolina (60 FR 42809, August 17, 1995), i.e., prohibiting soft TEDs, and requiring hard-grid TEDs in trynets with a headrope length of greater than 12 ft (3.6 m) and a footrope length of greater than 15 ft (4.5 m).

Court Order

On August 1, 1995, the Federal District Court of the Southern District of Texas, Galveston Division, ordered certain gear restrictions, effective from August 3 through September 10, 1995, in *Center for Marine Conservation* v. *Brown*. The court order is effective in all inshore waters and offshore waters out to 12 nm (22.2 km) in NMFS statistical Zones 17 through 21, and includes a prohibition on the use of soft TEDs, a requirement to use hard grid TEDs with trynets with a headrope length greater than 15 ft (4.6 m), and a prohibition on the use of full length webbing flaps completely covering the escape opening. The court further noted that proper flotation, as required by existing sea turtle conservation regulations, must be used on bottom-opening hard TEDs. In

addition, the court allowed shrimpers an additional 10 days, until August 11, 1995, to comply with the order, if they would provide an affidavit stating that they could not comply with the order prior to that date because at the time the order was issued either they were at sea or hard-TEDs were not available.

NMFS issued a press release on August 2, 1995, that announced and described the court order. In addition, NMFS has discussed the order in its weekly reports. NMFS is now implementing this temporary action to implement the court order in regulatory form. While this action was not required by the court, NMFS believes that it will facilitate administration and enforcement of the court order, and provide greater certainty and notice to shrimpers as to the requirements of the order. Specifically, NMFS is applying certain regulatory definitions and terms to this court order. Additionally, with this action, U.S. Coast Guard and NMFS enforcement agents will be able to enforce the requirements of the order as authorized by law. The order was effective August 3, 1995, and this rule is being made effective immediately upon filing with the **Federal Register**.

The court explicitly allowed NMFS to use discretion to take any further action necessary to protect sea turtles in addition to the judicial order. However, at this time, NMFS believes that this action, which mirrors the court order, will be adequate to reduce sea turtle strandings to levels required by the relevant BOs, including those issued November 14, 1994; April 26, 1995; August 8, 1995; and the one accompanying this action. While this action does not include further gear restrictions, it allows NMFS to require owners and operators of shrimp trawlers in Zones 17 to 21 to carry a NMFS-approved observer upon written notification by the Regional Director of NMFS.

Requirements

This action is taken under/authorized by 50 CFR 227.72(e)(6), the exemption for incidental taking of sea turtles in 50 CFR 227.72(e)(1) does not authorize incidental takings during fishing activities if the takings violate the restrictions, terms or conditions of an ITS or incidental take permit, or may be likely to jeopardize the continued existence of a species listed under the ESA. Based on the court ruling in *Center for Marine Conservation* v. *Brown* and the foregoing analysis of relevant factors, the Assistant Administrator for Fisheries (AA) has determined that continued takings of sea turtles by shrimp fishing off Texas and the western portion of Louisiana are unauthorized and therefore takes this action.

All relevant provisions in 50 CFR parts 217 and 227, including the definitions in 50 CFR 217.12 are applicable to this action. For example, § 227.71(b)(3) provides that it is unlawful to fish for or possess fish or wildlife contrary to a restriction specified or issued under § 227.72(e)(3) or (e)(6). Under 50 CFR 217.12, inshore is defined as marine and tidal waters landward of the 72 COLREGS demarcation line (International Regulations for Preventing Collisions at Sea, 1972), as depicted or noted on nautical charts published by NOAA (Coast Charts, 1:80,000 scale) and as described in 33 CFR part 80, and offshore is defined as marine and tidal waters seaward of the 72 COLREGS demarcation line.

NMFS hereby notifies owners and operators of shrimp trawlers (as defined in 50 CFR 217.12) that from August 24, 1995 until 30 minutes past sunset (local time) on September 10, 1995, fishing by shrimp trawlers in all inshore waters and offshore waters seaward to 12 nm (22.2 km) from the COLREGS line along the coast of Texas between the United States-Mexico border through the western portion of Louisiana coast to 93° W. long. (Zones 17 through 21), shall be in compliance with all applicable provisions of 50 CFR 227.72(e) except as modified below:

1. The use of soft TEDs described in 50 CFR 227.72(e)(4)(iii) is prohibited.

2. The use of try nets with a headrope length greater than 15 ft (4.6 m), is prohibited, unless the try nets are equipped with a NMFS-approved hard TED or special hard TED (described in 50 CFR 227.72(e)(4)(ii)). Try nets with a headrope length of 15 ft (4.6 m) or less remain exempt from the requirement to have a TED installed in accordance with 50 CFR 227.72(e)(2)(ii)(B)(*1*).

3. Use of a webbing flap that completely covers the escape opening in NMFS-approved top-opening TEDs is prohibited. Any webbing that is attached to the trawl forward of the escape opening, must be cut to a length so that the tailing edge of such webbing is at least (5.1 cm) forward of the posterior edge of the TED grid (see Figure 1.).

All provisions of 50 CFR 227.72(e), including, but not limited to 50 CFR 227.72(e)(2)(ii)(B)(*1*) (use of try nets), and 50 CFR 227.72(e)(4)(iii) (Soft TEDs), that are inconsistent with these prohibitions are hereby suspended for the duration of this action.

NMFS hereby notifies owners and operators of shrimp trawlers in the area subject to restrictions that they are required to carry a NMFS-approved observer aboard such vessel(s) if directed to do so by the Regional Director, upon written notification sent to either the address specified for the vessel registration or documentation purposes, or otherwise served on the owner or operator of the vessel. Owners and operators and their crew must comply with the terms and conditions specified in such written notification.

Additional Conservation Measures

In issuing its order in *Center for Marine Conservation* v. *Brown*), the court explicitly stated that NMFS may impose any additional restrictions if NMFS deems appropriate. Notification of any additional sea turtle conservation measures, including any extension or modification of this 30-day action, will be published in the **Federal Register** pursuant to 50 CFR 227.72(e)(6).

NMFS will continue to monitor sea turtle strandings to gauge the effectiveness of these conservation measures. If, after these restrictions are instituted, strandings in Texas or affected areas of Louisiana persist at or above 75 percent of the ITL for 2 weeks, NMFS will determine whether to restrict or prohibit fishing by some or all shrimp trawlers, as required, in the inshore and offshore waters of all or parts of NMFS statistical Zones 17 through 21 seaward to 12 nm (22.2 km) from the COLREGS line. Contiguous statistical zones or portions of those zones may be included in the restrictions or closure, as necessary. Expansion of gear restrictions will also be considered as a measure to control sea turtle strandings. Area closures or additional gear restrictions will be implemented through emergency rulemaking notification(s) pursuant to the procedures set forth at 50 CFR 227.72(e)(6).

Classification

This action has been determined to be not significant for purposes of E.O. 12866.

Because neither section 553 of the Administrative Procedure Act (APA), nor any other law requires that general notification of proposed rulemaking be published for this action, under section 603(b) of the Regulatory Flexibility Act, an initial Regulatory Flexibility Analysis is not required.

Pursuant to section 553(b)(B) of the APA, the AA finds that there is good cause to waive prior notice and opportunity to comment on this rule. It is unnecessary, impracticable and contrary to the public interest to provide prior notification and opportunity for comment, because the requirements of this action are already in effect as a result of the court order issued on August 1, 1995. Furthermore, regulatory implementation of the court order will facilitate its administration and enforcement and will assist shrimpers to comply with the order. Therefore, this action should not be delayed. Last, by facilitating compliance with the court order, this action will likely mitigate adverse impacts on sea turtles.

Pursuant to section 553(d) of the APA, the AA finds that there is good cause to waive the 30-day delay in effective date. As stated above, the requirements of this action are already in effect pursuant to the court order.

The AA prepared an EA for the final rule (57 FR 57348, December 4, 1992) requiring TED use in shrimp trawls and establishing the 30-day notice procedures. Copies of the EA are available (see **ADDRESSES**).

Dated: August 23, 1995.

Nancy Foster,

Deputy Administrator for Fisheries, National Marine Fisheries Service.

BILLING CODE 3510–22–F

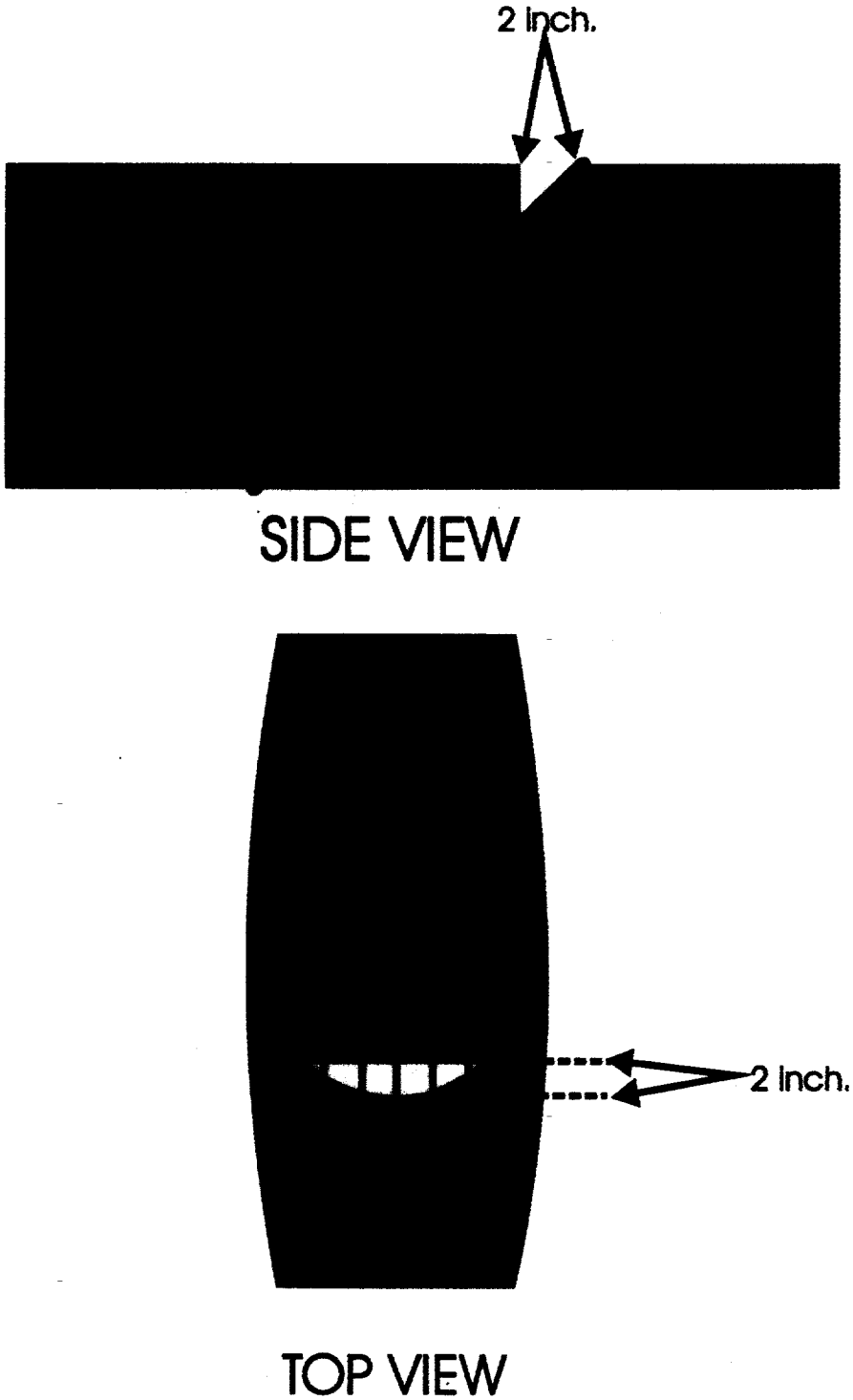

FIGURE 1--SHORTENED WEBBING OVER THE ESCAPE OPENING COMPLYING WITH REQUIREMENT NUMBER 3 OF THIS ACTION.

[FR Doc. 95–21401 Filed 8–24–95; 2:06 pm]
BILLING CODE 3510–22–C

Proposed Rules

Federal Register
Vol. 60, No. 167
Tuesday, August 29, 1995

This section of the FEDERAL REGISTER contains notices to the public of the proposed issuance of rules and regulations. The purpose of these notices is to give interested persons an opportunity to participate in the rule making prior to the adoption of the final rules.

DEPARTMENT OF AGRICULTURE

Animal and Plant Health Inspection Service

9 CFR Part 94

[Docket No. 95–055–1]

Change in Disease Status of Germany Because of Swine Vesicular Disease

AGENCY: Animal and Plant Health Inspection Service, USDA.

ACTION: Proposed rule.

SUMMARY: We are proposing to declare Germany free of swine vesicular disease. As part of this proposed action, we would add Germany to the list of countries that, although declared free of swine vesicular disease, are subject to restrictions on pork and pork products offered for importation into the United States. Declaring Germany free of swine vesicular disease appears to be appropriate because there have been no confirmed outbreaks of swine vesicular disease in Germany since 1981. This proposed rule would relieve certain restrictions on the importation of pork and pork products into the United States from Germany. However, because Germany shares common land borders with countries affected by swine vesicular disease, imports pork products from countries affected by swine vesicular disease, and is still considered to be affected with hog cholera, the importation into the United States of pork and pork products from Germany would continue to be restricted.

DATES: Consideration will be given only to comments received on or before October 30, 1995.

ADDRESSES: Please send an original and three copies of your comments to Docket No. 95–055–1, Regulatory Analysis and Development, PPD, APHIS, suite 3C03, 4700 River Road Unit 118, Riverdale, MD 20737–1238. Please state that your comments refer to Docket No. 95–055–1. Comments received may be inspected at USDA, room 1141, South Building, 14th Street and Independence Avenue SW., Washington, DC, between 8 a.m. and 4:30 p.m., Monday through Friday, except holidays. Persons wishing to inspect comments are requested to call ahead on (202) 690–2817 to facilitate entry into the comment reading room.

FOR FURTHER INFORMATION CONTACT: Dr. John Cougill, Staff Veterinarian, Import/Export Products, National Center for Import and Export, VS, APHIS, 4700 River Road Unit 40, Riverdale, MD 20737–1231, (301) 734–8695.

SUPPLEMENTARY INFORMATION:

Background

The regulations in 9 CFR part 94 (referred to below as the regulations) govern the importation into the United States of specified animals and animal products in order to prevent the introduction into the United States of various animal diseases, including rinderpest, foot-and-mouth disease (FMD), bovine spongiform encephalopathy, African swine fever, hog cholera, and swine vesicular disease (SVD). These are dangerous and destructive communicable diseases of ruminants and swine.

Section 94.12(a) of the regulations provides that SVD is considered to exist in all countries of the world except those listed in § 94.12(a), which have been declared to be free of SVD. We will consider declaring a country to be free of SVD if there have been no reported cases of the disease in that country for at least the previous 1-year period. The last case of SVD in Germany that was confirmed by laboratory procedures occurred in 1981. Clinical symptoms similar to SVD were recognized in a herd in Germany in 1985, and that case was reported as SVD by the Regional Veterinary Officer in Germany, but laboratory tests failed to confirm SVD. There have been no reports of SVD in Germany since that time. Based on Germany's apparent current and recent freedom from SVD, the Government of Germany has requested that the U.S. Department of Agriculture (USDA) recognize Germany to be free of SVD.

The Animal and Plant Health Inspection Service (APHIS) reviewed the documentation submitted by the Government of Germany in support of its request. A team of APHIS officials traveled to Germany in September 1993 to conduct an on-site evaluation of the country's animal health program with regard to the foot-and-mouth disease (FMD) and rinderpest situation in Germany. The evaluation consisted of a review of Germany's veterinary services, laboratory and diagnostic procedures, vaccination practices, and administration of laws and regulations intended to prevent the introduction of FMD and rinderpest into Germany. We believe that the 1993 on-site evaluation was sufficient to provide APHIS with a complete picture of Germany's animal health program with regard to SVD, as well. Therefore, we have used the findings of the 1993 on-site evaluation as part of the basis for this proposed rule. (Details concerning the 1993 on-site evaluation are available upon written request from the person listed under **FOR FURTHER INFORMATION CONTACT.**)

Based on the information discussed above, we are proposing to amend § 94.12(a) by adding Germany to the list of countries declared free of SVD. This action would relieve certain requirements on the importation of pork and pork products from Germany.

However, we are also proposing to amend § 94.13(a) by adding Germany to the list of countries that have been declared free of SVD, but from which the importation of pork and pork products is restricted. The countries listed in § 94.13(a) are subject to these restrictions because they: (1) Supplement their national pork supply by importing fresh, chilled, or frozen pork from countries where SVD is considered to exist; (2) have a common border with countries where SVD is considered to exist; or (3) have certain trade practices that are less restrictive than are acceptable to the United States.

Germany supplements its national pork supply by importing fresh, chilled, and frozen pork from countries where SVD is considered to exist. In addition, Germany has common land borders with Belgium, Czechoslovakia, France, the Netherlands, and Poland. These countries are designated in § 94.12(a) as countries where SVD exists. As a result, even though Germany appears to qualify for designation as a country free of SVD, there is potential for pork and pork products produced in Germany to be commingled with the fresh, chilled, or frozen meat of animals from a country where SVD exists. This potential for commingling constitutes an undue risk

of introducing SVD into the United States.

Therefore, we are proposing that pork and pork products, as well as any ship's stores, airplane meals, and baggage containing such pork, offered for importation into the United States from Germany be subject to the restrictions specified in § 94.13 of the regulations and to the applicable requirements contained in the regulations of the USDA's Food Safety and Inspection Service at 9 CFR chapter III. Section 94.13 requires, in part, that pork and pork products be: (1) Prepared in an inspected establishment that is eligible to have its products imported into the United States under the Federal Meat Inspection Act; and (2) accompanied by a foreign meat inspection certificate as well as a certification issued by a full-time salaried veterinary official of the national government of the exporting country, stating that certain precautions have been satisfied so that the pork or pork product has not been commingled with or exposed to animals, pork, or pork products originating in, or transported through, a country in which SVD is considered to exist.

Because hog cholera exists in Germany, the importation of pork and pork products from Germany would continue to be subject to the restrictions in § 94.9 for pork and pork products from countries where hog cholera exists. The importation of live swine, except for wild swine, from Germany would continue to be prohibited due to hog cholera, in accordance with § 94.10.

Executive Order 12866 and Regulatory Flexibility Act.

This proposed rule has been reviewed under Executive Order 12866. For this action, the Office of Management and Budget has waived its review process required by Executive Order 12866.

This proposed rule would amend the regulations in part 94 by adding Germany to the list of countries that have been declared free of SVD. This action would relieve certain restrictions on the importation of pork and pork products into the United States from Germany. However, other requirements would continue to restrict the importation of live swine and pork and pork products.

Because of the continued presence of hog cholera in Germany, nearly all of the current U.S. restrictions on the importation of pork and pork products would remain unchanged. The only area of pork importation that may be affected should Germany be declared free of SVD is cured and dried pork imports. A lengthy curing and drying period is required at present for pork and pork products originating from countries with SVD (see 9 CFR 94.17). The restriction for hog cholera is much shorter, requiring that the meat be thoroughly cured and fully dried for a period of not less than 90 days so that the product is shelf stable without refrigeration (see 9 CFR 94.9).

A shorter and less costly curing and drying period for pork and pork products could lead to Germany's increased participation in the U.S. market, depending on the competitiveness of the market for imported cured and dried pork and pork products. However, the impact for U.S. importers and consumers is not expected to be significant. In the fiscal year 1993–94, Germany exported 232 tons of prepared or preserved pork to the United States, which amounted to only 0.25 percent of the total quantity imported into the United States. The effect of this proposed rule on U.S. domestic prices or supplies or on U.S. businesses, including small entities, is expected to be negligible.

Under these circumstances, the Administrator of the Animal and Plant Health Inspection Service has determined that this action would not have a significant economic impact on a substantial number of small entities.

Executive Order 12778

This proposed rule has been reviewed under Executive Order 12778, Civil Justice Reform. If this proposed rule is adopted: (1) All State and local laws and regulations that are inconsistent with this rule will be preempted; (2) no retroactive effect will be given to this rule; and (3) administrative proceedings will not be required before parties may file suit in court challenging this rule.

Paperwork Reduction Act

In accordance with the Paperwork Reduction Act of 1980 (44 U.S.C. 3501 *et seq.*), the information collection or recordkeeping requirements included in this proposed rule have been approved by the Office of Management and Budget (OMB), and there are no new requirements. The assigned OMB control number is 0579–0015.

List of Subjects in 9 CFR Part 94

Animal diseases, Imports, Livestock, Meat and meat products, Milk, Poultry and poultry products, Reporting and recordkeeping requirements.

Accordingly, 9 CFR part 94 would be amended as follows:

PART 94—RINDERPEST, FOOT-AND-MOUTH DISEASE, FOWL PEST (FOWL PLAGUE), VELOGENIC VISCEROTROPIC NEWCASTLE DISEASE, AFRICAN SWINE FEVER, HOG CHOLERA, AND BOVINE SPONGIFORM ENCEPHALOPATHY: PROHIBITED AND RESTRICTED IMPORTATIONS

1. The authority citation for part 94 would continue to read as follows:

Authority: 7 U.S.C. 147a, 150ee, 161, 162, and 450; 19 U.S.C. 1306; 21 U.S.C. 111, 114a, 134a, 134b, 134c, 134f, 136, and 136a; 31 U.S.C. 9701; 42 U.S.C. 4331, and 4332; 7 CFR 2.17, 2.51, and 371.2(d).

§ 94.12 [Amended]

2. In § 94.12, paragraph (a) would be amended by adding ''Germany,'' immediately after ''Finland,''.

§ 94.13 [Amended]

3. In § 94.13, the introductory text, the first sentence would be amended by adding ''Germany,'' immediately after ''Denmark,''.

Done in Washington, DC, this 22nd day of August 1995.

Lonnie J. King,

Administrator, Animal and Plant Health Inspection Service.

[FR Doc. 95–21288 Filed 8–28–95; 8:45 am]

BILLING CODE 3410–34–P

DEPARTMENT OF HEALTH AND HUMAN SERVICES

Food and Drug Administration

21 CFR Part 101

[Docket No. 95P–0003]

Food Labeling: Health Claims; Sugar Alcohols and Dental Caries; Correction

AGENCY: Food and Drug Administration, HHS.

ACTION: Proposed rule; correction.

SUMMARY: The Food and Drug Administration (FDA) is correcting a proposed rule that appeared in the **Federal Register** of July 20, 1995 (60 FR 37507). The document proposed to authorize the use, on food labels and in food labeling, of health claims on the association between sugar alcohols and the nonpromotion of dental caries and to exempt sugar alcohol-containing foods from certain provisions of the health claims general requirements regulation. The document was published with some errors. This document corrects those errors.

DATES: Written comments by October 3, 1995. The agency is proposing that any

final rule that may issue based upon this proposal become effective 30 days following its publication.

FOR FURTHER INFORMATION CONTACT: Joyce J. Saltsman, Center for Food Safety and Applied Nutrition (HFS–165), Food and Drug Administration, 200 C St. SW., Washington, DC 20204, 202–205–5916.

In FR Doc. 95–17505, appearing on page 37507 in the **Federal Register** of Thursday, July 20, 1995, the following corrections are made:

1. On page 37510, in the second column, in the first paragraph, in line 6, the phrase ''and the FASEB'' is corrected to read ''of FASEB''.

2. On page 37511, in the first column, in the fourth paragraph, in the sixth line from the bottom of the paragraph, ''the 30-min (min) test'' is corrected to read ''the 30-minute (min) test''.

3. On page 37513, in the second column, in the first full paragraph, in line 20, the phrase ''just before to clinic visits.'' is corrected to read ''just before clinic visits.''

4. On page 37514, in the second column, in the second paragraph, in line 12, the phrase ''front of maxillary and'' is corrected to read ''front maxillary and''.

5. On page 37515, in the second column, in the first full paragraph, in line 7, the phrase ''whose parents consumed'' is corrected to read ''who consumed''.

6. On page 37520, in the second column, in the last paragraph, in line 1, the phrase ''In its March 1979, review'' is corrected by removing the comma after the date.

7. On page 37521, in the second column, in the second paragraph, in line 1, the phrase ''In its August 1979, review'' is corrected by removing the comma after the date.

8. On page 37527, in the third column, in reference 21, the name ''Bánózcy'' is corrected to read ''Bánóczy''.

9. On page 37529, in the first column, in reference 73, the word ''Carigenicity'' is corrected to read ''Cariogenicity''.

§ 101.80 [Corrected]

10. On page 37530, in the first column, in § 101.80 *Health claims: dietary sugar alcohols and dental caries*, in paragraph (c)(2)(i)(D), the phrase ''paragraph (C) of this section.'' is corrected to read ''paragraph (c)(2)(i)(C) of this section.''

Dated: August 23, 1995.

William K. Hubbard,

Acting Deputy Commissioner for Policy.

[FR Doc. 95–21381 Filed 8–28–95; 8:45 am]

BILLING CODE 4160–01–F

21 CFR Parts 310 and 341

[Docket No. 95N–0205]

Rin 0905–AA06

Cold, Cough, Allergy, Bronchodilator, and Antiasthmatic Drug Products for Over-the-Counter Human Use; Proposed Amendment of Monograph for OTC Bronchodilator Drug Products; Extension of Comment Period

AGENCY: Food and Drug Administration, HHS.

ACTION: Notice of proposed rulemaking; extension of comment period.

SUMMARY: The Food and Drug Administration (FDA) is extending to September 27, 1995, the period for comments for the notice of proposed rulemaking to amend the monograph for over-the-counter (OTC) bronchodilator drug products that was published in the **Federal Register** of July 27, 1995. That document proposed to remove the ingredients ephedrine, ephedrine hydrochloride, ephedrine sulfate, and racephedrine hydrochloride from the final monograph for OTC bronchodilator drug products and to classify these ingredients as not generally recognized as safe and effective for OTC use. FDA is taking this action in response to several requests to extend the period for comments to allow interested persons adequate time to assess and respond to the proposal.

DATES: Written comments by September 27, 1995.

ADDRESSES: Submit written comments to the Dockets Management Branch (HFA–305), Food and Drug Administration, rm. 1–23, 12420 Parklawn Dr., Rockville, MD 20857.

FOR FURTHER INFORMATION CONTACT: William E. Gilbertson, Center for Drug Evaluation and Research (HFD–810), Food and Drug Administration, 5600 Fishers Lane, Rockville, MD 20857, 301–594–5000.

SUPPLEMENTARY INFORMATION: In the **Federal Register** of July 27, 1995 (60 FR 38643), FDA published a notice of proposed rulemaking to amend the final monograph for OTC bronchodilator drug products to remove the ingredients ephedrine, ephedrine hydrochloride, ephedrine sulfate, and racephedrine hydrochloride and to classify these ingredients as not generally recognized as safe and effective for OTC use. Interested persons were given until August 28, 1995 to submit comments on the proposal.

In the proposal, the agency indicated that these ingredients should no longer be included in the final monograph for OTC bronchodilator drug products based on their extensive use in illicit drug manufacture and their potential for causing harm as a result of misuse and abuse. This proposed amendment to the monograph, if finalized, would remove these ingredients from the OTC market whether present as single ingredient products or in combination with other cough-cold ingredients.

FDA has received requests from a manufacturers' association and two manufacturers of OTC bronchodilator drug products to extend the comment period until October 27, 1995, to permit adequate development of comments by industry and other interested parties. The requests stated that the extension is necessary because of the summer vacation season and the inability to develop a responsive submission in 30 days as provided in the proposed monograph amendment.

One comment indicated that FDA's action could set a precedent for the agency to take action later concerning OTC drug products containing pseudoephedrine and phenylpropanolamine, which are also included in the Domestic Chemical Diversion Control Act of 1993 as ≥listed chemicals≥ used as precursors in the clandestine manufacture of methamphetamine and metcathinone. The comment added that because the proposed amendment to the monograph could have profound implication on the entire OTC drug industry, additional time to comment is necessary to evaluate the legal and policy implications for companies who make products containing pseudoephedrine and/or phenylpropanolamine.

FDA emphasizes that this proposal affects ephedrine ingredients only. The proposed amendment does not affect the current OTC marketing status of pseudoephedrine or phenylpropanolamine in any manner. However, because of the comment's concerns that the proposal may have a potential future impact on the OTC drug industry, the agency wants to allow additional time for interested persons and manufacturers to more fully express their views. However, because of the continuing misuse and abuse of OTC ephedrine drug products, the agency has determined that the additional period shall be 30 days only. Therefore, the agency is providing an extension of the period for comments until September 27, 1995.

Interested persons may, on or before September 27, 1995, submit to the Dockets Management Branch (address above) written comments on the proposed monograph amendment.

Three copies of any comments are to be submitted, except that individuals may submit one copy. Comments are to be identified with the docket number found in brackets in the heading of this document. Received comments may be seen in the office above between 9 a.m. and 4 p.m., Monday through Friday.

Dated: August 24, 1995.

Ronald G. Chesemore,

Associate Commissioner for Regulatory Affairs.

[FR Doc. 95–21480 Filed 8–25–95; 11:05 am]

BILLING CODE 4160–01–F

DEPARTMENT OF THE TREASURY

Internal Revenue Service

26 CFR Part 40

[PS–8–95]

RIN 1545–AT25

Deposits of Excise Taxes

AGENCY: Internal Revenue Service (IRS), Treasury.

ACTION: Notice of proposed rulemaking by cross-reference to temporary regulations.

SUMMARY: In the Rules and Regulations section of this issue of the **Federal Register**, the IRS is issuing temporary regulations relating to deposits of excise taxes. The text of those temporary regulations also serves as the text of these proposed regulations.

DATES: Written comments and requests for a public hearing must be received by November 27, 1995.

ADDRESSES: Send submissions to: CC:DOM:CORP:T:R (PS–8–95), room 5228, Internal Revenue Service, POB 7604, Ben Franklin Station, Washington, DC 20044. In the alternative, submissions may be hand delivered between the hours of 8 a.m. and 5 p.m. to: CC:DOM:CORP:T:R (PS–8–95), Courier's Desk, Internal Revenue Service, 1111 Constitution Avenue NW., Washington, DC.

FOR FURTHER INFORMATION CONTACT: Concerning submissions, the Regulations Unit, (202) 622–7180; concerning the regulations, Ruth Hoffman, (202) 622–3130 (not toll-free numbers).

SUPPLEMENTARY INFORMATION:

Background

Temporary regulations in the Rules and Regulations section of this issue of the **Federal Register** amend the Excise Tax Procedural Regulations (26 CFR part 40) relating to deposits of excise taxes under section 6302. The temporary regulations contain special safe harbor rules for the additional deposit of taxes due in September of each year.

The text of those temporary regulations also serves as the text of these proposed regulations. The preamble to the temporary regulations explains the temporary regulations.

Special Analyses

It has been determined that this notice of proposed rulemaking is not a significant regulatory action as defined in EO 12866. Therefore, a regulatory assessment is not required. It also has been determined that section 553(b) of the Administrative Procedure Act (5 U.S.C. chapter 5) and the Regulatory Flexibility Act (5 U.S.C. chapter 6) do not apply to these regulations, and, therefore, a Regulatory Flexibility Analysis is not required. Pursuant to section 7805(f) of the Internal Revenue Code, this notice of proposed rulemaking will be submitted to the Chief Counsel for Advocacy of the Small Business Administration for comment on its impact on small business.

Comments and Requests for a Public Hearing

Before these proposed regulations are adopted as final regulations, consideration will be given to any written comments (a signed original and eight (8) copies) that are submitted timely to the IRS. All comments will be available for public inspection and copying. A public hearing may be scheduled if requested in writing by any person that timely submits written comments. If a public hearing is scheduled, notice of the date, time and place for the hearing will be published in the **Federal Register.**

Drafting Information

The principal author of these regulations is Ruth Hoffman, Office of Assistant Chief Counsel (Passthroughs and Special Industries). However, other personnel from the IRS and Treasury Department participated in their development.

List of Subjects in 26 CFR Part 40

Excise taxes, Reporting and recordkeeping requirements.

Proposed Amendments to the Regulations

Accordingly, 26 CFR part 40 is proposed to be amended as follows:

PART 40—EXCISE TAX PROCEDURAL REGULATIONS

Paragraph 1. The authority citation for part 40 continues to read in part as follows:

Authority: 26 U.S.C. 7805 * * *

Par. 2. Section 40.6302(c)–5 is added to read as follows:

§ 40.6302(c)–5 Use of Government depositaries; rules under sections 6302(e) and (f).

[The text of this proposed section is the same as the text of § 40.6302(c)–5T published elsewhere in this issue of the **Federal Register**.]

Margaret Milner Richardson.

Commissioner of Internal Revenue.

[FR Doc. 95–21439 Filed 8–28–95; 8:45 am]

BILLING CODE 4830–01–U

DEPARTMENT OF JUSTICE

28 CFR Part 16

[AAG/A Order No. 107–95]

Exemption of Records System Under the Privacy Act

AGENCY: Department of Justice.

ACTION: Proposed rule.

SUMMARY: The Department of Justice proposes to exempt a Privacy Act system of records from subsections (c)(3) and (4), (d), (e)(1), (2), (3), (5), and (8), and (g) of the Privacy Act, 5 U.S.C. 552a. This system of records is the ''Bureau of Prisons, Office of Internal Affairs Investigative Records, Justice/BOP–012.'' Information in this system relates to official Federal investigations and law enforcement matters of the Office of Internal Affairs (OIA) of the Federal Bureau of Prisons (BOP), pursuant to the Inspector General Act of 1978, 5 U.S.C. App., as amended by the Inspector General Act amendments of 1988. The exemptions are necessary to avoid interference with the law enforcement functions of the BOP. Specifically, the exemptions are necessary to prevent subjects of investigations from frustrating the investigatory process; to preclude the disclosure of investigative techniques; to protect the identities and physical safety of confidential informants and of law enforcement personnel; to ensure OIA's ability to obtain information from information sources; to protect the privacy of third parties; and to safeguard classified information as required by Executive Order 12356.

DATES: Submit any comments by September 28, 1995.

ADDRESSES: Address all comments to Patricia E. Neely, Program Analyst, Systems Policy Staff, Justice Management Division, Department of Justice, Washington, DC 20530 (Room 850, WCTR Building).

FOR FURTHER INFORMATION CONTACT: Patricia E. Neely 202–616–0178.

SUPPLEMENTARY INFORMATION: In the notice section of today's **Federal Register**, the Department of Justice provides a description of the ''Bureau of Prisons, Office of Internal Affairs Investigative Records, JUSTICE/BOP–012.''

This order relates to individuals rather than small business entities. Nevertheless, pursuant to the requirements of the Regulatory Flexibility Act, 5 U.S.C. 601–612, it is hereby stated that the order will not have ''a significant economic impact on a substantial number of small entities.''

List of Subject in Part 16

Administrative Practices and Procedures, Courts, Freedom of Information Act, Government in the Sunshine Act, and the Privacy Act.

Pursuant to the authority vested in the Attorney General by 5 U.S.C. 552a and delegated to me by Attorney General Order No. 793–78, it is proposed to amend 28 CFR part 16 by amending § 16.97, as set forth below.

Dated: August 15, 1995.

Stephen R. Colgate,

Assistant Attorney General for Administration.

1. The authority for part 16 continues to read as follows:

Authority: 5 U.S.C. 301, 552, 552a, 552b(g), 553; 18 U.S.C. 4203(a)(1); 28 U.S.C. 509, 510, 534; 31 U.S.C. 3717, 9701.

2. It is proposed to amend 28 CFR 16.97 by adding paragraphs (g) and (h) to read as follows:

16.97 Exemption of the Federal Bureau of Prisons Systems-Limited Access.

* * * * *

(g) The following system of records is exempt pursuant to the provisions of 5 U.S.C. 552a(j)(2) from subsections (c)(3) and (4), (d), (e)(1), (2), (3), (5) and (8) and (g) of 5 U.S.C. 552a. In addition, the following system of records is exempt pursuant to the provisions of 5 U.S.C. 552a(k)(1) and (k)(2) from subsections (c)(3), (d), and (e)(1) of 5 U.S.C. 552a:

Bureau of Prisons, Office of Internal Affairs Investigative Records, JUSTICE/BOP–012.

(h) These exemptions apply only to the extent that information in this system is subject to exemption pursuant to 5 U.S.C. 552a(j)(2), (k)(1), and (k)(2). Where compliance would not appear to interfere with or adversely affect the law enforcement process, and/or where it may be appropriate to permit individuals to contest the accuracy of the information collected, e.g., public source materials, the applicable exemption may be waived, either partially or totally, by the Office of Internal Affairs (OIA). Exemptions from the particular subsections are justified for the following reasons:

(1) From subsection (c)(3) because release of disclosure accounting could alert the subject of an investigation of an actual or potential criminal, civil, or regulatory violation to the existence of the investigation and the fact that they are subjects of the investigation, and reveal investigative interest by not only the OIA but also by the recipient agency. Since release of such information to the subjects of an investigation would provide them with significant information concerning the nature of the investigation, release could result in activities that would impede or compromise law enforcement such as: the destruction of documentary evidence; improper influencing of witnesses; endangerment of the physical safety of confidential sources, witnesses, and law enforcement personnel; fabrication of testimony; and flight of the subject from the area. In addition, release of disclosure accounting could result in the release of properly classified information which could compromise the national defense or disrupt foreign policy.

(2) From subsection (c)(4) because this system is exempt from the access provisions of subsection (d) pursuant to subsections (j) and (k) of the Privacy Act.

(3) From the access and amendment provisions of subsection (d) because access to the records contained in this system of records could provide the subject of an investigation with information concerning law enforcement activities such as that relating to an actual or potential criminal, civil or regulatory violation; the existence of an investigation; the nature and scope of the information and evidence obtained as to his activities; the identity of confidential sources, witnesses, and law enforcement personnel; and information that may enable the subject to avoid detection or apprehension. Such disclosure would present a serious impediment to effective law enforcement where they prevent the successful completion of the investigation; endanger the physical safety of confidential sources, witnesses, and law enforcement personnel; and/or lead to the improper influencing of witnesses, the destruction of evidence, or the fabrication of testimony. In addition, granting access to such information could disclose security-sensitive or confidential business information or information that would constitute an unwarranted invasion of the personnel privacy of third parties. Finally, access to the records could result in the release of properly classified information which could compromise the national defense or disrupt foreign policy. Amendment of the records would interfere with ongoing investigations and law enforcement activities and impose an impossible administrative burden by requiring investigations to be continuously reinvestigated.

(4) From subsection (e)(1) because the application of this provision could impair investigations and interfere with the law enforcement responsibilities of the OIA for the following reasons:

(i) It is not possible to detect relevance or necessity of specific information in the early stages of a civil, criminal or other law enforcement investigation, case, or matter, including investigations in which use is made of properly classified information. Relevance and necessity are questions of judgment and timing, and it is only after the information is evaluated that the relevance and necessity of such information can be established.

(ii) During the course of any investigation, the OIA may obtain information concerning actual or potential violations of laws other than those within the scope of its jurisdiction. In the interest of effective law enforcement, the OIA should retain this information as it may aid in establishing patterns of criminal activity, and can provide valuable leads for Federal and other law enforcement agencies.

(iii) In interviewing individuals or obtaining other forms of evidence during an investigation, information may be supplied to an investigator which relates to matters incidental to the primary purpose of the investigation but which may relate also to matters under the investigative jurisdiction of another agency. Such information cannot readily be segregated.

(5) From subsection (e)(2) because, in some instances, the application of this provision would present a serious impediment to law enforcement for the following reasons:

(i) The subject of an investigation would be placed on notice as to the existence of an investigation and would therefore be able to avoid detection or apprehension, to improperly influence witnesses, to destroy evidence, or to fabricate testimony.

(ii) In certain circumstances the subject of an investigation cannot be required to provide information to investigators, and information relating to a subject's illegal acts, violations of rules of conduct, or any other misconduct must be obtained from other sources.

(iii) In any investigation it is necessary to obtain evidence from a variety of sources other than the subject of the investigation in order to verify the evidence necessary for successful litigation.

(6) From subsection (e)(3) because the application of this provision would provide the subject of an investigation with substantial information which could impede or compromise the investigation. Providing such notice to a subject of an investigation could interfere with an undercover investigation by revealing its existence, and could endanger the physical safety of confidential sources, witnesses, and investigators by revealing their identities.

(7) From subsection (e)(5) because the application of this provision would prevent the collection of any data not shown to be accurate, relevant, timely, and complete at the moment it is collected. In the collection of information for law enforcement purposes, it is impossible to determine in advance what information is accurate, relevant, timely, and complete. Material which may seem unrelated, irrelevant, or incomplete when collected may take on added meaning or significance as an investigation progresses. The restrictions of this provision could interfere with the preparation of a complete investigation report, and thereby impede effective law enforcement.

(8) From subsection (e)(8) because the application of this provision could prematurely reveal an ongoing criminal investigation to the subject of the investigation, and could reveal investigation techniques, procedures, and/or evidence.

(9) From subsection (g) to the extent that this system is exempt from the access and amendment provisions of subsection (d) pursuant to subsections (j)(2), (k)(1) and (k)(2) of the Privacy Act.

[FR Doc. 95–21342 Filed 8–28–95; 8:45 am]

BILLING CODE 4410–05–M

ENVIRONMENTAL PROTECTION AGENCY

40 CFR Parts 51 and 93

[FRL–5284–5]

RIN 2060–AF95

Transportation Conformity Rule Amendments: Miscellaneous Revisions

AGENCY: Environmental Protection Agency (EPA).

ACTION: Proposed rule.

SUMMARY: EPA proposes in this action to make several changes to its current regulation requiring certain transportation actions to conform to the state's air quality plan. This action proposes to amend the November 24, 1993, transportation conformity rule in order to allow transportation control measures (TCMs) to proceed even if the conformity status of the transportation plan and program has lapsed, provided the TCM is included in an approved state implementation plan or federal implementation plan and was included in a previously conforming transportation plan and program. Such TCMs would be halted under the existing transportation conformity rule should a conformity lapse occur.

This proposal would also extend the grace period before which areas must determine conformity to a submitted control strategy implementation plan. This extension would provide relief most immediately to some moderate and above ozone nonattainment areas, for which conformity otherwise would lapse on November 15, 1995, should such areas fail to demonstrate conformity.

This action proposes to align the date of conformity lapse with the date of application of Clean Air Act highway sanctions for any failure to submit or submission of an incomplete control strategy state implementation plan (SIP).

This proposal would also correct the nitrogen oxides (NO_X) provisions of the transportation conformity rule consistent with previous commitments made by EPA in **Federal Register** notices concerning transportation conformity NO_X waivers. This proposal to change the statutory authority for NO_X waivers is also published as an interim final rule in the final rule section of today's **Federal Register**, and is effective immediately.

Finally, this action proposes to establish a grace period before which transportation plan and program conformity must be determined in newly designated nonattainment areas; clarify certain wording; and make certain technical corrections.

EPA proposes that a transportation conformity SIP revision consistent with these amendments would be required to be submitted to EPA by 12 months following the date of publication of the final rule.

DATES: Comments on this action must be received by September 28, 1995.

ADDRESSES: Interested parties may submit written comments (in duplicate, if possible) to: Air and Radiation Docket and Information Center, U.S. Environmental Protection Agency, Attention: Docket No. A–95–05, 401 M Street, S.W., Washington, DC 20460.

Materials relevant to this proposal have been placed in Public Docket A–95–05 by EPA. The docket is located at the above address in room M–1500 Waterside Mall (ground floor) and may be inspected from 8 a.m. to 4 p.m., Monday through Friday, including all non-government holidays.

FOR FURTHER INFORMATION CONTACT: Kathryn Sargeant, Emission Control Strategies Branch, Emission Planning and Strategies Division, U.S. Environmental Protection Agency, 2565 Plymouth Road, Ann Arbor, MI 48105. (313) 668–4441.

SUPPLEMENTARY INFORMATION: The contents of this preamble are listed in the following outline:

I. Background on Transportation Conformity Rule
II. Transportation Control Measures (TCMs)
III. Requirement to Redetermine Conformity to Submitted Control Strategy SIP
IV. Grace Period for Use of Submitted Motor Vehicle Emissions Budgets
V. Alignment With Clean Air Act Highway Sanctions
VI. Applicability of Nitrogen Oxides (NO_X) Provisions
VII. Grace Period for Newly Designated Nonattainment Areas
VIII. Wording Clarifications to 40 CFR 51.448 and 93.128
IX. Technical Corrections to 40 CFR 51.452 and 93.130
X. Conformity SIPs
XI. Administrative Requirements

I. Background on Transportation Conformity Rule

The transportation conformity rule, ''Criteria and Procedures for Determining Conformity to State or Federal Implementation Plans of Transportation Plans, Programs, and Projects Funded or Approved Under Title 23 U.S.C. or the Federal Transit Act,'' was published November 24, 1993, (58 FR 62188) and amended 40 CFR parts 51 and 93. The Notice of Proposed Rulemaking was published on January 11, 1993 (58 FR 3768).

Required under section 176(c) of the Clean Air Act, as amended in 1990, the transportation conformity rule established the criteria and procedures by which the Federal Highway Administration, the Federal Transit Administration, and metropolitan planning organizations determine the conformity of federally funded or approved highway and transit plans, programs, and projects to SIPs. According to the Clean Air Act, federally supported activities must conform to the implementation plan's purpose of attaining and maintaining the national ambient air quality standards.

On February 8, 1995, EPA published an interim final rule entitled, ''Transportation Conformity Rule Amendments: Transition to the Control Strategy Period.'' This interim final rule, which was effective immediately and applied until August 8, 1995, aligned the dates of certain adverse consequences that are imposed by the transportation conformity rule with the date that Clean Air Act section 179(b) highway sanctions become effective. A proposal to make the alignment of these dates permanent was also published February 8, 1995, and the final rule was published **.

Since publication of the transportation conformity rule in November 1993, EPA, DOT, and state and local air and transportation officials have had considerable experience implementing the criteria and procedures in the rule. It is that mutual experience which leads to the amendments which EPA is proposing today. In each case, the amendments are needed to clarify ambiguities, correct errors, or make the conformity process more logical and feasible.

EPA intends to propose further amendments to the transportation conformity rule to address concerns raised by conformity stakeholders, such as the build/no-build test, non-federal projects, adding projects between plan/TIP cycles, and rural nonattainment areas.

II. Transportation Control Measures (TCMs)

A. Background

The November 1993 transportation conformity rule does not allow TCMs to be federally funded, accepted, or approved without a conforming transportation plan and transportation improvement program (TIP) in place.

Clean Air Act sections 176(c)(2) (C) and (D) require that conforming transportation plans and TIPs be used to determine whether projects are in conformity. According to the November 1993 transportation conformity rule, the only federally funded or approved projects which may proceed in the absence of a conforming plan and TIP are those which have already been found to conform and those which the rule exempts because of their de minimis emission impacts. TCMs in general are not exempt projects.

EPA acknowledged in the preamble to the final rule that it may appear intuitively counterproductive to delay transportation projects which benefit air quality just because an area is unable to develop a conforming transportation plan and TIP. However, EPA asserted that allowing project-by-project approvals in the absence of a conforming transportation plan and TIP is contrary to the underlying philosophy that transportation actions must be planned and evaluated for emissions effects in the aggregate and for the long term. If TCMs proceeded outside the context of the transportation plan and TIP, EPA feared that there would be no assurance that the analysis of reasonable alternatives had been properly conducted and that the effect of the TCM on the flow within the network had been properly accounted for.

Furthermore, EPA stated its concern that allowing TCMs to proceed without a conforming transportation plan and TIP may undermine the cooperative transportation planning process. All constituencies should have a stake in the development of a conforming transportation plan and TIP, particularly given that compromises and tradeoffs among involved parties are often necessary.

B. Description of Proposal for TCMs

This proposal would allow TCMs which are in an approved SIP and have been included in a previously conforming transportation plan and TIP to proceed even if the conformity status of the current transportation plan or TIP lapses. Specifically, it would allow a project-level conformity determination to be made for a TCM specifically included in an approved SIP even if there were no currently conforming transportation plan and TIP in place (as presently required by 40 CFR 51.420 and 93.114), provided that the TCM was previously included in a conforming plan and TIP and all other relevant criteria for a project from a transportation plan and TIP have been satisfied (e.g., hot-spot analysis was performed as necessary).

According to this proposal, a TCM that had been included in a conforming plan and TIP would be considered to come from a plan and TIP (as required by 40 CFR 51.422 and 93.115) even if the conformity status of that transportation plan and TIP had subsequently lapsed. However, the other requirements in 40 CFR 51.422 and 93.115 defining what projects ''come from'' a transportation plan and TIP would continue to apply, including the requirement that the project's design concept and scope have not changed significantly from those which were described in the transportation plan/TIP.

C. Rationale

Even if an area's conformity status lapses, this proposal would allow work to continue on TCMs which have completed the metropolitan transportation planning process and are included in an approved SIP, but have not completed the National Environmental Policy Act process. EPA believes that it would be counterproductive to overcoming future difficulties in demonstrating conformity to halt progress on a TCM which has been approved through the air quality planning process and has met the metropolitan transportation planning process' requirements. Such a TCM has been endorsed by both the transportation and air quality communities as a project beneficial for air quality, and stopping its progress would make it more difficult to implement the SIP, develop a revised plan and TIP which can be found to conform, and attain the national ambient air quality standards.

EPA's previously expressed concerns about allowing TCMs to proceed in the absence of a conforming transportation plan and TIP do not apply in the context of this proposal, because this proposal's applicability is limited to TCMs which have been in a conforming transportation plan and TIP. Such TCMs have been considered in the long term and in the aggregate, in the context of the transportation plan and TIP and the cooperative transportation planning process. This amendment would not allow TCMs to circumvent the metropolitan transportation planning process; it would simply prevent the consequences of conformity failures from disrupting further project development activities for the implementation of TCMs.

Furthermore, EPA believes that this proposal is consistent with the Clean Air Act conformity provisions. Conformity is defined in Clean Air Act section 176(c)(1) as conformity to the implementation plan's purpose. Accordingly, implementation of a measure specifically included in the implementation plan should conform.

The subsequent requirement in section 176(c)(2)(C)(i) for a project to come from a conforming plan and program is an elaboration of the general definition in section 176(c)(1) and should not prevent actions obviously consistent with the general definition from proceeding.

D. Impact

At the present time, few control strategy SIPs (e.g., attainment demonstrations, 15% volatile organic compound emission reduction SIPs) have been approved by EPA. As a result, there are currently few TCMs which would be affected by this proposal. However, EPA expects that in the future there will be a number of TCMs which are included in an approved SIP and have been included in a conforming transportation plan and TIP which might be jeopardized by subsequent plan/TIP conformity lapses.

In particular, major highway and transit infrastructure projects which have been designated as TCMs in the SIP frequently have a lengthy period for project planning and development, including the federal environmental review. As a result, these major infrastructure investments are especially susceptible to being delayed by future lapses in transportation plan and TIP conformity status, despite their role in contributing to the conformity status of previously approved transportation plans and TIPs. This proposal would allow such projects to complete the project development process even if subsequent conformity difficulties caused an area's plan or TIP conformity status to lapse.

III. Requirement to Redetermine Conformity to Submitted Control Strategy SIP

A. Background

40 CFR 51.448(a)(1) and 93.128(a)(1) require the transportation plan and TIP to be found to conform to a submitted control strategy SIP revision within one year from the date the Clean Air Act requires its submission. Thus, in areas required to submit ozone attainment/3% rate-of-progress SIPs, which were generally due November 15, 1994, the current transportation conformity rule requires conformity to those SIPs to be determined by November 15, 1995, or else conformity status will lapse.

B. Description of Proposal

This proposal would amend 40 CFR 51.448(a)(1) and 93.128(a)(1) to allow areas 18 months to determine conformity, starting from the date of the State's initial submission to EPA of a control strategy SIP revision establishing a motor vehicle emissions budget. If conformity is not demonstrated within 18 months following such submission, the conformity status of the transportation plan and TIP will lapse, and no new project-level conformity determinations may be made.

This deadline for determining conformity to a submitted control strategy SIP would apply to the initial submission of each type of control strategy SIP. Ozone 15% SIPs, ozone 3% rate-of-progress SIPS, and attainment demonstrations (for any pollutant) are all control strategy SIPs whose initial submission would require conformity to be determined within 18 months.

The 18-month time period for determining conformity would not be affected by subsequent changes to the submitted control strategy SIP. For example, if within the 18-month period the initial submission is revised before conformity has been determined, the 18-month clock would not be restarted. However, when conformity is eventually determined, the relevant motor vehicle emissions budget must be used. If conformity to the initial submission has been demonstrated and that submission is subsequently revised, no 18-month clock would be started until, as required in § 51.400(a)(3) (93.104(a)(3)), ''Frequency,'' the SIP is approved by EPA.

C. Rationale

This proposal is consistent with the existing transportation conformity rule in that it imposes a one-time requirement to determine conformity after the initial submission of a control strategy SIP. EPA is proposing to redefine the beginning and length of the grace period before conformity to a newly submitted SIP must be demonstrated in order to be consistent with flexibility EPA is allowing on submission deadlines for ozone attainment SIPs.

EPA has provided flexibility regarding the deadline for submission of ozone attainment/3% SIPs because of unavoidable delays in their development (see March 2, 1995, memorandum from Mary D. Nichols, Assistant Administrator for Air and Radiation, to EPA Regional Administrators, titled, ''Ozone Attainment Demonstrations''). The existing conformity rule requires conformity to these SIPs to be determined by November 15, 1995, but many ozone areas have not even submitted such SIPs yet. As a result, EPA believes it is more appropriate to begin the grace period with a State's actual submission, rather than the Clean Air Act deadline for submission.

In addition, EPA is proposing to extend the grace period from 12 months to 18 months because experience with the existing conformity rule indicates that 18 months is a more reasonable timeframe. Also, the 18-month grace period is consistent with the grace period allowed in 40 CFR 51.400 and 93.104 after publication of the final rule and after EPA approval of control strategy SIP revisions.

EPA notes that there is a possibility that the agency will be unable to complete final rulemaking on these proposed amendments by November 15, 1995, in light of the date of this proposal and the need to respond to any comments submitted on the proposal. However, EPA believes that even should this proposed change not be effective by November 15, 1995, the conformity status of plans and TIPs would not lapse for certain areas taking advantage of the flexibilities provided in the March 2, 1995, memorandum. This is because in the March 2 memorandum EPA interpreted the statute as not requiring such areas to submit attainment demonstrations on November 15, 1994.

In the March 2 memorandum, EPA acknowledged that circumstances beyond the control of the States had precluded the States from completing the SIP submittals within the deadline (November 15, 1994) prescribed in the Act. Moreover, the deadline had passed and States could not reasonably be expected to complete the submissions in the immediate future. EPA emphasized that much of the problem stemmed from technical issues that arose in compiling the inventories and conducting modeling, particularly in light of the complexities of accounting for ozone transport.

In light of this unique situation, EPA implemented the statutory requirements for SIP submissions in a more flexible manner. EPA, in effect, extended the submission date and established new, staggered submission deadlines for various components of the required submittals. The lapsing provisions of the current conformity rule impose a lapse one year from the date the Clean Air Act requires submission of a control strategy implementation plan revision. Since under EPA's interpretation of the Act in the circumstances just described the statute does not require submissions for such states in November 1994, the conformity status of plans and TIPs in such areas will not lapse in November 1995, but rather would lapse one year from the various dates described in the March 2, 1995, policy referred to above. Prior to any of those dates, EPA will

have ample time to complete final action on the rule change proposed today.

However, those areas which are not taking advantage of the flexibility of the March 2 memorandum are still required under the current rule to determine conformity by November 15, 1995. These areas will lapse on November 15, 1995, if final action on this proposal is not effective by then and they have not determined conformity.

D. Effect on Deadline to Determine Conformity to Submitted 15% SIPs

The current conformity rule requires conformity to submitted 15% SIPs to be demonstrated by November 15, 1994. Conformity status in some areas has already lapsed because of failure to meet this deadline. This proposal would affect the deadline to determine conformity to submitted 15% SIPs in only a very few areas, because most 15% SIPs were submitted more than 18 months ago. For the few areas that submitted very late 15% SIPs, this proposal would extend by a few months the time allowed to demonstrate conformity to the 15% SIP.

IV. Grace Period for Use of Submitted Motor Vehicle Emissions Budgets

This proposal would clarify the existing transportation conformity rule's 90-day grace period before motor vehicle emissions budgets in newly submitted control strategy SIPs are required to be used to demonstrate conformity (presently section 51.448(a)(1)(ii) and 93.128(a)(1)(ii)).

This proposal clarifies that although areas are not required to use motor vehicle emissions budgets in the first 90 days following their submission, they may do so if EPA agrees the budgets are adequate for transportation conformity purposes. Newly submitted motor vehicle emissions budgets are required to be used in transportation conformity determinations beginning 90 days after their submission, provided EPA has not rejected the use of such submitted budgets for the purposes of transportation conformity.

V. Alignment With Clean Air Act Highway Sanctions

A. Description of Proposal

This proposal would not impose a transportation plan/TIP conformity lapse as a result of failure to submit or submission of an incomplete ozone, CO, PM–10, or NO_2 control strategy SIP until the date that Clean Air Act section 179(b) highway sanctions are applied as a result of such failure.

The February 8, 1995, interim final rule aligned transportation plan/TIP conformity lapse with application of Clean Air Act highway sanctions only in the cases of incomplete 15% SIPs with protective findings, failure to submit or submission of incomplete ozone attainment/3% SIPs, and disapproval of control strategy SIPs with a protective finding. This proposal would also align with application of Clean Air Act highway sanctions the conformity lapse resulting from failure to submit a 15% SIP, submission of an incomplete 15% SIP without a protective finding, and failure to submit or submission of an incomplete CO, PM–10, or NO_2 attainment SIP.

This proposal would not align the conformity lapse resulting from disapproval of a control strategy SIP without a protective finding. EPA will continue to consider this issue in the context of future conformity rule amendments addressing conformity stakeholders' concerns.

B. Rationale

EPA did not previously propose to align the conformity lapse in the cases of failure to submit a 15% SIP or incomplete 15% SIP without a protective finding because in these cases there is no other motor vehicle emissions budget to be used for the purposes of demonstrating transportation conformity. Since the February 8, 1995, interim final rule, EPA has made protective findings for all incomplete 15% SIPs, and areas which failed to submit required 15% SIPs are expected to submit such SIPs very shortly. As a result, aligning conformity lapse with highway sanctions for these cases will have no real impact, and by aligning conformity lapse for all ozone control strategy SIPs, the complexity of the regulatory text is greatly reduced.

EPA did not previously propose to align conformity lapse with application of highway sanctions for failure to submit or submission of incomplete CO, PM–10 and NO_2 attainment SIPs because there were no such SIP failures, and these cases therefore did not qualify for the interim final rule's emergency exception to the Administrative Procedures Act. The CO, PM–10 and NO_2 attainment SIPs required to date are complete, and there are some PM–10 attainment SIPs which are not due yet. Aligning conformity lapse and highway sanctions for these control strategy SIPs would reduce the complexity of the conformity regulation and is not anticipated to have any other significant impact.

C. Federal Implementation Plans (FIPs)

This proposal would prevent or remove the conformity lapse imposed as a result of a control strategy SIP failure on the date EPA promulgates a FIP with motor vehicle emissions budget(s) addressing that failure. Promulgation of a FIP with motor vehicle emissions budget(s) would serve as an appropriate basis for conformity determinations. EPA does not believe it is appropriate to impose a conformity lapse where a budget is in place against which conformity can be assessed. Moreover, nothing in section 176(c) suggests that such a lapse would be appropriate.

VI. Applicability of Nitrogen Oxides (NOx) Provisions

A. Background

Clean Air Act section 176(c)(3)(A)(iii) requires that transportation plans and TIPs contribute to emissions reductions in ozone and carbon monoxide areas before control strategy SIPs are approved. This requirement is implemented in 40 CFR 51.436 through 51.440 (and 93.122 through 93.124), which establishes the so-called ''build/no-build test.'' This test requires a demonstration that the ''Action'' scenario (representing the implementation of the proposed transportation plan/TIP) will result in lower motor vehicle emissions than the ''Baseline'' scenario (representing the implementation of the current transportation plan/TIP). In addition, the ''Action'' scenario must result in emissions lower than 1990 levels.

The November 1993 final transportation conformity rule does not require the build/no-build test and less-than-1990 test for NOx as an ozone precursor in ozone nonattainment areas where the Administrator determines that additional reductions of NOx would not contribute to attainment. Clean Air Act section 176(c)(3)(A)(iii), which is the conformity provision requiring contributions to emission reductions before SIPs with emissions budgets are approved, specifically references Clean Air Act section 182(b)(1). That section requires submission of State plans that, among other things, provide for specific annual reductions of VOC and NOx emissions ''as necessary'' to attain the ozone standard by the applicable attainment date. Section 182(b)(1) further states that its requirements do not apply in the case of NOx for those ozone nonattainment areas for which EPA determines that additional reductions of NOx would not contribute to attainment.

On June 17, 1994 (59 FR 31238), EPA issued guidance in the form of a general preamble specifically focusing on how the agency intended to process

conformity NOx waiver requests for nonclassifiable ozone nonattainment areas located outside the Ozone Transport Region. For other ozone nonattainment areas, the process for submitting waiver requests and the criteria used to evaluate them are explained in the December 1993 EPA document ''Guidelines for Determining the Applicability of Nitrogen Oxides Requirements Under Section 182(f),'' and the May 27, 1994, and February 8, 1995, memoranda from John S. Seitz, Director of the Office of Air Quality Planning and Standards, to Regional Air Division Directors, entitled ''Section 182(f) NOx Exemptions—Revised Process and Criteria.''

B. Applicability of Motor Vehicle NOx Emission Budgets Following a NOx Waiver

This proposal would make it clear that consistency with NOx motor vehicle emissions budgets in control strategy SIPs and maintenance plans is still required in ozone nonattainment or maintenance areas which previously received a conformity NOx waiver. Although the NOx build/no-build test and less-than-1990 test would not apply for ozone nonattainment areas with a conformity NOx waiver, consistency with the NOx motor vehicle emissions budget in a submitted control strategy SIP (e.g., attainment demonstration) or approved maintenance plan would be required for transportation conformity demonstrations, regardless of the conformity NOx waiver. Before approving any conformity NOx waivers, EPA stated in the June 17, 1994, **Federal Register** notice that EPA intended to propose to amend the transportation conformity rule in this manner. In addition, the Natural Resources Defense Council, on behalf of several environmental groups, commented on this issue during EPA's rulemaking process for granting area-specific NOx waivers, and EPA in its response to comments acknowledged the error in EPA's transportation conformity rule and stated EPA's intent to propose amending the rule.

Although when EPA promulgated the November 24, 1993, final conformity rule EPA intended the conformity NO_X waiver to provide relief from the NO_X build/no-build test only, due to a drafting oversight in the final conformity rule, none of the provisions related to NO_X apply under that rule if an area had received a conformity NO_X waiver. This proposal would delete the phrase ''unless the Administrator determines that additional reductions of NO_X would not contribute to attainment'' in the ''Applicability'' section of the rule (40 CFR 51.394(b)(3)(i) and 93.102(b)(3)(i)) and in the ''Motor vehicle emissions budget (transportation plan)'' section (40 CFR 51.428(b)(1)(ii) and 93.118(b)(1)(ii)). A revised version of this phrase would be retained only in the sections requiring the build/no-build and less-than-1990 tests, in order to continue to allow relief from that requirement if a NO_X waiver is granted, consistent with EPA's original intent.

EPA is proposing this change in order to properly implement the Clean Air Act. The requirement for consistency with the SIP's motor vehicle emissions budget is required in section 176(c)(2)(A) of the conformity provisions. That section specifically requires conformity determinations to show that ''emissions expected from implementation of plans and programs are consistent with estimates of emissions from motor vehicles and necessary emission reductions contained in the applicable implementation plan.'' SIP demonstrations of reasonable further progress, attainment, and maintenance contain these emissions estimates and ''necessary emission reductions.'' Since the Act specifically requires an emissions-based comparison between the transportation plan/TIP and the SIP, EPA believes the emissions budget is the appropriate mechanism for carrying out the demonstration of consistency. This is true even with respect to regional-scale pollutants, since the air quality analysis in the SIP can be relied upon to show that the SIP emission levels will not cause or exacerbate violations.

EPA believes that it is crucial for areas with attainment demonstrations or maintenance plans to demonstrate consistency with the NO_X motor vehicle emissions budgets in those plans in order to demonstrate conformity with the SIP. EPA requires ozone attainment demonstrations and most ozone maintenance plans to include estimates of NO_X emissions in order to adequately demonstrate attainment of the ozone standard by the Clean Air Act deadline or maintenance of the ozone standard. The resulting motor vehicle NO_X emissions budgets may not necessarily represent reductions in motor vehicle NO_X emissions, but these budgets are the motor vehicle NO_X emission levels consistent with attainment and/or maintenance, and they must not be exceeded.

C. Authority for NO_X Waivers and Process for Application and Approval

1. Change in Authority From Clean Air Act Section 182(f) to 182(b)(1)

This proposal would also change the conformity rule's reference to Clean Air Act section 182(f) as the authority for waiving the NO_X build/no-build and less-than-1990 tests for certain areas based on EPA's determination that additional reductions of NO_X would not contribute to attainment. This change is also made in an interim final rule that is published in the ''Final rules'' section of today's **Federal Register** and is effective immediately.

As described in paragraph V.A. ''Background,'' above, the stated authority for such a determination to provide relief from the interim-reductions requirements of the Clean Air Act is actually Clean Air Act section 182(b)(1), which is specifically referenced in section 176(c)(3)(A)(iii) of the conformity provisions. The Natural Resources Defense Council brought this to EPA's attention in its comments on EPA's rulemakings for area-specific NO_X waivers.

EPA agrees with the commenters, but also notes that section 182(b)(1), by its terms, only applies to moderate and above ozone nonattainment areas. Consequently, EPA believes that the interim-reductions requirements of section 176(c)(3)(A)(iii), and hence the authority provided in section 182(b)(1) to grant relief from those interim-reductions requirements, apply only with respect to those areas that are subject to section 182(b)(1). As explained further below, for areas not subject to section 182(b)(1) (e.g., marginal and below ozone nonattainment areas), EPA intends to continue to apply the transportation conformity rule's build/no-build test and less-than-1990 tests for purposes of implementing the requirements of section 176(c)(1), and EPA intends to continue to provide relief from these requirements under section 182(f). In addition, because general federal actions are not subject to section 176(c)(3)(A)(iii), which explicitly references section 182(b)(1), EPA will also continue to offer relief under section 182(f) from the applicable NO_X requirements of the general conformity rule.

In order to demonstrate conformity, transportation-related federal actions that are taken in ozone nonattainment areas not subject to section 182(b)(1) (and hence, not subject to section 176(c)(3)(A)(iii)) must still be consistent with the criteria specified under section 176(c)(1). Specifically, these actions

must not, with respect to any standard, cause or contribute to new violations, increase the frequency or severity of existing violations, or delay attainment. In addition, such actions must comply with the relevant requirements and milestones contained in the applicable SIP, such as reasonable further progress schedules, assumptions specified in the attainment or maintenance demonstration, numerical emissions limits or prohibitions. EPA believes that the build/no-build and less-than-1990 tests provide an appropriate basis for such areas to demonstrate compliance with the above criteria.

As stated earlier, EPA intends to continue to offer relief under section 182(f) from the interim NO_X requirements of the conformity rules that would apply under section 176(c)(1) for the areas not subject to section 182(b)(1). EPA believes this approach is consistent both with the way NO_X requirements in ozone nonattainment areas are treated under the Act generally, and under section 182(f) in particular. The basic approach of the Act is that NO_X reductions should apply when beneficial to an area's attainment goals, and should not apply when unhelpful or counterproductive. Section 182(f) reflects this approach but also includes specific substantive tests which provide a basis for EPA to determine when NO_X requirements should not apply. There is no substantive difference in the technical analysis required to make an assessment of NO_X impact on attainment in a particular area with respect to mobile source or stationary source NO_X emissions. Moreover, where EPA has determined that NO_X reductions will not benefit attainment or would be counterproductive in an area, the Agency believes it would be unreasonable to insist on NO_X reductions for purposes of meeting reasonable further progress or other milestone requirements. Thus, even as to the conformity requirements of section 176(c)(1), EPA believes it is reasonable and appropriate, first, to offer relief from the applicable NO_X requirements of the general and transportation conformity rules in areas where such reductions would not be beneficial and, second, to rely in doing so on the exemption tests provided in section 182(f).

2. Implications of Change in Statutory Authority

The change in authority for granting NO_X waivers from section 182(f) to section 182(b)(1) for areas subject to section 182(b)(1) has different impacts depending on whether the petitioning area is relying on ''clean'' air quality data or on modeling data. According to EPA's current information, almost all areas which intended to request a conformity NO_X waiver have already applied. Most areas that are eligible for a conformity NO_X waiver on the basis of ''clean data'' have already applied for (and in most cases, received) their waivers. There are less than ten areas which are eligible for a ''clean data'' conformity NO_X waiver but which have not applied and do not have a pending redesignation request.

Moderate and above ''clean data'' areas that have pending redesignation requests and are subject to section 182(b)(1) could be relieved of the NO_X build/no-build and less-than-1990 tests under section 182(f) when EPA takes final action implementing its recently-issued policy concerning, among other things, the applicability of section 182(b)(1) requirements for the areas that are demonstrating attainment of the ozone standard based on ''clean data.'' The May 10, 1995, memorandum from John Seitz, Director of EPA's Office of Air Quality Planning and Standards, entitled ''Reasonable Further Progress, Attainment Demonstration, and Related Requirements for Ozone Nonattainment Areas Meeting the Ozone National Ambient Air Quality Standard,'' should be referred to for a more thorough discussion. The aspect of the policy that is relevant here is EPA's determination that the section 182(b)(1) provisions regarding reasonable further progress and attainment demonstrations may be interpreted so as not to require the SIP submissions otherwise called for in section 182(b)(1) if an ozone nonattainment area that would otherwise be subject to those requirements is in fact attaining the ozone standard (i.e., attainment of the standard is demonstrated with three consecutive years of complete, quality-assured air-quality monitoring data). Any such ''clean data'' areas, under this interpretation, would no longer be subject to the requirements of section 182(b)(1) once EPA takes final rulemaking action adopting the interpretation in conjunction with its determination that the area has attained the standard. At that time, such areas would be treated like ozone nonattainment areas classified marginal and below, and hence eligible for NO_X waivers from the interim-period transportation conformity requirements by obtaining a waiver under section 182(f), as described above.

For moderate and above ozone nonattainment areas which are relying on modeling data in petitioning for a transportation conformity NO_X exemption, the proposed change affects the process for applying for such waivers. Unlike section 182(f)(3), section 182(b)(1) requires that EPA approve a NO_X waiver (i.e., determine that additional reductions of NO_X would not contribute to attainment) as part of a SIP revision. In discussing the NO_X (and VOC) reductions required under its provisions, section 182(b)(1) states that SIP revisions must be submitted which provide for ''such specific annual reductions in emissions of volatile organic compounds and oxides of nitrogen as necessary to attain the national primary ambient air quality standard for ozone'' by the applicable attainment date. The requirement does not apply in the case of NO_X if the EPA makes a determination that additional reductions of NO_X would not contribute to attainment. The Act also states that this determination must be made ''when the Administrator approves the plan or plan revision.'' The phrase ''the plan or plan revision'' clearly refers to the plan required under this subsection that must provide for the specific annual VOC and NO_X reductions determined to be necessary for the area to attain the ozone national ambient air quality standard. EPA believes, consistent with its existing NO_X exemption guidance, that this language can be interpreted to encompass approvals of SIP submittals containing NO_X exemption requests based on adequate modeling. If the modeling demonstration for such requests is submitted as part of a SIP revision and provides adequate evidence that for the relevant area specific additional annual reductions of NO_X are not ''necessary'' for that area to attain the NAAQS, EPA believes such a demonstration would be consistent with the requirements of the NO_X exemption test provided in section 182(b)(1).

3. New Process for Conformity NO_X Waiver Application

As discussed in the previous section, under Clean Air Act section 182(b)(1), petitions for transportation conformity NO_X waivers for areas subject to that section must be submitted as formal SIP revisions by the Governor (or designee) and following a public hearing. As explained previously, EPA will continue to process and approve under section 182(f)(3) conformity NO_X waivers for areas not subject to section 182(b)(1), without public hearings or submission by the Governor.

Except for the requirement for modeling data petitions to be submitted as part of a SIP revision for ozone areas subject to section 182(b)(1), previous guidance on section 182(f) NO_X waivers continues to apply for the purpose of

conformity NO_X waivers. As described in paragraph V.A. ''Background,'' above, this guidance includes the June 17, 1994 (59 FR 31238), general preamble entitled, ''Conformity; General Preamble for Exemption for Nitrogen Oxides Provisions,'' the December 1993 EPA document ''Guidelines for Determining the Applicability of Nitrogen Oxides Requirements Under Section 182(f),'' and the May 27, 1994, and February 8, 1995 memoranda from John S. Seitz, Director of the Office of Air Quality Planning and Standards, to Regional Air Division Directors, entitled ''Section 182(f) NO_X Exemptions—Revised Process and Criteria.''

EPA believes that the new procedural requirement for a public hearing and submission by the Governor (or designee) for these ozone nonattainment areas will not adversely affect states applying for transportation conformity NO_X waivers since only two areas are awaiting an exemption based on modeling data.

4. General Conformity

As noted earlier, the NO_X provisions of the general conformity rule, ''Determining Conformity of General Federal Actions to State or Federal Implementation Plans'' (58 FR 63214, November 30, 1993), would not be affected by this proposal. A NO_X waiver under Clean Air Act section 182(f) removes the NO_X general conformity requirements entirely and would continue to do so. The Clean Air Act's provision for transportation conformity NO_X waivers stems from section 176(c)(3)(A)(iii), which addresses only transportation conformity, and not general conformity. Therefore, the statutory authority for general conformity NO_X waivers is not required to be Clean Air Act section 182(b) for any areas and may continue to be section 182(f) for all areas.

VII. Grace Period for Newly Designated Nonattainment Areas

This proposal would allow areas which have been redesignated from attainment to nonattainment a 12-month grace period after final redesignation during which to determine the conformity of the transportation plan and TIP.

Section 176(c)(3)(B)(i) of the Clean Air Act as amended in 1990 allowed a similar grace period for 12 months after the date of enactment of the Clean Air Act Amendments of 1990. EPA believes it is appropriate to allow newly designated nonattainment areas this grace period to determine transportation plan/TIP conformity. Otherwise, no transportation projects could be found to conform in a newly designated nonattainment area until the conformity of the transportation plan and TIP had been demonstrated. Transportation plan/TIP conformity determinations take time, particularly for an area's first time, and EPA believes not allowing a grace period would unduly disrupt implementation of transportation projects.

EPA believes it has authority under *Sierra Club* v. *EPA*, 719F.2d 436 (DC Cir. 1983) to provide grandfathering from new requirements where the new rule is an abrupt departure from prior practice parties have relied on, the application of the new rule would impose a burden on parties, and there is not a strong interest in applying the new rule immediately.

VIII. Wording Clarifications to 40 CFR 51.448 and 93.128

A. Introductory Paragraph (a)(1) of §§ 51.448 and 93.128

This proposal would clarify EPA's original intention that if conformity status lapses due to failure to redetermine conformity after a control strategy SIP submission, that lapse is remedied when transportation plan and TIP conformity to the new submission is eventually determined (although lapsing for other reasons would not be remedied). There is no reason to maintain a conformity lapse once conformity to a new budget has been demonstrated.

B. §§ 51.448(g) and 93.128(g)

Paragraph (g) in §§ 51.448 and 93.128 would be deleted, because the other amendments in this proposal make paragraph (g)'s clarifications irrelevant and unnecessary.

IX. Technical Corrections to 40 CFR 51.452 and 93.130

A. Consistency With SIPs

The preamble to the November 1993 transportation conformity rule states that for all areas there must be consistency between the SIP and the conformity analysis regarding temperature, season, time period, and other inputs (58 FR 62195, November 24, 1993). However, this regulatory requirement is by error stated in section 51.452(b) (93.130(b)), which applies only to serious, severe, and extreme ozone nonattainment areas and serious carbon monoxide areas after January 1, 1995.

EPA indicated in an October 14, 1994, memorandum from Philip A. Lorang to EPA Branch Chiefs entitled ''Transportation Conformity Q & A's'' that EPA's intent was for this requirement to apply to all areas. This proposal would redesignate paragraph (b)(5) as paragraph (a)(6), because paragraph (a) is titled ''General requirements.'' This would clarify that the provision applies in all areas pursuant to EPA's original intention as stated in the preamble to the November 1993 rule.

B. Cross-References in Section 51.452(c)(1) and 93.130(c)(1)

As EPA has indicated in the October 14, 1994, ''Transportation Conformity Q & A's'' memorandum cited above, section 51.452(c)(1) (93.130(c)(1)), contains two incorrect references to paragraph (a). It should instead reference paragraph (b) of section 51.452 (93.130). EPA's intent was to require areas not subject to paragraph (b) (ozone and CO areas not serious and above or before January 1, 1995) to continue using the procedures which satisfy some or all of the requirements of paragraph (b) (applying to serious and above ozone and CO areas after January 1, 1995) where those procedures have been the previous practice of the MPO. The current cross-reference does not make sense because it refers to ''General requirements,'' which apply to all areas. This proposal would correct the incorrect reference.

X. Conformity SIPs

A conformity SIP revision consistent with these amendments would be required to be submitted to EPA 12 months from the date of publication of the final rule. Section 176(c)(4)(C) of the Clean Air Act as amended in 1990 allowed States 12 months from the promulgation of the original transportation conformity rule to submit conformity SIP revisions. EPA believes that it is consistent with the statute to provide states a similar time period to revise their conformity SIPs.

XI. Administrative Requirements

A. Executive Order 12866

Under Executive Order 12866 (58 FR 51735, October 4, 1993), the Agency must determine whether the regulatory action is ''significant'' and therefore subject to OMB review and the requirements of the Executive Order. The Order defines ''significant regulatory action'' as one that is likely to result in a rule that may:

(1) Have an annual effect on the economy of $100 million or more or adversely affect in a material way the economy, a sector of the economy, productivity, competition, jobs, the environment, public health or safety, or

State, local, or tribal governments or communities;

(2) Create a serious inconsistency or otherwise interfere with an action taken or planned by another agency;

(3) Materially alter the budgetary impact of entitlements, grants, user fees, or loan programs or the rights and obligations of recipients thereof;

(4) Raise novel or policy issues arising out of legal mandates, the President's priorities, or the principles set forth in the Executive Order.

It has been determined that this rule is not a ''significant regulatory action'' under the terms of Executive Order 12866. EPA has submitted this action to OMB for review. Changes made in response to OMB suggestions or recommendations will be documented in the public record.

B. Reporting and Recordkeeping Requirements

This rule does not contain any information collection requirements from EPA which require approval by OMB under the Paperwork Reduction Act of 1980, 44 U.S.C. 3501 *et seq.*

C. Regulatory Flexibility Act

The Regulatory Flexibility Act of 1980 requires federal agencies to identify potentially adverse impacts of federal regulations upon small entities. In instances where significant impacts are possible on a substantial number of these entities, agencies are required to perform a Regulatory Flexibility Analysis (RFA).

EPA has determined that today's regulations will not have a significant impact on a substantial number of small entities. This regulation affects federal agencies and metropolitan planning organizations, which by definition are designated only for metropolitan areas with a population of at least 50,000.

Therefore, as required under section 605 of the Regulatory Flexibility Act, 5 U.S.C. 601 *et seq.*, I certify that this regulation does not have a significant impact on a substantial number of small entities.

D. Unfunded Mandates

Under Sections 202, 203 and 205 of the Unfunded Mandates Reform Act of 1995 (''Unfunded Mandates Act''), signed into law on March 22, 1995, EPA must undertake various actions in association with proposed or final rules that include a Federal mandate that may result in estimated costs of $100 million or more to the private sector, or to State, local, or tribal governments in the aggregate.

EPA has determined that to the extent this rule imposes any mandate within the meaning of the Unfunded Mandates Act, this final action does not include a mandate that may result in estimated costs of $100 million or more to State, local, or tribal governments in the aggregate or to the private sector. This proposal consists of additional flexibilities and clarifications. Therefore, EPA has not prepared a statement with respect to budgetary impacts.

List of Subjects

40 CFR Part 51

Environmental protection, Administrative practice and procedure, Carbon monoxide, Intergovernmental relations, Nitrogen dioxide, Ozone, Particulate matter, Reporting and recordkeeping requirements, Volatile organic compounds.

40 CFR Part 93

Administrative practice and procedure, Air pollution control, Carbon monoxide, Intergovernmental relations, Ozone.

Dated: August 17, 1995.

Carol M. Browner,

Administrator.

For the reasons set out in the preamble, 40 CFR parts 51 and 93 are proposed to be amended as follows:

PARTS 51 AND 93—[AMENDED]

1. The authority citation for parts 51 and 93 continues to read as follows:

Authority: 42 U.S.C. 7401–7671q.

2. The identical text of §§ 51.392 and 93.101 is amended by adding a definition in alphabetical order to read as follows:

§ . Definitions.

* * * * *

Protective finding means a determination by EPA that the control strategy contained in a submitted control strategy implementation plan revision would have been considered approvable with respect to requirements for emissions reductions if all committed measures had been submitted in enforceable form as required by Clean Air Act section 110(a)(2)(A).

* * * * *

3. The identical text of §§ 51.394 and 93.102 is amended by revising paragraph (b)(3)(i) and adding paragraph (d) to read as follows:

§ . Applicability.

* * * * *

(b) * * *

(3) * * *

(i) Volatile organic compounds and nitrogen oxides in ozone areas;

* * * * *

(d) *Grace period for new nonattainment areas.* For areas which have been in attainment for either ozone, CO, PM–10 or NO_2 since 1990 and are subsequently redesignated to nonattainment for any of these pollutants, the provisions of this subpart shall not apply for 12 months following the date of final designation to nonattainment for such pollutant.

4. § 51.396(a) is amended by adding a sentence after the second sentence to read as follows:

§ 51.396 Implementation plan revision.

(a) * * * Further revisions to the implementation plan required by amendments to this subpart must be submitted within 12 months of the date of publication of final amendments to this subpart.* * *

* * * * *

5. § 51.420 is revised to read as follows:

§ 51.420 Criteria and procedures: Currently conforming transportation plan and TIP.

There must be a currently conforming transportation plan and currently conforming TIP at the time of project approval. This criterion applies during all periods. It is satisfied if the current transportation plan and TIP have been found to conform to the applicable implementation plan by the MPO and DOT according to the procedures of this subpart.

(a) Only one conforming transportation plan or TIP may exist in an area at any time; conformity determinations of a previous transportation plan or TIP expire once the current plan or TIP is found to conform by DOT. The conformity determination on a transportation plan or TIP will also lapse if conformity is not determined according to the frequency requirements of § 51.400.

(b) This criterion is not required to be satisfied at the time of project approval for a TCM specifically included in the applicable implementation plan, provided that the TCM was included in a transportation plan and TIP previously found to conform, and all other relevant criteria of this subpart are satisfied.

6. Section 93.114 is revised to read as follows:

§ 93.114 Criteria and procedures: Currently conforming transportation plan and TIP.

There must be a currently conforming transportation plan and currently conforming TIP at the time of project

approval. This criterion applies during all periods. It is satisfied if the current transportation plan and TIP have been found to conform to the applicable implementation plan by the MPO and DOT according to the procedures of this subpart.

(a) Only one conforming transportation plan or TIP may exist in an area at any time; conformity determinations of a previous transportation plan or TIP expire once the current plan or TIP is found to conform by DOT. The conformity determination on a transportation plan or TIP will also lapse if conformity is not determined according to the frequency requirements of § 93.104.

(b) This criterion is not required to be satisfied at the time of project approval for a TCM specifically included in the applicable implementation plan, provided that the TCM was included in a transportation plan and TIP previously found to conform, and all other relevant criteria of this subpart are satisfied.

7. The identical text of §§ 51.422 and 93.115 are amended by adding a sentence to the end of paragraph (a) and by adding paragraph (d) to read as follows:

§. Criteria and procedures: Projects from a plan and TIP.

(a) * * * Special provisions for TCMs are provided in paragraph (d) of this section.

* * * * *

(d) *TCMs.* If the conformity status of the transportation plan or TIP has lapsed, a TCM may be considered to satisfy this criterion if it meets the requirements of paragraphs (b) and (c) of this section with respect to a previously conforming transportation plan and TIP.

8. The identical text of §§ 51.428 and 93.118 is amended by revising paragraph (b)(1)(ii) to read as follows:

§. Criteria and procedures: Motor vehicle emissions budget (transportation plan).

* * * * *

(b) * * *

(1) * * *

(ii) NO_X as an ozone precursor;

* * * * *

9. Section 51.448 is amended by removing paragraph (g), redesignating paragraphs (h) and (i) as (g) and (h), and revising paragraphs (a) through (d) and the newly designated paragraph (g) to read as follows:

§ 51.448 Transition from the interim period to the control strategy period.

(a) *Control strategy implementation plan submissions.* (1) The transportation plan and TIP must be demonstrated to conform by eighteen months from the date of the State's initial submission to EPA of each control strategy implementation plan establishing a motor vehicle emissions budget. If conformity is not determined by 18 months from the date of submission of such control strategy implementation plan, the conformity status of the transportation plan and TIP will lapse, and no new project-level conformity determinations may be made, until the transportation plan and TIP have been demonstrated to conform.

(2) For areas not yet in the control strategy period for a given pollutant, conformity shall be demonstrated using the motor vehicle emissions budget(s) in a submitted control strategy implementation plan revision for that pollutant beginning 90 days after submission, unless EPA declares such budget(s) inadequate for transportation conformity purposes. The motor vehicle emissions budget(s) may be used to determine conformity during the first 90 days after its submission if EPA agrees that the budget(s) are adequate for conformity purposes.

(b) *Disapprovals.* (1) If EPA disapproves the submitted control strategy implementation plan revision and so notifies the State, MPO and DOT, which initiates the sanction process under Clean Air Act sections 179 or 110(m), the conformity status of the transportation plan and TIP shall lapse 120 days after EPA's disapproval, and no new project-level conformity determinations may be made. No new transportation plan, TIP, or project may be found to conform until another control strategy implementation plan revision fulfilling the same Clean Air Act requirements is submitted and conformity to this submission is determined.

(2) Notwithstanding paragraph (b)(1) of this section, if EPA disapproves the submitted control strategy implementation plan revision but makes a protective finding, the conformity status of the transportation plan and TIP shall lapse on the date that highway sanctions as a result of the disapproval are imposed on the nonattainment area under section 179(b)(1) of the Clean Air Act. No new transportation plan, TIP, or project may be found to conform until another control strategy implementation plan revision fulfilling the same Clean Air Act requirements is submitted and conformity to this submission is determined.

(c) *Failure to submit and incompleteness.* For areas where EPA notifies the State, MPO, and DOT of the State's failure to submit or submission of an incomplete control strategy implementation plan revision, which initiates the sanction process under Clean Air Act sections 179 or 110(m), the conformity status of the transportation plan and TIP shall lapse on the date that highway sanctions are imposed on the nonattainment area for such failure under section 179(b)(1) of the Clean Air Act, unless the failure has been remedied and acknowledged by a letter from the EPA Regional Administrator.

(d) *Federal implementation plans.* When EPA promulgates a federal implementation plan that contains motor vehicle emissions budget(s) as a result of a State failure, the conformity lapse imposed by this section because of that State failure is removed.

* * * * *

(g) *Nonattainment areas which are not required to demonstrate reasonable further progress and attainment.* If an area listed in § 51.464 submits a control strategy implementation plan revision, the requirements of paragraphs (a) and (e) of this section apply. Because the areas listed in § 51.464 are not required to demonstrate reasonable further progress and attainment the provisions of paragraphs (b) and (c) of this section do not apply to these areas at any time.

* * * * *

10. Section 93.128 is amended by removing paragraph (g), redesignating paragraphs (h) and (i) as (g) and (h), and revising paragraphs (a) through (d) and the newly designated paragraph (g) to read as follows:

§ 93.128 Transition from the interim period to the control strategy period.

(a) *Control strategy implementation plan submissions.*

(1) The transportation plan and TIP must be demonstrated to conform by eighteen months from the date of the State's initial submission to EPA of each control strategy implementation plan establishing a motor vehicle emissions budget. If conformity is not determined by 18 months from the date of submission of such control strategy implementation plan, the conformity status of the transportation plan and TIP will lapse, and no new project-level conformity determinations may be made, until the transportation plan and TIP have been demonstrated to conform.

(2) For areas not yet in the control strategy period for a given pollutant, conformity shall be demonstrated using the motor vehicle emissions budget(s) in a submitted control strategy implementation plan revision for that pollutant beginning 90 days after submission, unless EPA declares such budget(s) inadequate for transportation conformity purposes. The motor vehicle

emissions budget(s) may be used to determine conformity during the first 90 days after its submission if EPA agrees that the budget(s) are adequate for conformity purposes.

(b) *Disapprovals.* (1) If EPA disapproves the submitted control strategy implementation plan revision and so notifies the State, MPO and DOT, which initiates the sanction process under Clean Air Act sections 179 or 110(m), the conformity status of the transportation plan and TIP shall lapse 120 days after EPA's disapproval, and no new project-level conformity determinations may be made. No new transportation plan, TIP, or project may be found to conform until another control strategy implementation plan revision fulfilling the same Clean Air Act requirements is submitted and conformity to this submission is determined.

(2) Notwithstanding paragraph (b)(1) of this section, if EPA disapproves the submitted control strategy implementation plan revision but makes a protective finding, the conformity status of the transportation plan and TIP shall lapse on the date that highway sanctions as a result of the disapproval are imposed on the nonattainment area under section 179(b)(1) of the Clean Air Act. No new transportation plan, TIP, or project may be found to conform until another control strategy implementation plan revision fulfilling the same Clean Air Act requirements is submitted and conformity to this submission is determined.

(c) *Failure to submit and incompleteness.* For areas where EPA notifies the State, MPO, and DOT of the State's failure to submit or submission of an incomplete control strategy implementation plan revision, which initiates the sanction process under Clean Air Act sections 179 or 110(m), the conformity status of the transportation plan and TIP shall lapse on the date that highway sanctions are imposed on the nonattainment area for such failure under section 179(b)(1) of the Clean Air Act, unless the failure has been remedied and acknowledged by a letter from the EPA Regional Administrator.

(d) *Federal implementation plans.* When EPA promulgates a federal implementation plan that contains motor vehicle emissions budget(s) as a result of a State failure, the conformity lapse imposed by this section because of that State failure is removed.

* * * * *

(g) *Nonattainment areas which are not required to demonstrate reasonable further progress and attainment.* If an area listed in § 93.136 submits a control strategy implementation plan revision, the requirements of paragraphs (a) and (e) of this section apply. Because the areas listed in § 93.136 are not required to demonstrate reasonable further progress and attainment the provisions of paragraphs (b) and (c) of this section do not apply to these areas at any time.

* * * * *

§§ 51.452, 93.130 [Amended]

11. The identical text of §§ 51.452 and 93.130 is amended by redesignating paragraph (b)(5) as paragraph (a)(6); and in paragraph (c)(1) by revising the references, ''paragraph (a)'' to read ''paragraph (b)'' in two places.

[FR Doc. 95–21405 Filed 8–28–95; 8:45 am]
BILLING CODE 6560–50–P

---

40 CFR Part 70

[AD-FRL–5287–8]

Title V Clean Air Act Proposed Interim Approval of Operating Permits Program; West Virginia

AGENCY: Environmental Protection Agency (EPA).

ACTION: Proposed interim approval.

SUMMARY: EPA is proposing interim approval of the operating permits program submitted by West Virginia. This program was submitted by West Virginia for the purpose of complying with federal requirements which mandate that states develop, and submit to EPA, programs for issuing operating permits to all major stationary sources, and to certain other sources. The rationale for proposing interim approval is set forth in this notice; additional information is available at the address indicated below. This action is being taken in accordance with the provisions of the Clean Air Act.

DATES: Comments on this proposed action must be received in writing by September 28, 1995.

ADDRESSES: Comments should be addressed to Jennifer M. Abramson (3AT23), Air, Radiation and Toxics Division, U.S. Environmental Protection Agency, Region III, 841 Chestnut Building, Philadelphia, PA 19107.

Copies of West Virginia's submittal and other supporting information used in developing the proposed interim approval are available for inspection during normal business hours at the following location: Air, Radiation, and Toxics Division, U.S. Environmental Protection Agency, Region III, 841 Chestnut Building, Philadelphia, PA 19107.

FOR FURTHER INFORMATION CONTACT: Jennifer M. Abramson (3AT23), Air, Radiation and Toxics Division, U.S. Environmental Protection Agency, Region III, 841 Chestnut Building, Philadelphia, PA 19107, (215) 597–2923.

SUPPLEMENTARY INFORMATION:

I. Background

As required under Title V of the Clean Air Act (CAA) as amended (1990), EPA has promulgated rules which define the minimum elements of an approvable state operating permits program and the corresponding standards and procedures by which EPA will approve, oversee, and withdraw approval of state operating permits programs (see 57 FR 32250 (July 21, 1992)). These rules are codified at 40 Code of Federal Regulations (CFR) Part 70 and require states to develop, and submit to EPA, programs for issuing these operating permits to all major stationary sources and to certain other sources. Due to pending litigation over several aspects of the Part 70 rule which was promulgated on July 21, 1992, Part 70 is in the process of being revised. When the final revisions to Part 70 are promulgated, the requirements of the revised Part 70 will define EPA's criteria for the minimum elements of an approvable state operating permits program and the corresponding standards and procedures by which EPA will approve, oversee, and withdraw approval of state operating permits program submittals. Until the date which the revisions to Part 70 are promulgated, the currently effective July 21, 1992 version of Part 70 shall be used as the basis for EPA review.

The CAA requires that states develop and submit these programs to EPA by November 15, 1993, and that EPA act to approve or disapprove each program within 1 year after receiving the submittal. EPA's program review occurs pursuant to section 502 of the CAA and the July 21, 1992 version of Part 70, which together outline the currently applicable criteria for approval or disapproval. Where a program substantially, but not fully, meets the requirements of Part 70, EPA may grant the program interim approval for a period of up to 2 years. If EPA has not fully approved a program by 2 years after the November 15, 1993 date, or by the end of an interim program, EPA must establish and implement a federal operating permits program.

Following final interim approval, if West Virginia fails to submit a complete corrective program for full approval by 6 months before the interim approval

period expires, EPA would start an 18-month clock for mandatory sanctions. If West Virginia then failed to submit a complete corrective program before the expiration of that 18-month period, EPA would be required to apply one of the sanctions in section 179(b) of the CAA. Such a sanction would remain in effect until EPA determined that West Virginia had corrected the deficiency by submitting a complete corrective program. Moreover, if the Administrator found a lack of good faith on the part of West Virginia, both sanctions under section 179(b) would apply after the expiration of the 18-month period until the Administrator determined that West Virginia had come into compliance. In any case, if, six months after application of the first sanction, West Virginia still had not submitted a corrective program that EPA found complete, a second sanction would be required.

If, following final interim approval, EPA disapproved West Virginia's complete corrective program, EPA would be required to apply one of the section 179(b) sanctions on the date 18 months after the effective date of the disapproval, unless prior to that date West Virginia had submitted a revised program and EPA had determined that this program corrected the deficiencies that prompted the disapproval. Moreover, if the Administrator found a lack of good faith on the part of West Virginia, both sanctions under section 179(b) would apply after the expiration of the 18-month period until the Administrator determined that West Virginia had come into compliance. In all cases, if, six months after EPA applied the first sanction, West Virginia had not submitted a revised program that EPA had determined corrected the deficiencies that prompted disapproval, a second sanction would be required.

In addition, discretionary sanctions may be applied where warranted any time after the end of an interim approval period if West Virginia has not timely submitted a complete corrective program or EPA has disapproved a submitted corrective program. Moreover, if EPA has not granted full approval to West Virginia's program by the expiration of the interim approval period, EPA must promulgate, administer and enforce a federal operating permits program for West Virginia upon the date the interim approval period expires.

On November 12, 1993, West Virginia submitted an operating permits program for review by EPA. The submittal was supplemented by additional materials on August 26, 1994 and September 29, 1994, and was found to be administratively complete pursuant to 40 CFR 70.4(e)(1). The submittal includes the following components: Transmittal letter; description of West Virginia's Title V operating permits program; permitting regulations and rule adoption documentation; attorney general's legal opinion; permitting program documentation, procedures, guidelines, or policies for implementing the operating permits program; permit fee demonstration and program resource/organizational information; and compliance tracking and enforcement description.

II. Summary and Analysis of the State's Submittal

The analysis contained in this notice focuses on the major portions of West Virginia's operating permits program submittal: regulations and program implementation, variances, fees, and provisions implementing the requirements of Titles III and IV of the CAA. Specifically, this notice addresses the deficiencies in West Virginia's submittal which will need to be corrected to fully meet the requirements of the July 21, 1992 version of Part 70. These deficiencies as well as other issues related to West Virginia's operating permits program are discussed in detail in the Technical Support Document (TSD). The full program submittal and the TSD are available for review as part of the public docket. The docket may be viewed during regular business hours at the EPA Region III office listed in the **ADDRESSES** section of this notice.

A. Regulations and Program Implementation

West Virginia's operating permits program is primarily defined by regulations adopted as Series 30 of Title 45, Legislative Rules of the Air Pollution Control Commission, or 45CSR30—Requirements for Operating Permits. The following analysis of West Virginia's operating permits regulations corresponds directly with the format and structure of the July 21, 1992 version of Part 70.

During the review of West Virginia's 45CSR30, EPA identified several instances in which regulatory provisions contain vague language, misreferences and/or typographical errors. The provisions in which these errors occur are identified in the TSD and must be interpreted as if written correctly to fully meet the requirements of Part 70.

Section 70.2 Definitions. West Virginia's regulations substantially meet the requirements of 40 CFR 70.2 for definitions. However, the section 2.18 definition of ''Emissions unit'' does not include activities or parts of activities which emit or potentially emit pollutants listed under section 112(b) of the CAA. West Virginia must revise the section 2.18 definition of ''Emissions unit'' to specifically include activities or parts of activities which emit or potentially emit pollutants listed under section 112(b) of the CAA in order to fully meet the requirements of 40 CFR 70.2.

Section 70.3 Applicability. West Virginia's regulations fully meet the requirements of 40 CFR 70.3 for applicability. The section 2.26 definition of ''Major source'' allows for research and development (R&D) facilities to be treated as separate sources from other stationary sources which are part of the same industrial grouping, are located on contiguous or adjacent property, and are under common control. The term ''Research and development facility'' is defined in section 2.37 to preclude activities which contribute to the product produced for sale or exchange for commercial profit.

EPA stated in the preamble to the final part 70 rule that, ''in many cases States will have the flexibility to treat an R&D facility * * * as though it were a separate source, and [the R&D facility] would then be required to have a title V permit only if the R&D facility itself would be a major source'' (57 FR 32264 and 32269, July 21, 1992). Read consistently with the ''major source'' definition in the rule, this statement means that separate source treatment would occur only in situations where the collocated R&D portion of a source has its own two-digit SIC code and is not a support facility. Accordingly, EPA had until recently considered separate treatment of R&D facilities to be grounds for interim approval.

As explained in the supplemental proposal to revise Part 70 which EPA expects to publish soon, EPA believes that R&D should be treated as having its own industrial grouping for purposes of the title I and section 302(j) elements of the major source definition.

Separate treatment will not exempt R&D facilities in all cases. Some R&D activities may still be subject to permitting because they are either individually major or a support facility making significant contributions to the product of a collocated major facility. The support facility test dictates that, even where there are two or more industrial groupings at a commonly owned facility, these groupings should be considered together if the output of one is more than 50 per cent devoted to support of another.

Although West Virginia's program does not specifically reference the

support facility test, EPA expects that such a test will be applied in making major source applicability determinations as established under the new source review program and continued under title V. Major source applicability determinations made without the support facility test would not fully meet the requirements of 40 CFR 70.3.

Section 70.5 Permit Applications. West Virginia's regulations substantially meet the requirements of 40 CFR 70.5 for permit applications. However, in section 3.2.d, West Virginia lists several types of ''insignificant activities'' which need only to be identified, rather than described, in permit applications. Several of the activities listed in section 3.2.d are not intrinsically ''insignificant'' and could potentially prevent the Chief from having sufficient emissions information to impose all applicable requirements in accordance with Part 70.

The following section 3.2.d activities must be clarified to ensure that emissions from such units will not interfere with the imposition of all applicable requirements:

3.2.d.D ''Indoor or outdoor kerosene heaters'';

3.2.d.E ''Space heaters operating by direct heat transfer'';

Section 3.2.d.K (''Portable generators'') must be bounded to include size or production rate cutoffs, or other qualifiers, to ensure that emissions from these units will not interfere with the imposition of all applicable requirements.

Additionally, unless and until the Administrator determines that Title VI requirements need not be contained in Title V permits, West Virginia must also modify section 3.2.d.C (''Comfort air conditioning * * *'') as necessary to ensure that the Chief will have sufficient information to incorporate Title VI requirements into Title V permits.

Section 3.2.d.M of West Virginia's rule authorizes the Chief to determine activities or emissions units to be insignificant in addition to those listed in section 3.2.d. For the same reasons stated above, the Chief's discretion to consider additional activities to be insignificant must be bounded. Bounding of the Chief's discretion is necessary since, as section 3.2.d.M is presently structured, EPA will not be given the opportunity to review these activities or emissions units prior to them being listed in a source's application form. Section 70.5(c) requires that insignificant activities be approved by EPA as part of a State's approved program. This allows EPA to determine whether such insignificant activities are likely to interfere with the State's ability to assure compliance with applicable requirements through permits.

In the absence of a specific list of insignificant activities, a limitation on size or production rate may serve the same purpose. EPA views size or production rate cutoffs in the range of 1–2 tons per year for criteria pollutant emissions and the lesser of 1000 pounds per year or section 112(g) de minimis levels for hazardous air pollutant emissions to be an acceptable range for individual insignificant activities. However, EPA may approve different levels that West Virginia demonstrates will not interfere with the determination or imposition or applicable requirements.

Notwithstanding the Chief's authority to consider additional activities as insignificant on an application by application basis, West Virginia must ensure that, consistent with the requirements of section 70.5(c), the insignificant activities list approved as part of the West Virginia program will not be modified without prior EPA approval. West Virginia must also clarify that potential emissions from all insignificant activities or emissions units, whether included in section 3.2.d or determined by the Chief on an application by application basis, will be included in determining whether a source is a major source.

Notwithstanding the 45CSR30 provisions for insignificant activities, sections 4.1.b and 4.3 specifically require sources to provide all information necessary to evaluate the permit application and to determine the applicability of, or to impose, any applicable requirement.

Sections 70.4 and 70.6 Permit Content. West Virginia's regulations substantially meet the requirements of 40 CFR 70.4 and 40 CFR 70.6 for permit content. The following changes must be made in order to fully meet the requirements of 40 CFR 70.4 and 40 CFR 70.6:

1. For clarity and consistency with Part 70 and section 5.1, section 3.3.a must be revised to clarify that permits issued to major sources will include all applicable requirements that apply to the source, including those applicable requirements which may be later found to be applicable to one or more ''insignificant activities''.

2. Section 5.1.j.D. provides that permit provisions for emissions trading ''May include categories of VOC's which in the Chief's discretion can be substituted for one another in a production process.'' This provision is incorrectly placed in section 5.1.j., emissions trading, and should, instead be included in section 5.1.i., alternative operating scenarios. West Virginia must revise sections 5.1. i. and j. to clarify that permit provisions for emissions trading may not include categories of VOC's which in the Chief's discretion can be substituted for one another in a production process.

3. Section 5.3.e.A. must be revised to ensure that permits will contain provisions requiring compliance certifications to be submitted at least annually or such more frequent periods as specified by an applicable requirement or by the permitting authority.

4. Section 5.5 must be revised to clarify that for temporary sources that do not obtain a new preconstruction permit prior to each change in location, the operating permits shall include a requirement that the owner operator notify the Chief at least ten (10) days in advance of each change in location.

Section 70.7 Permit Issuance, Renewal, Reopenings, and Revisions. West Virginia's regulations substantially meet the requirements of 40 CFR 70.7 for permit issuance, renewal, reopenings, and revisions. EPA's concern over the ambiguity in section 6.4.a.E as to the procedural and compliance requirements necessary to administratively amend preconstruction permits into Title V permits was addressed by an October 11, 1994 supplemental Attorney General's opinion. In relevant part, the opinion states:

> Under 45CSR30.6.4.a.E, West Virginia's Title V administrative permit amendment procedure will be used to incorporate only those pre-construction permits issued under EPA-approved programs which have met procedural requirements substantially equivalent to the requirements of sections 6 and 7 of 45CSR30 that would be applicable to the change if it were subject to review as a permit modification, and which have also met compliance requirements substantially equivalent to those contained in section 5.

EPA's approval of this portion of West Virginia's program is based in part on the Attorney General's interpretation stated above. As such, EPA expects West Virginia to implement section 6.4.a.E consistent with the Attorney General's interpretation to fully meet the requirements of 40 CFR 70, § 70.7(d)(1)(v). Notwithstanding, the following changes must be made in order to fully meet the requirements of 40 CFR 70.7:

1. West Virginia must modify section 4.1 to require sources which become subject to the permitting program after

the effective date to submit permit applications within 12 months. During the interim, West Virginia must require sources which become subject to the permitting program after the effective date to submit permit applications within 12 months.

2. Section 6.5.a.A.(c) allows sources to make changes below established ''de minimis'' levels without having to undergo any type of permit modification. The July 21, 1992 version of Part 70 does not provide ''de minimis'' levels for source changes below which no permit modification is required. Accordingly, section 6.5.a.A.(c) must be removed. It should be noted that in most cases sources making changes below the thresholds established in section 6.5.a.A.(c) will be able to make such changes pursuant to the ''off-permit'' provisions of section 5.9. Additional flexibility for these types of changes may be provided in the Part 70 revisions process.

3. Section 6.8.a.A.(a)(B) must be revised to clarify that public notice will be given for all scheduled public hearings, not just those public hearings which have been scheduled at the request of an interested person.

4. West Virginia must revise section 6.8.a.C. to clarify that for all permit modification proceedings, except those modifications qualifying for minor permit modifications or fast-track modifications under the Acid Rain Program, public notice will be given by publication in a newspaper of general circulation in the area where the source is located (or in a state publication designed to give general public notice), and to persons on a mailing list developed by the permitting authority including those who request in writing to be on the list.

Section 70.11 Enforcement Authority. West Virginia's regulations and code provisions substantially meet the requirements of 40 CFR 70.11 for enforcement authority. However, W.Va. Code section 22–5–6(b)(1) impermissibly limits criminal penalties for knowing misrepresentations of material fact to a total of $25,000 without regard to the continuing nature of the misrepresentation. West Virginia must modify W.Va. Code section 22–5–6(b)(1) to provide for a maximum criminal penalty of not less than $10,000 per day per violation for knowing misrepresentations of material fact.

B. Variances

Unless parts of federally approved, promulgated and/or delegated applicable requirements, EPA regards the sections 5.7.D. and 6.9.c.D. references to variance provisions as wholly external to the program submitted for approval under Part 70, and consequently is proposing to take no action on such provisions. EPA has no authority to approve provisions of West Virginia law, such as the variance provisions referred to in this section, which are inconsistent with the CAA. EPA does not recognize the ability of a permitting authority to grant relief from the duty to comply with a federally enforceable Part 70 permit, except where such relief is granted through procedures allowed by Part 70. EPA reserves the right to enforce the terms of the Part 70 permit where the permitting authority purports to grant relief from the duty to comply with a Part 70 permit in a manner inconsistent with Part 70 procedures.

C. Permit Fee Demonstration

West Virginia's fee schedule is substantially less than the annual $25 + (1989 Base year) CPI per ton ''presumptive minimum'' established in section 502 of the Clean Air Act. Although West Virginia's fee demonstration/workload analysis reveals that the existing annual fee level, $18 + (1993 Base Year) CPI per ton, may generate adequate revenues to fund the direct and indirect projected program costs during the first four years of implementation, EPA is concerned about the flexibility of the fee structure in its ability to respond to resource needs in the future.

West Virginia's program provides that the Chief of West Virginia's Office of Air Quality (WVOAQ) shall, on or before October 1 of each fiscal year, prepare an accounting report to the Air Pollution Control Commission (APCC) of all Title V fees received from the previous fiscal year and the manner in which they were used, together with projected expenditures for the upcoming year. Accordingly, on or before May 1 of each year, the APCC shall determine whether to adjust the annual $18 + (1993 Base Year) CPI per ton fee amount. However, the APCC's ability to adjust fees is only authorized up to $2 per ton and is not cumulative, regardless of the amount needed.

EPA recognizes that many of the required permitting activities such as case-by-case MACT determinations are difficult to reasonably estimate in terms of cost and that revenues may be impacted by circumstances such as acid rain Phase II ''active'' substitution units which become temporarily exempt from the payment of emissions-based permit fees. In order to prevent permitting delays due to lack of resources and to maintain the quality of the 45CSR30 permitting program, West Virginia should provide the APCC with the authority to adjust permitting fees to a level at least equivalent to the ''presumptive minimum'' for a particular calendar year. As a result, the APCC will have greater flexibility in responding to resource needs without having to wait for legislative approval. The annual WVOAQ accounting of all Title V fees received and the manner used, will serve to ensure that revenues from Title V fees are expended solely to cover reasonable direct and indirect Title V costs, as required by 45CSR30, section 1.1.

All 45CSR30 fees collected by West Virginia will be deposited in a separate special account in the State treasury designated as the ''Air Pollution Control Fund''. Although fees collected pursuant to 45CSR22, Air Quality Management Fee Program, are also deposited in this account, an account tracking system will distinguish between revenues and expenditures attributable to 45CSR22 versus 45CSR30. In this way, West Virginia will be able to ensure that fees, penalties and interest collected for operating permits shall be expended solely to cover costs required to administer the operating permits program, as required by W. VA Code section 16–20–5(a)(18), and 45CSR30.1.1. Although the Chief's ability to spend the money collected from 45CSR30 fees is contingent on legislative appropriation, W. Va. Code section 16–20–5(a)(18) and 45CSR30.1.1 require fees to be sufficient to cover ''all reasonable direct and indirect costs required to administer the operating permits program''. As with other fee generating programs in the West Virginia, the legislature has the authority to transfer excess 45CSR30 monies into other accounts.

D. Provisions Implementing the Requirements of Title III

Implementing Title III Standards through Title V Permits. Under 45CSR30 (Title 45, Series 30, Legislative Rules, Air Pollution Control Commission, Requirements for Operating Permits) and West Virginia Code, section 16–20–5 (Air Pollution Control Law of West Virginia), West Virginia has demonstrated in its Title V program submittal broad legal authority to incorporate into permits and enforce all applicable requirements; however, West Virginia has also indicated that additional regulatory authority may be necessary to carry out specific CAA section 112 activities. West Virginia has therefore supplemented its broad legal authority with a commitment ''to adopt and submit all regulations required to

implement the provisions of section 112 of the Clean Air Act necessary under the Title V operating permit program.'' This commitment is stated in the transmittal letter of the November 12, 1993 operating permits program submittal. EPA has determined that this commitment, in conjunction with West Virginia's broad statutory authority, adequately assures compliance with all the CAA's section 112 requirements. EPA regards this commitment as an acknowledgement by West Virginia of its obligation to obtain further legal authority as needed to issue permits that assure compliance with the CAA's section 112 applicable requirements. This commitment does not substitute for compliance with Part 70 requirements that must be met at the time of program approval.

EPA is interpreting the above legal authority and commitment to mean that West Virginia is able to carry out all of the CAA's section 112 activities. For further rationale on this interpretation, please refer to the TSD accompanying this rulemaking which is located in the public docket and the April 13, 1993 guidance memorandum titled ''Title V Program Approval Criteria for Section 112 Activities,'' signed by John Seitz, Director, Office of Air Quality Planning and Standards, Office of Air and Radiation, USEPA.

Implementation of 112(g) Upon Program Approval. EPA is proposing to approve West Virginia's 45CSR30 operating permits program, 45CSR13 and 45CSR14 preconstruction permit programs, and authority under W. Va Code section 22–5–4(a)(5) to issue administrative orders for the purpose of implementing section 112(g) during the transition period between federal promulgation of a section 112(g) rule and West Virginia's adoption of 112(g) implementing regulations. EPA had until recently interpreted the CAA to require sources to comply with section 112(g) beginning on the date of approval of the Title V program regardless of whether EPA had completed its section 112(g) rulemaking. EPA has since revised this interpretation of the CAA as described in a February 14, 1995 **Federal Register** notice (see 60 FR 8333). The revised interpretation postpones the effective date of section 112(g) until after EPA has promulgated a rule addressing that provision. The rationale for the revised interpretation is set forth in detail in the February 14, 1995 interpretive notice.

The section 112(g) interpretive notice explains that EPA is still considering whether the effective date of section 112(g) should be delayed beyond the date of promulgation of the federal rule to allow states time to adopt rules implementing the federal rule, and that EPA will provide for any such additional delay in the final section 112(g) rulemaking. Unless and until EPA provides for such an additional postponement of section 112(g), West Virginia must be able to implement section 112(g) during the transition period between promulgation of the federal section 112(g) rule and adoption of West Virginia's implementing regulations.

EPA believes that, although West Virginia currently lacks a program designed specifically to implement section 112(g), West Virginia's 45CSR30 operating permits program, and 45CSR13 and 45CSR14 preconstruction permit programs will serve as adequate implementation vehicles during a transition period because they will allow West Virginia to select control measures that would meet MACT on a case-by-case basis, as defined in section 112, and incorporate these measures into federally enforceable source-specific permits. Section 112(g) requirements for case-by-case MACT determinations are governed by the provisions of the 45CSR30 operating permits program, sections 1.1, 2.6, 2.25, 4.1.a.B., and 12.2–12.4. In those situations when the Title V process cannot insure the MACT determination is made before the construction, reconstruction or modification takes place, West Virginia will use its preconstruction permitting procedures of 45CSR13 and 45CSR14 to the extent applicable to the source. Moreover, for those sources for which the Title V process is not suitable or for which preconstruction permits are not applicable, West Virginia will issue an administrative order pursuant to the authority of W. Va. Code section 22–5–4(a)(5) and 45CSR30.12 to apply the case-by-case MACT standard.

This proposed approval clarifies that West Virginia's 45CSR30 operating permits program, 45CSR13 and 45CSR14 preconstruction permit programs, and authority under W. Va. Code section 22–5–4(a)(5) to issue administrative orders are available as mechanisms to implement section 112(g) during the transition period between EPA's promulgation and West Virginia's adoption of section 112(g) rules. EPA is proposing to limit the duration of this approval to an outer limit of 18 months following promulgation by EPA of the section 112(g) rule. Comment is solicited on whether 18 months is an appropriate period taking into consideration West Virginia's procedures for adoption of regulations.

However, since this proposed approval is for the single purpose of providing a mechanism to implement section 112(g) during the transition period, the approval itself will be without effect if EPA decides in the final section 112(g) rule that sources are not subject to the requirements of the rule until State regulations are adopted.

Although section 112(l) generally provides the authority for approval of state air toxics programs, Title V and section 112(g) provide authority for this limited approval because of the direct linkage between implementation of section 112(g) and Title V. If West Virginia does not wish to implement section 112(g) through the proposed mechanisms discussed above and can demonstrate that an alternative means of implementing section 112(g) exists during the transition period, EPA may, in the final action approving West Virginia's Part 70 program, approve the alternative instead.

Program for Straight Delegation of Section 112 Standards. Requirements for approval, specified in 40 CFR 70.4(b), encompass section 112(l)(5) requirements for approval of a program for delegation of section 112 standards promulgated by EPA as they apply to Part 70 sources. Section 112(l)(5) requires that the state programs contain adequate authorities, adequate resources for implementation, and an expeditious compliance schedule, which are also requirements under Part 70. Therefore, EPA is also proposing to grant approval under section 112(l)(5) and 40 CFR 63.91 of West Virginia's program for receiving delegation of section 112 standards that are unchanged from the federal standards as promulgated. For EPA-promulgated rules which are applicable to sources in West Virginia, West Virginia intends to request delegation after adopting the rules at the State level, probably by incorporating the federal rules by reference. The details of this delegation mechanism will be established prior to delegating any section 112 standards under West Virginia's approved section 112(l) program for straight delegation. This program applies to both existing and future standards but is limited to sources covered by the Part 70 program.

E. Title IV Provisions/Commitments

As part of the November 12, 1994 program submittal, West Virginia committed to submit all missing portions of the Title IV acid rain program necessary to the Title V operating permits program by January 1, 1995. On December 15, 1994, West Virginia submitted an emergency rule to EPA which incorporates EPA's Part 72

rule by reference. On June 23, 1995, West Virginia submitted an identical permanent legislative rule to EPA, 45CSR33—''Acid Rain Provisions and Permits'', which supersedes the emergency rule submitted on December 15, 1994, and associated permit application forms. In the June 23, 1995 transmittal letter, West Virginia acknowledged that some of the provisions of 45CSR33 contain errors whereby the EPA Administrator's authorities are incorrectly granted to the Director of the Division of Environmental Protection and where conflicts between 45CSR33 and other state rules are addressed in a manner inconsistent with the approach in Part 72. West Virginia committed to seek amendments to fix these errors during the 1996 legislative session and to interpret 45CSR33 consistent with the requirements of Part 72 until the regulatory changes to 45CSR33 are adopted.

III. Request for Public Comments

EPA is soliciting public comments on the issues discussed in this notice or on other relevant matters. These comments will be considered before taking final action. Interested parties may participate in this federal rulemaking action by submitting written comments to the EPA Regional office listed in the **ADDRESSES** section of this notice.

Propsed Action

EPA is proposing to grant interim approval to the operating permits program submitted by West Virginia on November 12, 1993. The scope of West Virginia's Part 70 program applies to all Part 70 sources (as defined in the program) within West Virginia. In order to fully meet the requirements of the July 21, 1992 version of Part 70, West Virginia must make the following changes:

1. Revise the section 2.18 definition of ''Emissions unit'' to specifically include activities or parts of activities which emit or potentially emit pollutants listed under section 112(b) of the CAA.

2. Revise relevant portions of section 3.2.d as described above in this notice so as to ensure that permit applications will contain sufficient information needed to determine the applicability of, or to impose, all applicable requirements. West Virginia must also ensure that the insignificant activities list approved as part of the State's program will not be modified without prior EPA approval. Moreover, West Virginia must clarify that potential emissions from all insignificant activities or emissions units, whether included in section 3.2.d. or determined by the Chief on an application by application basis, will be included in determining whether a source is a major source.

3. Revise section 3.3.a to clarify that permits issued to major sources will include all applicable requirements that apply to the source, including those applicable requirements which may be later found to be applicable to one or more ''insignificant activities''.

5. Remove section 5.1.j.D. from section 5.1.j.

6. Revise section 5.3.e.A. to ensure that permits will contain provisions requiring compliance certifications to be submitted at least annually or such more frequent periods as specified by an applicable requirement or by the permitting authority.

7. Revise section 5.5 to clarify that for temporary sources that do not obtain a new preconstruction permit prior to each change in location, the operating permits shall include a requirement that the owner operator notify the Chief at least ten (10) days in advance of each change in location.

8. Modify section 4.1 so to require sources which become subject to the permitting program after the effective date to submit permit applications within 12 months.

9. Remove section 6.5.a.A.(c).

10. Revise section 6.8.a.A.(a).(B) to clarify that public notice will be given for all scheduled public hearings, not just those public hearings which have been scheduled at the request of an interested person.

11. Revise section 6.8.a.C. to clarify that for all permit modification proceedings, except those modifications qualifying for minor permit modifications or fast-track modifications under the Acid Rain Program, public notice will be given by publication in a newspaper of general circulation in the area where the source is located (or in a state publication designed to give general public notice), and to persons on a mailing list developed by the permitting authority including those who request in writing to be on the list.

12. Modify W. Va. Code § 22–5–6(b)(1) to provide for a maximum criminal penalty of not less than § 10,000 per day per violation for knowing misrepresentations of material fact.

This interim approval, which may not be renewed, extends for a period of up to 2 years. During the interim approval period, West Virginia is protected from sanctions for failure to have a fully approved Title V, Part 70 program, and EPA is not obligated to promulgate a federal permits program in West Virginia. Permits issued under a program with interim approval have full standing with respect to Part 70, and the 1-year time period for submittal of permit applications by subject sources begins upon interim approval, as does the 3-year time period for processing the initial permit applications.

Requirements for approval, specified in 40 CFR 70.4(b), encompass the CAA's section 112(l)(5) requirements for approval of a program for delegation of section 112 standards applicable to Part 70 sources as promulgated by EPA. Section 112(l)(5) requires that the State's program contain adequate authorities, adequate resources for implementation, and an expeditious compliance schedule, which are also requirements under Part 70. Therefore, EPA is also proposing under section 112(l)(5) and 40 CFR 63.91 to grant approval of West Virginia's program for receiving delegation of section 112 standards that are unchanged from federal standards as promulgated. This program for delegations only applies to sources covered by the Part 70 program.

The Office of Management and Budget has exempted this action from Executive Order 12866 review.

EPA's actions under section 502 of the Act do not create any new requirements, but simply address operating permits programs submitted to satisfy the requirements of 40 CFR part 70. Because this action does not impose any new requirements, it does not have a significant impact on a substantial number of small entities.

EPA has determined that this proposed interim approval action does not include a federal mandate that may result in estimated costs of $100 million or more to either state, local, or tribal governments in the aggregate, or to the private sector. This federal action to propose interim approval of West Virginia's operating permits program pursuant to Title V of the CAA and 40 CFR Part 70 approves pre-existing requirements under state or local law, and imposes no new federal requirements. Accordingly, no additional costs to state, local, or tribal governments, or to the private sector result from this action.

List of Subjects in 40 CFR Part 70

Environmental protection, Administrative practice and procedure, Air pollution control, Intergovernmental relations, Operating permits, Reporting and recordkeeping requirements.

Authority: 42 U.S.C. 7401–7671q.

Dated: August 18, 1995.

W. Michael McCabe,

Regional Administrator.

[FR Doc. 95–21406 Filed 8–28–95; 8:45 am]

BILLING CODE 6560–50–P

---

40 CFR Part 70

[NC–95–01; FRL–5288–2]

Clean Air Act Proposed Interim Approval of Operating Permit Program; North Carolina, Western North Carolina Mecklenburg County, Forsyth County

AGENCY: Environmental Protection Agency (EPA).

ACTION: Proposed interim approval.

SUMMARY: EPA proposes interim approval of the operating permit programs submitted by the State of North Carolina Department of Health, Environment and Natural Resources (DEHNR), Western North Carolina Regional Air Pollution Control Agency (WNCRAPCA), Forsyth County Department of Environmental Affairs (FCDEA), and Mecklenburg County Department of Environmental Protection (MCDEP) for the purpose of complying with Federal requirements which mandate that states develop, and submit to EPA, programs for issuing operating permits to all major stationary sources, and to certain other sources.

DATES: Comments on this proposed action must be received in writing by September 28, 1995.

ADDRESSES: Written comments on this action should be addressed to Carla E. Pierce, Chief, Air Toxics Unit/Title V Team, Air Programs Branch, at the EPA Region 4 office listed below. Copies of the DEHNR, WNCRAPCA, FCDEA, and MCDEP submittals and other supporting information used in developing the proposed interim approval are available for inspection during normal business hours at the following location: U.S. Environmental Protection Agency, Region 4, 345 Courtland Street, NE, Atlanta, GA 30365.

FOR FURTHER INFORMATION CONTACT: Scott Miller, Title V Program Development Team, Air Programs Branch, Air Pesticides & Toxics Management Division, U.S. Environmental Protection Agency, Region 4, 345 Courtland Street, NE, Atlanta, GA 30365, (404) 347–3555, Ext. 4153.

SUPPLEMENTARY INFORMATION:

I. Background and Purpose

A. Introduction

As required under title V of the Clean Air Act (''the Act'') as amended by the 1990 Clean Air Act Amendments, EPA promulgated rules on July 21, 1992 (57 FR 32250), that define the minimum elements of an approvable state operating permit program and the corresponding standards and procedures by which EPA will approve, oversee, and withdraw approval of state operating permit programs. These rules are codified at 40 Code of Federal Regulations (CFR) part 70. Title V and part 70 require that states develop, and submit to EPA, programs for issuing operating permits to all major stationary sources and to certain other sources.

The Act requires states to develop and submit these programs to EPA by November 15, 1993, and EPA to approve or disapprove each program within one year after receiving the submittal. If the State's submission is materially changed during the one-year review period, 40 CFR Part 70.4(e)(2) allows EPA to extend the review period for no more than one year following receipt of the additional materials. EPA received the DEHNR, WNCRAPCA, FCDEA, and MCDEP's title V operating permit program submittals on November 12, 1993. The State provided EPA with additional materials in supplemental submittals dated December 17, 1993, February 28, 1994, May 31, 1994, and August 9, 1995. Because these supplements materially changed the State's title V program submittal, EPA has extended the review period and will work expeditiously to promulgate a final decision on the State's program.

EPA reviews state operating permit programs pursuant to section 502 of the Act and 40 CFR part 70, which together outline criteria for approval or disapproval. Where a program substantially, but not fully, meets the requirements of part 70, EPA may grant the program interim approval for a period of up to two years. If EPA has not granted full or interim approval to a whole program by November 15, 1995, it must establish and implement a Federal operating permit program for that state.

B. Federal Oversight and Sanctions

If EPA grants interim approval to the DEHNR, WNCRAPCA, FCDEA, and MCDEP programs, the interim approval would extend for two years following the effective date of final interim approval, and could not be renewed. During the interim approval period, the State of North Carolina, WNCRAPCA, FCDEA, and MCDEP would not be subject to sanctions, and EPA would not be obligated to promulgate, administer, and enforce a Federal permit program for the State. Permits issued under a program with interim approval are fully effective with respect to part 70, and the 12-month time period for submittal of permit applications by sources subject to part 70 requirements begins upon the effective date of final interim approval, as does the three-year time period for processing the initial permit applications.

Following the granting of final interim approval, if the DEHNR, WNCRAPCA, FCDEA, or MCDEP failed to submit complete corrective programs for full approval by the date six months before expiration of the interim approval, EPA would start an 18-month clock for mandatory sanctions. If the DEHNR, WNCRAPCA, FCDEA, or MCDEP then failed to submit a corrective program that EPA found complete before the expiration of that 18-month period, EPA would be required to apply one of the sanctions in section 179(b) of the Act, which would remain in effect until EPA determined that DEHNR, WNCRAPCA, FCDEA, or MCDEP had corrected the deficiency by submitting a complete corrective program. Moreover, if the Administrator found a lack of good faith on the part of DEHNR, WNCRAPCA, FCDEA, or MCDEP, both sanctions under section 179(b) would apply after the expiration of the 18-month period and would extend until the Administrator determined that these programs had come into compliance. In any case, if, six months after application of the first sanction, DEHNR, WNCRAPCA, FCDEA, or MCDEP still had not submitted a corrective program that EPA found complete, the second sanction would be applied.

If, following final interim approval, EPA were to disapprove any of the North Carolina State or local program complete corrective programs, EPA would be required to apply one of the section 179(b) sanctions on the date 18 months after the effective date of the disapproval, unless prior to that date the DEHNR, WNCRAPCA, FCDEA, or MCDEP had submitted a revised program and EPA had determined that it corrected the deficiencies that prompted the disapproval. Moreover, if the Administrator found a lack of good faith on the part of the North Carolina State or local agencies, both sanctions under section 179(b) would apply after the expiration of the 18-month period until the Administrator determined that the North Carolina State or local agencies had come into compliance. In all cases, if six months after EPA applied the first sanction, the North Carolina State or local agencies had not submitted a revised program that EPA had determined corrected the deficiencies that prompted disapproval, a second sanction would be required.

In addition, discretionary sanctions may be applied where warranted any time after the end of an interim approval period if a state has not timely submitted a complete corrective program or EPA has disapproved a submitted corrective program. Moreover, if EPA has not granted full approval to a state program by the expiration of an interim approval and that expiration occurs after November 15, 1995, EPA must promulgate, administer, and enforce a Federal operating permit program for that state upon interim approval expiration.

II. Proposed Action and Implications

A. Analysis of State Submission

EPA believes that the operating permit programs submitted by the DEHNR, WNCRAPCA, FCDEA, and MCDEP substantially meet the requirements of title V and part 70, and EPA proposes to grant interim approval to these programs. For detailed information on the analysis of the State and local agency submission, please refer to the Technical Support Document (TSD) contained in the docket at the address noted above.

1. Support Materials

On November 12, 1993, EPA received the title V operating permit programs submitted by the DEHNR, WNCRAPCA, FCDEA, and MCDEP. The DEHNR requested, under the signature of the State of North Carolina Governor's designee, approval of its operating permit program with full authority to administer the program in all areas of the State of North Carolina, with the exceptions of Indian reservations and tribal lands. The State and local agencies submitted supplements to their title V operating permits programs submittals dated December 17, February 28, 1994, May 31, 1994, and July 27, 1995.

The DEHNR, WNCRAPCA, FCDEA, and MCDEP submittals address, in Section II entitled ''Complete Program Description,'' the requirement of 40 CFR Part 70.4(b)(1) by describing how the State and local agencies intend to carry out their responsibilities under the part 70 regulations. EPA believes the program descriptions are sufficient for meeting the requirement of 40 CFR Part 70.4(b)(1).

Pursuant to 40 CFR Part 70.4(b)(3), each state is required to submit a legal opinion from the Attorney General (or the attorney for the state air pollution control agency that has independent legal counsel) demonstrating adequate authority to carry out all aspects of the title V operating permit program. The DEHNR submitted a General Counsel Opinion and a Supplementary General Counsel Opinion demonstrating adequate legal authority as required by Federal law and regulation. WNCRAPCA, FCDEA, and MCDEP each submitted a General Counsel Opinion. EPA believes that these opinions adequately address the thirteen provisions listed at 40 CFR 70.4(b)(3)(i)–(xiii).

Section 70.4(b)(4) requires the submission of relevant permitting program documentation not contained in the regulations, such as permit application forms, permit forms, and relevant guidance to assist in the State's implementation of its permit program. Section IV of the DEHNR, WNCRAPCA, and FCDEA submittals and Appendix C of the MCDEP submittal include permit application forms. EPA has determined that the application forms meet the requirements of 40 CFR Part 70.5(c).

2. Regulations and Program Implementation

The State of North Carolina developed 15A North Carolina Administrative Code (NCAC) Subchapter 2Q.0500 entitled ''Title V Procedures'' for the implementation of the substantive requirements of 40 CFR part 70. The State also made changes to 15A NCAC 2Q.0200 and 15A NCAC 2Q.0100 to implement other part 70 requirements. These rules, and several other rules and statutes providing for State permitting and administrative actions, were submitted by North Carolina with sufficient evidence of procedurally correct adoption as required by 40 CFR Part 70.4(b)(2). The FCDEA adopted the State regulations verbatim in the Forsyth County Air Quality Technical Code (FCAQTC) Subchapter 3Q Sections .0500, .0100, and .0200. The WNCRAPCA adopted the State regulations verbatim in WNCRAPCA Rules and Regulations (WNCRAPCARR) Chapter 17 Sections .0500, .0100, and .0200. The MCDEP adopted the State regulations verbatim in Mecklenburg County Air Pollution Control Ordinance (MCAPCO) Article 1 Sections .5500, .5231, .5211. The local programs contain regulations that differ from the State program concerning the collection of title V fees. Since the local agency programs adopted the State regulations verbatim with the exception of fee collection, this proposed rulemaking will discuss the State regulations and how they meet the requirements of part 70 and follow with regulatory citations for the local agency regulations which implement the equivalent State regulation. Fee regulations will be discussed separately for each local agency.

The DEHNR program, in Regulation 15A NCAC 2Q.0502 (MCAPCO Regulation 1.5502, FCAQTC Regulation 3Q.0502, and WNCRAPCARR Regulation 17.0502), substantially meets the requirements of 40 CFR Part 70.2 and 70.3 regarding applicability. However, Regulation 15A NCAC 2Q.0502(c) (MCAPCO Regulation 1.5502(c), FCAQTC Regulation 3Q.0502(c), and WNCRAPCARR Regulation 17.0502(c)) allows Research and Development (R&D) facilities to be treated as separate facilities from other stationary facilities that are part of the same industrial grouping, are located on contiguous or adjacent property, and are under common control. Such an approach is inconsistent with the definition of major source found in 40 CFR Part 70.2, which requires all sources located on contiguous or adjacent properties, under common control, and belonging to a single major industrial grouping to be considered as the same facility. However, EPA notes that relatively few sources will be excluded from the scope of the State's title V program as a result of this approach. Moreover, the State has committed to undertake a rulemaking designed to assure that R&D facilities that are collocated with manufacturing facilities and which are under common control and belonging to a single major industrial grouping will be considered as the same facility for determining title V applicability to the source. Finalization of this rulemaking is a prerequisite to obtaining full program approval.

The DEHNR, WNCRAPCA, FCDEA, and MCDEP definition of ''title I modification'' does not include changes reviewed under a minor source preconstruction review program (''minor NSR changes''). The EPA is currently in the process of determining the proper definition of that phrase. As further explained below, EPA has solicited public comment on whether the phrase ''modification under any provision of title I of the Act'' in 40 CFR 70.7(e)(2)(i)(A)(5) should be interpreted to mean literally any change at a source that would trigger permitting authority review under regulations approved or promulgated under title I of the Act. This would include state preconstruction review programs approved by EPA as part of the State Implementation Plan under section 110(a)(2)(C) of the Clean Air Act.

On August 29, 1994, EPA proposed revisions to the interim approval criteria in 40 CFR 70.4(d) to, among other things, allow state programs with a more

narrow definition of ''title I modifications'' to receive interim approval (59 FR 44572). The Agency explained its view that the better reading of ''title I modifications'' includes minor NSR and pre-1990 NESHAP requirements, and solicited public comment on the proper interpretation of that term (59 FR 44573). The Agency stated that if, after considering the public comments, it continued to believe that the phrase ''title I modifications'' should be interpreted as including minor NSR changes, it would revise the interim approval criteria as needed to allow states with a narrower definition to be eligible for interim approval.

The EPA hopes to finalize its rulemaking revising the interim approval criteria under 40 CFR 70.4(d) expeditiously.[1] If EPA establishes in its rulemaking that the definition of ''title I modifications'' can be interpreted to exclude changes reviewed under minor NSR programs, the definition of ''title I modification'' would be fully consistent with part 70. Conversely, if EPA establishes through the rulemaking that the definition must include changes reviewed under minor NSR, the DEHNR, WNCRAPCA, FCDEA, and MCDEP definition of ''title I modifications'' will become a basis for interim approval. If the definition becomes a basis for interim approval as a result of EPA's rulemaking, the DEHNR, WNCRAPCA, FCDEA, and MCDEP would be required to revise their definition to conform to the requirements of part 70.

Accordingly, today's proposed approval does not identify the DEHNR, WNCRAPCA, FCDEA, and MCDEP definition of ''title I modification'' as necessary grounds for either interim approval or disapproval. Again, although EPA has reasons for believing that the better interpretation of ''title I modifications'' is the broader one, EPA does not believe that it is appropriate to determine whether this is a program deficiency until EPA completes its rulemaking on this issue.

The DEHNR program, in Regulation 15A NCAC 2Q.0507 and associated permit application forms (MCAPCO Regulation 1.5507, FCAQTC Regulation 3Q.0507, and WNCRAPCARR Regulation 17.0507), substantially meets the requirements of 40 CFR Part 70.5 for complete permit application forms. However, Regulation 15A NCAC 2Q.0507 (MCAPCO Regulation 1.5507, FCAQTC Regulation 3Q.0507, and WNCRAPCARR Regulation 17.0507) does not require an applicant to include all fugitive emissions regardless of whether such emissions will be used to determine title V applicability. Pursuant to 40 CFR Part 70.3(d), an applicant must include all fugitive emissions regardless of whether such emissions will be used to determine title V applicability. The State has committed to undertake a rulemaking designed to assure that this requirement in 40 CFR Part 70.3(d) is included in the State's regulations. Finalization of this rulemaking is a prerequisite to obtaining full program approval.

Section 70.4(b)(2) requires state and local agencies to include in their part 70 programs any criteria used to determine insignificant activities or emission levels for the purposes of determining complete applications. Section 70.5(c) states that an application for a part 70 permit may not omit information needed to determine the applicability of, or to impose, any applicable requirement, or to evaluate appropriate fee amounts. Section 70.5(c) also states that EPA may approve, as part of a state or local program, a list of insignificant activities and emissions levels which need not be included in permit applications. Under part 70, a state or local agency must request and EPA must approve as part of that program any activity or emission level that the state wishes to consider insignificant. Part 70, however, does not establish appropriate emission levels for insignificant activities, relying instead on a case-by-case determination of appropriate levels based on the particular circumstances of part 70 program under review.

For other state programs, EPA has proposed to accept, as sufficient for full approval, potential per emission unit levels for insignificant activities of 5 tons per year for criteria pollutants and the lesser of 1000 pounds per year or section 112(g) de minimis levels for hazardous air pollutants (HAP). Provided the State or local program does not allow applications to omit information needed to determine the applicability of, or to impose any applicable requirement, or to evaluate the fee amount required under the program's approved fee schedule, EPA believes that these levels are sufficiently below applicability thresholds for many applicable requirements to assure that no unit potentially subject to an applicable requirement is left off a title V application and are consistent with current permitting thresholds in the State of North Carolina.

The State and local agency title V programs include three different approaches to establishing insignificant activities and emissions levels. Regulation 15A NCAC 2Q.0102(b)(1) (MCAPCO Regulation 1.5211(e)(1), FCAQTC Regulation 3Q.0102(b)(1), and WNCRAPCARR Regulation 17.0102(b)(1)) establishes exemptions according to source category and activity. These activities are not required to be included in permit applications or permits issued by the State or local agencies. Regulation 15A NCAC 2Q.0102(b)(2) (MCAPCO Regulation 1.5211(e)(2), FCAQTC Regulation 3Q.0102(b)(2), and WNCRAPCARR Regulation 17.0102(b)(2)) establishes exemptions on the basis of size or production rate. These activities are required to be included in the permit application but are not required to be included in a facility's permit. Some of these activities are exempted at levels of up to 40 tpy for criteria pollutants. These levels are a substantial fraction of the major source threshold and would almost certainly exclude units with applicable requirements. EPA, therefore, finds that these emission levels are too high to be considered insignificant. EPA proposes that, in order to obtain full approval, the State must revise this regulation to revise these threshold levels downward from potential emissions of 40 tpy for these activities to potential per emission unit levels for insignificant activities of 5 tons per year for criteria pollutants and the lesser of 1000 pounds per year or section 112(g) de minimis levels for HAP or such other level as the State or local agencies can demonstrate will not be likely to interfere with determining and imposing an applicable requirement. Regulation 15A NCAC 2Q.0102(b)(2)(F) (MCAPCO Regulation 1.5211(e)(2)(F), FCAQTC Regulation 3Q.0102(b)(2)(F) and WNCRAPCARR Regulation 17.0102(b)(2)(F)) allows an applicant to demonstrate to the satisfaction of the respective air program Director that an activity would be negligible in air quality impacts, not require an air pollution control device, and not violate any applicable emission control standard when operating at maximum design capacity or maximum operating rate, whichever is greater. If an applicant could demonstrate that an activity qualified under the above criteria or conditions, the activity would then be considered as an insignificant activity. In order to obtain full program approval, the DEHNR, WNCRAPCA, FCDEA, and MCDEP must revise their

[1] Publication of the proposed interim approval criteria revisions was delayed until August 29, 1994, and EPA received several requests to extend the public comment period until November 27, 1994. Given the importance of the issues in that rulemaking to states, sources and the public, but mindful of the need to take action quickly, EPA agreed to extend the comment period until October 28, 1994 (see 59 FR 52122 (October 14, 1994)).

regulations to provide that any insignificant activity granted under 15A NCAC 2Q.0102(b)(2)(F) or other respective local agency regulations would be limited to potential per emission unit levels for insignificant activities of 5 tons per year for criteria pollutants and the lesser of 1000 pounds per year or section 112(g) de minimis levels for HAP.

EPA is requesting comment on the appropriateness of these emission levels for determining insignificant activities in the State of North Carolina. This request for comment is not intended to restrict the ability of the North Carolina State and local agencies to propose and EPA to approve other emission levels if the State and local agencies demonstrate that such alternative emission levels are insignificant compared to the level of emissions from and types of units that are permitted or subject to applicable requirements.

The DEHNR program, in Regulations 15A NCAC 2Q.0508 through 2Q.0513 and 2Q.0523 (MCAPCO Regulations 1.5508 through 1.5513 and 1.5523, FCAQTC Regulation 3Q.0508 through 3Q.0513 and 3Q.0523, and WNCRAPCARR Regulation 17.0508 through 17.0513 and 17.0523), substantially meets the requirements of 40 CFR Parts 70.4, 70.5, and 70.6 for permit content (including operational flexibility). The DEHNR, WNCRAPCA, FCDEA, and MCDEP programs do provide for limited use of off-permit changes as described in 40 CFR 70.4(b)(14). However, the State and local agency programs limit the use of off-permit to changes which are not governed by applicable requirements and changes which are insignificant activities that remain as insignificant activities after the change.

Part 70 requires prompt reporting of deviations from the permit requirements. Section 70.6(a)(3)(iii)(B) requires the permitting authority to define ''prompt'' in relation to the degree and type of deviation likely to occur and the applicable requirements. Although the permit program regulations should define ''prompt'' for purposes of administrative efficiency and clarity, an acceptable alternative is to define ''prompt'' in each individual permit. EPA believes that ''prompt'' should generally be defined as requiring reporting within two to ten days of the deviation. Two to ten days is sufficient time in most cases to protect public health and safety as well as to provide a forewarning of potential problems. For sources with a low level of excess emissions, a longer time period may be acceptable. However, prompt reporting must be more frequent than the semiannual reporting requirement, given this is a distinct reporting obligation under 40 CFR 70.6(a)(3)(iii)(A). Where ''prompt'' is defined in the individual permit but not in the program regulations, EPA may veto permits that do not contain sufficiently prompt reporting of deviations.

Regulation 15A NCAC 2Q.0508(f)(3) (MCAPCO Regulation 1.5508(f)(3), FCAQTC Regulation 3Q.0508(f)(3), and WNCRAPCARR Regulation 17.0508(f)(3)) defines ''prompt'' in the DEHNR program with respect to the reporting of deviations. The regulations require a permittee to report by the next business day deviations from permit requirements or any excess emissions and to follow up this report within two business days with a written report to the respective air pollution control agency.

The DEHNR, WNCRAPCA, FCDEA, and MCDEP have the authority to issue variances from requirements imposed by State law. North Carolina General Statutes (G.S.) 143–215.3E allows the DEHNR, WNCRAPCA, FCDEA, and MCDEP discretion to grant relief from compliance with State statutes and rules. EPA regards this provision as wholly external to the program submitted for approval under part 70, and consequently proposes to take no action on this provision of State law. EPA has no authority to approve provisions of state law, such as the variance provision referred to, that are inconsistent with title V or other applicable requirements of the Act and would render permits and the applicable requirements they implement unenforceable. EPA does not recognize the ability of a permitting authority to grant relief from the duty to comply with a Federally enforceable part 70 permit, except where such relief is consistent with the applicable requirements of the Act and is granted through the procedures allowed by part 70. A part 70 permit may be issued or revised (consistent with part 70 permitting procedures) to incorporate those terms of a variance that are consistent with applicable requirements. A part 70 permit may also incorporate, via part 70 permit issuance or modification procedures, the schedule of compliance set forth in a variance. However, EPA reserves the right to pursue enforcement of applicable requirements notwithstanding the existence of a compliance schedule in a permit to operate. This is consistent with 40 CFR 70.5(c)(8)(iii)(C), which states that a schedule of compliance ''shall be supplemental to, and shall not sanction noncompliance with, the applicable requirements on which it is based.''

Regulation 15A NCAC 2Q.0513 through 2Q.0516 and 2Q.0521 (MCAPCO Regulation 1.5513 through 1.5516 and 1.5521, FCAQTC Regulation 3Q.0513 through 3Q.0516 and 3Q.0521, and WNCRAPCARR Regulation 17.0513 through 17.5516 and 17.5521), substantially meets the permit processing requirements of 40 CFR 70.7 (including minor permit modifications) and 70.8. However, Regulation 15A NCAC 2Q.0514(a)(4) (MCAPCO Regulation 1.5514(a)(4), FCAQTC Regulation 3Q.0514(a)(4), and WNCRAPCARR Regulation 17.0514(a)(4)) allows administrative permit amendments to be used to change test dates or construction dates. While EPA believes that this is an acceptable way to utilize administrative permit amendments, EPA is concerned that this provision could be used to alter other requirements of the Act. The State has proposed changes to this regulation that if adopted will clarify that such changes can be accommodated under an administrative amendment such that no applicable requirements are violated. Regulation 15A NCAC 2Q.0514(a)(5) (MCAPCO Regulation 1.5514(a)(5), FCAQTC Regulation 3Q.0514(a)(5), and WNCRAPCARR Regulation 17.0514(a)(5)) allows administrative permit amendments to move terms and conditions from the State-enforceable only portion of the permit to the State-and-Federal enforceable portion of the permit. EPA does not believe that all such changes would qualify to be treated as administrative permit amendments. The State has proposed changes to this regulation that if adopted will clarify that 15A NCAC 2Q.0514(a)(5) will only be used for those requirements which have become Federally enforceable through section 110, 111, or 112 or other parts of the Clean Air Act. Regulation 15A NCAC 2Q.0515(f) (MCAPCO Regulation 1.5515(f), FCAQTC Regulation 3Q.0515(f), and WNCRAPCARR Regulation 17.0515(f)) grants a permit shield for minor permit modifications once a minor permit modification has been approved by the State and EPA. Section 70.7(e)(2)(vi) expressly prohibits a permit shield for minor permit modifications. The State has proposed changes to this regulation that if adopted will clarify that a permit shield may not be granted for minor permit modifications. Regulation 15A NCAC 2Q.0515(d) does not make provisions for the event a single minor permit modification would exceed the thresholds listed in Regulation 15A

NCAC 2Q.0515(c). In this instance, 40 CFR 70.7 requires that a minor permit modification be processed within 90 days after receiving an application or 15 days after the end of EPA's 45-day review period, whichever is later. The State has proposed changes to this regulation that if adopted will clarify in the event a single minor permit modification is submitted that exceeds the thresholds listed in Regulation 15A NCAC 2Q.0515(c) the minor permit modification will be processed within 90 days after receiving the minor permit modification or 15 days after the end of the EPA's 45-day review period, whichever is later. Regulation 15A NCAC 2Q.0517(b) (MCAPCO Regulation 1.5517(b), FCAQTC Regulation 3Q.0517(b), and WNCRAPCARR Regulation 17.0517(b)) stipulates that any permit reopening will be completed within 18 months after submittal of a complete application is required or within 18 months after the applicable requirement is promulgated if no application is required. Section 70.7(f) requires that a title V permit be reopened and the newly applicable requirement added within 18 months after the applicable requirement is promulgated regardless of whether a permit application is required to be submitted. The State has proposed changes to this regulation that if adopted will clarify that a title V permit be reopened and the new applicable requirement added within 18 months after the applicable requirement is promulgated. Regulation 15A NCAC 2Q.0517(b)(2) (MCAPCO Regulation 1.5517(b)(2), FCAQTC Regulation 3Q.0517(b)(2), and WNCRAPCARR Regulation 17.0517(b)(2)) requires that no reopening of a permit is required if the effective date of a new applicable requirement is after the expiration of the permit term. Section 70.7(f)(1)(i) stipulates that no reopening of a permit term is required if the effective date of a newly applicable requirement is after the expiration of the permit term unless the permit term was extended based on the fact that the State had not renewed the permit prior to the expiration of the permit. The State has proposed changes to this regulation that if adopted will clarify that no reopening of a permit term is required if the effective date of a newly applicable requirement is after the expiration of the permit term unless the permit term was extended based on the fact that the State had not renewed the permit prior to the expiration of the permit. Regulation 15A NCAC 2Q.0518(f) (MCAPCO Regulation 1.5517(f), FCAQTC Regulation 3Q.0517(f), and WNCRAPCARR Regulation 17.0517(f)) provides that final permit action will be taken within 18 months of a submittal of a completed application, subject to adjudication, for a significant permit modification or issuance of a title V permit. Section 70.7(a)(2) requires that a state must issue a final permit within 18 months after a complete application is received. Since this requirement is not subject to adjudication, the State has proposed changes to this regulation that if adopted will remove the phrase ''subject to adjudication'' from this regulation. Finalization of these proposed changes is required as a condition to full approval of the DEHNR, WNCRAPCA, FCDEA, and MCDEP programs.

The public participation requirements of 40 CFR 70.7(h) were addressed in Regulation 15A NCAC 2Q.0521 (MCAPCO Regulation 1.5521, FCAQTC Regulation 3Q.0521, and WNCRAPCARR Regulation 17.0521). The North Carolina State and local agency programs also substantially meet the requirements of 40 CFR 70.11 regarding enforcement authority.

The aforementioned TSD contains the detailed analysis of the DEHNR, WNCRAPCA, FCDEA, and MCDEP programs and describes the manner in which these program substantially meet all of the operating permit program requirements of 40 CFR part 70.

3. Permit Fee Demonstration

Section 502(b)(3) of the Act requires each permitting authority to collect fees sufficient to cover all reasonable direct and indirect costs necessary for the development and administration of its title V operating permit program. Each title V program submittal must contain either a detailed demonstration of fee adequacy or a demonstration that aggregate fees collected from title V sources meet or exceed $25 per ton of emissions per year (adjusted from 1989 by the Consumer Price Index (CPI)). The $25 per ton + CPI is presumed, for program approval, to be sufficient to cover all reasonable program costs and is thus referred to as the ''presumptive minimum.''

The State of North Carolina, Forsyth County, and Mecklenburg County have elected to assess a title V operating permit fee that is equivalent to the Federal presumptive minimum fee amount. These agencies do so by collecting an annual recurring flat fee in addition to collecting a fee per ton of actual emissions. When the annual recurring fee is added to the corresponding fee per ton of actual emissions, the result is that each agency is collecting the presumptive fee. Each agency's fee amounts differ based on program costs, number of air pollution-emitting facilities, and the amount of each regulated pollutant emitted that would produce the needed revenue for funding the title V permit program operations. The DEHNR assesses a $14.63 per ton fee plus an annual recurring flat fee of $5,100 for existing sources, $10,900 for a new title V source, $7,200 for every significant modification, $700 for every minor modification, and a $21,200 fee for every new title V source which is also a Prevention of Significant Deterioration (PSD) facility. The MCDEP assesses a per ton fee of $25 per ton plus the CPI. In addition, the County charges application fees for modifications, initial permit issuance, and a surcharge for complex processes which require greater staff time to evaluate. The FCDEA assesses a $24 per ton fee plus an annual recurring flat fee of $4000. Each of the three agencies submitted a fee demonstration which showed that the fees collected will adequately cover the anticipated costs of the operating permit program for the years 1995 through 1999.

The WNCRAPCA opted to charge less than the presumptive minimum fee. The Agency's program submittal, therefore, included a detailed fee demonstration in accordance with 40 CFR 70.9(b)(5). The fee demonstration showed that the Agency was in fact collecting fees adequate to support the title V permitting program. The Agency is charging $21.29 per ton as well as an annual recurring flat fee of $5000 per facility.

4. Provisions Implementing the Requirements of Other Titles of the Act

a. Authority for Section 112 Implementation

In its program submittal, the DEHNR, WNCRAPCA, FCDEA, and MCDEP agencies demonstrated adequate legal authority to implement and enforce all section 112 requirements through a title V permit. This legal authority is contained in the North Carolina General Statutes and in the North Carolina Administrative Code in regulatory provisions defining ''applicable requirements'' and provisions stating that permits must address all applicable requirements. EPA has determined that this legal authority is sufficient to allow the State to issue permits that assure compliance with all section 112 requirements.

EPA is interpreting the above legal authority to mean that the DEHNR, WNCRAPCA, FCDEA, and MCDEP agencies are able to carry out all section 112 activities with respect to part 70

and non-part 70 sources. For further rationale on this interpretation, please refer to the TSD.

b. Implementation of 112(g) Upon Program Approval

EPA issued an interpretive notice on February 14, 1995 (60 FR 8333), which outlines EPA's revised interpretation of 112(g) applicability. The notice postpones the effective date of 112(g) until after EPA has promulgated a rule addressing that provision. The notice sets forth in detail the rationale for the revised interpretation.

The section 112(g) interpretative notice explains that EPA is considering whether the effective date of section 112(g) should be delayed beyond the date of promulgation of the Federal rule so as to allow states time to adopt rules implementing the Federal rule, and that EPA will provide for any such additional delay in the final section 112(g) rulemaking. Unless and until EPA provides for such an additional postponement of section 112(g), the North Carolina State and local agencies must have a Federally enforceable mechanism for implementing section 112(g) during the period between promulgation of the Federal section 112(g) rule and adoption of implementing State regulations.

EPA is aware that the DEHNR, WNCRAPCA, FCDEA, and MCDEP lack a program designed specifically to implement section 112(g). However, the DEHNR, WNCRAPCA, FCDEA, and MCDEP do have preconstruction review programs that can serve as adequate implementation vehicles during the transition period because it would allow the State and local programs to select control measures that would meet maximum achievable control technology (MACT), as defined in section 112, and incorporate these measures into a Federally enforceable preconstruction permit.

For this reason, EPA proposes to approve the use of the State of North Carolina's preconstruction review program found in Regulation 15A NCAC 2Q.0300 through 15A NCAC 2Q.0311 (MCAPCO Regulation 1.5210 through 1.5221, FCAQTC Regulation 3Q.0300 through 3Q.0311, and WNCRAPCARR Regulation 17.0300 through 17.0311), under the authority of title V and part 70, solely for the purpose of implementing section 112(g) to the extent necessary during the transition period between EPA's section 112(g) regulation promulgation and adoption of a State rule implementing EPA's section 112(g) regulations. Although section 112(l) generally provides authority for approval of state air programs to implement section 112(g), title V and section 112(g) provide for this limited approval because of the direct linkage between the implementation of section 112(g) and title V. The scope of this approval is narrowly limited to section 112(g) and does not confer or imply approval for purpose of any other provision under the Act (e.g., section 110). This approval will be without effect if EPA decides in the final section 112(g) rule that sources are not subject to the requirements of the rule until State and local regulations are adopted. The duration of this approval is limited to 18 months following promulgation by EPA of the section 112(g) rule to provide adequate time for the State and local agencies to adopt regulations consistent with the Federal requirements.

c. Program for Delegation of Section 112 Standards as Promulgated

The requirements for part 70 program approval, specified in 40 CFR 70.4(b), encompass section 112(l)(5) requirements for approval of a state program for delegation of section 112 standards promulgated by EPA as they apply to title V sources. Section 112(l)(5) requires that the DEHNR, WNCRAPCA, FCDEA, and MCDEP programs contain adequate authorities, adequate resources for implementation, and an expeditious compliance schedule, which are also requirements under part 70. Therefore, EPA also proposes to grant approval, under section 112(l)(5) and 40 CFR 63.91, of the DEHNR, WNCRAPCA, FCDEA, and MCDEP programs for receiving delegation of future section 112 standards and infrastructure programs that are unchanged from the Federal standards as promulgated. In addition, EPA proposes delegation of all existing standards and infrastructure programs under 40 CFR parts 61 and 63 for part 70 sources and non-part 70 sources.[2]

The DEHNR, WNCRAPCA, FCDEA, and MCDEP agencies have informed EPA that they intend to accept the delegation of future section 112 standards on an automatic basis. The details of this delegation mechanism are set forth in an addendum to the North Carolina State and local agencies' title V program submittals.

d. Commitment to Implement Title IV of the Act

The DEHNR, WNCRAPCA, FCDEA, and MCDEP committed to take action, following promulgation by EPA of regulations implementing sections 407 and 410 of the Act, or revisions to either part 72 or the regulations implementing sections 407 or 410, to either incorporate the revised provisions by reference or submit State and local regulations implementing these provisions. In a subsequent review, it was found that several additions were needed to the acid rain regulations for the State and local agency rules to be adequate. In a letter dated August 7, 1995, the State committed to ensure that an acid rain rule which is acceptable to EPA will be state-effective by April 1, 1996. The WNCRAPCA, FCDEA, and MCDEP have agreed to update their regulations upon the State's finalization of an acceptable acid rain regulation.

B. Proposed Actions

EPA proposes interim approval of the operating permit programs submitted by the DEHNR, WNCRAPCA, FCDEA, and MCDEP on November 12, 1993, and as supplemented on December 17, 1993, February 28, 1994, May 31, 1994, and July 27, 1995. If promulgated, the DEHNR, WNCRAPCA, FCDEA, and MCDEP must make the following changes to receive full approval:

1. Definition of ''Major Source''

To obtain full approval, the DEHNR, WNCRAPCA, FCDEA, and MCDEP must complete a rulemaking removing Regulation 15A NCAC 2Q.0502(c) (MCAPCO Regulation 1.5502(c), FCAQTC Regulation 3Q.0502(c), and WNCRAPCARR Regulation 17.0502(c)) to assure that R&D facilities which are collocated with manufacturing facilities and which are under common control and belonging to a single major industrial grouping will be considered as the same facility for determining title V major source applicability for a facility.

2. Inclusion of Fugitive Emissions in Permit Applications

To obtain full approval, the DEHNR, WNCRAPCA, FCDEA, and MCDEP must amend their regulations such that an applicant must include all fugitive emissions regardless of whether such emissions will be used to determine title V applicability.

[2] The radionuclide National Emission Standards for Hazardous Air Pollutant (NESHAP) is a section 112 regulation and therefore, also an applicable requirement under the State operating permits program for part 70 sources. There is not yet a Federal definition of ''major'' for radionuclide sources. Therefore, until a major source definition for radionuclide is promulgated, no source would be a major section 112 source solely due to its radionuclide emissions. However, a radionuclide source may, in the interim, be a major source under part 70 for another reason, thus requiring a part 70 permit. EPA will work with the State in the development of its radionuclide program to ensure that permits are issued in a timely manner.

3. Insignificant Activities

To obtain full approval, the DEHNR, WNCRAPCA, FCDEA, and MCDEP must revise Regulation 15A NCAC 2Q.0102(b)(2)(B) to adjust the insignificant emission threshold levels downward from potential emissions of 40 tpy to potential per emission unit levels for insignificant activities of 5 tons per year for criteria pollutants and the lesser of 1000 pounds per year or section 112(g) de minimis levels for HAP. The DEHNR, WNCRAPCA, FCDEA, and MCDEP must also revise Regulation 15A NCAC 2Q.0102(b)(2)(F) to provide that the list granted under 15A NCAC 2Q.0102(b)(2)(F) must be subject to the above-mentioned potential emission caps.

4. Administrative Permit Amendment Applicability

To obtain full approval, the DEHNR, WNCRAPCA, FCDEA, and MCDEP must change Regulation 15A NCAC 2Q.0514(a)(4) to clarify that administrative permit amendments may be used to change test dates or construction dates only as long as no applicable requirements would be violated by doing so. Also, the DEHNR, WNCRAPCA, FCDEA, and MCDEP agencies must change the language of Regulation 15A NCAC 2Q.0514(a)(4) to clarify an administrative permit amendment may used to move terms and conditions from the State-enforceable side of the permit to the State and Federal enforceable portion of the permit provided that the term being moved is a requirement which has become Federally enforceable through sections 110, 111, or 112 or other parts of the Clean Air Act.

5. Minor Permit Modifications

To obtain full approval, the DEHNR, WNCRAPCA, FCDEA, and MCDEP must change Regulation 15A NCAC 2Q.0515(f) to stipulate that a permit shield may not be granted for any minor permit modification. In addition, to obtain full approval, the DEHNR, WNCRAPCA, FCDEA, and MCDEP must change Regulation 15A NCAC 2Q.0515(d) to specify that in the event an applicant submits a single minor permit modification which exceeds the thresholds listed in 15A NCAC 2Q.0515(c), the minor permit modification must be processed within 90 days after receiving the application or 15 days after the end of EPA's 45 day review period, whichever is later.

6. Permit Reopenings To Incorporate Newly Applicable Requirements

To obtain full approval, the DEHNR, WNCRAPCA, FCDEA, and MCDEP must amend Regulation 15A NCAC 2Q.0517(b) to provide that a title V permit shall be reopened and reissued within 18 months after a newly applicable requirement is promulgated. Also, to obtain full approval, the DEHNR, WNCRAPCA, FCDEA, and MCDEP must amend Regulation 15A NCAC 2Q.0517(b)(2) to clarify that no reopening of a permit is required only if the effective date of a newly applicable requirement is after the expiration of the permit, unless the term of the permit was extended based on the fact that the DEHNR, WNCRAPCA, FCDEA, and MCDEP had not renewed the permit prior to its expiration.

7. Final Action on Permit Issuance

To obtain full approval, the DEHNR, WNCRAPCA, FCDEA, and MCDEP must amend Regulation 15A NCAC 2Q.0518(f) to remove the phrase ''subject to adjudication.''

This interim approval, which may not be renewed, extends for a period of up to two years. During the interim approval period, the DEHNR, WNCRAPCA, FCDEA, and MCDEP are protected from sanctions for failure to have a program, and EPA is not obligated to promulgate a Federal operating permit program in the State. Permits issued under a program with interim approval have full standing with respect to part 70, and the one-year time period for submittal of permit applications by subject sources begins upon interim approval, as does the three-year time period for processing the initial permit applications.

The scope of the DEHNR, WNCRAPCA, FCDEA, and MCDEP part 70 programs that EPA proposes to interimly approve in this notice would apply to all part 70 sources (as defined in the approved program) within the State, except any sources of air pollution over which an Indian Tribe has jurisdiction. *See, e.g.*, 59 FR 55813, 55815–18 (Nov. 9, 1994). The term ''Indian Tribe'' is defined under the Act as ''any Indian tribe, band, nation, or other organized group or community, including any Alaska Native village, which is Federally recognized as eligible for the special programs and services provided by the United States to Indians because of their status as Indians.'' *See* section 302(r) of the CAA; *see also* 59 FR 43956, 43962 (Aug. 25, 1994); 58 FR 54364 (Oct. 21, 1993).

As discussed above in section II.A.4.c., EPA also proposes to grant approval under section 112(l)(5) and 40 CFR 63.91 to the DEHNR, WNCRAPCA, FCDEA, and MCDEP for receiving delegation of future section 112 standards and infrastructure programs that are unchanged from Federal standards as promulgated. In addition, EPA proposes to delegate existing standards and infrastructure programs under 40 CFR parts 61 and 63 for both part 70 sources and non-part 70 sources.

III. Administrative Requirements

A. Request for Public Comments

EPA requests comments on all aspects of this proposed interim approval. Copies of the DEHNR, WNCRAPCA, FCDEA, and MCDEP submittals and other information relied upon for the proposed interim approval are contained in docket number NC–95–01 maintained at the EPA Regional Office. The docket is an organized and complete file of all the information submitted to, or otherwise considered by, EPA in the development of this proposed interim approval. The principal purposes of the docket are:

(1) to allow interested parties a means to identify and locate documents so that they can effectively participate in the approval process; and

(2) to serve as the record in case of judicial review. EPA will consider any comments received by September 28, 1995.

B. Executive Order 12866

The Office of Management and Budget has exempted this action from Executive Order 12866 review.

C. Regulatory Flexibility Act

EPA's actions under section 502 of the Act do not create any new requirements, but simply address operating permit programs submitted to satisfy the requirements of 40 CFR part 70. Because this action does not impose any new requirements, it does not have a significant impact on a substantial number of small entities.

D. Unfunded Mandates Reform Act of 1995

Under section 202 of the Unfunded Mandates Reform Act of 1995 (''Unfunded Mandates Act''), signed into law on March 22, 1995, EPA must prepare a budgetary impact statement to accompany any proposed or final rule that includes a Federal mandate that may result in estimated costs to State, local, or tribal governments in the aggregate, or to the private sector, of $100 million or more. Under section 205, EPA must select the most cost-effective and least burdensome alternative that achieves the objectives of the rule and is consistent with statutory requirements. Section 203 requires EPA to establish a plan for informing and advising any small

governments that may be significantly or uniquely impacted by the rule.

EPA has determined that the proposed interim approval action promulgated today does not include a Federal mandate that may result in estimated costs of $100 million or more to State, local, or tribal governments in the aggregate, or to the private sector. This Federal action approves pre-existing requirements under State or local law, and imposes no new Federal requirements. Accordingly, no additional costs to State, local, or tribal governments, or to the private sector, result from this action.

List of Subjects in 40 CFR Part 70

Environmental protection, Administrative practice and procedure, Air pollution control, Intergovernmental relations, Operating permits, Reporting and recordkeeping requirements.

Authority: 42 U.S.C. 7401–7671q.

Dated: August 18, 1995.

Patrick M. Tobin,

Acting Regional Administrator.

[FR Doc. 95–21415 Filed 8–28–95; 8:45 am]

BILLING CODE 6560–50–P

FEDERAL EMERGENCY MANAGEMENT AGENCY

44 CFR Part 67

[Docket No. FEMA–7146]

Proposed Flood Elevation Determinations

AGENCY: Federal Emergency Management Agency (FEMA).

ACTION: Proposed rule.

SUMMARY: Technical information or comments are requested on the proposed base (1% annual chance) flood elevations and proposed base flood elevation modifications for the communities listed below. The base flood elevations and modified base flood elevations are the basis for the floodplain management measures that the community is required either to adopt or to show evidence of being already in effect in order to qualify or remain qualified for participation in the National Flood Insurance Program (NFIP).

DATES: The comment period is ninety (90) days following the second publication of this proposed rule in a newspaper of local circulation in each community.

ADDRESSES: The proposed base flood elevations for each community are available for inspection at the office of the Chief Executive Officer of each community. The respective addresses are listed in the following table.

FOR FURTHER INFORMATION CONTACT: Michael K. Buckley, P.E., Chief, Hazard Identification Branch, Mitigation Directorate, 500 C Street, SW., Washington, DC 20472, (202) 646–2756.

SUPPLEMENTARY INFORMATION: The Federal Emergency Management Agency proposes to make determinations of base flood elevations and modified base flood elevations for each community listed below, in accordance with Section 110 of the Flood Disaster Protection Act of 1973, 42 U.S.C. 4104, and 44 CFR 67.4(a).

These proposed base flood and modified base flood elevations, together with the floodplain management criteria required by 44 CFR 60.3, are the minimum that are required. They should not be construed to mean that the community must change any existing ordinances that are more stringent in their floodplain management requirements. The community may at any time enact stricter requirements of its own, or pursuant to policies established by other Federal, State, or regional entities. These proposed elevations are used to meet the floodplain management requirements of the NFIP and are also used to calculate the appropriate flood insurance premium rates for new buildings built after these elevations are made final, and for the contents in these buildings.

National Environmental Policy Act

This proposed rule is categorically excluded from the requirements of 44 CFR Part 10, Environmental Consideration. No environmental impact assessment has been prepared.

Regulatory Flexibility Act

The Associate Director, Mitigation Directorate, certifies that this proposed rule is exempt from the requirements of the regulatory Flexibility Act because proposed or modified base flood elevations are required by the Flood Disaster Protection Act of 1973, 42 U.S.C. 4104, and are required to establish and maintain community eligibility in the NFIP. No regulatory flexibility analysis has been prepared.

Regulatory Classification

This proposed rule is not a significant regulatory action under the criteria of Section 3(f) of Executive Order 12866 of September 30, 1993, Regulatory Planning and Review, 58 FR 51735.

Executive Order 12612, Federalism

This proposed rule involves no policies that have federalism implications under Executive Order 12612, Federalism, dated October 26, 1987.

Executive Order 12778, Civil Justice Reform

This proposed rule meets the applicable standards of Section 2(b)(2) of Executive Order 12778.

List of Subjects in 44 CFR Part 67

Administrative practice and procedure, Flood insurance, Reporting and recordkeeping requirements.

Accordingly, 44 CFR Part 67 is proposed to be amended as follows:

PART 67—[AMENDED]

1. The authority citation for Part 67 continues to read as follows:

Authority: 42 U.S.C. 4001 *et seq.;* Reorganization Plan No. 3 of 1978, 3 CFR, 1978 Comp., p. 329; E.O. 12127, 44 FR 19367, 3 CFR, 1979 Comp., p. 376.

§ 67.4 [Amended]

2. The tables published under the authority of § 67.4 are proposed to be amended as follows:

State	City/town/county	Source of flooding	Location	#Depth in feet above ground. *Elevation in feet. (NGVD)	
				Existing	Modified
Arkansas	Calhoun County (Unincorporated Areas).	Two Bayou Main Canal	Approximately 300 feet downstream of State Highway 4.	None	*113
			Just downstream of a railroad spur located approximately 2,000 feet upstream of confluence of Dogwood Creek.	None	*123

State	City/town/county	Source of flooding	Location	#Depth in feet above ground. *Elevation in feet. (NGVD)	
				Existing	Modified
			Just downstream of State Highway 274 ...	None	*127
			Approximately 200 feet upstream of divergence from Two Bayou Old Channel.	None	*135
			Approximately 900 feet downstream of State Highway 203 and East Camden and Highland Railroad.	None	*155
			Approximately 17,540 feet upstream of East Camden and Highland Railroad.	None	*185
		Two Bayou Old Channel ..	Approximately 300 feet downstream of State Highway 274.	None	*120
			At County Road	None	*128
			Approximately 1,000 feet downstream of divergence from Two Bayou Main Canal.	None	*134
		Dogwood Creek	Approximately 200 feet upstream of confluence with Two Bayou Main Canal.	None	*120
			Approximately 200 feet upstream of State Highway 274.	None	*135
			Approximately 200 feet upstream of State Highway 203.	None	*175
			Approximately 11,680 feet upstream of State Highway 203.	None	*205
		Dogwood Creek Tributary .	Approximately 700 feet upstream of confluence with Dogwood Creek.	None	*145
			Just upstream of an unnamed road located approximately 8,240 feet above mouth.	None	*152

Maps are available for inspection at the Calhoun County Judge's Office, County Courthouse (in County Square), Second and Main Streets, Hampton, Arkansas.

Send comments to The Honorable Arthur Jones, County Judge, Calhoun County, County Courthouse, P.O. Box 626, Hampton, Arkansas 71744.

California	Carlsbad (City) San Diego County.	Agua Hedionda Creek	Approximately 1,400 feet downstream of El Camino Real Drive.	N/A	*32
			Approximately 1,400 feet downstream of El Camino Real (right levee removed).	N/A	*30
			Approximately 1,400 feet downstream of El Camino Real (left bank flow).	N/A	*37
			Approximately 100 feet upstream of Rancho Carlsbad (upstream crossing).	N/A	*61
			Approximately 100 feet upstream of an unnamed road (approximately 8,200 feet upstream of El Camino Real).	N/A	*102
		Calavera Creek	At confluence with Agua Hedionda Creek (south side of floodwall).	N/A	*48
			At confluence with Agua Hedionda Creek (north side of floodwall).	N/A	*39
			Just upstream of the floodwall	N/A	*61
			Approximately 700 feet upstream of confluence with Calavera Creek Splitflow.	N/A	*74
		Calavera Creek Splitflow ..	Approximately 700 feet upstream of confluence with Calavera Creek.	N/A	*73

Maps are available for inspection at the Engineering Department, City of Carlsbad, 2075 Las Palmas Drive, Carlsbad, California.

Send comments to Mr. Ray Patchett, City Manager, City of Carlsbad, 1200 Carlsbad Village Drive, Carlsbad, California 92008.

California	Chula Vista (City) San Diego County.	Poggi Canyon Creek	Approximately 2,200 feet upstream of Oleander Avenue.	None	*207
			Approximately 2,500 feet upstream of Oleander Avenue.	None	*212
		Telegraph Canyon Creek .	170 feet upstream of Telegraph Canyon Road.	None	*344
			50 feet downstream of Otay Lakes Road .	None	*451
			3,540 feet upstream of Otay Lakes Road	*499	*499

State	City/town/county	Source of flooding	Location	#Depth in feet above ground. *Elevation in feet. (NGVD)	
				Existing	Modified
Maps are available for inspection at City of Chula Vista, City Hall, 276 Fourth Avenue, Chula Vista, California.					
Send comments to The Honorable Shirley Horton, Mayor, City of Chula Vista, 276 Fourth Avenue, Chula Vista, California 91910.					
California	El Cajon (City) San Diego County.	Forester Creek	Approximately 110 feet below Terra Lane	*542	*541
			At Terra Lane	*543	*542
			Approximately 65 feet upstream of Terra Lane at corporate limits.	*545	*542
Maps are available for inspection at the Department of Public Works, City of El Cajon, 200 East Main Street, El Cajon, California.					
Send comments to Mr. Bob Acker, City Manager, City of El Cajon, 200 East Main Street, El Cajon, California 92020.					
California	Escondido (City) San Diego County.	Maywood Wash	50 feet of intersection of La Honda Drive and Dippon Lane.	None	#1
		Kit Carson Park Creek	1,200 feet downstream of Via Rancho Parkway (at Lake Hodges).	*327	*326
		Reidy Creek	Approximately 19,000 feet upstream of confluence with Escondido Creek.	*740	*740
			Just upstream of the North Broadway Avenue Bridge.	*750	*753
			Approximately 20,500 feet upstream of confluence with Escondido Creek.	*752	*754
			Approximately 22,050 feet upstream of confluence with Escondido Creek.	*766	*767
			Approximately 22,550 feet upstream of confluence with Escondido Creek.	*770	*770
Maps are available for inspection at the Public Works Department, City of Escondido, 201 North Broadway, Escondido, California.					
Send comments to The Honorable Sid Hollins, Major, City of Escondido, 201 North Broadway, Escondido, California 92025.					
California	Oceanside (City) San Diego County.	Pilgrim Creek	Approximately 2,300 feet downstream of confluence with Windmill Canyon.	N/A	*52
			Approximately 1,600 feet upstream of confluence with Windmill Canyon.	N/A	*56
			Approximately 3,600 feet upstream of confluence with Windmill Canyon.	N/A	*57
Maps are available for inspection at the City of Oceanside Engineering Department, 300 North Hill Street, Oceanside, California.					
Send comments to The Honorable Dick Lyon, Mayor, City of Oceanside, 300 North Hill Street, Oceanside, California 92054.					
California	Poway (City) San Diego County.	Pomerado Creek	At confluence with Poway Creek	None	*428
			Approximately 100 feet downstream of McFerron Road.	None	*459
			Approximately 250 feet upstream of Tassel Road.	None	*468
			Just upstream of Holland Road	None	*507
			Approximately 50 feet downstream of Glenoak Road.	None	*516
Maps are available for inspection at the Engineering Department, City of Poway, 13325 Civic Center Drive, Poway, California.					
Send comments to The Honorable Don Higginson, Major, City of Poway, P.O. Box 789, Poway, California 92074.					
California	San Diego (City) San Diego County.	Lusardi Creek	Approximately 4,200 feet upstream of confluence with San Diequito River.	None	*122
			Approximatey 5,500 feet upstream of confluence with San Diequito River.	None	*134
		Beeler Creek	1,200 feet downstream of Old Pomerado Road.	None	*446
			500 feet downstream of Old Pomerado Road.	None	*457
			Approximately 1.6 miles upstream of Pomerado Road.	None	*604
			Approximately 2.1 miles upstream of Pomerado Road.	None	*636
		Carroll Canyon Creek	950 feet upstream of Willow Creek Road	None	*523

State	City/town/county	Source of flooding	Location	#Depth in feet above ground. *Elevation in feet. (NGVD)	
				Existing	Modified
			Approximately 2,500 feet downstream of Avenida Magnifica.	None	*559
		Rose Canyon Creek	450 feet downstream of Balboa Avenue ..	None	*13
			200 feet downstream of Mission Bay Drive.	None	*17
			1,350 feet upstream of Interstate Highway 805.	None	*261
			1,800 feet upstream of Interstate Highway 805.	None	*265
		Soledad Canyon	Upstream side of North Torrey Pines Road.	None	*11
			2,000 feet upstream of North Torrey Pines Road.	None	*12

Maps are available for inspection at the Engineering Department, City of San Diego, 202 C Street, San Diego, California.

Send comments to The Honorable Susan Golding, Mayor, City of San Diego, 202 C Street, 11th Floor, San Diego, California 92101.

California	San Diego County (Unincorporated Areas).	Witch Creek	Approximately 7,700 feet upstream of confluence with Santa Ysabel Creek.	None	*2,487
			Approximately 11,360 feet upstream of confluence with Santa Ysabel Creek.	None	*2,566
			Approximately 11,900 feet upstream of confluence with Santa Ysabel Creek.	None	*2,723
			Approximately 18,100 feet upstream of confluence with Santa Ysabel Creek.	None	*2,782
		Rainbow Creek	Approximately 100 feet downstream of Old Highway 395.	None	*1,028
			At Fifth Street	None	*1,036
			At Huffstatler Street	None	*1,044
			At Rainbow Valley Boulevard	None	*1,049
			Approximately 4,225 feet upstream of Rainbow Valley Boulevard.	None	*1,073
		Rainbow Creek (West Branch)..	At confluence with Rainbow Creek	None	*1,044
			At First Street	None	*1,058
			Approximately 1,900 feet upstream of First Street.	None	*1,070
		Steele Canyon Creek	Approximately 480 feet upstream of confluence with Sweetwater River.	None	*313
			At Miller Ranch Road	None	*325
			At Stony Oak Drive	None	*472
			At Aurora Vista Road	None	*530
			At Vista Sage Lane	None	*754
			Approximately 2,300 feet upstream of Vista Sage Lane.	None	*804
		Eucalyptus Hills Creek (East Branch).	Approximately 700 feet above confluence with San Diego River.	None	*374
			At Riverside Drive	None	*381
			At Lakeside Avenue	None	*388
			Approximately 2,630 feet upstream of Lakeside Avenue.	None	*424
		Eucalyptus Hills Creek (West Branch).	Approximately 950 feet downstream of Riverside Drive.	None	*374
			At Riverside Drive	None	*375
			Approximately 0.75 mile upstream of Riverside Drive.	None	*423
			Approximately 1.25 miles upstream of Riverside Drive.	None	*519
		Lusardi Creek	At confluence with San Diequito River	None	*57
			Approximately 3,000 feet upstream of confluence with San Diequito River.	None	*90
			Approximately 5,500 feet upstream of confluence with San Diequito River.	None	*134
		Beaver Hollow Creek	Approximately 2,700 feet upstream of confluence with Sweetwater River.	None	*1,076
			Approximately 5,500 feet upstream of confluence with Sweetwater River.	None	*1,134
			Approximately 9,900 feet upstream of confluence with Sweetwater River.	None	*1,273

State	City/town/county	Source of flooding	Location	#Depth in feet above ground. *Elevation in feet. (NGVD)	
				Existing	Modified
			Approximately 14,530 feet upstream of confluence with Sweetwater River.	None	*1,447
		Tributary to Sweetwater River.	Approximately 600 feet downstream of Easement Road.	None	*128
			At Proctor Valley Road	None	*147
			At El Rancho Grande Road	None	*200
			At San Miguel Road	None	*244
			Approximately 1,350 feet upstream of San Miguel Road.	None	*268
		Buena Creek	Approximately 120 feet downstream of Buena Creek Road.	620	*620
			At Sugar Bush Drive	None	*642
			At Hollyberry Drive	None	*662
			Approximately 600 feet upstream of Hollyberry Drive.	None	*674
		Moosa Creek (North Branch).	At unnamed road 1,600 feet downstream of Valley Vista Road.	None	*1,409
			At Valley Vista Road	None	*1,462
			At Cool Water Ranch Road	None	*1,518
			At Bates Nut Farm Road	None	*1,575
			At Indian Hill Ranch Road	None	*1,596
			At Lake Wohlford Road	None	*1,632
			Just upstream of Canal Road	None	*1,658
		Moosa Creek (South Branch).	At confluence with Moosa Creek	None	*1,599
			Approximately 990 feet downstream of Lake Wohlford Road.	None	*1,613
			Approximately 10 feet upstream of Lake Wohlford Road.	None	*1,628
		Gopher Canyon	Just downstream of Old River Road	None	*149
			Approximately 2,400 feet upstream of Old River Road.	None	*174
			Approximately 4,700 feet upstream of Old River Road.	None	*208
			At Gopher Canyon Road	None	*253
			Approximately 3,650 feet upstream of Gopher Canyon Road.	None	*320
			At Robbie Lane	None	*400
			At Twin Oaks Valley Road	None	*453
			Approximately 3,200 feet upstream of Twin Oaks Valley Road.	None	*521
		Escondido Creek	Approximately 660 feet downstream of North Lake Wohlford Road.	None	*1,492
			At Bear Valley Heights Road	None	*1,566
			Approximately 1,800 feet upstream of Bear Valley Heights Road.	None	*1,581
		Pala Mesa Creek	Just downstream of Old Route 395	None	*311
			At Canonita Drive	None	*384
			Approximately 140 feet upstream of Valley Oaks Boulevard East.	None	*442
		Slaughterhouse Creek	Approximately 1,240 feet downstream of Route 67.	None	*447
			Just downstream of Slaughterhouse Canyon Road.	None	*465
			Approximately 1,680 feet upstream of Slaughterhouse Canyon Road.	None	*490
			Approximately 4,080 feet upstream of Slaughterhouse Canyon Road.	None	*545
		Forester Creek	Approximately 110 feet downstream of Terra Lane.	None	*541
			Approximately 1,000 feet upstream of Greenfield Road.	None	*628
			At Flume Drive	None	*659
			Approximately 0.25 mile upstream of Forester Creek Road.	None	*740
			Approximately 3,110 feet upstream of Forester Creek Road.	None	*900
			Approximately 1 mile upstream of Forester Creek Road.	None	*1,060

State	City/town/county	Source of flooding	Location	#Depth in feet above ground. *Elevation in feet. (NGVD)	
				Existing	Modified
			Approximately 7,530 feet upstream of Forester Creek Road.	None	*1,178
			Approximately 2 miles upstream of Forester Road.	None	*1,280
		Tributary to Forester Creek (South Branch).	Approximately 1,150 feet downstream of Fourth Street.	None	*518
			Approximately 1,350 feet upstream of Fourth Street.	None	*542
			Approximately 2,950 feet upstream of Fourth Street.	None	*562
		Tributary to Forester Creek.	Approximately 2,250 feet downstream of Third Street.	None	*490
			Approximately 100 feet upstream of Third Street.	None	*506
			Approximately 30 feet downstream of Fourth Street.	None	*532
			Approximately 2,330 feet upstream of Fourth Street.	None	*562
		Santa Ysabel Creek	Approximately 8,370 feet downstream of Route 79.	None	*2,810
			Just upstream of Route 79	None	*2,930
			Approximately 2,930 feet upstream of Route 79.	None	*2,993
		Lawson Creek	Approximately 7,200 feet upstream of confluence with Sweetwater River.	None	*1,572
			At Sloane Canyon Road	None	*1,636
			Approximately 1,850 feet upstream of Sloane Canyon Road.	None	*1,662
			Approximately 3,630 feet upstream of Sloane Canyon Road.	None	*1,752
			Approximately 5,050 feet upstream of Sloane Canyon Road.	None	*1770
			Approximately 1,970 feet downstream of Rudnick Road.	None	*1,840
			Approximately 730 feet downstream of Rudnick Road.	None	*1,914
			Approximately 70 feet upstream of Rudnick Road.	None	*1,944
			Approximately 1,510 feet upstream of Rudnick Road.	None	*1,960
		Coleman Creek	Approximately 1,860 feet downstream of Highway 78.	None	*3,569
			Approximately 400 feet upstream of Highway 78.	None	*3,604
			Approximately 410 feet downstream of Calico Ranch Road.	None	*3,620
			Approximately 990 feet upstream of Calico Ranch Road.	None	*3,660
			Approximately 2,840 feet upstream of Calico Ranch Road.	None	*3,740
			Approximately 3,490 feet upstream of Calico Ranch Road.	None	*3,780
			Approximately 4,890 feet upstream of Calico Ranch Road.	None	*3,869
			Approximately 6,390 feet upstream of Calico Ranch Road.	None	*3,914
			Approximately 7,650 feet upstream of Calico Ranch Road.	None	*3,941
			Approximately 1.75 miles upstream of Calico Ranch Road.	None	*3,974
			Approximately 2 miles upstream of Calico Ranch Road.	None	*4,012
			Approximately 12,230 feet upstream of Calico Ranch Road.	None	*4,044
			Approximately 13,530 feet upstream of Calico Ranch Road.	None	*4,164
		Twin Oaks Valley Creek ...	Approximately 300 feet downstream of Olive Street.	*694	*694
			Approximately 400 feet upstream of Olive Street.	*700	*700

State	City/town/county	Source of flooding	Location	#Depth in feet above ground. *Elevation in feet. (NGVD)	
				Existing	Modified
			At Deer Springs Road	None	*723
			Approximately 100 feet downstream of Tres Encinas Road.	None	*770
			Approximately 2,420 feet upstream of Tres Encinas Road.	None	*809
		Deer Springs Creek	Approximately 75 feet downstream of Marilyn Lane.	None	*723
			Approximately 2,550 feet upstream of Marilyn Lane.	None	*749
			Approximately 3,965 feet upstream of Marilyn Lane.	None	*774
		Stevenson Creek	Approximately 900 feet downstream of Deer Springs Road.	None	*730
			At Vista Merriam Road	None	*766
			Approximately 200 feet upstream of Country Garden Lane.	None	*815
		Olive Creek	At confluence with Twin Oaks Valley Creek.	None	*699
			Approximately 1,800 feet upstream of confluence with Twin Oaks Valley Creek.	None	*715
			Approximately 50 feet downstream of Kiso Lane.	None	*724
			Approximately 610 feet upstream of Kiso Lane.	None	*738
		Buena Creek	Just downstream of the Atchison, Topeka & Santa Fe Railroad.	*443	*443
			Just downstream of the Atchison, Topeka & Santa Fe Railroad.	*444	*445
			Approximately 300 feet upstream of the Atchison, Topeka & Santa Fe Railroad.	*447	*447
		Reidy Creek	Approximately 20,650 feet from confluence with Escondido Creek.	*753	*756
		Johnson Canyon Creek	800 feet upstream of confluence with Otay River.	None	#1
			920 feet upstream of confluence with Otay River.	None	*229
			4,500 feet upstream of confluence with Otay River.	None	*307
			4,030 feet upstream of confluence with Otay River.	None	*511
		San Luis Rey River	2,100 feet downstream of Old Highway 395 (Escondido Expressway).	None	*235
			Just downstream of Shearer Road	None	*263

Maps are available for inspection at the San Diego Department of Public Works, Land Development Division, 5555 Overland Avenue, San Diego, California.

Send comments to The Honorable Pam Slater, Chairperson, San Diego County Board of Supervisors, 1600 Pacific Highway, San Diego, California 92101.

California	San Marcos (City) San Diego County.	Olive Creek	Approximately 600 feet upstream of confluence with Twin Oaks Valley Creek.	None	*699
			Approximately 815 feet upstream of confluence with Twin Oaks Valley Creek.	None	*704
			Approximately 1,415 feet upstream of confluence with Twin Oaks Valley Creek.	None	*711
		Twin Oaks Valley Creek	Approximately 900 feet downstream of Olive Street.	*690	*690
			Approximately 400 feet upstream of Olive Street.	*700	*700
			Approximately 200 feet upstream of Mulberry Drive.	None	*716
			At Deer Springs Road	None	*723

State	City/town/county	Source of flooding	Location	#Depth in feet above ground. *Elevation in feet. (NGVD)	
				Existing	Modified
Maps are available for inspection at Engineering Services, City of San Marcos, One Civic Center Drive, San Marcos, California.					
Send comments to The Honorable Lee Thibadeau, Mayor, City of San Marcos, One Civic Center Drive, San Marcos, California 92069–2949.					
California	Santee (City) San Diego County.	San Diego River	Approximately 1,800 feet downstream of Riverford Road.	*354	*354
			Approximately 1,200 feet downstream of Riverford Road.	*364	*361
Maps are available for inspection at City of Santee, City Hall, 10601 Magnolia Avenue, Santee, California.					
Send comments to The Honorable Jack Dale, Mayor, City of Santee, City Hall, 10601 Magnolia Avenue, Santee, California 92071.					
Nebraska	Dakota County (Unincorporated Areas).	Omaha Creek	At extraterritorial limit, south of Omaha Creek Ditch.	None	*1,093
			At extraterritorial limit, north of Omaha Creek Ditch.	*1,094	*1,094
Maps are available for inspection at 505 East 33rd, South Sioux City, Nebraska.					
Send comments to The Honorable Jack Bobier, Chairman, Dakota County Board of Commissioners, 505 East 33rd, South Sioux City, Nebraska 68776.					
Nebraska	Homer (Village) Dakota County.	Omaha Creek	At extraterritorial limits on riverside of right and left levees.	*1,094	*1,095
			At extraterritorial limits on landward side of right and left levees.	*1,094	*1,094
			Approximately 1,850 feet downstream of U.S. Highway 77.	*1,099	*1,097
			Just upstream of U.S. Highway 77	*1,103	*1,102
			Just upstream of John Street	*1,112	*1,111
			At confluence of Fiddlers Creek	*1,115	*1,116
			At confluence of Wiggle Creek	*1,117	*1,118
			At upstream extraterritorial limit	*1,121	*1,120
		Omaha Creek Old Channel.	At extraterritorial limits	*1,100	*1,096
			At the divergence with Omaha Creek	*1,105	*1,104
Maps are available for inspection at City Hall, 110 John Street, Homer, Nebraska.					
Send comments to The Honorable Bud Vassar, Mayor, Village of Homer, P.O. Box 386, Homer, Nebraska 68030.					
Oregon	La Grande (City) Union County.	Taylor Creek	At Gekeler Lane	*2,763	*2,763
			At Gemini Drive	*2,809	*2,801
			At Linda Lane	*2,819	*2,819
			Just downstream of Jupiter Way	*2,828	*2,828
			At Highland Drive	*2,880	*2,879
			At confluence with East-West Diversion Channel.	*2,934	*2,934
			Approximately 210 feet upstream of confluence with East-West Diversion Channel.	*2,969	*2,956
		Irrigation Ditch	Just upstream of confluence with Taylor Creek.	None	*2,763
			Approximately 1,000 feet upstream of confluence with Taylor Creek.	None	*2,780
			At divergence from Taylor Creek	None	*2,792
		Taylor Creek Overflow	Approximately 550 feet downstream of Scorpio Drive.	*2,786	*2,781
			At Scorpio Drive	*2,802	*2,800
			At Gemini Drive	*2,813	*2,808
		East-West Diversion Channel.	At confluence with Little Taylor Creek	*2,894	*2,894
			Approximately 400 feet upstream of confluence with Little Taylor Creek.	*2,915	*2,911
			At divergence from Taylor Creek	*2,934	*2,934
		Little Taylor Creek	At confluence with Taylor Creek	*2,802	*2,802
			Just upstream of Linda Lane	*2,818	*2,822
			At Jupiter Way	*2,827	*2,831
			Approximately 500 feet upstream of Jupiter Way.	*2,851	*2,846

State	City/town/county	Source of flooding	Location	#Depth in feet above ground. *Elevation in feet. (NGVD)	
				Existing	Modified
			Approximately 350 feet downstream of East-West Diversion Channel.	*2,870	*2,865
			At confluence with East-West Diversion Channel.	*2,894	*2,894
			Approximately 50 feet downstream of corporate limits.	*2,927	*2,927
Maps are available for inspection at the La Grande Planning Department, City Hall, 1000 Adams Avenue, La Grande, Oregon.					
Send comments The Honorable Colleen Johnson, Mayor, City of La Grande, P.O. Box 670, La Grande, Oregon 97850.					
Oregon	Union County (Unincorporated Areas).	Taylor Creek	At the downstream corporate limit (220 feet upstream of Gekeler Lane).	*2,776	*2,766
			Approximately 750 feet upstream of the downstream corporate limit.	*2,791	*2,790
			At the upstream corporate limit (approximately 4,120 feet upstream of Gekeler Lane).	None	*2,957
			Approximately 4,320 feet upstream of Gekeler Lane.	None	*2,790
			Approximately 4,770 feet upstream of Gekeler Lane.	None	*3,000
			Approximately 4,930 feet upstream of Gekeler Lane.	None	*3,030
			Approximately 5,165 feet upstream of Gekeler Lane.	None	*3,080
			Approximately 5,255 feet upstream of Gekeler Lane.	None	*3,100
			Approximately 5,380 feet upstream of Gekeler Lane.	None	*3,120
			Approximately 5,440 feet upstream of Gekeler Lane.	None	*3,126
Maps are available for inspection at the Union County Planning Department, 1108 K Avenue, La Grande, Oregon.					
Send comments to The Honorable Steve McClure, Chairman, Union County Board of Commissioners, 1106 K Avenue, La Grande, Oregon 97850.					
Washington	King County (Unincorporated Areas).	Raging River	At confluence with the Snoqualmie River .	*96	*96
			Just upstream of Carmichael Road	None	*204
			Just upstream of 68th Street	None	*259
			Just upstream of South 86th Street	None	*394
			At Interstate Highway 90	*426	*426
			Approximately 1,800 feet upstream of Interstate Highway 90.	*452	*450
			Approximately 3,050 feet upstream of Interstate Highway 90.	*464	*470
			At confluence with Lake Creek	*541	*542
			At confluence with Deep Creek	*633	*634
			Approximately 0.3 mile upstream of the second Upper Preston Road Bridge.	*673	*673
Maps are available for inspection at the Building and Land Development Division, 3600 136th Place, Bellevue, Washington.					
Send comments to The Honorable Gary Locke, King County Executive, 400 King County Courthouse, 516 Third Avenue, Seattle, Washington 98104.					

(Catalog of Federal Domestic Assistance No. 83.100, ''Flood Insurance.'')

Dated: August 22, 1995.

Richard T. Moore,

Associate Director for Mitigation.

[FR Doc. 95–21398 Filed 8–28–95; 8:45 am]

BILLING CODE 6718–03–M

FEDERAL COMMUNICATIONS COMMISSION

47 CFR Part 73

[MM Docket No. 95–44; RM–8602]

Radio Broadcasting Services; Fair Bluff, NC

AGENCY: Federal Communications Commission.

ACTION: Proposed rule; denial.

SUMMARY: The Commission denies the request of Atlantic Broadcasting Co., Inc., to delete Channel 287A from Fair Bluff, North Carolina, since interests in its use were expressed. The Commission also denied the request to change the channels's existing transmitter site restriction. *See* 60 FR 19561, April 19,

1995. With this action, this proceeding is terminated.

FOR FURTHER INFORMATION CONTACT: Leslie K. Shapiro, Mass Media Bureau, (202) 418–2180.

SUPPLEMENTARY INFORMATION: This is a synopsis of the Commission's *Report and Order,* MM Docket No. 95–44, adopted August 11, 1995, and released August 21, 1995. The full text of this Commission decision is available for inspection and copying during normal business hours in the FCC Reference Center (Room 239), 1919 M Street, NW., Washington, DC. The complete text of this decision may also be purchased from the Commission's copy contractor, International Transcription Service, Inc., (202) 857–3800, 2100 M Street, NW., Suite 140, Washington, DC 20037.

List of Subjects in 47 CFR Part 73

Radio broadcasting.

Federal Communications Commission.

Douglas W. Webbink,

Chief, Policy and Rules Division, Mass Media Bureau.

[FR Doc. 95–21006 Filed 8–28–95; 8:45 am]

BILLING CODE 6712–01–F

DEPARTMENT OF TRANSPORTATION

Research and Special Programs Administration

49 CFR Parts 192 and 195

[Docket No. PS–141, Notice 1]

RIN 2137–AC38

Increased Inspection Requirements

AGENCY: Research and Special Programs Administration (RSPA), DOT.

ACTION: Public workshop notice.

SUMMARY: This notice announces a public workshop to discuss issues relevant to development of regulations requiring increased inspection of certain gas and hazardous liquid pipelines. The increased inspection would apply to all gas transmission and hazardous liquid pipelines under RSPA safety regulations in high-density population areas. In addition, hazardous liquid pipelines would have to be inspected in unusually sensitive environmental areas and at crossings of navigable waterways. Congress mandated the increased inspection regulations to reduce the risk of pipeline accidents due to structural defects.

DATES: The workshop will be on October 18, 1995, from 8:30 am to 4:00 pm. Persons who want to participate in the workshop should call (703) 218–1449 or e-mail their name, affiliation and phone number to RSPA@walcoff.com before close of business October 2, 1995. The workshop is open to all interested persons, but RSPA may limit participation because of space considerations and the need to obtain a spectrum of views. Callers will be notified if participation is not open.

Persons who are unable to attend may submit written comments in duplicate by November 27, 1995. Interested persons should submit as part of their written comments all material that is relevant to a statement of fact or argument. Late filed comments will be considered so far as practicable.

ADDRESSES: The workshop will be held at the U.S. Department of Transportation, Nassif Building, 400 Seventh Street, SW, Room 9230–34, Washington, DC. Non-federal employee visitors are admitted into the DOT headquarters building through the southwest entrance at Seventh and E Streets, SW.

Send written comments in duplicate to the Dockets Unit, Room 8421, Research and Special Programs Administration, U.S. Department of Transportation, 400 Seventh Street, SW, Washington, DC 20590–0001. Identify the docket and notice numbers stated in the heading of this notice.

All comments and docketed material will be available for inspection and copying in Room 8421 between 8:30 am and 4:30 pm each business day. A summary of the workshop will be available from the Dockets Unit about three weeks after the workshop.

FOR FURTHER INFORMATION CONTACT: L.M. Furrow, (202) 366–4559, about this document or the Dockets Unit, (202) 366–5046, for copies of this document or other material in the docket.

SUPPLEMENTARY INFORMATION:

I. Background

Pipelines can have various types of defects that threaten their structural integrity. These defects can originate during the manufacture of pipe (e.g., seam weld defects) or during construction of the pipeline (e.g., scratches, gouges, dents, and girth weld flaws). Later, during operation of the pipeline, more defects can occur that threaten pipeline integrity. These defects commonly include metal loss due to corrosion, environmental or fatigue cracking, and scratches, gouges, or dents caused by outside forces, usually excavation equipment.

Defects that are not detected and removed can deteriorate or grow, causing pipeline accidents. For example, RSPA data show that in 1992, 17 percent of the accidents on gas transmission and gathering systems were due to corrosion, 40 percent were due to outside force damage, and 9 percent were due to material or construction defects. Similarly, on hazardous liquid pipelines, corrosion caused 20 percent of the accidents; outside forces, 22 percent; and material or construction defects, 17 percent.

These data do not distinguish outside force accidents that occurred immediately on impact from accidents that occurred after impact because of a defect created by the impact. However, several major pipeline accidents have been attributed to undetected structural defects caused by an outside force. For example, on March 28, 1993, a 36-inch hazardous liquid pipeline failed near Reston, Virginia, spilling over 400,000 gallons of diesel fuel into Sugarland Run Creek, an ecologically-sensitive tributary of the Potomac River. An investigation showed that outside force damage had probably occurred.

The 102d Congress was concerned about the risk of pipeline failures caused by undetected structural defects. So, it directed DOT to issue regulations that require the periodic inspection of certain pipeline facilities (49 U.S.C. § 60102(f)(2)). Under this congressional mandate, gas and hazardous liquid pipelines (except gas distribution lines) must be inspected in high-density population areas. In addition, hazardous liquid pipelines must be inspected in areas that are unusually sensitive to environmental damage in the event of a pipeline accident, and at crossings of navigable waterways. The regulations are to prescribe any circumstances in which inspections must be conducted with an instrumented internal inspection device. Where the device is not required, the regulations are to require the use of an inspection method that is at least as effective as using the device in providing for the safety of the pipeline.

II. Workshop

Consistent with the President's regulatory policy (E.O. 12866), RSPA wants to accomplish this congressional mandate at the least cost to society. Toward this end, RSPA is seeking early public participation in the rulemaking process by holding a public workshop at which participants, including RSPA staff, may exchange views on relevant issues. RSPA hopes the workshop will enable government and industry to reach a better understanding of the problem and the potential solutions before proposed rules are issued.

Workshop participants are encouraged to focus their remarks on

the following issues, but may address other issues as time permits and in supplementary written comments:

A. Apart from internal inspection, are current DOT safety regulations that require periodic inspection of pipelines for corrosion and leaks sufficient under the mandate?

B. What are the circumstances in which the regulations should require operators to use instrumented internal inspection devices?

C. What defects should the regulations require the use of instrumented internal inspection devices to detect?

D. What other inspection methods are as effective as using an instrumented internal inspection device?

E. How should the regulations define areas of high-density population, areas unusually sensitive to environmental damage in the event of a pipeline accident, and navigable waterways.

F. What are the per mile costs of inspection with instrumented internal inspection devices and the factors that determine those costs?

(49 U.S.C. Chapter 601)

Issued in Washington, DC on August 24, 1995.

Richard B. Felder,

Associate Administrator for Pipeline Safety.

[FR Doc. 95–21425 Filed 8–28–95; 8:45 am]

BILLING CODE 4910–60–P

---

49 CFR Part 195

[Docket No. PS–133, Notice 2]

RIN 2137–AC39

Emergency Flow Restricting Devices/ Leak Detection Equipment on Hazardous Liquid Pipelines

AGENCY: Research and Special Programs Administration (RSPA), DOT.

ACTION: Public workshop notice.

SUMMARY: This notice announces a public workshop to discuss issues relevant to development of regulations on the circumstances under which operators of hazardous liquid pipelines must use emergency flow restricting devices (including remotely controlled valves and check valves). In addition, the public workshop will discuss issues relevant to development of regulations on the circumstances under which operators of hazardous liquid pipelines identify ruptures on their pipelines. Congress mandated regulations on these items in order to limit hazardous liquid releases subsequent to a failure by more quickly identifying the releases and isolating the failed segment of pipe involved.

DATES: The workshop will be held on October 19, 1995, from 8:30 am to 4:00 pm. Persons who want to participate in the workshop should call (703) 218–1449 or e-mail their name, affiliation, and telephone number to RSPA@walcoff.com before close of business October 2, 1995. The workshop is open to all interested persons, but RSPA may limit participation because of space considerations and the need to obtain a spectrum of views. Callers will be notified if participation is not open.

Persons who are unable to attend may submit written comments in duplicate by November 27, 1995. Interested persons should submit as part of their written comments all material that is relevant to a statement of fact or argument. Late filed comments will be considered so far as practicable.

ADDRESSES: The workshop will be held at the U.S. Department of Transportation, Nassif Building, 400 Seventh Street, SW., room 9230–34, Washington, DC. Non-federal employee visitors are admitted into the DOT headquarters building through the southwest entrance at Seventh and E Streets, SW.

Send written comments in duplicate to the Dockets Unit, room 8421, Research and Special Programs Administration, U.S. Department of Transportation, 400 Seventh Street, SW., Washington, DC 20590–0001. Identify the docket and notice numbers stated in the heading of this notice.

All comments and docketed material will be available for inspection and copying in Room 8421 between 8:30 am and 4:30 pm each business day. A summary of the workshop will be available from the Dockets Unit about three weeks after the workshop.

FOR FURTHER INFORMATION CONTACT: Lloyd Ulrich, (202) 366–4556, about this document or the Dockets Unit, (202) 366–5046, for copies of this document or other material in the docket.

SUPPLEMENTARY INFORMATION:

I. Background

RSPA has been concerned for some time with operators' optimum placement of emergency flow restricting devices (EFRD), and more rapid detection of leaks on hazardous liquid pipelines to limit commodity release.

The Department's March 1991 study titled ''Emergency Flow Restricting Devices Study'' (1991 EFRD Study) contained recommendations that RSPA seek public input on the placement of EFRDs in urban areas, at water crossings, at other critical areas affected by commodity release, and areas in close proximity to the public outside of urban areas. The 1991 EFRD Study concluded remote control and check valves are the only effective EFRDs. A copy of the 1991 EFRD Study is filed in Docket No. PS–133.

In May 1992, RSPA commenced a research study with the Volpe National Transportation Systems Center (VNTSC) to analyze SCADA systems [1] and computer-generated leak detection equipment. RSPA anticipates a report on SCADA and leak detection equipment based on interviews with a number of pipeline operators and equipment vendors will be completed well in advance of the workshop. Once the report is completed, a copy will be placed in Docket No. PS–133.

Congress, in 49 U.S.C. 60102(j), mandated the Secretary of Transportation, by October 24, 1994, conduct a survey and assess the effectiveness of EFRDs and other procedures, systems, and equipment used to detect and locate hazardous liquid pipeline ruptures and minimize product releases from hazardous liquid pipeline facilities. The mandate also required that the Secretary issue regulations within two years of completion of the survey and assessment (no later than October 24, 1996). These regulations would prescribe the circumstances under which operators of hazardous liquid pipelines would use EFRDs and other procedures, systems, and equipment to detect and locate pipeline ruptures and minimize product release from pipeline facilities. The Secretary delegated this authority to RSPA.

RSPA issued an advance notice of proposed rulemaking (ANPRM) (59 FR 2802, Jan. 19, 1994) to solicit data from the public through a series of questions mostly directed to the operators of hazardous liquid pipelines primarily concerning the performance of leak detection equipment and location of EFRDs, including the costs involved, as the means of conducting the survey mandated in 49 U.S.C. 60102.

Nineteen comments were submitted in response to the ANPRM. Sixteen comments were from hazardous liquid operators, two were from leak detection vendors, and one from a trade association, American Petroleum Institute (API). Commenters were generally against requiring leak

---

[1] SCADA is an acronym for Supervisory Control and Data Acquisition. SCADA systems utilize computer technology to analyze data (e.g., pressure, temperature, and delivery flow rates) that are continuously gathered from remote locations on the pipeline. Computer analysis of this data is used to assist in day-to-day operating decisions on the pipeline and to provide input for real-time models of the pipeline operation which can identify and locate leaks.

detection equipment and EFRDs. Only ten of the 16 hazardous liquid operators responded with usable data.

Meanwhile, the liquid pipeline industry, through an API formed task force, is producing a document (API Publication 1130) to assist pipeline operators in the selection, implementation, testing, and operation of leak detection systems. API's goal is to publish API Publication 1130 by the end of 1995.

II. Workshop

Consistent with the President's regulatory policy (E.O. 12866), RSPA wants to accomplish this Congressional mandate to provide for public safety and environmental protection at the least cost to society. Toward this end, and because RSPA received limited data in response to the questionnaire in the ANPRM, RSPA is holding a public workshop at which participants, including RSPA staff, may exchange views on relevant issues. RSPA hopes the workshop will enable government and industry to reach a better understanding of the problem and the potential solutions before proposed rules are issued.

Workshop participants are encouraged to focus their remarks on the following issues and questions, but may address other issues as time permits and in supplementary written comments. Participants are urged to present supporting data for views expressed at the workshop or in written submissions:

A. Placement of EFRDs

Congress, in 49 U.S.C. 60102, mandates RSPA to prescribe the circumstances under which hazardous liquid operators would use EFRDs. RSPA needs to identify these circumstances. Activated EFRDs can reduce release from a rupture after the rupture has been detected and located. Comments to the ANPRM endorsed the selective use of remotely controlled valves in high-risk areas after an analysis is made of the operator's particular pipeline system. The determination of what constitutes a ''high-risk area'' needs to be explored at this workshop.

The question of valve spacing of EFRDs on new pipelines and the costs involved should be addressed. Should EFRD spacing on new pipelines be risk-based? If so, what risks should be included? If proximity to high-density population is one of the risks, what is a precise definition for ''proximity'' and ''high density?''

The question of valve spacing of EFRDs on existing pipelines and the costs involved should be addressed. The existing regulations require valves at water crossings (49 CFR § 195.260). Retrofitting all water crossing valves to be remotely controlled cannot be quantified because the number of these crossings is unknown. However, there may be a subset of these water crossings at a higher risk because of high volumes of waterborne traffic which should be remotely controlled. Identification of classes of higher risk locations, if any, and the economic implications of alternatives, or reasons why there should not be higher risk locations should be addressed at the workshop.

Circumstances for requiring non-water crossing existing valves to be retrofitted to be remotely controlled needs to be explored. Should circumstances such as response time to an existing valve location, pipeline profile and draindown characteristics, proximity to population and high risk environmental areas, hazards of commodity transported, and resource requirements to respond to a release be considered? What are specific values for each circumstance cited above which should be included? What are the economic impacts of alternatives?

Following are general questions concerning EFRDs which should be addressed by workshop participants:

(1) What conditions or situations prompt a pipeline company to install remote controlled valves?

(2) What are the operational and economic problems with remotely controlled valves?

(3) What are the operational and economic benefits of remotely controlled valves?

(4) Does the presence of remotely controlled valves actually result in a more rapid response to a leak?

B. Leak Detection Sensitivity

Congress, in 49 U.S.C. 60102, expressly stated the magnitude of release to be detected as a ''rupture.'' Participants at this workshop should be prepared to comment on a precise definition of ''rupture'' since leak detection equipment must be sensitive enough to detect this size of release. Comments to the ANPRM indicated that it is not technically feasible for a leak detection system to detect ''all'' releases. The VNTSC study indicated that there are enormous differences both in reliability and sensitivity of SCADA and leak detection equipment.

Operators, responding to a request for information (54 FR 20945, May 15, 1989) to provide input to the 1991 EFRD Study, reported the range of sensitivity of their leak detection equipment as between 0.5 and 5 percent of flow over a one to two hour period, with sensitivity depending on the sophistication of the SCADA system used as the primary leak detection system. Should a definition for ''rupture'' be based on a percentage of release over a specific time interval? If yes, what should the percentage and time interval be? Should it be a tiered requirement (as the release increases, the detection time decreases)? If not, why not and upon what criteria should a definition of ''rupture'' be based?

C. Requirements for a Leak Detection System

Congress mandated RSPA to prescribe the circumstances under which hazardous liquid operators would use EFRDs and other procedures, systems, and equipment to detect and locate pipeline ruptures. This workshop also will address the ''other'' procedures, systems, and equipment in addition to EFRDs.

Following are general questions concerning leak detection systems which should be addressed by workshop participants:

(1) What should these procedures, systems, and equipment include, under what circumstances should they be used, and what are their cost including installation?

(2) What conditions or situations prompt a pipeline company to install leak detection systems?

(3) What are the operational and economic problems with leak detection systems?

(4) What are the operational and economic benefits of leak detection systems?

(5) Does the presence of a leak detection system actually result in a more rapid response to a leak?

(6) What requirements should be proposed for locating releases after they've been detected?

D. Scope

RSPA would like opinions from participants at the workshop on whether the use of EFRDs should be limited to the ''cross-country'' portion of operators' pipelines, or should also apply to pump stations and breakout tanks.

(49 U.S.C. Chapter 601)

Issued in Washington, DC on August 24, 1995.

Richard B. Felder,

Associate Administrator for Pipeline Safety.

[FR Doc. 95–21424 Filed 8–28–95; 8:45 am]

BILLING CODE 4910–60–P

49 CFR Part 195

[Docket PS–140, Notice 3]

RIN 2137–AC34

Areas Unusually Sensitive to Environmental Damage

AGENCY: Research and Special Programs Administration (RSPA), DOT.

ACTION: Public workshop notice.

SUMMARY: RSPA invites industry, State and local government representatives, and the public to a second workshop on unusually sensitive environmental areas. The workshop's purpose is to openly discuss the process for determining areas unusually sensitive to environmental damage from a hazardous liquid pipeline release. This workshop is a continuation of the June 15–16, 1995 workshop on unusually sensitive environmental areas.

DATES: The workshop will be held on October 17, 1995 from 8:30 a.m. to 4:00 p.m. Persons who want to participate in the workshop should call (703) 218–1449 or e-mail their name, affiliation, and phone number to RSPA@walcoff.com before close of business October 2, 1995. The workshop is open to all interested persons, but RSPA may limit participation because of space considerations and the need to obtain a spectrum of views. Callers will be notified if participation is not open.

Persons who are unable to attend may submit written comments in duplicate by November 27, 1995. Interested persons should submit as part of their written comments all material that is relevant to a statement of fact or argument. Late filed comments will be considered so far as practicable.

ADDRESSES: The workshop will be held at the U.S. Department of Transportation, Nassif Building, 400 Seventh Street, SW., room 9230–34, Washington, DC. Non-federal employee visitors are admitted into the DOT headquarters building through the southwest entrance at Seventh and E Streets, SW.

Send written comments in duplicate to the Dockets Unit, Room 8421, Research and Special Programs Administration, U.S. Department of Transportation, 400 Seventh Street, SW., Washington, DC 20590–0001. Identify the docket and notice numbers stated in the heading of this notice.

All comments and docketed materials will be available for inspection and copying in room 8421 between 8:30 a.m. and 4:30 p.m. each business day. A summary of the workshop will be available from the Dockets Unit about three weeks after the workshop.

FOR FURTHER INFORMATION CONTACT: Christina Sames, (202) 366–4561, about this document, or the Dockets Unit, (202) 366–5046, for copies of this document or other material in the docket.

SUPPLEMENTARY INFORMATION: 49 U.S.C. § 60109 requires the Secretary of Transportation to:

- consult with the Environmental Protection Agency and describe areas that are unusually sensitive to environmental damage if there is a hazardous liquid pipeline accident, and
- establish criteria for identifying each hazardous liquid pipeline facility and gathering line, whether otherwise subject to regulation, located in an area unusually sensitive to environmental damage in the event of a pipeline accident.

Consistent with the President's regulatory policy (E.O. 12866), RSPA wants to accomplish this congressional mandate at the least cost to society. Toward this end, RSPA is seeking early public participation in the rulemaking process by holding public workshops at which participants, including RSPA staff, may exchange views on relevant issues. RSPA hopes these workshops will enable government and industry to reach a better understanding of the problem and the potential solutions before proposed rules are issued. (49 U.S.C. Chapter 601)

On June 15 and 16, 1995, RSPA held a public workshop to openly discuss the criteria being considered to determine areas unusually sensitive to environmental damage from a hazardous liquid pipeline release (60 FR 27948, May 26, 1995). Participants included representatives from the hazardous liquid pipeline industry; the Departments of Interior, Agriculture, Transportation, and Commerce; the Environmental Protection Agency; non-government agencies; and the public. Participants at the workshop requested that additional workshops be held to further discuss this complex topic.

On October 17, 1995, RSPA will hold a second workshop on areas unusually sensitive to environmental damage from a hazardous liquid pipeline release. The second workshop will focus on developing a process that can be used to determine if an area is unusually sensitive to environmental damage and if an operator has pipeline facilities located within that area.

Persons interested in receiving a transcript of the first workshop, material presented at the first workshop, or comments submitted on the material presented in the first public workshop notice (60 FR 27948, May 26, 1995) should contact the Dockets Unit at (202) 366–5046 and reference docket PS–140.

(49 U.S.C. Chapter 601)

Issued in Washington, DC on August 24, 1995.

Richard B. Felder,

Associate Administrator for Pipeline Safety.

[FR Doc. 95–21426 Filed 8–28–95; 8:45 am]

BILLING CODE 4910–60–P

DEPARTMENT OF COMMERCE

National Oceanic and Atmospheric Administration

50 CFR Parts 630 and 678

[I.D. 062695D]

RIN 0648–A110

Options for Establishing an Interim Permit Moratorium and Eligibility Criteria for the Atlantic Swordfish and Shark Fisheries; Comment Period Extension

AGENCY: National Marine Fisheries Service (NMFS), National Oceanic and Atmospheric Administration (NOAA), Commerce.

ACTION: Advance notice of proposed rulemaking (ANPR); extension of comment period.

SUMMARY: On July 28, 1995, NMFS published an ANPR to request comments on a temporary moratorium on the issuance of permits for the Atlantic swordfish and shark fisheries. NMFS announced the availability of a concept paper entitled ''Towards Rationalization of Fisheries for Highly Migratory Species'' and two supplemental papers outlining options for a permit moratorium in the Atlantic swordfish and Atlantic shark fisheries, respectively. NMFS announces that it is extending the comment period for the ANPR from August 28 to September 15, 1995.

DATES: Written comments on this ANPR must be received on or before September 15, 1995.

ADDRESSES: Written comments should be sent to Richard B. Stone, Chief, Highly Migratory Species Management Division (F/CM4), Office of Fisheries Conservation and Management, National Marine Fisheries Service, 1315 East/West Highway, Silver Spring, MD 20910.

FOR FURTHER INFORMATION CONTACT: Pamela Mace, 301-713-2347.

SUPPLEMENTARY INFORMATION: On July 28, 1995 (60 FR 38785) NMFS published an ANPR and notice of availability of a concept paper and two supplemental

papers. As a result of requests from the public, NMFS has determined that it is important for commenters to have additional time to submit their comments on this ANPR. Therefore, NMFS is extending the comment period on the ANPR from August 28 to September 15, 1995.

Authority: 16 U.S.C. 1801 *et seq.* and 16 U.S.C. 971 *et seq.*

Dated: August 23, 1995.

Richard H. Schaefer,

Director, Office of Fisheries Conservation and Management, National Marine Fisheries Service.

[FR Doc. 95–21402 Filed 8–28–95; 8:45 am]

BILLING CODE 3510–22–F

---

50 CFR Part 641

[Docket No. 950810206–5206–01; I.D. 071395A]

RIN 0648-AG29

Reef Fish Fishery of the Gulf of Mexico; Amendment 8

AGENCY: National Marine Fisheries Service (NMFS), National Oceanic and Atmospheric Administration (NOAA), Commerce.

ACTION: Proposed rule; request for comments.

SUMMARY: NMFS issues this proposed rule that would implement certain provisions of Amendment 8 to the Fishery Management Plan for the Reef Fish Fishery of the Gulf of Mexico (FMP). Amendment 8 proposes a limited entry program for the commercial red snapper sector of the reef fish fishery in the Gulf of Mexico. Initial participants in the limited entry program would receive shares of the commercial quota of red snapper based on specified criteria. The percentage shares of the commercial quota would equate to individual transferable quotas (ITQs). NMFS, based on a preliminary evaluation of Amendment 8, has disapproved three of the measures in the amendment because they are inconsistent with the Magnuson Fishery Conservation and Management Act (Magnuson Act) and other applicable laws. The proposed rule would implement the remaining measures in Amendment 8. In addition, NMFS proposes a minor clarification to the existing regulations regarding commercial permit requirements. The intended effect of this rule is to manage the commercial red snapper sector of the reef fish fishery in order to preserve its long-term economic viability.

DATES: Written comments must be received on or before October 10, 1995.

ADDRESSES: Comments on the proposed rule must be sent to Robert Sadler, Southeast Region, NMFS, 9721 Executive Center Drive N., St. Petersburg, FL 33702.

Requests for copies of Amendment 8, which includes an environmental assessment, a regulatory impact review (RIR), and an initial regulatory flexibility analysis (IRFA), and for copies of a minority report submitted by three members of the Council, should be sent to the Gulf of Mexico Fishery Management Council, 5401 W. Kennedy Boulevard, Suite 331, Tampa, FL 33609.

Comments regarding the collection-of-information requirements contained in this proposed rule should be sent to Edward E. Burgess, Southeast Regional Office, NMFS, 9721 Executive Center Drive N., St. Petersburg, FL 33702, and to the Office of Information and Regulatory Affairs, Office of Management and Budget (OMB), Washington, DC 20503 (Attention: NOAA Desk Officer).

FOR FURTHER INFORMATION CONTACT: Robert Sadler, 813-570-5305.

SUPPLEMENTARY INFORMATION: The reef fish fishery of the Gulf of Mexico is managed under the FMP. The FMP was prepared by the Gulf of Mexico Fishery Management Council (Council) and is implemented through regulations at 50 CFR part 641 under the authority of the Magnuson Act.

Background and Rationale

The ITQ system proposed in this rule addresses the excessive effort capacity for the commercial red snapper fishery, given current quota levels and effort. This excessive capacity is evidenced by the increasingly short time in which the commercial sector reaches its quota, with a closure of the fishery for the rest of the fishing year.

Beginning in 1993, NMFS implemented a red snapper endorsement system whereby owners or operators of permitted vessels that had historical catches of at least 5,000 lb (2,268 kg) in 2 of the 3 years 1990, 1991, and 1992 were authorized to harvest red snapper under trip limits of 2,000 lb (907 kg), and all other permitted vessels were authorized to harvest under trip limits of 200 lb (91 kg). Nevertheless, the commercial red snapper fishermen continued to reach the commercial quota in increasingly shorter times.

NMFS implemented the existing red snapper endorsement regulations under Amendment 6 to the FMP and extended them under Amendment 9 as an interim measure, pending development of a long-term, comprehensive management system. The endorsement provisions expire on December 31, 1995, and red snapper management will revert to an open access system unless a long-term effort control system is implemented through Amendment 8.

In anticipation of either a license limitation system or ITQs, the Council proposed, and NMFS implemented, provisions in Amendment 9 whereby data were collected on the vessel landings of red snapper during the period 1990 through 1992 and on the status of certain individuals as ''historical captains.'' These data identify each red snapper landing during the period. Each landing is associated with an owner. Where appropriate, a landing is also associated with an operator whose earned income qualified him or her for the vessel permit at the time of the landing. Finally, where appropriate, a landing is associated with an historical captain. As defined in the final rule to implement Amendment 9 (59 FR 39301, August 2, 1994), historical captain means an operator who: (1) From November 6, 1989 through 1993, fished solely under verbal or written share agreements with an owner, and such agreements provided for the operator to be responsible for hiring the crew, who were paid from the share under his or her control; (2) landed from that vessel at least 5,000 lb (2,268 kg) of red snapper per year in 2 of the 3 years 1990, 1991, and 1992; (3) derived more than 50 percent of his or her earned income from commercial fishing, that is, sale of the catch, in each of the years 1989 through 1993; and (4) landed red snapper prior to November 7, 1989.

The Council explored various alternative management options to preserve and enhance the economic and socioeconomic viability of the fishery in the face of continued incentives for entry and competition. After extensive deliberation and consideration of public comment, the Council selected an ITQ system for management of the red snapper fishery as the most effective means of achieving optimum yield (OY) and addressing the concerns described above.

Duration of ITQ System

Under Amendment 8, the proposed ITQ system would remain in effect for 4 years from the date that the system is implemented, during which time NMFS and the Council would evaluate the system. Based on the evaluation, NMFS and the Council would modify, extend, or terminate the system. The Council selected the 4-year period after consideration of alternative time periods. The Council, before its vote for the proposed 4-year duration, was aware

of the potential for reduced economic benefits with a 4-year time period, as compared to a system of indefinite duration. However, public testimony to the Council supported the 4-year period to allow termination of the system if it does not produce the expected benefits, and to keep windfall profit and speculation to a minimum.

Amendment 8 includes an option for a time limit, and alternative time periods were discussed at public hearings. To provide additional public review, NMFS specifically requests comments on the proposed 4-year duration of the ITQ system.

Initial Eligibility

An initial shareholder under the ITQ system would be either the owner or operator of a vessel with a valid permit on August 29, 1995, provided such owner or operator had the required landing of red snapper during the period 1990 through 1992. If the earned income of an operator was used to qualify for the permit valid on August 29, 1995, such operator would be the initial shareholder rather than the owner. The term ''owner'' includes a corporation or other legal entity. Additionally, a historical captain could be an initial ITQ shareholder. The Council believes that these criteria for initial ITQ shareholder status encompass both current participation and historical dependence on the fishery and would be consistent with previous measures for red snapper endorsements.

Initial ITQ Shares

Initial shares would be apportioned based on each shareholder's average of the top 2 years' landings in 1990, 1991, and 1992. However, no initial shareholder would receive an initial percentage share that would equate to less than 100 lb (45.36 kg), whole weight, of red snapper. If the commercial quota remains at the present level of 3.06 million lb (1.39 million kg), each such minimum share would be 0.0033 percent. This minimum share amount would provide a bycatch allowance for those initial shareholders who had minimal historical landings of red snapper during the period 1990 through 1992.

After the minimum shares have been calculated, the remaining percentage shares would be apportioned based on each remaining shareholder's average of the top 2 years' landings in 1990, 1991, and 1992. Landings associated with a historical captain would be apportioned between the owner and historical captain in accordance with the share agreement in effect between the owner and historical captain at the time of the landings.

Landings Records

Determinations of landings during the period 1990 through 1992 and historical captain status would be based on the data collected under Amendment 9. However, a red snapper landings record associated solely with an owner during these years may be transferred under the following circumstances. An owner of a vessel with a valid reef fish permit on August 29, 1995, who transferred a vessel permit to another vessel owned by him or her, would retain the red snapper landings record for the previous vessel. Thus, an owner who replaced a vessel that sank or was otherwise removed from the fishery would retain credit for his or her landings.

An owner of a vessel with a valid reef fish permit on August 29, 1995 also would retain the landings record of a permitted vessel if the vessel had a change of ownership without a substantive change in control of the vessel. It would be presumed that there was no substantive change in control of a vessel if a successor in interest received at least a 50 percent interest in the vessel as a result of the change of ownership, whether the change of ownership was: (1) From a closely held corporation to its majority shareholder; (2) from an individual who became the majority shareholder of a closely held corporation receiving the vessel; (3) between closely held corporations with a common majority shareholder; or (4) from one to another of the following: Husband, wife, son, daughter, brother, sister, mother, or father. This provision would recognize, for example, a change of ownership between closely held corporations or from individual to corporate, or vice versa, all with the same person retaining actual control of the vessel.

In another case of permit transfers through change of vessel ownership, an owner of a vessel with a valid reef fish permit on August 29, 1995 would receive credit for the landings record of the vessel before his or her ownership only if there were a legally binding agreement for transfer of the landings record. This provision would account for all other changes of ownership where there is no logical basis for transfer of a landings record but where there may have been an agreement for such transfer between the seller and buyer.

An owner of a permitted vessel who potentially is eligible to be credited with transferred landings records under the criteria described above would be given an opportunity to request transfer of specific landings records. Documentation supporting the request may be required by the Director, Southeast Region, NMFS (Regional Director). After considering requests for transfers of landings records, the Regional Director would advise each initial shareholder or applicant of his or her tentative allocation of shares.

Appeals

The Council will convene a special advisory panel to function as an appeals board, which would consider written requests from persons who contest their tentative allocations of shares or determinations of historical captain status. In addition to considering written requests, the board could allow personal appearances by such persons before the board or a subboard.

The board would be empowered to consider disputed calculations or determinations, based on documentation submitted under Amendment 9 to the FMP, regarding landings of red snapper during the period 1990 through 1992, or transfers of such landings records, or regarding historical captain status. Applicants would be required to submit their appeals in writing to the Regional Director within a time frame specified by the Regional Director and would be required to include documentation that supports allegations of improper calculations or determinations, or other such matters that form the bases for the appeals.

The advisory board would meet as necessary to consider each timely request. Members of the board would provide their individual recommendations in each case to the Council, which would forward its recommendation to the Regional Director. The board and the Council will recommend whether the eligibility criteria, specified in Amendment 8 of the FMP and paragraphs (c)(1) and (c)(2) of 50 CFR § 641.10, were correctly applied in each case, based solely on the available record, including documentation submitted by the applicant. The Council will also base its recommendation on the recommendations of the board members. The Regional Director will decide the appeal based on above criteria and the available record, including documentation submitted by the applicant and the recommendation of the Council. The Regional Director will notify the appellant of his decision and the reason therefor, in writing, normally within 45 days of receiving the Council's recommendation. The Regional Director's decision would

constitute the final administrative action by NMFS on an appeal.

Hardships

Amendment 8 proposes that (1) the appeals board consider hardship cases and (2) NMFS should set aside up to 3 percent of the initial commercial allocation for resolving hardship cases. NMFS has determined that the hardship appeals criterion in Amendment 8 is too vague and subjective to identify circumstances constituting hardships. This subjectivity, in turn, would invite arbitrary decision-making. In addition, Amendment 8 contains no criteria for allocating the 3 percent set-aside for hardship cases. Moreover, a set-aside is unnecessary, if the board is precluded from considering hardship cases.

Accordingly, the Regional Director has disapproved these provisions, based on his determination that they are inconsistent with the Magnuson Act and Administrative Procedure Act. Accordingly, the hardships appeals section and 3 percent set-aside are not included in this proposed rule. The Regional Director's disapproval of these provisions means the appeals board would not be empowered to consider an application from a person who believes he or she should be eligible because of hardship or other factors.

Issue and Transfer of Shares

Upon completion of the appeal process, the Regional Director would issue share certificates to initial shareholders. If additional shares become available to NMFS, e.g., through forfeiture pursuant to a rule violation, such shares would be reissued proportionately to shareholders based on their shares as of November 1, after such additional shares become available. If additional shares are required to be issued by NMFS, such as may be required in the resolution of disputes, shares would be proportionately reduced, based on shares as of November 1 after the share reduction took place.

The transfer of shares would be prohibited for the first 6 months after the date that ITQ coupons are required to be carried on board. From 6 months after the date that ITQ coupons are required to be carried on board, to 18 months after such date, shares could be transferred only to persons who are initial shareholders and are U.S. citizens or permanent resident aliens. Thereafter, ITQ participants may transfer all or a portion of their percentage shares to any person who is a U.S. citizen or permanent resident alien. The restrictions on initial transfers of shares are intended to provide time for NMFS to prepare for that activity and to prevent speculative entry during the beginning phase of the ITQ program while participants adjust to the system.

Amendment 8 proposes to limit share transfers to natural persons who are U.S. citizens or permanent resident aliens. A person includes a corporation, partnership, or other legal entity. However, ''natural person,'' as used in Amendment 8, would preclude transfers of shares to a corporation, partnership, etc. NOAA General Counsel has determined that the rationale for this exclusion is inadequate. Accordingly, the restriction regarding transfers only to ''natural persons'' is considered to be arbitrary, has been disapproved by the Regional Director, and is not included in this proposed rule.

All transfers of shares would have to be registered with and confirmed by the Regional Director. An administrative fee would be charged for each transaction of shares. Share transactions would not be recorded or confirmed during November and December, each year. During those months, the Regional Director would calculate each shareholder's allocation of the commercial quota for the ensuing fishing year and issue ITQ coupons for that year. The fishing year for reef fish begins on January 1 and ends on December 31.

ITQ Coupons

Amendment 8 proposes to assign 100 percent of the commercial red snapper quota to the ITQ system. The commercial quota is in terms of whole weight. Since red snapper are typically landed eviscerated, landings in eviscerated weight are converted to whole weight for quota monitoring. Accordingly, each shareholder's ITQ would be the product of the red snapper commercial quota, in whole weight, for the ensuing fishing year, the factor for converting whole weight to eviscerated weight, and each shareholder's percentage share as of November 1 of the preceding year. The factor for converting whole weight to eviscerated weight is .9009. If the commercial quota for red snapper remains 3.06 million lb (1.39 million kg), a shareholder with a 1 percent share would be entitled to ITQ coupons totaling 27,570 lb (12,506 kg) (3,060,000 X .9009 X .01 = 27,567.54, rounded to the nearest 10 lb = 27,570). A shareholder with a minimum share of .0033 percent would be entitled to ITQ coupons totaling 90 lb (41 kg) (3,060,000 X .9009 X .000033 = 91.0, rounded to the nearest 10 lb = 90). Thus, ITQ coupons would be in terms of eviscerated weight of red snapper.

The Regional Director would issue ITQ coupons in various denominations that equal the shareholder's calculated total based on shares owned on November 1. Each coupon would be coded to indicate the initial recipient. Coupons would be transferrable by completing the sale endorsement thereon, including the name of the recipient and the signature of the seller.

Use of ITQ Coupons

Under the ITQ system, red snapper in or from the exclusive economic zone (EEZ) or on board a vessel with a Federal reef fish permit may not be possessed in an amount, in eviscerated weight, that exceeds the total of ITQ coupons on board.

Each coupon would have separable parts, i.e., a ''Fisherman'' part and a ''Fish House'' part. Prior to termination of a trip, the operator's signature in ink and the date signed would be required on the ''Fisherman'' part of ITQ coupons, which must be in denominations at least equal to the eviscerated weight of the red snapper on board. (The factor for converting whole weight to eviscerated weight is 0.9009.) The ''Fisherman'' part of each ITQ coupon would be separated from the coupon and submitted with the logbook forms for that fishing trip. An owner or operator of a vessel would be required to make available to an authorized officer all ITQ coupons in his or her possession upon request.

Red snapper harvested in the EEZ or by a permitted vessel would be transferrable only to a dealer who holds a Federal reef fish dealer permit. The permitted vessel operator would give the ''Fish House'' part of each ITQ coupon to each dealer to whom the red snapper are transferred, which again must be in denominations equal to the eviscerated weight of the red snapper transferred to that dealer.

A Federally permitted dealer would be allowed to receive red snapper only from a vessel that has its reef fish vessel permit and ITQ coupons on board. This restriction on dealers is necessary for effective monitoring and enforcement of the ITQ system. However, this requirement may impose an unreasonable restraint on trade for fishermen on board unpermitted vessels who harvest red snapper solely from state waters. (See below for a related concern regarding the effect of commercial harvests from state waters of red snapper outside the ITQ system.) Public comments on this aspect of Amendment 8 and the proposed rule are specifically solicited.

A Federally permitted dealer would be required to receive the ''Fish House''

part of ITQ coupons in denominations at least equal to the eviscerated weight of the red snapper received. The dealer would be required to: (1) Indicate the date received; (2) enter the vessel's and dealer's permit numbers; (3) sign each ''Fish House'' part; and (4) submit all such parts to the Science and Research Director, Southeast Fisheries Science Center, at monthly intervals, or more frequently if requested by the Science and Research Director. A dealer would be required to make available to an authorized officer all ITQ coupons in his or her possession upon request. A dealer would be required to have signed and dated coupons in amounts at least equalling the pounds of red snapper in his or her possession until such coupons are submitted to the Science and Research Director.

Entire Commercial Quota Under ITQ System

As discussed above, ITQ coupons would be issued for the entire commercial quota for red snapper. The commercial quota includes red snapper harvested from both the EEZ and adjoining state waters of the Gulf of Mexico. Federal jurisdiction, however, does not extend to vessels that do not have Federal reef fish vessel permits and fish only in state waters, or to dealers who do not have Federal dealer permits and purchase reef fish harvested only in state waters. Accordingly, the management measure of Amendment 8 that proposes that 100 percent of the commercial quota of red snapper be under the ITQ system relies on compatible state regulations. Specifically, state regulations should ensure that red snapper harvested from state waters by vessels that do not have Federal permits are not sold or purchased without Federal ITQ coupons.

To the extent that non-compatible state regulations allow red snapper to be harvested outside the ITQ system, the system would be compromised because monitoring and enforcement would be hindered. In addition, the FMP requires that a commercial fishery be closed when its quota is reached. Thus, commercial harvests of red snapper outside the ITQ system would directly impact holders of ITQ coupons. NMFS is concerned with this potential obstacle to an effective ITQ system and is requesting the Gulf of Mexico states to enact compatible regulations. Public comments on this aspect of Amendment 8 and the proposed rule are specifically solicited.

Magnuson Act Considerations

Section 303 of the Magnuson Act provides that a Council may establish a system for limiting access to the fishery in order to achieve OY if, in developing such system, the Council takes into account the following factors: (1) Present participation in the fishery; (2) historical fishing practices in, and dependence on, the fishery; (3) the economics of the fishery; (4) the capability of fishing vessels used in the fishery to engage in other fisheries; (5) the cultural and social framework relevant to the fishery; and (6) any other relevant considerations. The Council's consideration of these factors, as well as additional background and rationale for the management measures comprising the ITQ system, are contained in Amendment 8, the availability of which was announced in the *Federal Register* on July 21, 1995, (60 FR 37624).

Partial Disapproval of Amendment 8

As discussed above, the Regional Director has partially disapproved Amendment 8. The disapproved measures specify that: (1) ITQ share transfers be limited to natural persons; (2) the appeals board consider hardship cases; and (3) up to 3 percent of the initial allocation be set aside for ITQ hardship cases.

Minority Report

A minority report signed by three Council members raised various objections to Amendment 8. Copies of the minority report are available (see **ADDRESSES**). The final rule will respond to the minority report and to comments on the proposed rule received by NMFS during the 45-day comment period.

Additional Measure Proposed by NMFS

The current regulations specify that, as a prerequisite to selling reef fish, an owner or operator of a vessel that fishes in the EEZ must obtain an annual vessel permit (50 CFR 641.4(a)(1)(i)). For clarity, NMFS would reference this requirement in the proposed paragraph that discusses sale of reef fish possessed under the bag limits (50 CFR 641.24(g)) and include a corresponding prohibition in the prohibitions section (50 CFR 641.7).

Classification

Section 304(a)(1)(D) of the Magnuson Act requires NMFS to publish regulations proposed by a Council within 15 days of receipt of an amendment and regulations. At this time, NMFS has not determined that provisions of Amendment 8 not already specifically disapproved as discussed above are consistent with the national standards, other provisions of the Magnuson Act, and other applicable laws. NMFS, in making that determination with respect to the remaining parts of Amendment 8, will take into account the data, views, and comments received during the comment period.

This proposed rule has been determined to be not significant for purposes of E.O. 12866.

The Council prepared an IRFA as part of the RIR. The IRFA describes the impacts that this proposed rule would have on small entities, if adopted. The impacts are summarized as follows. All participants in the fishery are small entities and an ITQ system will affect a substantial number of them. Significant positive economic benefits will accrue to participants who are initial shareholders in the ITQ system. There will be negative economic effects for those not included as initial shareholders. The negative economic effects may exceed 5 percent of gross revenues depending on the management regime used for comparison, that is, open access or the current red snapper endorsement system. In either case, the overall positive economic benefits significantly exceed the negative economic effects. No small businesses are expected to cease operations as a result of this action, because the system recognizes historical participation in the red snapper fishery. Thus, any fisherman who has fished red snapper so continuously as to be economically dependant upon the fishery, likely will qualify as an initial ITQ shareholder. Furthermore, fishermen who do not have a recent history of catches will be able to enter the fishery through the purchase of red snapper ITQ shares or coupons. A copy of the IRFA is available from the Council (see **ADDRESSES**).

This rule proposes a new, one-time collection of information and three new, continuing collections, namely: (1) The one-time submission of a request for appeal of tentative share allocations and of determinations of historical captain status; (2) the submission by fishermen and dealers of ITQ coupons; (3) requests for transfer of ITQ shares; and (4) monthly dealer reports when red snapper are received. Requests to collect this information have been submitted to OMB for approval. The public reporting burdens for these collections of information are estimated to average 90, 1, 15, and 15 minutes per response, respectively.

This proposed rule would revise the submission of applications for dealer permits by requiring permits for dealers who receive red snapper harvested by

Federally permitted vessels from state waters adjoining the EEZ in the Gulf of Mexico. The collection of information on such applications currently is approved under OMB Control No. 0648-0205. The public reporting burden for this collection was estimated at 5 minutes per response and is unchanged by the proposed revision.

This rule involves the collection of information under Amendment 9 of landings records during the period 1990 through 1992. That collection is currently approved under OMB Control No. 0648-0281 and its public reporting burden is estimated at 2 hours per response.

Each of the above reporting burden estimates includes the time for reviewing instructions, searching existing data sources, gathering and maintaining the data needed, and completing and reviewing the collections of information. Send comments regarding any of these reporting burden estimates or any other aspects of the collections of information, including suggestions for reducing the burdens, to NMFS and OMB (see **ADDRESSES**).

List of Subjects in 50 CFR Part 641

Fisheries, Fishing, Reporting and recordkeeping requirements.

Dated: August 22, 1995.

Gary Matlock,

Program Management Officer, National Marine Fisheries Service.

For the reasons set out in the preamble, 50 CFR part 641 is proposed to be amended as follows:

PART 641—REEF FISH FISHERY OF THE GULF OF MEXICO

1. The authority citation for part 641 continues to read as follows:

Authority: 16 U.S.C. 1801 *et seq.*

2. In § 641.1, paragraph (b) is revised to read as follows:

§ 641.1 Purpose and scope.

* * * * *

(b) This part governs conservation and management of reef fish in the Gulf of Mexico EEZ, except that §§ 641.5 and 641.25 also apply to reef fish from adjoining state waters and § 641.4(a)(2) and (q) also apply in the manner stated therein to red snapper from adjoining state waters. The Gulf of Mexico EEZ extends from the U.S./Mexico border to the intercouncil boundary between the South Atlantic and Gulf of Mexico Fishery Management Councils, as specified at 50 CFR 601.11(c). ''EEZ'' in this part refers to the EEZ in the Gulf of Mexico, unless the context clearly indicates otherwise.

3. In § 641.2, the definition of ''Science and Research Director'' is revised to read as follows:

§ 641.2 Definitions.

* * * * *

Science and Research Director means the Science and Research Director, Southeast Fisheries Science Center, NMFS, 75 Virginia Beach Drive, Miami, FL 33149, telephone: 305-361-5761; or a designee.

* * * * *

4. In § 641.4, the first sentence of paragraph (a)(2) and the third sentence of paragraph (i) are revised, and paragraph (q) is added to read as follows:

§ 641.4 Permits and fees.

(a) * * *

(2) * * * A dealer who receives from a fishing vessel reef fish harvested from the EEZ, or red snapper from adjoining state waters that are harvested by or possessed on board a vessel with a Federal permit issued under this section, must obtain an annual dealer permit. * * *

* * * * *

(i) * * * In addition, a copy of the dealer's permit must accompany each vehicle that is used to pick up from a fishing vessel reef fish harvested from the EEZ or red snapper from adjoining state waters that are harvested by or possessed on board a vessel with a permit issued under this section. * * *

* * * * *

(q) *Permit conditions.* (1) As a condition of a vessel permit issued under this section, without regard to where red snapper are harvested or possessed, a permitted vessel—

(i) Must comply with the red snapper individual transferrable quota requirements of § 641.10(b).

(ii) May not transfer red snapper at sea or receive red snapper at sea.

(iii) Must maintain red snapper with head and fins intact through landing, and the exceptions to that requirement contained in § 641.21(b)(3) and (b)(4) do not apply to red snapper. Such red snapper may be eviscerated, gilled, and scaled but must otherwise be maintained in a whole condition.

(2) As a condition of a dealer permit issued under this section, without regard to where red snapper are harvested or possessed, a permitted dealer must comply with the red snapper individual transferrable quota requirements of § 641.10(b).

5. In § 641.5, paragraph (d)(3) is redesignated as paragraph (d)(4), paragraph (d)(2) is revised, and paragraph (d)(3) is added to read as follows:

§ 641.5 Recordkeeping and reporting.

* * * * *

(d) * * *

(2) In any month that a red snapper is received, a dealer must report total poundage of red snapper received during the month, in whole or eviscerated weight, the average monthly price paid for red snapper by market size, and the proportion of total poundage landed by each gear type. The ''Fish House'' parts of red snapper individual transferrable coupons, received during the month in accordance with § 641.10(b), must be submitted with the report to the Science and Research Director postmarked not later than 5 days after the end of the month.

(3) For reef fish other than red snapper, when requested by the Science and Research Director, a dealer must provide the following information from his/her record of reef fish received: total poundage of each species received during the requested period, average monthly price paid for each species by market size, and proportion of total poundage landed by each gear type.

* * * * *

6. In § 641.7, paragraphs (g), (r), (s), and (bb) are revised and paragraphs (ee) through (kk) are added to read as follows:

§ 641.7 Prohibitions.

* * * * *

(g) Possess a finfish without its head and fins intact, as specified in § 641.21(b); or a red snapper without its head and fins intact, as specified in § 641.4(q)(1)(iii).

* * * * *

(r) Transfer reef fish at sea, as specified in § 641.24(f); or transfer or receive red snapper at sea, as specified in § 641.4(q)(1)(ii).

(s) Purchase, barter, trade, or sell, or attempt to purchase, barter, trade, or sell, a reef fish—

(1) Harvested from the EEZ by a vessel that does not have a valid Federal permit, or

(2) Possessed under the bag limits—as specified in § 641.24(g).

* * * * *

(bb) Receive from a fishing vessel, by purchase, trade, or barter, reef fish harvested from the EEZ or red snapper from adjoining state waters harvested by or possessed on board a vessel with a Federal permit, without a dealer permit, as specified in § 641.4(a)(2).

* * * * *

(ee) Falsify information required for administration of the individual transferable quota (ITQ) system specified in § 641.10.

(ff) Possess an ITQ coupon not issued to him or her or, if acquired by transfer, without all required sale endorsements properly completed thereon, as specified in § 641.10(b)(3).

(gg) Possess red snapper in or from the EEZ, or on board a federally permitted vessel, in an amount exceeding the total of the ITQ coupons on board, or without the vessel permit on board, as specified in § 641.10(b)(4).

(hh) Fail to sign and date the ''Fisherman'' part of ITQ coupons or fail to submit such coupon parts with the logbook forms for that fishing trip, as specified in § 641.10(b)(5).

(ii) Transfer red snapper harvested from the EEZ, or possessed by a permitted vessel, to a dealer who does not have a Federal permit, or fail to give a dealer the ''Fish House'' part of ITQ coupons, as specified in § 641.10(b)(6).

(jj) As a permitted dealer—

(1) Receive red snapper from a vessel that does not have a reef fish permit;

(2) Fail to receive the ''Fish House'' part of ITQ coupons in denominations at least equal to the eviscerated weight of red snapper received; or

(3)—Fail to properly complete the ''Fish House'' parts of ITQ coupons as specified in § 641.10(b)(7).

(kk) Fail to make ITQ coupons available to an authorized officer, as specified in § 641.10(b)(5) and (b)(7).

7. Section 641.10 is added to subpart A to read as follows:

§ 641.10 Red snapper individual transferable quota (ITQ) system.

The ITQ system established by this section will remain in effect for 4 years after the date that ITQ coupons must be carried on board, during which time NMFS and the Gulf of Mexico Fishery Management Council (Council) will evaluate the effectiveness of the system. Based on the evaluation, the system may be modified, extended, or terminated.

(a) *Percentage shares.* (1) Initial percentage shares of the annual commercial quota of red snapper will be assigned to persons in accordance with the procedure specified in Amendment 8 to the Fishery Management Plan for the Reef Fish Fishery of the Gulf of Mexico (FMP) and in paragraphs (c)(1) through (c)(4) of this section. Each person will be notified by the Regional Director of his or her initial percentage shares. If additional shares become available to NMFS, such as by forfeiture pursuant to subpart F of 15 CFR part 904 for rule violations, such shares will be proportionately issued to shareholders based on their shares as of November 1 after the additional shares become available. If additional shares are required to be issued by NMFS, such as may be required in the resolution of disputes, existing shares will be proportionately reduced. This reduction of shares will be based on shares as of November 1 after the required addition of shares.

(2) All or a portion of a person's percentage shares may be transferred to another person who is a U.S. citizen or permanent resident alien. (See paragraph (c)(5) of this section for restrictions on the transfer of shares in the initial months under the ITQ system). Transfer of shares must be reported on a form available from the Regional Director. The Regional Director will confirm, in writing, each transfer. The effective date of each transfer is the confirmation date provided by the Regional Director. The confirmation date will normally be not later than 3 working days after receipt of a properly completed transfer form. However, reports of share transfers received by the Regional Director from November 1 through December 31 will not be recorded or confirmed until after January 1. A fee will be charged for each transfer of percentage shares. The amount of the fee is calculated in accordance with the procedures of the NOAA Finance Handbook for determining the administrative costs of each special product or service provided by NOAA to non-Federal recipients. The fee may not exceed such costs and will be specified with each transaction form. The appropriate fee must accompany each submitted transaction form.

(3) On or about January 1 each year, the Regional Director will provide each red snapper shareholder with a list of all red snapper shareholders and their percentage shares, reflecting share transactions as indicated on properly completed transaction forms received through October 31. Updated lists may be obtained at other times by written request to the Regional Director.

(b) *ITQs.* (1) Annually, as soon after November 15 as the following year's red snapper commercial quota is established, the Regional Director will calculate each red snapper shareholder's ITQ in terms of eviscerated weight. Each ITQ is the product of the red snapper commercial quota, in whole weight, for the ensuing fishing year, the factor for converting whole weight to eviscerated weight, and each red snapper shareholder's percentage share, reflecting share transactions reported on forms received by the Regional Director through October 31.

(2) The Regional Director will provide each red snapper shareholder with ITQ coupons in various denominations, the total of which equals his or her ITQ, and a copy of the calculations used in determining his or her ITQ. Each coupon will be coded to indicate the initial recipient.

(3) An ITQ coupon may be transferred by completing the sale endorsement thereon, including the name of the recipient and the signature of the seller.

(4) Except when the red snapper bag limit applies, red snapper in or from the EEZ or on board a vessel that has been issued a reef fish permit under § 641.4 may not be possessed in an amount, in eviscerated weight, exceeding the total of ITQ coupons on board. (See § 641.24(a) for applicability of the bag limit.)

(5) Prior to termination of a trip, the operator's signature and the date signed must be written in ink on the ''Fisherman'' part of ITQ coupons totalling at least the eviscerated weight of the red snapper on board. The ''Fisherman'' part of each such coupon must be separated from the coupon and submitted with the logbook forms for that fishing trip. An owner or operator of a vessel must make available to an authorized officer all ITQ coupons in his or her possession upon request.

(6) Red snapper harvested from the EEZ or possessed by a vessel with a permit issued under § 641.4 may be transferred only to a dealer with a permit issued under § 641.4. The ''Fish House'' part of each ITQ coupon must be given to such dealer in amounts totalling at least the eviscerated weight of the red snapper transferred to that dealer.

(7) A dealer with a permit issued under § 641.4 may receive red snapper only from a vessel that has on board a reef fish permit issued under § 641.4. A dealer must receive the ''Fish House'' part of ITQ coupons totalling at least the eviscerated weight of the red snapper received. The dealer must enter the permit number of the vessel received from, enter the dealer's permit number, date and sign each such ''Fish House'' part, and submit all such parts as required by § 641.5(d)(2). A dealer must make available to an authorized officer all ITQ coupons in his or her possession upon request.

(c) *Procedures for Implementation*—(1) *Initial shareholders.* The following persons are initial shareholders in the red snapper ITQ system:

(i) Either the owner or operator of a vessel with a valid permit on August 29, 1995, provided such owner or operator have landing of red snapper during the period 1990 through 1992. If the earned income of an operator was used to qualify for the permit that is valid on August 29, 1995, such operator is the initial shareholder rather than the owner. In the case of an owner, a person

includes a corporation or other legal entity; and

(ii) A historical captain. A historical captain means an operator who—

(A) From November 6, 1989, through 1993, fished solely under verbal or written share agreements with an owner, and such agreements provided for the operator to be responsible for hiring the crew, who was paid from the share under his or her control;

(B) Landed from that vessel at least 5,000 lb (2,268 kg) of red snapper per year in 2 of the 3 years 1990, 1991, and 1992;

(C) Derived more than 50 percent of his or her earned income from commercial fishing, that is, sale of the catch, in each of the years 1989 through 1993; and

(D) Landed red snapper prior to November 7, 1989.

(2) *Initial shares*. (i) Initial shares will be apportioned to initial shareholders based on each shareholder's average of the top 2 years' landings in 1990, 1991, and 1992. However, no person who is an initial shareholder under paragraph (c)(1) of this section will receive an initial percentage share that will amount to less than 100 lb (45.36 kg), whole weight, of red snapper (90 lb (41 kg), eviscerated weight).

(ii) The percentage shares remaining after the minimum shares have been calculated under paragraph (c)(2)(i) of this sections will be apportioned based on each remaining shareholder's average of the top 2 years' landings in 1990, 1991, and 1992. In a case where a landing is associated with an owner and a historical captain, such landing will be apportioned between the owner and historical captain in accordance with the share agreement in effect at the time of the landing.

(iii) The determinations of landings of red snapper during the period 1990 through 1992 and historical captain status will be made in accordance with the data collected under Amendment 9 to the FMP. Those data identify each red snapper landing during the period 1990 through 1992. Each landing is associated with an owner and, when an operator's earned income qualified him or her for the vessel permit at the time of the landing, with such operator. Where appropriate, a landing is also associated with a historical captain. However, a red snapper landings record during that period, that is associated solely with an owner may be retained by that owner or transferred as follows:

(A) An owner of a vessel with a valid reef fish permit on August 29, 1995, who transferred a vessel permit to another vessel owned by him or her will retain the red snapper landings record for the previous vessel.

(B) An owner of a vessel with a valid reef fish permit on August 29, 1995, will retain the landings record of a permitted vessel if the vessel had a change of ownership to another entity without a substantive change in control of the vessel. It will be presumed that there was no substantive change in control of a vessel if a successor in interest received at least a 50 percent interest in the vessel as a result of the change of ownership whether the change of ownership was—

(*1*) From a closely held corporation to its majority shareholder;

(*2*) From an individual who became the majority shareholder of a closely held corporation receiving the vessel;

(*3*) Between closely held corporations with a common majority shareholder; or

(*4*) From one to another of the following: Husband, wife, son, daughter, brother, sister, mother, or father.

(C) In other cases of transfer of a permit through change of ownership of a vessel, an owner of a vessel with a valid reef fish permit on August 29, 1995, will receive credit for the landings record of the vessel before his or her ownership only if there is a legally binding agreement for transfer of the landings record.

(iv) Requests for transfers of landings records must be submitted to the Regional Director within 15 days after the date of publication of the final rule to implement the ITQ system. The Regional Director may require documentation supporting such request. After considering requests for transfers of landings records, the Regional Director will advise each initial shareholder or applicant of his or her tentative allocation of shares.

(3) *Notification of status*. The Regional Director will advise each owner, operator, and historical captain for whom NMFS has a record of a red snapper landing during the period 1990 through 1992, including those who submitted such record under Amendment 9 to the FMP, of his or her tentative status as an initial shareholder and the tentative landings record that will be used to calculate his or her initial share.

(4) *Appeals*. (i) A special advisory panel, appointed by the Gulf of Mexico Fishery Management Council to function as an appeals board, will consider written requests from persons who contest their tentative status as an initial shareholder, including historical captain status, or tentative landings record. In addition to considering written requests, the board may allow personal appearances by such persons before the board.

(ii) The board is only empowered to consider disputed calculations or determinations based on documentation submitted under Amendment 9 to the FMP regarding landings of red snapper during the period 1990 through 1992, including transfers of such landings records, or regarding historical captain status. In addition, the board may consider applications and documentation of landings not submitted under Amendment 9 if, in the board's opinion, there is justification for the late application and documentation. The board is not empowered to consider an application from a person who believes he or she should be eligible because of hardship or other factors.

(iii) A written request for consideration by the board must be submitted to the Regional Director not later than 30 days after the date of publication of the final rule to implement the ITQ system and must contain documentation supporting the allegations that form the basis for the request.

(iv) The board will meet as necessary to consider each request that is submitted in a timely manner. Members of the appeals board will provide their individual recommendations for each appeal to the Council, which will in turn submit its recommendation to the Regional Director. The board and the Council will recommend whether the eligibility criteria, specified in Amendment 8 of the FMP and paragraphs (c)(1) and (c)(2) of this section, were correctly applied in each case, based solely on the available record including documentation submitted by the applicant. The Council will also base its recommendation on the recommendations of the board. The Regional Director will decide the appeal based on the above criteria and the available record, including documentation submitted by the applicant and the recommendation of the Council. The Regional Director will notify the appellant of his decision and the reason therefor, in writing, normally within 45 days of receiving the Council's recommendation. The Regional Director's decision will constitute the final administrative action by NMFS on an appeal.

(v) Upon completion of the appeal process, the Regional Director will issue share certificates to initial shareholders.

(5) *Transfers of shares*. The following restrictions apply to the transfer of shares:

(i) The transfer of shares is prohibited for the first 6 months after the date that

ITQ coupons are required to be carried on board.

(ii) From 6 months after the date that ITQ coupons are required to be carried on board to 18 months after such date, shares may be transferred only to persons who are initial shareholders and are U.S. citizens or permanent resident aliens.

8. In § 641.24, paragraphs (a)(2) and (a)(3) are redesignated as paragraphs (a)(3) and (a)(4), respectively; in newly redesignated paragraph (a)(4), the reference to ''paragraph (a)(2)(ii)(C)'' is revised to read ''paragraph (a)(1)(ii)(C)''; paragraph (a)(2) is added; and paragraph (g) is revised to read as follows:

§ 641.24 Bag and possession limits.

(a) * * *

(2) In addition, the bag limit for red snapper applies to a person on board a vessel with a permit specified in § 641.4 when that vessel does not have ITQ coupons on board.

* * * * *

(g) *Sale*. A reef fish harvested in the EEZ by a vessel that does not have a valid permit, as required by § 641.4(a)(1), or possessed under the bag limits specified in paragraph (b) of this section, may not be purchased, bartered, traded, or sold, or attempted to be purchased, bartered, traded, or sold.

[FR Doc. 95–21327 Filed 8–23–95; 5:01 pm]

BILLING CODE 3510–22–F

Notices

Federal Register
Vol. 60, No. 167
Tuesday, August 29, 1995

This section of the FEDERAL REGISTER contains documents other than rules or proposed rules that are applicable to the public. Notices of hearings and investigations, committee meetings, agency decisions and rulings, delegations of authority, filing of petitions and applications and agency statements of organization and functions are examples of documents appearing in this section.

DEPARTMENT OF AGRICULTURE

Forms Under Review by Office of Management and Budget

August 23, 1995.

The Department of Agriculture has submitted to OMB for review the following proposal for the collection of information under the provisions of the Paperwork Reduction Act (44 U.S.C. Chapter 35) since the last list was published. This list is grouped into new proposals, revisions, extension, or reinstatements. Each entry contains the following information:

(1) Agency proposing the information collection; (2) Title of the information collection; (3) Form number(s), if applicable; (4) Who will be required or asked to report; (5) An estimate of the number of responses; (6) An estimate of the total number of hours needed to provide the information; (7) Name and telephone number of the agency contact person.

Questions about the items in the listing should be directed to the agency person named at the end of each entry. Copies of the proposed forms and supporting documents may be obtained from: Department Clearance Officer, USDA, OIRM, Room 404–W, Jamie L. Whitten Bldg., Washington, D.C. 20250, (202) 690–2118.

Revision

- Forest Service

Special-use Application, Permitting, and Administration Program—Addendum
FS–2700–3, SF–299, FS–2700–3A, FS–2700–3B, FS–2700–4A, FS–2700–7, FS–2700–8, FS–2700–10, FS–2700–19, FS–2700–24
Individuals or households; 56,738 responses; 68,488 hours
Mark Scheibel (202) 205–1371

- Forest Service

Disposal of National Forest Timber—Timber Export and Substitution Restrictions
Business or other for-profit; Federal government; 26,420 responses; 6,085 hours
Rex Baumback (202) 205–0855

Larry K. Roberson,

Deputy Departmental Clearance Officer.

[FR Doc. 95–21387 Filed 8–28–95; 8:45 am]

BILLING CODE 3410–01–M

Forest Service

Camas Salvage Sales, Restoration, and Off-Highway Vehicle Trail Complex Projects, Umatilla National Forest, Umatilla and Union Counties, Oregon

AGENCY: Forest Service, USDA.

ACTION: Cancellation of an environmental impact statement.

SUMMARY: On July 15, 1992, a notice of intent to prepare an environmental impact statement (EIS) for the Camas Salvage Sales, Restoration, and Off-Highway Vehicle Trail Complex Projects on the Umatilla National Forest was published in the **Federal Register** (57 FR 31351). A draft EIS was released to public May 1993. A Notice of Availability for the draft EIS was published in the **Federal Register** on May 28, 1993 (58 FR 31026), with a comment period on the draft EIS ending July 23, 1993. The Forest Service has decided to terminate the preparation of an EIS for this proposed action.

FOR FURTHER INFORMATION CONTACT: Direct questions regarding this cancellation to David Herr, Environmental Coordinator, 2517 S.W. Hailey Ave., Pendleton, Oregon 97801 or telephone (503) 278–3869.

Dated: August 14, 1995.

John P. Kline,

Acting Forest Supervisor.

[FR Doc. 95–21374 Filed 8–28–95; 8:45 am]

BILLING CODE 3410–11–M

DEPARTMENT OF COMMERCE

Agency Forms Under Review by the Office of Management and Budget

DOC has submitted to the Office of Management and Budget (OMB) for clearance the following proposals for collection of information under the provisions of the Paperwork Reduction Act (44 U.S.C. Chapter 35).

Agency: Economic Development Administration (EDA).
Title: Employment Data of Recipient or Other Party Connected with EDA Assistance.
Form Number(s): ED–525.
Agency Approval Number: 0610–0021.
Type of Request: Extension of a currently approved collection.
Burden: 4 hours.
Number of Respondents: 100.
Avg Hours Per Response: 4 hours.
Needs and Uses: To obtain employment data to be analyzed to determine compliance status of recipients or other parties connected with EDA projects as required by 15 CFR 8.7.
Affected Public: Businesses or other for–profit organizations, not–for–profit institutions and State, Local or Tribal Government.
Frequency: On occasion.
Respondent's Obligation: Required to obtain or retain benefits.
OMB Desk Officer: Don Arbuckle, (202) 395–7340.

Agency: Economic Development Administration (EDA).
Title: Petition by a Firm for Certification of Eligibility to Apply for Trade Adjustment Assistance.
Form Number(s): EDA–840P.
Agency Approval Number: 0610–0091.
Type of Request: Extension of a currently approved collection.
Burden: 1,576 hours.
Number of Respondents: 197.
Avg Hours Per Response: 8 hours.
Needs and Uses: This form is necessary for producing firms to provide information demonstrating that increased imports are an important cause of its decline in sales and/or production and to the separation or threat of separation of a significant portion of its workers.
Affected Public: Business or other for–profit organizations and farms.
Frequency: On occasion.
Respondent's Obligation: Required to obtain or retain benefits.
OMB Desk Officer: Don Arbuckle, (202) 395–7340.

Agency: National Oceanic and Atmospheric Administration (NOAA).
Title: Marine Fisheries Initiative (MARFIN).
Form Number(s): None.
Agency Approval Number: 0648–0175.

Type of Request: Extension of a currently approved collection.
Burden: 390 hours.
Number of Respondents: 60.
Avg Hours Per Response: 6 hours.
Needs and Uses: The MARFIN program provides financial assistant to develop, rejuvenate, and maintain Gulf of Mexico fisheries. Any U.S. citizen may apply for funds to conduct research and development projects that meet MARFIN objectives. Application information is needed to select eligible projects, and reports are necessary to track the progress and results of funded research.
Affected Public: Businesses or other for–profit organizations, not–for–profit institutions, Federal Government, and State, Local or Tribal Government.
Frequency: On occasion.
Respondent's Obligation: Required to obtain or retain benefits.
OMB Desk Officer: Don Arbuckle, (202) 395–7340.

Agency: National Oceanic and Atmospheric Administration (NOAA).
Title: Survey of Intent and Capacity to Harvest and Process Fish and Shellfish, Northeast Region.
Form Number(s): None.
Agency Approval Number: 0648–0235.
Type of Request: Extension of a currently approved collection.
Burden: 10 hours.
Number of Respondents: 54.
Avg Hours Per Response: 20 minutes.
Needs and Uses: Domestic processors and joint venture operators in the surf clam/ocean quahog and squid/mackerel/butterfish fisheries are surveyed to determine their intent and capacity to utilize these species. The information obtained is used in the management of these fisheries.
Affected Public: Businesses or other for–profit organizations.
Frequency: On occasion.
Respondent's Obligation: Mandatory.
OMB Desk Officer: Don Arbuckle, (202) 395–7340.

Agency: National Oceanic and Atmospheric Administration (NOAA).
Title: Statement of Financial Interests (for Use by Members and Executive Directors of Regional Fishery Management Councils).
Form Number(s): NOAA Form 88-195.
Agency Approval Number: 0648–0192.
Type of Request: Extension of a currently approved collection.
Burden: 122 hours.
Number of Respondents: 209.
Avg Hours Per Response: Approximately 2 hours.
Needs and Uses: Section 302(k) of the Magnuson Fishery Conservation and Management Act requires disclosure of financial interests in any harvesting, processing, or marketing activity by nominees, voting members, and executive directors of the regional Fishery Management Councils. The information is made available for public inspection.
Affected Public: Individuals or households and State, Local or Tribal Government.
Frequency: Annual.
Respondent's Obligation: Mandatory.
OMB Desk Officer: Don Arbuckle, (202) 395–7340.

Agency: National Oceanic and Atmospheric Administration (NOAA).
Title: Report of Radio Transmitting Antenna Construction, and/or Removal - Federal Communications Commission Rules and Regulations Part 17.56.
Form Number(s): NOAA Form 76–10.
Agency Approval Number: 0648–0096.
Type of Request: Extension of a currently approved collection.
Burden: 195 hours.
Number of Respondents: 780.
Avg Hours Per Response: 15 minutes.
Needs and Uses: Any construction, alteration, or removal of radio transmitting antenna must be reported. The information is used to produce accurate aeronautical charts.
Affected Public: Businesses or other for–profit organizations, not–for–profit institutions and State, Local or Tribal Government.
Frequency: Semi–annually.
Respondent's Obligation: Mandatory.
OMB Desk Officer: Don Arbuckle, (202) 395–7340.

Agency: National Oceanic and Atmospheric Administration (NOAA).
Title: Foreign Fishing Vessel Application/Permitting Process.
Form Number(s): NOAA Form 88–120.
Agency Approval Number: 0648–0089.
Type of Request: Extension of a currently approved collection.
Burden: 14 hours.
Number of Respondents: 4.
Avg Hours Per Response: 1 hour.
Needs and Uses: Section 204 of the Magnuson Fishery Conservation and Management Act provides that each foreign nation with which the U.S. has entered into a Governing International Fishery Agreement may submit annual applications to fish in the U.S. Exclusive Economic Zone. The application information enables NOAA to accomplish the permitting provisions of the Act.
Affected Public: Businesses or other for–profit organizations, and State, Local or Tribal Government.
Frequency: Yearly – Prior to the new fishing year.
Respondent's Obligation: Required to obtain or retain benefits.
OMB Desk Officer: Don Arbuckle, (202) 395–7340.

Agency: National Oceanic and Atmospheric Administration (NOAA).
Title: Surf Clam/Ocean Quahog Transfer Log.
Form Number(s): None.
Agency Approval Number: 0648–0238.
Type of Request: Extension of a currently approved collection.
Burden: 618 hours.
Number of Respondents: 52.
Avg Hours Per Response: 5 minutes.
Needs and Uses: The surf clam and ocean quahog fisheries are managed under an Individual Transferable Quota (ITQ) system under which harvest rights are allocated to individual owners based on their percentage share of the annual quota. Ownership is transferable, and this form is used to track such transfers.
Affected Public: Businesses or other for–profit organizations.
Frequency: Annual.
Respondent's Obligation: Mandatory.
OMB Desk Officer: Don Arbuckle, (202) 395–7340.

Agency: National Oceanic and Atmospheric Administration (NOAA).
Title: Application to Shuck Surf Clams/Ocean Quahogs.
Form Number(s): None.
Agency Approval Number: 0648–0240.
Type of Request: Extension of a currently approved collection.
Burden: 2 hours.
Number of Respondents: 2.
Avg Hours Per Response: 5 minutes.
Needs and Uses: The fishery management plan for surf clams.ocean quahogs require vessel owners to obtain approval for shucking–at–sea operations. Approval is required to facilitate observer placement.
Affected Public: Business or other for–profit.
Frequency: On occasion.
Respondent's Obligation: Required to obtain or retain benefits.
OMB Desk Officer: Don Arbuckle, (202) 395–7340.

Agency: National Oceanic and Atmospheric Administration (NOAA).
Title: Survey of Intent and Capacity to Harvest and Process Fish and Shellfish (Northwest Region).
Form Number(s): None.
Agency Approval Number: 0648–0243.
Type of Request: Extension of a currently approved collection.

Burden: 10 hours.

Number of Respondents: 60.

Avg Hours Per Response: 10 minutes.

Needs and Uses: The U.S. groundfish industry in the northwest is contacted up to twice yearly to determine its intent and capacity to utilize certain groundfish species. This information is needed to apportion groundfish quotas: (1) first to the domestic industry and secondly to foreign operations; and (2) within the domestic groundfish industry as required by the Magnuson Fishery Conservation and Management Act and the Pacific Coast Groundfish Fishery Management Plan.

Affected Public: Business or other for–profit organizations.

Frequency: Semi–Annual.

Respondent's Obligation: Mandatory.

OMB Desk Officer: Don Arbuckle, (202) 395–7340.

Agency: National Oceanic and Atmospheric Administration (NOAA).

Title: Inspection and Certification: Notice of Availability of NMFS HACCP–based Inspection Service.

Form Number(s): None.

Agency Approval Number: 0648–0266.

Type of Request: Extension of a currently approved collection.

Burden: 6,720 hours.

Number of Respondents: 35.

Avg Hours Per Response: 167 hours.

Needs and Uses: The information collected from participants will be used by NMFS in determining compliance with the inspection program. The reported information, the HACCP plan, describes the products and processing operations, the hazards associated with each step of the process, and the facility's monitoring procedures. NMFS will be auditing the facility and its records to determine the facility's maintenance of its plan.

Affected Public: Business or other for–profit organizations.

Frequency: Annual.

Respondent's Obligation: Required to obtain or maintain benefits.

OMB Desk Officer: Don Arbuckle, (202) 395–7340.

Copies of the above information collection proposals can be obtained by calling or writing Gerald Tache, DOC Forms Clearance Officer, (202) 482–3271, Department of Commerce, Room 5312, 14th and Constitution Avenue, NW, Washington, DC 20230.

Written comments and recommendations for the proposed information collections should be sent to Don Arbuckle, OMB Desk Officer, Room 10202 New Executive Office Building, Washington, DC 20503.

Dated: August 23, 1995.

Gerald Tache,

Departmental Forms Clearance Officer, Office of Management and Organization.

[FR Doc. 95–21313 Filed 8–28–95; 8:45 am]

BILLING CODE 3510–CW–F

International Trade Administration

[A–583–810]

Chrome-Plated Lug Nuts From Taiwan; Final Results of Antidumping Duty Administrative Review and Termination in Part

AGENCY: Import Administration, International Trade Administration, Department of Commerce.

ACTION: Notice of final results of antidumping duty administrative review and termination in part.

SUMMARY: On December 19, 1994, the Department of Commerce (the Department) published the preliminary results of administrative review of the antidumping duty order on chrome-plated lug nuts from Taiwan. The review covers seven firms and the period September 1, 1992, through August 31, 1993. Based on our analysis of the comments received, we determine the dumping margins have not changed from those presented in the preliminary results.

EFFECTIVE DATE: August 29, 1995.

FOR FURTHER INFORMATION CONTACT: Todd Peterson or Thomas Futtner, Office of Antidumping Compliance, Import Administration, International Trade Administration, U.S. Department of Commerce, 14th Street and Constitution Avenue, N.W., Washington, D.C. 20230; telephone (202) 482–4195 or 482–3814, respectively.

Applicable Statute and Regulations

The Department is conducting this review in accordance with section 751(a) of the Tariff Act of 1930, as amended (Act). Unless otherwise indicated, all citations to the statute and to the Department's regulations are in reference to the provisions as they existed on December 31, 1994.

Background

On December 19, 1994, the Department published the preliminary results (59 FR 65317) of its administrative review of the antidumping duty order on chrome plated lug nuts from Taiwan (September 20, 1991, 56 FR 47737). The Department has now completed this administrative review in accordance with section 751 of the Act.

Scope of the Review

The merchandise covered by this review is one-piece and two-piece chrome-plated lug nuts, finished or unfinished, which are more than 11/16 inches (17.45 millimeters) in height and which have a hexagonal (hex) size of at least 3/4 inches (19.05 millimeters) but not over one inch (25.4 millimeters), plus or minus 1/16 of an inch (1.59 mm). The term ''unfinished'' refers to unplated and/or unassembled chrome-plated lug nuts. The subject merchandise is used for securing wheels to cars, vans, trucks, utility vehicles, and trailers. Zinc-plated lug nuts, finished or unfinished, and stainless-steel capped lug nuts are not in the scope of this review. Chrome-plated lock nuts are also not in the scope of this review.

During the period of review, chrome-plated lug nuts were provided for under subheading 7318.16.00.00 of the Harmonized Tariff Schedule (HTS). Although the HTS subheading is provided for convenience and Customs purposes, our written description of the scope of this review is dispositive. This review covers seven firms; Gourmet Equipment (Taiwan) Corporation (Gourmet), Buxton International Corporation (Buxton), Chu Fong Metallic Industrial Works Co, Ltd, Transcend International, Kuang Hong Industrial Works, San Chien Industrial Works, Ltd, and Everspring Corporation, and the period September 1, 1993, through August 31, 1994.

Analysis of Comments Received

We invited interested parties to comment on the preliminary results. We received timely comments from one respondent, Buxton, and rebuttal comments from the petitioner, Consolidated International Automotive.

Comment

Respondent believes that the Department's use of overall best information available (BIA) to determine Buxton's preliminary margin was unsupported by the facts and not in accordance with the Department's past practice.

Buxton believes that its disclosure of several ''minor pieces of data'' not traceable to its audited financial statements is ''normal business practice'' and should not be seen as a deficiency. Buxton points to the Department's use of Sweaters Wholly or in Chief Weight of Man-Made Fiber from Taiwan; Final Results of Changed Circumstances Antidumping Duty Administrative Review, 58 FR 32644 (June 11, 1993) to justify its claim that

use of BIA is incorrect because in Buxton's opinion, Sweaters from Taiwan advocates the use of BIA only in cases of gross inconsistencies or deficiencies.

Buxton cites *Lasko Metal Products, Inc.* v. *United States,* Slip Op. 93–1242 (Fed. Cir. December 29, 1994) to point out that the purpose of the antidumping (AD) law is to determine the AD margin as accurately as possible. Buxton charges that by basing the entire margin on BIA, the Department has disregarded hundreds of verifiable items. Also, they claim the total BIA margin does not accurately reflect the true dumping margin.

Finally, Buxton cites *National Steel Corp.* v. *United States,* 18 CIT__, Slip. Op 94–194, at 11 (December 13, 1994), to emphasize that the Department only applies total BIA when a respondent ''has failed to submit information in a timely manner, or when part of the submitted data is sufficiently flawed so that the response as a whole is rendered unusable.'' Buxton claims that according to *Usinor Sacilor* v. *United States,* Slip Op. 94–197 at 14 (CIT December 19, 1994) total BIA is improper when data adjustments are minor or there is an inadvertent gap in the record.

Petitioner believes that the Department correctly applied a BIA margin to Buxton. Petitioner disagrees with Buxton's contention that the ''problem areas are minor''. Petitioner states that the respondent has the obligation to establish the validity and accuracy of all its reported expenses.

Petitioner states that the cooperative BIA rate assigned in the preliminary determination should be higher. Petitioner points to Brass Sheet and Strip from Sweden: Final Results of Antidumping Duty Administrative Review (57 FR 29278, July 1, 1992) for an explanation of the Department's BIA policy. There, the Department stated: ''The primary purpose of the BIA rule is to induce respondents to provide the Department with timely, complete or accurate information, so that the agency can achieve the fundamental purpose of the Tariff Act, namely 'determining current margins as accurately as possible'.'' Furthermore, petitioner notes the Department stated in Final Results of Antidumping Duty Administrative Review, Steel Jacks from Canada, 52 FR 32957 (September 1, 1987): ''To induce a noncomplying respondent to provide the necessary response to a future information request, the Department must select an appropriate BIA rate to encourage future compliance.''

Petitioner cites section 353.37(b) of the Department's regulations which defines the Department's latitude in assigning BIA rates: ''The best information available may include the factual information submitted in support of the petition or subsequently submitted by interested parties, * * * If an interested party refuses to provide factual information requested by the Secretary or otherwise impedes the proceeding, the Secretary may take that into account in determining what is the best information available.'' Petitioner further points to *Krupp Stahl A.G.* v. *United States,* Slip Op. 93–84 (CIT May 26, 1993) where the Court of International Trade affirmed the Department's broad discretion in determining which BIA rate to apply.

Department's Position

As the Department previously explained in the Preliminary Results of Antidumping Duty Administrative Review: Chrome-Plated Lug Nuts from Taiwan, 59 FR 65317 (December 19, 1994), reliance on the accounting system used for the preparation of the audited financial statements is a key and vital part of the Department's determination that a company's sales and constructed value data are credible. See Final Determination of Sales at Less Than Fair Value: Certain Hot-Rolled Carbon Steel Flat Products, Certain Cold-Rolled Carbon Steel Flat Products, and Certain Cut-To-Length Carbon Steel Plate from Korea, 58 FR 37176, 37186 (July 9, 1993). The reason for this is that use of internal documents that have not been audited and are not used for preparation of the financial statements or for any purpose outside internal deliberations of the company does not guarantee the accuracy of the information contained in the documents. Without such assurance, such costs are not verifiable.

Buxton used data from internal documents that could not be traced to its audited financial statements. As a result, it was not possible for the Department to follow its standard practice of reconciling a company's sales and cost data to the company's audited financial statements. See Notice of Preliminary Results of Antidumping Duty Administrative Review: Chrome-Plated Lug Nuts from Taiwan, 59 FR 65317 (December 19, 1994).

It is not enough for Buxton simply to claim that it reported its normal business practices with respect to certain expenses because this can in no way compensate for the fact that certain expenses cannot be traced to its independently audited financial statements. In this respect, a claim of ''normal business practices'' cannot overcome the deficiencies and inconsistencies present in its response. See Sweaters Wholly or in Chief Weight of Man-Made Fiber from Taiwan; Final Results of Changed Circumstances Antidumping Duty Administrative Review, 58 FR 32644, 32652 June 11, 1993.

Buxton misinterprets Sweaters from Taiwan as advocating use of BIA only in cases of gross inconsistencies or deficiencies. Rather, the Department determined that BIA was appropriate in Sweaters from Taiwan because the respondent's financial records were unreliable, as in the present case with Buxton. Because Buxton's records cannot be reconciled to its audited financial statements, the Department cannot be assured that all sales and costs have been appropriately reported. Similarly, in this respect, in Sweaters from Taiwan the Department was unable to determine to what extent transactions of a company were not recorded, and thus, ''the Department could not confirm that these transactions totaled only a few hundred dollars nor could we confirm that these were minor expenses,'' 58 FR at 32651. Because the Department was unable to verify the accuracy or completeness of Buxton's response, the Department was compelled by section 776(c) of the Act to use BIA. See Memorandum to Holly Kuga, Director, Office of Antidumping Compliance: ''Chrome-Plated Lug Nuts from Taiwan 9/1/92–8/31/93 Use of Best Information Available'' (Jan. 12, 1995), in the proprietary file of this case in the Central Records Unit, Room B–099.

Buxton's reliance on National Steel Corps is also misplaced. For the reasons explained above, the Department determined that Buxton's submission was sufficiently flawed so as to be unreliable because Buxton could not reconcile that submission to its audited financial statements. Thus, contrary to Buxton's assertions, National Steel Corps supports the Department's determination to use BIA because in both cases, ''part of the submitted data is sufficiently flawed, so that the response as a whole is rendered unusable.'' Slip Op. 94–194 at 11.

While we do not disagree with Buxton's reference to Lasko Metal for the general statutory proposition that dumping margins should be determined as accurately as possible, that statutory purpose cannot be carried out when part of the data submitted by the responding party is so flawed that it cannot be used. Thus, the court's statement in National Steel Corp. that the purpose of BIA is ''to induce respondents to provide Commerce with requested information

in a timely, complete, and accurate manner * * *'' is more to the point in this case. Slip OP. 94–194 at 8. Furthermore, when the Department must resort the BIA, the courts have recognized that ''[the best information available is not necessarily the most accurate information; rather it is information that has become usable due to a respondent's failure to provide accurate information.'' *Usinor Sacilor* v. *United States*, Slip op. 94–197 at 12 (CIT December 19, 1994) (citations omitted). Accordingly, because Buxton's submission could not be reconciled to its audited financial statements, we have determined to continue to apply BIA to Buxton.

In choosing a BIA rate it is the Department's policy to select a rate which will encourage respondents to provide the necessary response to future requests. The Department uses the following two-tier hierarchy to separate cooperative firms from non-cooperative firms (see Final Results of Antidumping Administrative Review of Antifriction Bearings and Parts Thereof from France, *et al.*, 58 FR 39739, July 26, 1993):

1. When a company refuses to cooperate with the Department or otherwise significantly impedes these proceedings, we use as BIA the higher of (1) The highest of the rates found for any firm for the same class or kind of merchandise in the same country of origin in the LTFV investigation or prior administrative reviews; or (2) the highest rate found in this review for any firm for the same class or kind of merchandise in the same country of origin.

2. When a company substantially cooperates with our requests for information and, substantially cooperates in verification, but fails to provide the information requested in a timely manner or in the form required or was unable to substantiate it, we used as BIA the highest of (1) The highest rate ever applicable to the firm for the same class or kind of merchandise from either the LTFV investigation or a prior administrative review or if the firm has never before been investigated or reviewed, the all others rate from the LTFV investigation; or (2) the highest calculated rate in this review for the class or kind of merchandise for any firm from the same country of origin.

In this instance, second-tier BIA applies to Buxton because it cooperated, but nevertheless failed to provide data which could be verified. As the Department is unable to compute a margin from verifiable information in this review, we determine that use of the all others rate established in the LTFV investigation is reasonable.

We are not convinced that there is justification in this case to depart from our past practice in determining the cooperative BIA rate.

Final Results of Review

As a result of comments received, we have not changed our preliminary results.

Manufacturer/exporter	Percent margin
Gourmet Equipment (Taiwan) Corporation	6.47
Buxton International Corporation	6.93
Chu Fong Metallic Industrial Works Co, Ltd	10.67
Transcend International	10.67
Kuang Hong Industrial Works	10.67
San Chien Industrial Works, Ltd	10.67
Everspring	6.93

*No shipments or sales subject to this review. The firm had no individual rate from any segment of this proceeding, so we are applying the all others rate from the LTFV investigation.

The Department shall determine, and the Customs Service shall assess, antidumping duties on all appropriate entries. The Department will issue appraisement instructions concerning all respondents directly to the U.S. Customs Service.

Furthermore, the following deposit requirements will be effective for all shipments of the subject merchandise, entered, or withdrawn from warehouse, for consumption on or after the publication date of these final results of administrative review, as provided for by section 751(a)(1) of the Tariff Act: (1) The cash deposit rate for the reviewed firms will be the rates outlined above; and (2) for previously reviewed or investigated companies not listed above, the cash deposit rate will continue to be the company-specific rate published for the most recent period; (3) if the exporter is not a firm covered in this review, a prior review, or in the original LTFV investigation, but the manufacturer is, the cash deposit rate will be the rate established for the most recent period for the manufacturer of the merchandise; and (4) if neither the exporter nor the manufacturer is a firm covered in this or any previous review conducted by the Department, the cash deposit rate will be 6.93%, the all others rate established in the LTFV investigation.

These deposit requirements shall remain in effect until publication of the final results of the next administrative review.

This notice serves as a final reminder to importers of their responsibility under 19 CFR 353.26 to file a certificate regarding the reimbursement of antidumping duties prior to liquidation of the relevant entries during this review period. Failure to comply with this requirement could result in the Secretary's presumption that reimbursement of antidumping duties occurred and the subsequent assessment of double antidumping duties.

This notice also serves as a reminder to parties subject to administrative protective order (APO) of their responsibility concerning the disposition of proprietary information disclosed under APO in accordance with 19 CFR 353.34(d). Timely written notification or conversion to judicial protective order is hereby requested. Failure to comply with the regulations and the terms of the APO is a sanctionable violation.

This administrative review and notice are in accordance with section 751(a)(1) of the Tariff Act (19 U.S.C. 1675(a)(1)) and 19 CFR 353.22.

Dated: August 4, 1995.

Susan G. Esserman,

Assistant Secretary for Import Administration.

[FR Doc. 95–21431 Filed 8–28–95; 8:45 am]

BILLING CODE 3510–DS–M

[A–583–810]

Chrome-Plated Lug Nuts From Taiwan; Preliminary Results of Antidumping Duty Administrative Review

AGENCY: Import Administration, International Trade Administration, Department of Commerce.

ACTION: Notice of preliminary results of antidumping duty administrative review.

SUMMARY: In response to a request by a petitioner, the Department of Commerce (the Department) is conducting an administrative review of the antidumping duty order on chrome-plated lug nuts from Taiwan. The review covers 21 manufacturers/exporters of the subject merchandise to the United States for the period September 1, 1993, through August 31, 1994. The review indicates the existence of margins for the firms.

We have preliminarily determined that sales have been made below the foreign market value (FMV). If these preliminary results are adopted in our final results of administrative review, we will instruct U.S. Customs to assess antidumping duties equal to the difference between United States price (USP) and the FMV.

Interested parties are invited to comment on these preliminary results.

EFFECTIVE DATE: August 29, 2995.

FOR FURTHER INFORMATION CONTACT: Todd Peterson or Thomas Futtner, Office of Antidumping Compliance, Import Administration, International Trade Administration, U.S. Department

of Commerce, 14th Street and Constitution Avenue, NW., Washington, DC 20230; telephone (202) 482–4195 or 482–3814, respectively.

Applicable Statute and Regulations

The Department is conducting this review in accordance with section 751(a) of the Tariff Act of 1930, as amended (the Act). Unless otherwise indicated, all citations to the statute and to the Department's regulations are in reference to the provisions as they existed on December 31, 1994.

SUPPLEMENTARY INFORMATION:

Background

On September 20, 1991, the Department published the antidumping duty order on chrome-plated lug nuts from Taiwan (56 FR 47736). The Department published a notice of ''Opportunity to Request Administrative Review'' on September 2, 1994 (59 FR 45664). The petitioner, Consolidated International Automotive, Inc. (Consolidated), requested that we conduct an administrative review for the period September 1, 1993, through August 31, 1994. We published a notice of ''Initiation of Antidumping and Countervailing Duty Administrative Review'' on October 13, 1994 (59 FR 51939), and sent questionnaires to the following firms: Anmax Industrial Co., Ltd. (Anmax), Buxton International Corporation (Buxton), Chu Fong Metallic Electric Co., Everspring Plastic Corp. (Everspring), Gingen Metal Corp. (Gingen), Goldwinate Associates, Inc. (Goldwinate), Gourmet Equipment Corporation (Gourmet), Hwen Hsin Enterprises Co., Ltd. (Hwen), Kwan How Enterprises Co., Ltd. (Kwan How), Kwan Ta Enterprises Co. Ltd. (Kwan Ta), Kuang Hong Industries, Ltd. (Kuang), Multigrand Industries Inc. (Multigrand), San Chien Electric Industrial Works, Ltd. (San Chien), San Shing Hardware Works Co., Ltd. (San Shing), Transcend International Co. (Transcend), Trade Union International Inc./Top Line (Top Line), Uniauto, Inc. (Uniauto) and Wing Tang Electrical Manufacturing Company, Inc. (Wing). Only Gourmet and Buxton responded to the questionnaire.

A review was also initiated on Chu Fong Metallic Industrial Corporation. However, an address could not be determined for Chu Fong Metallic Industrial Corporation. Questionnaires that were sent to Wing, Hwen, Kwan How, Kwan Ta, and Kuang Hong were returned as undeliverable. These firms will receive the ''all others'' rate established in the less-than-fair-value (LTFV) investigation.

The Department has now conducted the administrative review in accordance with section 751 of the Tariff Act of 1930, as amended (the Act).

Scope of the Review

Imports covered by this review are shipments of one-piece and two-piece chrome-plated lug nuts, finished or unfinished, more than 11/16 inches (17.45 millimeters) in height and which have a hexagonal (hex) size of at least 3/4 inches (19.05 millimeters) but not more than one inch (25.4 mm), plus or minus 1/16 of an inch (1.59 mm). The term ''unfinished'' refers to unplated and/or unassembled chrome-plated lug nuts. The subject merchandise is used for securing wheels to cars, vans, trucks, utility vehicles, and trailers. Zinc-plated lug nuts, finished or unfinished, and stainless-steel capped lug nuts are not in the scope of this review. Chrome-plated lock nuts are also not in the scope of this review.

During the period of review (POR), chrome-plated lug nuts were classifiable under Harmonized Tariff Schedule (HTS) subheading 7318.16.00.10. Although the HTS subheading is provided for convenience and Customs purposes, our written description of the scope of this review is dispositive.

Use of Best Information Available (BIA)

The Department sent questionnaires to, but received no responses from the following firms: Anmax, Chu Fong Metallic Electric Co., Everspring, Gingen, Goldwinate, Multigrand, San Chien, San Shing, Transcend, Top Line, and Uniauto. Accordingly, for these companies we applied the first-tier BIA rate of 10.67 percent, which is the highest rate the Department found in the original LTFV investigation.

The Department also sent questionnaires to Gourmet and Buxton who provided us with responses to our questionnaires. However, the Department was unable to reconcile the data Gourmet and Buxton submitted in their responses to our questionnaire with their audited financial statements (*see* verification reports for Buxton and Gourmet, July 21, 1995). Reliance on the accounting system used for the preparation of the audited financial statements is a key and vital part of the Department's determination that a company's sales and constructed value data are credible. Internal documents which have not been audited and are not used for the preparation of the financial statements or for any purpose other than internal deliberations of the company does not guarantee the accuracy of the information contained in the documents (*see Final Determination at Less Than Fair Value: Certain Hot-Rolled Carbon Steel Flat Products, Certain Cold-Rolled Carbon Steel Flat Products and Certain Cut-To-Length Carbon Steel Plate from Korea,* 58 FR 37186 (July 9, 1993)). Because their submissions were unreconcilable to their audited financial statements and thus unverifiable, we have determined to apply BIA to Gourmet and Buxton. Because these firms cooperated with our request for information, we applied the second-tier BIA rate of 6.47 percent to Gourmet and 6.93 percent to Buxton. These rates represent the highest rates ever applicable to each firm.

In deciding what to use as BIA, the Department's regulations provide that the Department may take into account whether a party refuses to provide requested information (19 CFR 353.37(b)). Thus, the Department determines, on a case-by-case basis, what constitutes BIA. For the purposes of these preliminary results, we applied the following two-tier BIA analysis where we were unable to use a company's response for purposes of determining a dumping margin (*see Final Results of Antidumping Duty Administrative Review of Antifriction Bearings and Parts Thereof from France, et al.,* 58 FR 39739, July 26, 1993):

1. When a company refuses to cooperate with the Department or otherwise significantly impedes these proceedings, we used as BIA the higher of (1) the highest of the rates found for any firm for the same class or kind of merchandise in the same country of origin in the original LTFV or prior administrative reviews; or (2) the highest rate found in this review for any firm for the same class or kind of merchandise in the same country of origin.

2. When a company substantially cooperates with our requests for information and, substantially cooperates in verification, but fails to provide the information requested in a timely manner or in the form required or was unable to substantiate it, we used as BIA the higher of (1) the highest rate ever applicable to the firm for the same class or kind of merchandise from either the LTFV investigation or a prior administrative review, or if the firm has never before been investigated or reviewed, the ''all others'' rate from the LTFV investigation; or (2) the highest calculated rate in this review for the class or kind of merchandise for any firm from the same country of origin.

Preliminary Results of Review

As a result of this review, we preliminarily determine that the following margins exist for the period September 1, 1993, through August 31, 1994:

Manufacturer/exporter	Percent margin
Gourmet Equipment (Taiwan) Corporation	6.47
Buxton International	6.93
Chu Fong Metallic Electric Co	10.67
Transcend International	10.67
Kuang Hong Industrial Works	10.67
San Chien Industrial Works, Ltd	10.67
Everspring Corporation	10.67
Anmax Industrial Co., Ltd	10.67
Everspring Plastic Corp	10.67
Gingen Metal Corp	10.67
Goldwinate Associates, Inc	10.67
Hwen Hsin Enterprises Co., Ltd	6.93
Kwan How Enterprises Co., Ltd	6.93
Kwan Ta Enterprises Co., Ltd	6.93
Kuang Hong Industries Ltd	6.93
Multigrand Industries Inc	10.67
San Shing Hardware Works Co., Ltd	10.67
Trade Union International Inc./Top Line	10.67
Uniauto, Inc	10.67
Wing Tang Electrical Manufacturing Company	6.93
Chu Fong Metallic Industrial Corporation	6.93

The Department shall determine, and the Customs Service shall assess, antidumping duties on all appropriate entries. Upon completion of this review, the Department will issue appraisement instructions on each manufacturer/exporter directly to the U.S. Customs Service.

Furthermore, the following deposit requirements will be effective for all shipments of the subject merchandise, entered, or withdrawn from warehouse, for consumption on or after the publication date of the final results of this administrative review, as provided for by section 751(a)(1) of the Act: (1) The cash deposit rate for the reviewed firms will be those firms' rates established in the final results of this administrative review; (2) for previously reviewed or investigated companies not listed above, the cash deposit rate will continue to be the company-specific rate published for the most recent period; (3) if the exporter is not a firm covered in this review, a previous review, or the original LTFV investigation, but the manufacturer is, the cash deposit rate will be the rate established for the most recent period for the manufacturer of the merchandise; and (4) if neither the exporter nor the manufacturer is a firm covered in this or any previous review conducted by the Department, the cash deposit rate will be 6.93 percent, the ''all others'' rate established in the LTFV investigation.

These deposit requirements, when imposed, shall remain in effect until publication of the final results of the next administrative review.

Interested parties may request disclosure within five days of the date of publication of this notice, and a hearing within 10 days of the date of publication. Any hearing requested will be held as early as convenient for parties but not later than 44 days after date of publication, or the first workday thereafter. Case briefs, or other written comments, from interested parties may be submitted not later than 30 days after the date of publication of this notice. Rebuttal briefs and rebuttal comments, limited to issues raised in the case briefs, may be filed not later than 37 days after the date of publication. The Department will publish the final results of review, including the results of its analysis of issues raised in any such written comments.

This notice serves as a preliminary reminder to importers of their responsibility under 19 CFR 353.26 to file a certificate regarding the reimbursement of antidumping duties prior to liquidation of the relevant entries during this review period. Failure to comply with this requirement could result in the Secretary's presumption that reimbursement of antidumping duties occurred and the subsequent assessment of double antidumping duties.

This notice also serves as a preliminary reminder to parties subject to administrative protective order (APO) of their responsibility concerning the disposition of proprietary information disclosed under APO in accordance with 19 CFR 353.34(d). Failure to comply with the regulations and the terms of the APO is a sanctionable violation.

This administrative review and notice are in accordance with section 751(a)(1) of the Tariff Act (19 U.S.C. 1675(a)(1)) and 19 CFR 353.22.

Dated: August 4, 1995.

Susan G. Esserman,

Assistant Secretary for Import Administration.

[FR Doc. 95–21432 Filed 8–28–95; 8:45 am]

BILLING CODE 3510–DS–M

[C–533–063]

Certain Iron-Metal Castings From India: Preliminary Results of Countervailing Duty Administrative Review

AGENCY: Import Administration, International Trade Administration, Department of Commerce.

ACTION: Notice of preliminary results of countervailing duty administrative review.

SUMMARY: The Department of Commerce (the Department) is conducting an administrative review of the countervailing duty order on certain iron-metal castings from India for the period January 1, 1992 through December 31, 1992. We preliminarily determine the net subsidy to be 12.93 percent *ad valorem* for Kajaria Iron Castings (Kajaria); 0.00 percent *ad valorem* for Dinesh Brothers, Pvt. Ltd. (Dinesh) and 3.54 percent *ad valorem* for all other companies. Interested parties are invited to comment on these preliminary results. Parties who submit comments in this proceeding are requested to submit with their comments (1) a statement of the issue and (2) a brief summary of their position.

EFFECTIVE DATE: August 29, 1995.

FOR FURTHER INFORMATION CONTACT: Elizabeth Graham or Kristin Mowry, Office of Countervailing Investigations, International Trade Administration, U.S. Department of Commerce, Washington, D.C. 20230; telephone: (202) 482–4105 and 482–3798.

SUPPLEMENTARY INFORMATION:

Background

On October 16, 1980, the Department published in the **Federal Register** (45 FR 68650) the countervailing duty order on certain iron-metal castings from India. On October 8, 1992, the Department published in the **Federal Register** a notice of ''Opportunity to Request an Administrative Review'' (57 FR 46371) of this countervailing duty order. On October 27, 1992, we received a timely request for review from the Municipal Castings Fair Trade Council and individually-named members (petitioners), all of which are interested parties.

We initiated the review, covering the period January 1, 1992 through December 31, 1992, on November 17, 1993 (58 FR 60600). The review covers 14 companies (11 exporters and three producers of the subject merchandise), which account for virtually all exports of the subject merchandise from India, and 12 programs.

Applicable Statute and Regulations

The Department is now conducting this administrative review in accordance with section 751(a) of the Tariff Act of 1930 as amended (the Act). Unless otherwise indicated, all citations to the statute and the Department's regulations are in reference to the provisions as they existed on December 31, 1994. However, references to the Department's *Countervailing Duties: Notice of Proposed Rulemaking and*

Request for Public Comments, 54 FR 23366 (May 31, 1989) (*Proposed Regulations*), are provided solely for further explanation of the Department's countervailing practice. Although the Department has withdrawn the particular rulemaking proceeding pursuant to which the *Proposed Regulations* were issued, the subject matter of these regulations is being considered in connection with an ongoing rulemaking proceeding which, among other things, is intended to conform the Department's regulations to the Uruguay Round Agreements Act. *See* 60 FR 80 (January 3, 1995).

Scope of Review

Imports covered by the review are shipments of Indian manhole covers and frames, clean-out covers and frames, and catch basin grates and frames. These articles are commonly called municipal or public works castings and are used for access or drainage for public utility, water, and sanitary systems. During the review period, such merchandise was classifiable under the *Harmonized Tariff Schedule* (HTS) item numbers 7325.10.0010 and 7325.10.0050. The HTS item numbers are provided for convenience and Customs purposes. The written description remains dispositive.

Calculation Methodology for Assessment and Deposit Purposes

Pursuant to *Ceramica Regiomontana, S.A.* v. *United States,* 853 F. Supp. 431 (CIT 1994), Commerce is required to calculate a country-wide CVD rate, *i.e.*, the all-other rate, by ''weight averaging the benefits received by all companies by their proportion of exports to the United States, inclusive of zero rate firms and *de minimis* firms.'' Therefore, we calculated the net subsidy on a country-wide basis by first calculating the subsidy rate for each company subject to the administrative review. We then weight-averaged the rate received by each company using as the weight its share of total Indian exports to the United States of subject merchandise, including all companies, even those with *de minimis* and zero rates. We then summed the individual companies' weight-averaged rates to determine the subsidy rate from all programs benefitting exports of subject merchandise to the United States.

Since the country-wide rate calculated using this methodology was above *de minimis,* as defined by 19 CFR § 355.7 (1994), we proceeded to the next step and examined the net subsidy rate calculated for each company to determine whether individual company rates differed significantly from the weighted-average country-wide rate, pursuant to 19 CFR § 355.22(d)(3). Two companies (Kajaria and Dinesh) received significantly different net subsidy rates during the review period pursuant to 19 CFR § 355.22(d)(3). These companies are treated separately for assessment and cash deposit purposes. All other companies are assigned the country-wide rate.

Analysis of Programs

I. Programs Conferring Subsidies

A. Pre-Shipment Export Financing

The Reserve Bank of India, through commercial banks, provides pre-shipment financing, or ''packing credit,'' to exporters. With these pre-shipment loans, exporters may purchase raw materials and packing materials based on presentation of a confirmed order or letter of credit. In general, the loans are granted for a period of up to 180 days.

In prior administrative reviews of this order, this program was determined to be countervailable because receipt of the loans under this program is contingent upon export performance and the interest rates were preferential. (*See e.g., Final Results of Countervailing Duty Administrative Review: Certain Iron-Metal Castings From India* (56 FR 41658; (August 22, 1991) (1987 *Indian Castings Final Results*); *Final Results of Countervailing Duty Administrative Review: Certain Iron-Metal Castings From India* (56 FR 52515; October 21, 1991) (1988 *Indian Castings Final Results*); and *Final Results of Countervailing Duty Administrative Review: Certain Iron-Metal Castings From India* (56 FR 52521; October 21, 1991) (1989 *Indian Castings Final Results*).) There has been no new information or evidence of changed circumstances in this review to warrant reconsideration of this program's countervailability. During the review period, the rate of interest charged on Pre-Shipment Export loans ranged from 13 to 15 percent, depending on the length and date of the loan.

In the case of a short-term loan provided by a government, the Department uses the average interest rate for an alternative source of short-term financing in the country in question as a benchmark. In determining this benchmark, the Department selects the predominant source of short-term financing in the country in question. (*See* section 355.44(3)(b)(i) of the *Proposed Regulations*).

The Government of India (GOI) classifies the companies under review as small-scale industry companies. Therefore, we used the small-scale industry short-term interest rate published in a Reserve Bank of India periodical, *Reserve Bank of India Annual Report 1992–93,* that was submitted by the GOI. This publication provided us with the actual short-term small-scale industry interest rate of 15 percent.

During the review period, 9 of the 14 respondent companies made payments on Pre-Shipment Export loans for shipments of subject castings to the United States.

To calculate the benefit from the pre-shipment loans to these nine companies, we compared the actual interest paid on these loans during the review period with the interest that would have been paid using the benchmark interest rate of 15 percent. If the benchmark rate exceeded the program rate, the difference between those amounts is the benefit. We then divided the benefit by either total exports or by total exports of the subject merchandise to the United States, depending on how the pre-shipment financing was reported. That is, if a company was able to segregate pre-shipment financing applicable to subject merchandise exported to the United States, we divided the benefit derived from only those loans by total exports of subject merchandise to the United States. If a firm was unable to segregate pre-shipment financing, we divided the benefit from all pre-shipment loans by total exports. On this basis, we preliminarily determine the net subsidy from this program to be 0.06 percent *ad valorem* for all manufacturers and exporters in India of certain iron-metal castings, except for Kajaria and Dinesh which have significantly different aggregate benefits. The net subsidy for Kajaria is 0.30 percent *ad valorem*. The net subsidy for Dinesh is 0.00 percent *ad valorem*.

2. Post-Shipment Export Financing

The Reserve Bank of India, through commercial banks, provides post-shipment loans to exporters upon presentation of export documents. Post-shipment financing also includes bank discounting of foreign customer receivables. In general, post-shipment loans are granted for a period of up to 180 days. The interest rate for post-shipment financing ranged from 12.5 to 24.75 percent during the review period.

In prior administrative reviews of this order, this program was determined to be countervailable because receipt of the loans under this program is contingent upon export performance and the interest rates were preferential. (*See* the 1988 and 1989 *Indian Castings Final*

Results.) There has been no new information or evidence of changed circumstances in this review to warrant reconsideration of this program's countervailability. For reasons stated above for pre-shipment financing, we are using 15 percent as our short-term interest rate benchmark for these loans.

On January 1, 1992, the GOI introduced a program entitled ''Scheme for Post-Shipment Credit Denominated in Foreign Currency'' (PSCFC). The loans are denominated in dollars and provided at interest rates at or above the London Interbank Offering Rate (LIBOR). Upon presentation of the export documents, the bank will credit the exporter's account in rupees for the loan amount less interest. The interest rate charged on these loans ranged from 6.5 percent to 8.5 percent during the review period.

Our normal practice is to use a foreign currency benchmark where loans are denominated in foreign currency. In this case, however, the Indian exporter borrowing under this program receives rupees. The loans are generally repaid in dollars when the customer makes payment. However, if the customer defaults, the exporter must repay the loan in rupees. Therefore, as explained more fully below, although the loans are tied to foreign exchange, foreign currency benchmarks are not appropriate.

Under these loans, the rupee equivalent of the amount of principal repaid will vary according to the exchange rate. This occurs because the principal remains constant in dollar terms, but as the dollar/rupee exchange rate varies, the amount of rupees necessary to repay the constant dollar amount varies. In this situation, the preferred benchmark would be the interest rate on alternative dollar-indexed loans in India. However, we have not been able to locate such a benchmark, and must, therefore, use as a benchmark a rupee-denominated interest rate. To make dollar-denominated post-shipment export financing rates comparable to the benchmark, we took account of the effect of movements in the rupee-dollar exchange rate over the loan period.

On March 1, 1992, the GOI introduced the Liberalised Exchange Rate Management System, whereby the rupee was made partly convertible. Under this system, 40 percent of all foreign exchange remitted was required to be exchanged at the official exchange rate and the remaining 60 percent at a market determined rate.

Because Indian exporters and banks use two exchange rates, we have used both of those rates (in the proportions, 40 percent at the official rate and 60 percent at the market rate) to calculate the amount of interest paid in rupees, adjusting for exchange rate fluctuations between the day of receipt and the day of repayment. We then compared the interest that would be paid on a benchmark rupee loan to the interest paid on the dollar-indexed loans. In this calculation, we have followed our consistent methodology of assuming that interest would be paid on the rupee loans at the time of repayment. (*See* section 355.48(b)(3) of the Proposed Regulations.)

During the review period, 11 of the 14 respondent companies made payments on post-shipment export loans for shipments of subject castings to the United States. One of these 11 companies, Serampore Industries Private Ltd. (Serampore), provided incomplete post-shipment loan information in its response to our questionnaire. We have requested Serampore provide the complete post-shipment loan information. Since we have not received the information in time for these preliminary results, in accordance with section 776(c) of the Act, we have assigned Serampore the highest subsidy rate for post-shipment loans calculated for another company in this review. We will use the information provided by Serampore in our final results of this review.

Also during the review period, the Reserve Bank of India refinanced banks' rupee post-shipment export credit at a rate of 11 percent per annum, while credit under the PSCFC scheme was refinanced at 5.5 percent per annum. Such refinancing practices encourage lending to the export sector; thus, driving down interest rates for exporters while driving up interest rates for domestic firms. Similar practices by other central banks of foreign governments have been considered to have been subsidizing their export sector, and thus found to be countervailable. However, we were unable to locate a reference to use as a benchmark for such refinancing practices. We will continue to search for such a benchmark, and invite interested parties to submit relevant information.

To calculate the *ad valorem* subsidy we divided the benefit by either total exports or exports of the subject merchandise to the United States, depending on whether the company was able to segregate the post-shipment financing on the basis of destination of the exported good. On this basis, we preliminarily determine the net subsidy from this program to be 0.43 percent *ad valorem* for all manufacturers and exporters in India of certain iron-metal castings, except for Kajaria and Dinesh which have significantly different aggregate benefits. The net subsidy for Kajaria is 0.15 percent *ad valorem*. The net subsidy for Dinesh is 0.00 percent *ad valorem*.

3. Income Tax Deductions Under Section 80HHC

Under section 80HHC of the Income Tax Act, the GOI allows exporters to deduct profits derived from the export of goods and merchandise from taxable income. In prior administrative reviews of this order, this program has been determined to be countervailable because receipt of benefits under this program is contingent upon export performance. (*See* the 1988 and 1989 *Indian Castings Final Results.*) There has been no new information or evidence of changed circumstances in this review to warrant reconsideration of this program's countervailability.

To calculate the benefit to each company, we subtracted the total amount of income tax the company actually paid during the review period from the amount of tax the company would have paid during the review period had it not claimed any deductions under section 80HHC. We then divided this difference by the value of the company's total exports. On this basis, we preliminarily determine the net subsidy from this program to be 2.97 percent *ad valorem* for all manufacturers and exporters in India of certain iron-metal castings, except for Kajaria and Dinesh which have significantly different aggregate benefits. The net subsidy for Kajaria is 12.39 percent *ad valorem*. The net subsidy for Dinesh is 0.00 percent *ad valorem*.

4. Import Mechanisms

The GOI allows companies to transfer certain types of import licenses to other companies in India. During the review period, castings manufacturers/exporters sold Additional Licenses, Replenishment Licenses, Exim Scrip Licenses, and Special Exim Licenses. However, exporters reported that the Replenishment Licenses and Exim Scrip Licenses they sold during the review period were for non-subject merchandise. The GOI reported that the Replenishment License Program was terminated for exports made after February 29, 1992. The Replenishment License Program was replaced by the Exim Scrip Program, which was itself terminated on March 1, 1992. On April 1, 1992, the Special Exim License Program was created to replace the Exim Scrip Program.

Additional licenses permit the exporter to import a variety of products

in an amount equal to ten percent of the ''net foreign exchange'' earned in the previous year. Imports under an additional license are subject to customs duties and there is no obligation to export the products incorporating the imported inputs.

Special Exim Licenses are issued to exporters based on their net foreign exchange earnings. Special Exim Licenses specify the products that may be imported using the license and the exporter is not required to incorporate the inputs into the products it exports.

Replenishment Licenses permit the replacement of imported inputs used in exported products. The types and amounts of products which can be imported under a Replenishment License are contingent upon the particular product exported. Exporters are required to pay import duties on the inputs imported under a Replenishment License, but the importer is not required to incorporate the inputs into the product it exports. Additionally, Replenishment Licenses may not be issued to exporters utilizing Advance Licenses to import inputs.

Exim Scrip Licenses are issued for 30 percent of the F.O.B. value of the exports. Import duties are payable on inputs imported under these licenses and like Replenishment Licenses, they may not be issued to exporters utilizing Advance Licenses to import inputs.

Because the companies received these licenses based on their status as exporters, we preliminarily determine that the sale of these licenses is countervailable. *See* the 1988 and 1989 *Indian Castings Final Results.* There has been no new information or evidence of changed circumstances in this review to warrant reconsideration of this program's countervailability.

Since companies receive Additional Licenses and Special Exim Licenses based on their total export earnings from the previous year, we calculated the subsidies by dividing the total amount of proceeds a company received from sales of Additional Licenses and Special Exim Licenses by the total value of its exports of all products to all markets.

Companies receive Replenishment Licenses and Exim Scrip Licenses based on individual export shipments. Since the Replenishment Licenses and Exim Scrip Licenses sold by exporters during the review period were for non-subject merchandise, we do not consider these sales to have benefitted exports of the subject merchandise.

We preliminarily determine the net subsidy from the sale of Additional and Special Exim Licenses to be 0.08 percent *ad valorem* for all manufacturers and exporters in India of certain iron-metal castings, except for Kajaria and Dinesh which have significantly different aggregate benefits. The net subsidy for Kajaria is 0.09 percent *ad valorem*. The net subsidy for Dinesh is 0.00 percent *ad valorem*.

II. Program Preliminary Found Not To Confer Subsidies Advance Licenses

The purpose of the advance license is to allow an importer to import raw materials used in the production of an exported product without first having to pay duty. Companies importing under advance licenses are obligated to export the products made using the duty-free imports.

During the review period, eight of the respondent castings manufacturers/exporters used advance licenses to import pig iron, an input which is physically incorporated into the subject iron-metal castings exported to the United States. Item (i) of the Illustrative List specifies that the remission or drawback of import duties levied on imported goods that are physically incorporated into an exported product is not a countervailable subsidy, if the remission or drawback is not excessive. We consider respondents' use of advance licenses to be the equivalent of a duty drawback scheme. That is, they used the licenses in order to import, net of duty, raw materials which were physically incorporated into the exported products. Since the amount of raw materials imported was not excessive vis-a-vis the products exported, we preliminarily determine that use of the advance licenses was not countervailable. *See* the 1988 and 1989 *Indian Castings Final Results,* and the *Final Affirmative Countervailing Duty Determination: Steel Wire Rope from India (Steel Wire Rope),* (56 FR 46293, September 11, 1991).

III. Programs Preliminarily Found Not To Be Used

We also examined the following programs and preliminarily determine that exporters of certain iron-metal castings did not apply for or receive benefits under these programs with respect to exports of the subject merchandise to the United States during the review period: (1) Market Development Assistance; (2) the International Price Reimbursement Scheme; (3) Falta Free Trade Zones and Other Free Trade Zones Program; (4) Preferential Freight Rates; (5) Preferential Diesel Fuel Program; and (6) 100 Percent Export-Oriented Units Program.

IV. Program Preliminarily Found To Be Terminated

During the 1990 review, we verified that the GOI terminated the CCS program effective July 3, 1991. (*See* the Verification of the Government of India (GOI) Questionnaire Responses for the 1990 Administrative Review of the Countervailing Duty Order on Certain Iron-Metal Castings from India (public version) dated December 13, 1993, located in the Central Records Unit, room B–099, Department of Commerce). However, exporters have two years in which to file applications for CCS rebates for exports made prior to July 3, 1991. We have found no evidence of any residual benefits during this review period. Therefore, we preliminarily determine that exporters of certain iron-metal castings did not apply for or receive benefits under this program with respect to exports of the subject merchandise to the United States during the review period.

Preliminary Results of Review

For the period January 1, 1992 through December 31, 1992, we preliminarily determine the net subsidy to be 12.93 *ad valorem* for Kajaria; 0.00 percent for Dinesh; and 3.54 percent *ad valorem* for all other companies. If the final results of this review remain the same as these preliminary results, the Department intends to instruct the U.S. Customs Service to assess the following countervailing duties at the above percentages of the f.o.b. invoice price on shipments of the subject merchandise exported on or after January 1, 1992, and on or before December 31, 1992. Because the total net subsidy for Dinesh Brothers Pvt., Ltd, is determined to be zero, we intend to instruct the Customs Service not to assess countervailing duties on shipments of the subject merchandise with respect to that company.

Parties to the proceeding may request disclosure of the calculation methodology and interested parties may request a hearing not later than 10 days after the date of publication of this notice. Interested parties may submit written arguments in case briefs on these preliminary results within 30 days of the day of publication. Rebuttal briefs, limited to arguments raised in case briefs, may be submitted seven days after the time limit for filing the case brief. Any hearing, if requested, will be held seven days after the scheduled date for submission of rebuttal briefs. Copies of case briefs and rebuttal briefs must be served on interested parties in accordance with 19 CFR § 355.38(e).

Representatives of parties to the proceeding may request disclosure of proprietary information under administrative protective order no later than ten days after the representative's client or employer becomes a party to the proceeding, but in no event later than the date the case briefs, under section 355.38(c)of the Department's regulations, are due. The Department will publish the final results of this administrative review, including the results of its analysis of issues raised in any case or rebuttal brief or at a hearing.

This administrative review and notice are in accordance with section 751(a)(1) of the Act (19 U.S.C. § 1675(a)(1)) and 19 CFR § 355.22.

Dated: August 18, 1995.

Susan G. Esserman,

Assistant Secretary for Import Administration.

[FR Doc. 95–21433 Filed 8–28–95; 8:45 am]

BILLING CODE 3510–DS–P

[C–533–063]

Certain Iron-Metal Castings From India: Final Results of Countervailing Duty Administrative Review

AGENCY: Import Administration, International Trade Administration, Department of Commerce.

ACTION: Notice of final results of countervailing duty administrative review.

SUMMARY: On January 24, 1995, the Department of Commerce (the Department) published in the **Federal Register** its preliminary results of administrative review of the countervailing duty order on Certain Iron-Metal Castings From India for the period January 1, 1991 to December 31, 1991. We have completed this review and determine the net subsidies to be 0.00 percent *ad valorem* for Dinesh Brothers, Pvt. Ltd., 41.75 percent for Super Castings (India) Pvt. Ltd., 16.14 percent for Kajaria Iron Castings Pvt. Ltd., and 5.53 percent *ad valorem* for all other companies. We will instruct the U.S. Customs Service to assess countervailing duties as indicated above.

EFFECTIVE DATE: August 29, 1995.

FOR FURTHER INFORMATION CONTACT: Robert Copyak and Alexander Braier, Office of Countervailing Compliance, Import Administration, International Trade Administration, U.S. Department of Commerce, 14th Street and Constitution Avenue, N.W., Washington, D.C. 20230; telephone: (202) 482–2786.

SUPPLEMENTARY INFORMATION:

Background

On January 24, 1995 the Department published in the **Federal Register** (60 FR 4596) the preliminary results of its administrative review of the countervailing duty order on Certain Iron-Metal Castings From India. The Department has now completed this administrative review in accordance with section 751 of the Tariff Act of 1930, as amended (the Act).

We invited interested parties to comment on the preliminary results. On February 23, 1995, case briefs were submitted by the Municipal Castings Fair Trade Council (MCFTC) (petitioners), and the Engineering Export Promotion Council of India (EEPC) and individually-named producers of the subject merchandise which exported iron-metal castings to the United States during the review period (respondents). On March 2, 1995, rebuttal briefs were submitted by the MCFTC and the EEPC. The comments addressed in this notice were presented in the case briefs.

The review covers the period January 1, 1991 through December 31, 1991. The review involves 14 companies and the following programs:

(1) Pre-shipment export financing
(2) Post-shipment export financing
(3) Income tax deductions under Section 80HHC
(4) Cash Compensatory Support (CCS) Program
(5) Sale of Import Licenses
(6) Advance Licenses
(7) Market Development Assistance
(8) International Price Reimbursement Scheme
(9) Free Trade Zones
(10) Preferential Freight Rates
(11) Preferential Diesel Fuel Program
(12) 100 Percent Export-Oriented Units Program

Applicable Statute and Regulations

The Department is conducting this administrative review in accordance with section 751(a) of the Tariff Act of 1930, as amended (the Act). Unless otherwise indicated, all citations to the statute and to the Department's regulations are in reference to the provisions as they existed on December 31, 1994. However, references to the Department's Countervailing Duties; Notice of Proposed Rulemaking and Request for Public Comments, 54 FR 23366 (May 31, 1989) (Proposed Rules), are provided solely for further explanation of the Department's countervailing duty practice. Although the Department has withdrawn the particular rulemaking proceeding pursuant to which the Proposed Rules were issued, the subject matter of these regulations is being considered in connection with an ongoing rulemaking proceeding which, among other things, is intended to conform the Department's regulations to the Uruguay Round Agreements Act. *See* 60 FR 80 (Jan. 3, 1995).

Scope of the Review

Imports covered by the review are shipments of Indian manhole covers and frames, clean-out covers and frames, and catch basin grates and frames. These articles are commonly called municipal or public works castings and are used for access or drainage for public utility, water, and sanitary systems. During the review period, such merchandise was classifiable under the Harmonized Tariff Schedule (HTS) item numbers 7325.10.0010 and 7325.10.0050. The HTS item numbers are provided for convenience and Customs purposes. The written description remains dispositive.

Calculation Methodology for Assessment and Cash Deposit Purposes

Pursuant to Ceramica Regiomontana, S.A. v. *United States*, 853 F. Supp. 431, 439 (CIT 1994), the Department is required to calculate a country-wide CVD rate, *i.e.*, the all-other rate, by ''weight averaging the benefits received by all companies by their proportion of exports to the United States, inclusive of zero rate firms and *de minimis* firms.'' Therefore, we first calculated a subsidy rate for each company subject to the administrative review. We then weight-averaged the rate received by each company using as the weight its share of total Indian exports to the United States of subject merchandise. We then summed the individual companies' weight-averaged rates to determine the subsidy rate from all programs benefitting exports of subject merchandise to the United States.

Since the country-wide rate calculated using this methodology was above *de minimis*, as defined by 19 CFR 355.7 (1994), we proceeded to the next step and examined the net subsidy rate calculated for each company to determine whether individual company rates differed significantly from the weighted-average country-wide rate, pursuant to 19 CFR 355.22(d)(3). Three companies (Dinesh Brothers, Pvt. Ltd., Super Castings (India) Pvt. Ltd., and Kajaria Iron Castings Pvt. Ltd.) received significantly different net subsidy rates during the review period pursuant to 19 CFR 355.22(d)(3). These companies are treated separately for assessment and cash deposit purposes. All other

companies are assigned the country-wide rate.

Analysis of Comments

Comment 1

Petitioners state that the Department improperly calculated the amount of countervailable benefit conferred by the Cash Compensatory Support (CCS) program. They state that the Department failed to follow its standard practice of calculating benefits from a program based upon the date the benefit is received rather than the date the benefit is earned. Petitioners argue that the Department only calculates benefits on an ''as earned'' basis when the benefit is earned on a shipment-by-shipment basis and the exact amount of the benefit is known at the time of export. Petitioners claim that the CCS program does not meet this exception because the exact amount of benefits to be received under the CCS program is not known at the time of export.

Respondents state that petitioners are incorrect. Respondents claim that the exporter knew at the time of shipment the amount of rebate he or she would receive under the CCS program.

Department's Position

CCS rebates are paid upon export and are calculated as a percentage of the f.o.b. invoice price. Thus, these rebates are earned on a shipment-by-shipment basis, and the exact amount of the rebate is known at the time of export. Therefore, the Department calculated the benefit from the CCS program on an ''as earned'' basis based upon the date of export, consistent with our long-standing practice and in conformity with the Proposed Rules. Section 355.48(b)(7) of the Proposed Rules provides that, in cases of an export benefit provided as a percentage of the value of the exported merchandise (such as a cash payment or an over-rebate of indirect taxes), the timing of the receipt of countervailable benefits will be the date of export. See, *e.g.*, Certain Textile Mill Products and Apparel From Colombia, 52 FR 13272 (April 22, 1987), Cotton Shop Towels From Pakistan, 53 FR 34340 (September 6, 1988), and Certain Textile Mill Products From Thailand, 52 FR 7636 (March 12, 1987).

Petitioners argue that the benefits from the CCS program should not be calculated in this manner because it was not clear at the time of export whether the exporter would receive the full amount of the CCS rebate. They base this argument on (1) the fact that, in the official publication in which the Government of India established the CCS rates, it reserved the right to withdraw or alter the rebates, and (2) the fact that the CCS rebate percentages would be reduced if the exporter waited six months or after the date of export or longer to submit the application for the rebates. However, the fact that a government may reserve the right to alter or terminate a program does not affect the timing of the receipt of benefits, or whether the exporter knew the amount of benefits he or she would receive. Indeed, one of the criteria used by the Department to determine whether a program which rebates indirect taxes is countervailable is whether the government periodically reviews and revises the rebate level based on changes in the indirect tax incidence incurred by the exporter. See, e.g., Leather Wearing Apparel From Argentina 59 FR 25611 (May 17, 1994).

Under the CCS program, exporters knew at the time of export that they would receive the full amount of the CCS rebate if they submitted their applications within six months of the date of export. Therefore, petitioners second point also does not merit a change in our long-standing policy of calculating the benefit from the overrebate of indirect taxes based on the date of export of the merchandise.

Comment 2

Petitioners claim that the Department improperly set the cash deposit rate for the CCS program at zero. Petitioners state that the Department may only adjust the cash deposit rate if there has been a program-wide change as defined under section 355.50 of the Department's Proposed Rules. Petitioners claim that the CCS program does not qualify for an adjusted cash deposit rate under section 355.50 because the Government of India has only provided the Department with a copy of an ambiguous announcement of a suspension of the CCS program. They state that the announcement by India's Ministry of Commerce does not constitute an ''official act, such as the enactment of a statute, regulation, or decree'' as required by section 355.50 of the Department's regulations. Petitioners further state that the CCS program has only been suspended, not terminated. Petitioners state that, in Certain Fresh Cut Flowers from Ecuador, 52 FR 1361 (January 13, 1987), the Department determined that an indefinitely-suspended program implied the reinstatement of the program was possible and therefore refused to consider the indefinite suspension a program-wide change.

Respondents argue that the method of termination was as official as necessary under the Indian system of government. They state that the Department verified that the program was terminated and that no claims for benefits under the program were made by castings exporters after the termination date. Respondents further state that the Department verified that there were no outstanding residual benefits under the CCS program. Therefore, respondents conclude that the Department should maintain the CCS deposit rate at zero.

Department's Position

Section 355.50(a) of the Proposed Rules states that the Department may adjust the cash deposit rate when (1) there has been a program-wide change which occurred prior to the Department's preliminary results of review and (2) the Department is able to measure the change in the amount of countervailable subsidies provided under the program in question. In addition, § 355.50(b)(2) states that the change in the program must be effectuated by an official act, such as the enactment of a statute, regulation, or decree, or contained in the schedule of an existing statute, regulation, or decree. India's Ministry of Commerce terminated the CCS program as of July 3, 1991. Therefore, there was a program-wide change in the CCS program which (1) occurred prior to the January 24, 1995 preliminary results of review and (2) resulted in a change in the amount of countervailable subsidies that the Department was able to measure. This program-wide change was effectuated by an official government announcement which satisfies the requirements of § 355.50(b)(2).

We agree with petitioners that it is our practice not to adjust the cash deposit rate for programs which are suspended rather than terminated. However, we disagree with petitioners' assertion that the CCS program is only suspended. While the India Ministry of Commerce announcement terminating the program refers to the program as being suspended, the conclusion of the notice states that the program has been terminated. See the December 13, 1993 verification report entitled Verification of the Government of India (GOI) Questionnaire Response for the 1990 Countervailing Duty Order on Certain Iron-metal Castings from India. As the verification report explains, officials from the Government of India confirmed that the CCS program is terminated. Therefore, we have determined that the CCS program has been terminated.

Furthermore, § 355.50(d) states that the Department will only adjust the cash deposit rates for terminated programs if it determines that residual benefits will not be bestowed under the terminated

program. As stated in the Preliminary Results of this review, to ascertain whether castings exporters received any residual benefits from this terminated program, we reviewed the exporters accounting ledgers through September 1993 (which was the time of our verification for the 1990 administrative review and over two years after the effective termination of the CCS program which was July 3, 1991). Based upon this examination, we found no evidence of any application for or receipt of residual benefits under the CCS program.

Therefore, we confirm the decision made in the Preliminary Results that the cash deposit rate be adjusted to zero for the CCS program.

Comment 3

Petitioners argue that, to the extent that any respondent received CCS payments on non-subject castings, the Department should calculate and countervail the value of CCS payments on non-subject castings in these administrative reviews. They state that the Department's failure to countervail subsidies on non-subject castings exports is at odds with the language and intent of the countervailing duty law, which applies to any subsidy whether bestowed ''directly or indirectly.'' They argue that subsidies conferred on non-subject castings should be countervailed because these subsidies provide indirect benefits on exports of the subject castings.

Respondents state that petitioners have misapplied the term ''indirectly.'' They state that the CCS paid on other merchandise is not ''indirectly'' paid on subject castings merely because it is paid to the same producer. Respondents argue that there is no benefit—either direct or indirect—to the subject merchandise when benefits are paid on other products. Respondents state that petitioners are putting forth the old ''money is fungible'' argument, which has never been accepted by the Department. They state the Department should not do so now.

Department's Position

Section 771(5)(A)(ii) of the Act states that subsidies can be ''paid or bestowed directly or indirectly on the manufacture, production, or export of any class or kind of merchandise''. However, petitioners have misinterpreted the term ''indirect subsidy.'' They argue that a subsidy tied to the export of product B may provide an indirect subsidy to product A, or that a reimbursement of costs incurred in the manufacture of product B may provide an indirect subsidy upon the manufacture of product A. As such, they argue that grants that are tied to the production or export of product B, should also be countervailed as a benefit upon the production or export of product A. This is at odds with established Department practice with respect to the treatment of subsidies, including indirect subsidies. The term ''indirect subsidies'' as used by the Department refers to the manner of delivery of the benefit which is conferred upon the merchandise subject to an investigation or review. The term, as used by the Department, does not imply that a benefit tied to one type of product also provides an indirect subsidy to another product. This kind of interpretation proposed by petitioners is clearly not within the purview or intent of the statutory language under section 771(5)(B)(ii).

In our Proposed Rules, we have clearly spelled out the Department's practice with respect to this issue. ''Where the Secretary determines that a countervailable benefit is tied to the production or sale of a particular product or products, the Secretary will allocate the benefit solely to that product or products. If the Secretary determines that a countervailable benefit is tied to a product other than the merchandise, the Secretary will not find a countervailable subsidy on the merchandise.'' Section 355.47(a). This practice of tying benefits to specific products is an established tenet of the Department's administration of the countervailing duty law. See, e.g., Industrial Nitrocellulose from France, 52 FR 833 (January 9, 1987); Apparel from Thailand, 50 FR 9818 (March 12, 1985); and Extruded Rubber Thread from Malaysia, 60 FR 17515 (April 9, 1995).

Comment 4

Respondents argue that the CCS program does not provide an over-rebate of indirect taxes. They argue that the charges paid to the Indian port authority on imported pig iron are taxes paid to the Government of India and contend that, while the port charges are labeled as ''wharfage, berthage, pilotage, and towage,'' these charges are more in the nature of taxes since they are not tied to the real cost of these services. Accordingly, respondents state that the Department should reconsider its finding that these charges are service charges rather than taxes and therefore are not eligible for rebate under the CCS program. In addition, they argue that, even if the CCS payments may have been over-rebated, the Department has miscalculated the over-rebate by disallowing respondents' claim that ''port dues'' be treated as an indirect tax. Respondents state that dues are not fees for services and therefore should have been allowed as offsets to the CCS.

Petitioners claim that information provided by respondents themselves reveals that the port and harbor ''taxes'' rebated under the CCS program are not indirect taxes but are charges for services. They state that respondents' position is based upon the claim that payment for these charges is made to the Calcutta Port Trust, an alleged entity of the Government of India. Petitioners state that a payment made to a government does not inherently mean that the payment is a tax. The type of port charges under discussion in the CCS program are similar to the user fees charged by the U.S. government. User fees are charged by the government to help defray the government's cost of providing a service to the public, and are not regarded as taxes under U.S. law.

Department's Position

The CCS program was established to provide a rebate of indirect taxes incurred on items physically incorporated into an exported product. Items (h) and (i) of the Illustrative List of Export Subsidies permits the non-excessive rebate of indirect taxes and import charges paid on items physically incorporated into an export product. However, the Items (h) and (i) do not permit the rebate of service charges on such items.

During the verification of the 1990 administrative review, we examined information which showed that the port charges claimed by the exporters to be indirect taxes were, in fact, service charges. The documentation gathered at verification indicates that the item claimed as port charges included berthage, port dues, pilotage, and towage charges. See the February 25, 1994 report titled Verification of Information Submitted by RSI India Pvt. Ltd. for the 1990 Administrative Review of the Countervailing Duty Order on Certain Iron-Metal Castings from India which is on file in the Central Records Unit (room B009 of the Main Commerce Building). Because this was verified at the company level, we afforded the Government of India the opportunity to provide information to demonstrate that the port and harbor collections were actually indirect taxes rather than charges for services. The information provided by the Government of India did not demonstrate that these charges, which were used in the calculation of the indirect tax incidence, were indirect taxes or import charges that are allowable under item (h) or (i) of the

Illustrative List of Export Subsidies. Therefore, we determined that the charges in question were service charges rather than import charges. As such, we disallowed these items in the calculation of the indirect tax incidence on items physically incorporated in the manufacture of castings under the CCS program. For further discussion of this analysis, see the May 26, 1994 briefing paper titled Cash Compensatory Support (CCS) Program which is on file in the Central Records Unit (room B009 of the Main Commerce Building).

Comment 5

Petitioners claim that the Department understated the benefit to Carnation Enterprise from the CCS program in the 1991 administrative review. They state that the Department relied upon Carnation's claim that it was eligible for only a two percent CCS rebate in calculating its benefit from the CCS program because the company imported more than 80 percent of their pig iron. Petitioners state that information in Carnation's questionnaire indicates that the company understated its CCS rebate. Furthermore, petitioners contend that during the verification of Carnation's response for the 1990 review, the Department confirmed that all claims filed by Carnation for CCS benefits for subject castings were for rebates of five percent. Therefore, they argue that in its final analysis the Department should recalculate the benefits to Carnation under the CCS program based on a rebate rate of five percent.

Respondents state that petitioners' claim is based on the fact that (1) Carnation's financial statement shows less than 80 percent utilization of pig iron and (2) that the financial statements show that CCS receipts are greater than five percent of export sales. Respondents state that percentages of utilization of pig iron from year to year do not necessarily mean that less than (or more than) a certain amount was imported. Carry over of inventories will also affect the calculated ratios. In addition, the amount of CCS rebates paid on non-subject merchandise is greater than five percent. Therefore, the fact that the financial statement shows more than five percent CCS in terms of sales does not negate the fact that only two percent was received on subject castings.

Department's Position

In its response to the questionnaire in the 1991 administrative review, Carnation specifically stated that the CCS rebate in effect for its exports of the subject castings was only two percent. The company stated that because it imported more than 80 percent of its pig iron during this period it was only eligible for a two percent CCS rebate. In addition, the company also stated that it did not use the CCS program after February 1, 1991. There is no information on the record which contradicts that statement. Therefore, the benefit calculated for Carnation in the 1991 administrative review for the CCS program was based on a two percent rebate.

Comment 6

Petitioners state that the Department improperly failed to countervail the value of advance licenses, because advance licenses are simply export subsidies and not the equivalent of a duty drawback program. Petitioners claim that the advance license program does not meet the criteria of a duty drawback system which would be permissible in light of Item (i) of the Illustrative List of Export Subsidies, annexed to the General Agreement on Tariffs and Trade (GATT) Subsidies Code (Illustrative List). They base this claim on the fact that (1) the advance licenses were not limited to use just for importing duty-free input materials because the licenses could be sold to other companies; (2) eligibility for drawback is always contingent upon the claimant demonstrating that the amount of input material contained in an export is equal to the amount of such material imported, which the respondents failed to do; and (3) the Government of India made no attempt to determine the amount of material that was physically incorporated (making normal allowances for waste) in the exported product as required under Item (i). For these reasons, petitioners state that the Department should countervail in full the value of advance licenses received by respondents during the period of review.

Respondents state that advance licenses allow importation of raw materials duty free for the purposes of producing export products. They state that if Indian exporters did not have advance licenses, the exporters would import the raw materials, pay duty, and then receive drawback upon export. Respondents argue that, although advance licenses are slightly different from a duty drawback system because they allow imports duty free rather than provide for remittance of duty upon exportation, this does not make them countervailable. Respondents also state that no advance licenses were sold.

Department's Position

Petitioners have only pointed out the administrative differences between a duty drawback system and the advance license scheme used by Indian exporters. Such administrative differences can also be found between a duty drawback system and an export trade zone or a bonded warehouse. Each of these systems has the same function: each exists so that exporters may import raw materials to be incorporated into an exported product without the assessment of import duties.

The purpose of the advance license is to allow an importer to import raw materials used in the production of an exported product without first having to pay duty. Companies importing under advance licenses are obligated to export the products made using the duty-free imports. Item (i) of the Illustrative List specifies that the remission or drawback of import duties levied on imported goods that are physically incorporated into an exported product is not a countervailable subsidy, if the remission or drawback is not excessive. We determined that respondents used advance licenses in a way that is equivalent to how a duty drawback scheme would work. That is, they used the licenses in order to import, net of duty, raw materials which were physically incorporated into the exported products. Since the amount of raw materials imported was not excessive vis-a-vis to the products exported, we determine that use of the advance licenses was not countervailable.

Comment 7

Petitioners claim that the Department understated the benchmark interest rate used to calculate the benefits for pre-shipment and post-shipment loans. They state that, rather than using the interest rate obtained from commercial banks during verification or the average lending rates published by the International Market Fund (IMF), the Department used the average interest rates published by the Reserve Bank of India (RBI) for small-scale industry loans to calculate the benchmark. Petitioners claim that these were regulated and preferential small-scale industry rates which were used to calculate average benchmark interest rates. As such, the Department merely compared interest rates for one type of preferential loan to interest rates for another type of preferential loan.

Respondents state that the RBI rates used by the Department are the commercial rates available in India. Therefore, it is those rates which should be used as the benchmark.

Department's Position

We have used the average interest rates for loans to small-scale industries as published by the RBI as the benchmark for the administrative reviews of this order. (See, e.g., the 1988 and 1989 Final Results of Countervailing Duty Administrative Review: Certain Iron Metal Castings from India, 56 FR 52515 and 56 FR 52521; October 21, 1991.)

It is the Department's long-standing policy that a program is not specific under the countervailing duty law solely because it is limited to small firms or to small- and medium-sized firms. See, e.g., § 355.43(b)(7) of the Proposed Rules, and Textile Mill Products and Apparel from Singapore, 50 FR 9840 (March 12, 1985). Therefore, interest rates which are set for a loan program provided to small-size firms and industries can be used as an appropriate benchmark. (See, e.g., the discussion of the benchmark used in the FOGAIN program in Bricks From Mexico, 49 FR 19564 (May 8, 1984).) Because the castings exporters qualify as small-scale industry firms, we have used the interest rates set under this program as our benchmark.

Comment 8

Petitioners argue that the Department has improperly failed to countervail IPRS benefits bestowed on non-subject castings. They state that the Department's failure to countervail such subsidies is at odds with the language and intent of the countervailing duty law, which applies to any bounty or grant whether bestowed directly or indirectly. In addition, because eligibility for IPRS payments is based on the use of domestic pig iron, and pig iron is fungible, castings exporters can easily avoid paying countervailable duties by making no claims for IPRS payments on the subject castings but rather make all such claims on non-subject castings. Therefore, if a castings exporter used approximately equal amounts of pig iron and scrap to manufacture its castings, it could receive IPRS payments for all of the pig iron it consumed by claiming that 100 percent of its pig iron was used to produce non-subject castings. Thus, petitioners state that, although IPRS claims would only be for exports of non-subject castings, the IPRS payments would reimburse the producer for the cost of pig iron actually consumed to manufacture subject castings as well as non-subject castings.

Department's Position

Our response to petitioners' argument that International Price Reimbursement Scheme (IPRS) rebates received on non-subject exports provides an indirect benefit to exports of the subject merchandise can be found in the *Department's Position* for *Comment 3* above. We find no merit in petitioners' claim that the castings exporters can avoid paying countervailing duties by shifting their claims for IPRS payments from subject to non-subject castings. When claims are filed for IPRS payments, the amount of the rebate determined by the Government of India is based on the contention that 100 percent of the material used in the production of the exported good is domestic pig iron. This being the case, it is impossible to shift the claims from subject to non-subject merchandise because the IPRS payments are based upon 100 percent use of domestic pig iron regardless of the actual content of domestic pig iron, imported pig iron, or scrap used in the production of the exported good. In addition, at the point in time when the companies submitted their IPRS claims covering the period of this administrative review, the Department's policy was to countervail the full amount of IPRS rebates. Therefore, there was no incentive for the castings exporters to shift their domestic pig iron claims from subject to non-subject castings.

Comment 9

Petitioners state that under § 355.44 of the *Proposed Rules,* the Department defines a countervailable benefit as the full or partial exemption, remission, or deferral of a direct tax or social welfare charge in excess of the tax the firm otherwise would pay absent a government program. They state that, under the regulations, to examine the taxes the firm otherwise would have paid, the Department will take into account the firm's total tax liability as a result of a firm's use of a tax subsidy. Therefore, petitioners argue that the Department's approach to the treatment of tax subsidies should likewise apply to the receipt of the IPRS subsidies on non-subject castings, in that both types of subsidies reduce a firm's total costs whether it be in the form of taxes or the cost of pig iron inputs.

Respondents state that petitioners' argument is misplaced. They state that the IPRS is not remotely like a tax program. Furthermore, respondents claim that the IPRS received on non-subject merchandise does not benefit other merchandise the way a tax reduction might benefit all production.

Department's Position

Section 355.44(i)(1) of the Proposed Rules states that the countervailable benefit conferred by a tax program is the amount of taxes a company otherwise would have paid absent the use of the program. To determine that amount, the Department must examine the company's total tax liability and the effect of the tax program on that liability, as there are numerous variables which affect that liability. For example, if a tax program allows an exporter a tax deduction based on the value of 20 percent of its export sales, this does not necessarily mean that there is a benefit from this program. If the company has a net loss for the year before taking any tax deductions, then there is no benefit in the period of review provided from this tax program. With or without the use of this tax program, the company's tax liability is still zero.

The methodology the Government of India used to determine the amount of the benefit conferred by a tax program has no effect on how the Department determines whether a grant received by a company provides a countervailable benefit to the subject merchandise. Grants that are tied to the production or export of only non-subject merchandise do not provide a countervailable benefit to the subject merchandise. As stated in our response to Comment 3, the allocation of countervailable benefits conferred upon a specific product or market is clearly detailed in § 355.47 of the Proposed Rules. This allocation methodology applies equally to grants as it does to tax programs. Although to determine the benefit from an export tax program, the Department must examine whether the tax program changes the company's total tax liability, as explained above, the Department will allocate any benefit found from the use of that export tax program only over the company's export sales, not the company's total sales. See, e.g. Extruded Rubber Thread from Malaysia. It is for these reasons that we have determined that IPRS rebates provided upon non-subject merchandise do not provide a benefit to the subject castings exported to the United States.

Comment 10

Petitioners state that the Department should countervail benefits provided to castings exporters through exchange rate schemes. A verification report for the 1990 administrative review explains that, previously, companies converted dollars to rupees at exchange rates no higher than 25 rupees per dollar, but, under a new scheme, the RBI allowed companies to convert 40 percent of their

dollars at this rate and remaining 60 percent of their dollars at a rate of 30 rupees per dollar. See the December 13, 1993 verification report entitled Meetings with Commercial Banks for the 1990 Administrative Review of the Countervailing Duty Order on Certain Iron-metal Castings from India. Petitioners state that this program is targeted to certain export markets because it provides benefits for export earnings in U.S. dollars.

Respondents state that this allegation of a new subsidy is well beyond the deadline established under 19 CFR 355.31(c)(1)(ii). They also state that there is nothing in the record to suggest that this is a subsidy. Respondents contend that it appears that the program merely allows exporters to convert some of their dollars at the commercial rate, rather than the controlled rate. Furthermore, they state that there is no information in the record that respondents used this program. Respondents also claim that the fact the program refers to the conversion of dollars into rupees is not an indication of targeting because the U.S. dollar is the currency of international commerce.

Department's Position

The time limits for making allegations of a new subsidy in an administrative review are established under 19 CFR 355.31(c)(1)(ii). The allegation made by petitioner is untimely under the regulations and must be rejected. Further, this alleged subsidy program was not in place during the period of the administrative review. Rather, it was instituted in March 1992. See the Reserve Bank of India Annual Report 1993–94 (page 22) which is on file in the Central Records Unit (room B009 of the Main Commerce Building).

Comment 11

Respondents state that countervailing the CCS payments and the income tax deductions under section 80HHC of the Income Tax Act double counts the subsidy from the CCS program. They argue that, under section 80HHC, payments received under the CCS program are considered export income which may be deducted from taxable income to determine the tax payable by the exporter. Therefore, respondents argue that, since CCS payments are also part of the deductions under 80HHC, to countervail the payments and then the deduction is to double count the CCS benefit. In addition, respondent's state that, just as the CCS payments form a component of profit for purposes of the 80HHC tax deduction, so do the payments received by respondents under the IPRS program. They argue that since IPRS rebates are no longer paid on subject castings exported to the United States, the deduction by respondents of IPRS rebates from income for 80HHC purposes is not a countervailable subsidy benefitting subject castings exported to the United States.

Petitioners claim that there is no double-counting of benefits because respondents first benefit from the excessive rebates under the CCS program, and also benefited again because the 80HHC program eliminated the need to pay taxes on the income from those rebates. Regarding respondents' comment on IPRS, petitioners state that respondents have argued for many years that IPRS payments merely represent the difference between the cost of domestic pig iron and the international price for pig iron. Therefore, petitioners conclude that because IPRS payments are not profit, they do not represent a benefit under 80HHC, and there is no reason to factor out the IPRS payments when calculating the subsidy from the 80HHC tax program.

Department's Position

Under section 80HHC of the Income Tax Act, the Government of India allows exporters to deduct from taxable income profits derived from the export of goods and merchandise. The benefit conferred by this program is the amount of taxes that would have been paid by the castings exporters absent this program. Therefore, the full amount of the tax savings realized by castings exporters from this exemption under the 80HHC program is countervailable.

Respondents' argument that we should adjust the benefit of the 80HHC tax program to account for CCS and IPRS rebates is at odds with the language and intent of the statute. The only permissible offsets to a countervailable subsidy are those provided under section 771(6) of the Act. The Department has consistently interpreted this provision of the statute as the exclusive source of permissible offsets. Such offsets include application fees paid to attain the subsidy, losses in the value of the subsidy resulting from deferred receipt, and export taxes specifically intended to offset the subsidy received. Adjustments which do not strictly fit the descriptions under section 771(6) are disallowed. (See, e.g., Textile Mill Products From Mexico, 50 FR 10824 (March 18, 1985).) Adjusting the benefit conferred by the 80HHC tax program to account for the CCS and IPRS rebates is not a permissible offset under section 771(6) of the Act. In addition, we also note that, with respect to respondents' CCS argument, that it is the Department's established policy to disregard the secondary tax effects of countervailable subsidies. See , e.g., Certain Fresh Atlantic Groundfish From Canada, 51 FR 10041 (March 24, 1986) and Fresh and Chilled Atlantic Salmon From Norway, 56 FR 7678 (February 25, 1991).

Comment 12

Respondents claim the subsidy calculated for Commex under the 80HHC tax program is over-stated because the Department used the tax rate for corporations to calculate the tax amount Commex would have paid without the tax deduction provided by this program. They claim that Commex is a partnership, not a corporation. Therefore, respondents state that the Department should correct this error and use the tax rate for partnerships to calculate the subsidy provided to Commex under the 80HHC tax program in the 1991 administrative review.

Department's Position

For the preliminary results of the 1991 administrative review, the income tax rate for corporations was used to calculate the benefit provided to Commex under the 80HHC tax program. A review of the record shows that Commex is a registered partnership. Therefore, we have recalculated the benefit provided to Commex under the 80HHC tax program using the tax rates applicable to a registered partnership firm. This recalculation changed the *ad valorem* subsidy for this program from 1.22 percent to 0.39 percent. In addition, this recalculation also resulted in a change to the country-wide all-other rate and to the country-wide all-other cash deposit rate for the 1991 administrative review. The country wide rate changed from 5.54 to 5.53 percent *ad valorem* and the country-wide cash deposit rate changed from 3.06 to 3.05 percent *ad valorem*.

Comment 13

Respondents state that it is not appropriate to include company rates that are based on best information available (BIA) in the calculation of the country-wide rate. Respondents also state that the inclusion in the country-wide rate of companies' rates which are ''significantly'' higher than the country-wide rate is improper when those companies are also given their own separate company-specific rates. See 19 CFR 355.22(d)(3) for explanation about the calculation of individual, ''significantly different'' rates. Respondents argue that *Ceramica Regiomontana, S.A.* v. *United States,*

853 F. Supp. 431 (CIT 1994) does not require the Department to include ''significantly'' higher rates in calculation of the country-wide rate. They state that a careful reading of that case, as well as *Ipsco Inc.* v. *United States,* 899 F. 2d 1192 (Fed. Cir. 1990), demonstrates that the courts in both cases were only concerned about the over-statement of rates owing to elimination of *de minimis* or zero margins from the country-wide rate calculation. Respondents claim that every company's rate is being pulled up to a percentage greater than it should be because the Department has included in the weighted-average country-wide rate the rates of companies which received their own ''significantly'' higher company-specific rates. Thus, they state that the country-wide rate is excessive for every company to which it applies. Respondents state that, not only is it unfair to charge this excessive countervailing duty, it is also contrary to law, in conflict with the international obligations of the United States, and violative of due process.

Petitioners state that respondents have misread *Ceramica* and *Ipsco.* They state that the plain language of *Ceramica* requires the Department to calculate a country-wide rate by weight averaging the benefits received by all companies by their proportion of exports to the United States. Petitioners state that while *Ceramica* and *Ipsco* dealt factually with the circumstances in which respondent companies had lower-than-average rates, the principle on which these cases is based applies equally to instances in which some companies have higher-than-average rates. They state that the courts have determined that the benefits received by all companies under review are to be weight-averaged in the calculation of the country-wide rate. Therefore, petitioners conclude that the Department followed the clear directives from the court.

Department's Position

We disagree with respondents that ''significantly different'' higher rate (including BIA rates) should not be included in the calculation in the calculation of the CVD country-wide rate. Respondents' reliance on *Ceramica* and *Ipsco* is misplaced. In those cases, the Department excluded the zero and *de minimis* company-specific rates that were calculated before calculating the country-wide rate. The court in *Ceramica,* however, rejected this calculation methodology. Based upon the Federal Circuit's opinion in *Ipsco,* the court held that the Department is required to calculate a country-wide CVD rate applicable to non-*de minimis* firms by ''weight averaging the benefits received by all companies by their proportion of exports to the United States, inclusive of zero rate firms and *de minimis* firms.'' *Ceramica,* 853 F. Supp. at 439 (emphasis on ''all'' added).

Thus, the court held that the rates of *all* firms must be taken into account in determining the country-wide rate. As a result of *Ceramica,* Commerce no longer calculates, as it formerly did, an ''all others'' country-wide rate. Instead, it now calculates a single country-wide rate at the outset, and then determines, based on that rate, which of the company-specific rates are ''significantly'' different.

Given that the courts in both *Ipsco* and *Ceramica* state that the Department should include all company rates, both *de minimis* and non *de minimis,* there is no legal basis for excluding ''significantly different'' higher rates, including BIA rates. To exclude these higher rates, while at the same time including zero and *de minimis* rates, would result in a similar type of country-wide rates bias of which the courts were critical when the Department excluded zero and *de minimis* rates under its former calculation methodology.

Final Results of Review

For the period January 1, 1991 through December 31, 1991, we determine the net subsidies to be 0.00 percent *ad valorem* for Dinesh Brothers, Pvt. Ltd., 41.75 percent for Super Castings (India) Pvt. Ltd. , 16.14 percent for Kajaria Iron Castings Pvt. Ltd., and 5.53 percent *ad valorem* for all other companies.

The Department will instruct the U.S. Customs Service to assess the following countervailing duties:

Manufacturer/Exporter	Rate (percent)
Dinesh Brothers, Pvt. Ltd.	0.00
Super Castings (India) Pvt. Ltd.	41.75
Kajaria Iron Castings Pvt. Ltd. .	16.14
All Other Companies	5.53

The Department will also instruct the U.S. Customs Service to collect a cash deposit of estimated countervailing duties of 5.12 percent of the f.o.b. invoice price on all shipments of the subject merchandise entered, or withdrawn from warehouse, for consumption on or after the date of publication of the final results of this review from all companies except Super Castings (India) Pvt. Ltd., Kajaria Iron Castings Pvt. Ltd. and Dinesh Brothers, Pvt. Ltd.. Because Super Castings and Kajaria did not use the CCS program, the cash deposit rates for those companies will equal the calculated net subsidies of 41.75 percent and 16.14 percent, respectively. Because the net subsidy for Dinesh Brothers Pvt., Ltd. is zero, the Department will instruct the Customs Service not to collect cash deposits on shipments of this merchandise from this company entered or withdrawn for consumption on or after the date of publication of the final results of this administrative review.

This notice serves as the only reminder to parties subject to APO of their responsibilities concerning the return or destruction of proprietary information disclosed under APO in accordance with 19 CFR 353.34(d). Failure to comply is a violation of the APO.

This administrative review and notice are in accordance with section 751(a)(1) of the Act (19 U.S.C. 1675(a)(1)) and 19 CFR 355.22.

Dated: August 17, 1995.

Susan G. Esserman,

Assistant Secretary for Import Administration.

[FR Doc. 95–21436 Filed 8–28–95; 8:45 am]

BILLING CODE 3510–DS–P

[C–533–063]

Certain Iron-Metal Castings From India: Final Results of Countervailing Duty Administrative Review

AGENCY: Import Administration, International Trade Administration, Department of Commerce.

ACTION: Notice of final results of Countervailing Duty Administrative Review.

SUMMARY: On January 24, 1995, the Department of Commerce (the Department) published in the **Federal Register** its preliminary results of administrative review of the countervailing duty order on Certain Iron-Metal Castings From India for the period January 1, 1990 to December 31, 1990. We have completed this review and determine the net subsidies to be 4.29 percent *ad valorem* for Nandikeshwari, Pvt. Ltd., 18.52 percent for Overseas Steel, Pvt. Ltd., 22.32 percent for Sitaram Steel, Pvt. Ltd., and 10.16 percent *ad valorem* for all other companies. We will instruct the U.S. Customs Service to assess countervailing duties as indicated above.

EFFECTIVE DATE: August 29, 1995.

FOR FURTHER INFORMATION CONTACT: Robert Copyak and Alexander Braier, Office of Countervailing Compliance, Import Administration, International

Trade Administration, U.S. Department of Commerce, 14th Street and Constitution Avenue, N.W., Washington, D.C. 20230; telephone: (202) 482–2786.

SUPPLEMENTARY INFORMATION:

Background

On January 24, 1995 the Department published in the **Federal Register** (60 FR 4592) the preliminary results of its administrative review of the countervailing duty order on Certain Iron-Metal Castings From India. The Department has now completed this administrative review in accordance with section 751 of the Tariff Act of 1930, as amended (the Act).

We invited interested parties to comment on the preliminary results. On February 23, 1995, case briefs were submitted by the Municipal Castings Fair Trade Council (MCFTC) (petitioners), and the Engineering Export Promotion Council of India (EEPC) and individually-named producers of the subject merchandise which exported iron-metal castings to the United States during the review period (respondents). On March 2, 1995, rebuttal briefs were submitted by the MCFTC and the EEPC. Comments addressed in this notice were presented in the case briefs.

The review covers the period January 1, 1990 through December 31, 1990. The review involves 14 companies and the following programs:

(1) Pre-shipment export financing
(2) Post-shipment export financing
(3) Income tax deductions under Section 80HHC
(4) Cash Compensatory Support (CCS) Program
(5) Sale of Import Licenses
(6) Advance Licenses
(7) Market Development Assistance
(8) International Price Reimbursement Scheme
(9) Free Trade Zones
(10) Preferential Freight Rates
(11) Preferential Diesel Fuel Program
(12) 100 Percent Export-Oriented Units Program

Applicable Statute and Regulations

The Department is conducting this administrative review in accordance with section 751(a) of the Tariff Act of 1930, as amended (the Act). Unless otherwise indicated, all citations to the statute and to the Department's regulations are in reference to the provisions as they existed on December 31, 1994. However, references to the Department's *Countervailing Duties; Notice of Proposed Rulemaking and Request for Public Comments*, 54 FR 23366 (May 31, 1989) (*Proposed Regulations*), are provided solely for further explanation of the Department's countervailing duty practice. Although the Department has withdrawn the particular rulemaking proceeding pursuant to which the *Proposed Regulations* were issued, the subject matter of these regulations is being considered in connection with an ongoing rulemaking proceeding which, among other things, is intended to conform the Department's regulations to the Uruguay Round Agreements Act. See 60 FR 80 (Jan. 3, 1995).

Scope of the Review

Imports covered by the review are shipments of Indian manhole covers and frames, clean-out covers and frames, and catch basin grates and frames. These articles are commonly called municipal or public works castings and are used for access or drainage for public utility, water, and sanitary systems. During the review period, such merchandise was classifiable under the *Harmonized Tariff Schedule* (HTS) item numbers 7325.10.0010 and 7325.10.0050. The HTS item numbers are provided for convenience and Customs purposes. The written description remains dispositive.

Calculation Methodology for Assessment and Cash Deposit Purposes

Pursuant to *Ceramica Regiomontana, S.A.* v. *United States*, 853 F. Supp. 431, 439 (CIT 1994), the Department is required to calculate a country-wide CVD rate, *i.e.*, the all-other rate, by ''weight averaging the benefits received by all companies by their proportion of exports to the United States, inclusive of zero rate firms and *de minimis* firms.'' Therefore, we first calculated a subsidy rate for each company subject to the administrative review. We then weight-averaged the rate received by each company using as the weight its share of total Indian exports to the United States of subject merchandise. We then summed the individual companies' weight-averaged rates to determine the subsidy rate from all programs benefitting exports of subject merchandise to the United States.

Since the country-wide rate calculated using this methodology was above *de minimis*, as defined by 19 CFR 355.7 (1994), we proceeded to the next step and examined the net subsidy rate calculated for each company to determine whether individual company rates differed significantly from the weighted-average country-wide rate, pursuant to 19 CFR 355.22(d)(3). Three companies (Nandikeshwari, Pvt. Ltd., Overseas Steel, Pvt. Ltd., and Sitaram Steel, Pvt. Ltd.) received significantly different net subsidy rates during the review period pursuant to 19 CFR 355.22(d)(3). These companies are treated separately for assessment and cash deposit purposes. All other companies are assigned the country-wide rate.

Analysis of Comments

Comment 1

Petitioners state that the Department improperly calculated the amount of countervailable benefit conferred by the Cash Compensatory Support (CCS) program. They state that the Department failed to follow its standard practice of calculating benefits from a program based upon the date the benefit is received rather than the date the benefit is earned. Petitioners argue that the Department only calculates benefits on an ''as earned'' basis when the benefit is earned on a shipment-by-shipment basis and the exact amount of the benefit is known at the time of export. Petitioners claim that the CCS program does not meet this exception because the exact amount of benefits to be received under the CCS program is not known at the time of export.

Respondents state that petitioners are incorrect. Respondents claim that the exporter knew at the time of shipment the amount of rebate he or she would receive under the CCS program.

Department's Position

CCS rebates are paid upon export and are calculated as a percentage of the f.o.b. invoice price. Thus, these rebates are earned on a shipment-by-shipment basis, and the exact amount of the rebate is known at the time of export. Therefore, the Department calculated the benefit from the CCS program on an ''as earned'' basis based upon the date of export, consistent with our long-standing practice and in conformity with the *Proposed Rules*. Section 355.48(b)(7) of the *Proposed Rules* provides that, in cases of an export benefit provided as a percentage of the value of the exported merchandise (such as a cash payment or an over-rebate of indirect taxes), the timing of the receipt of countervailable benefits will be the date of export. *See*, e.g., Certain Textile Mill Products and Apparel From Colombia, 52 FR 13272 (April 22, 1987), Cotton Shop Towels From Pakistan, 53 FR 34340 (September 6, 1988), and Certain Textile Mill Products From Thailand, 52 FR 7636 (March 12, 1987).

Petitioners argue that the benefits from the CCS program should not be calculated in this manner because it was not clear at the time of export whether

the exporter would receive the full amount of the CCS rebate. They base this argument on (1) the fact that, in the official publication in which the Government of India established the CCS rates, it reserved the right to withdraw or alter the rebates, and (2) the fact that the CCS rebate percentages would be reduced if the exporter waited six months or after the date of export or longer to submit the application for the rebates. However, the fact that a government may reserve the right to alter or terminate a program does not affect the timing of the receipt of benefits, or whether the exporter knew the amount of benefits he or she would receive. Indeed, one of the criteria used by the Department to determine whether a program which rebates indirect taxes is countervailable is whether the government periodically reviews and revises the rebate level based on changes in the indirect tax incidence incurred by the exporter. *See*, e.g., Leather Wearing Apparel From Argentina 59 FR 25611 (May 17, 1994).

Under the CCS program, exporters knew at the time of export that they would receive the full amount of the CCS rebate if they submitted their applications within six months of the date of export. Therefore, petitioners second point also does not merit a change in the our long-standing policy of calculating the benefit from the overrebate of indirect taxes based on the date of export of the merchandise.

Comment 2

Petitioners claim that the Department improperly set the cash deposit rate for the CCS program at zero. Petitioners state that the Department may only adjust the cash deposit rate if there has been a program-wide change as defined under section 355.50 of the Department's *Proposed Rules*. Petitioners claim that the CCS program does not qualify for an adjusted cash deposit rate under section 355.50 because the Government of India has only provided the Department with a copy of an ambiguous announcement of a suspension of the CCS program. They state that the announcement by India's Ministry of Commerce does not constitute an ''official act, such as the enactment of a statute, regulation, or decree'' as required by section 355.50 of the Department's regulations. Petitioners further state that the CCS program has only been suspended, not terminated. Petitioners state that, in Certain Fresh Cut Flowers from Ecuador, 52 FR 1361 (January 13, 1987), the Department determined that an indefinitely-suspended program implied the reinstatement of the program was possible and therefore refused to consider the indefinite suspension a program-wide change.

Respondents argue that the method of termination was as official as necessary under the Indian system of government. They state that the Department verified that the program was terminated and that no claims for benefits under the program were made by castings exporters after the termination date. Respondents further state that the Department verified that there were no outstanding residual benefits under the CCS program. Therefore, respondents conclude that the Department should maintain the CCS deposit rate at zero.

Department's Position

Section 355.50(a) of the *Proposed Rules* states that the Department may adjust the cash deposit rate when (1) there has been a program-wide change which occurred prior to the Department's preliminary results of review and (2) the Department is able to measure the change in the amount of countervailable subsidies provided under the program in question. In addition, section 355.50(b)(2) states that the change in the program must be effectuated by an official act, such as the enactment of a statute, regulation, or decree, or contained in the schedule of an existing statute, regulation, or decree. India's Ministry of Commerce terminated the CCS program as of July 3, 1991. Therefore, there was a program-wide change in the CCS program which (1) occurred prior to the January 24, 1995 preliminary results of review and (2) resulted in a change in the amount of countervailable subsidies that the Department was able to measure. This program-wide change was effectuated by an official government announcement which satisfies the requirements of section section 355.50(b)(2).

We agree with petitioners that it is our practice not to adjust the cash deposit rate for programs which are suspended rather than terminated. However, we disagree with petitioners' assertion that the CCS program is only suspended. While the India Ministry of Commerce announcement terminating the program refers to the program as being suspended, the conclusion of the notice states that the program has been terminated. *See* the December 13, 1993 verification report entitled *Verification of the Government of India (GOI) Questionnaire Response for the 1990 Countervailing Duty Order on Certain Iron-metal Castings from India.* As the verification report explains, officials from the Government of India confirmed that the CCS program is terminated. Therefore, we have determined that the CCS program has been terminated.

Furthermore, section 355.50(d) states that the Department will only adjust the cash deposit rates for terminated programs if it determines that residual benefits will not be bestowed under the terminated program. As stated in the Preliminary Results of this review, to ascertain whether castings exporters received any residual benefits from this terminated program, we reviewed the exporters accounting ledgers through September 1993 (which was the time of our verification for the 1990 administrative review and over two years after the effective termination of the CCS program which was July 3, 1991). Based upon this examination, we found no evidence of any application for or receipt of residual benefits under the CCS program.

Therefore, we confirm the decision made in the Preliminary Results that the cash deposit rate be adjusted to zero for the CCS program.

Comment 3

Petitioners argue that, to the extent that any respondent received CCS payments on non-subject castings, the Department should calculate and countervail the value of CCS payments on non-subject castings in these administrative reviews. They state that the Department's failure to countervail subsidies on non-subject castings exports is at odds with the language and intent of the countervailing duty law, which applies to any subsidy whether bestowed ''directly or indirectly.'' They argue that subsidies conferred on non-subject castings should be countervailed because these subsidies provide indirect benefits on exports of the subject castings.

Respondents state that petitioners have misapplied the term ''indirectly.'' They state that the CCS paid on other merchandise is not ''indirectly'' paid on subject castings merely because it is paid to the same producer. Respondents argue that there is no benefit—either direct or indirect—to the subject merchandise when benefits are paid on other products. Respondents state that petitioners are putting forth the old ''money is fungible'' argument, which has never been accepted by the Department. They state the Department should not do so now.

Department's Position

Section 771(5)(A)(ii) of the Act states that subsidies can be ''paid or bestowed directly or indirectly on the manufacture, production, or export of any class or kind of merchandise''. However, petitioners have

misinterpreted the term ''indirect subsidy.'' They argue that a subsidy tied to the export of product B may provide an indirect subsidy to product A, or that a reimbursement of costs incurred in the manufacture of product B may provide an indirect subsidy upon the manufacture of product A. As such, they argue that grants that are tied to the production or export of product B, should also be countervailed as a benefit upon the production or export of product A. This is at odds with established Department practice with respect to the treatment of subsidies, including indirect subsidies. The term ''indirect subsidies'' as used by the Department refers to the manner of delivery of the benefit which is conferred upon the merchandise subject to an investigation or review. The term, as used by the Department, does not imply that a benefit tied to one type of product also provides an indirect subsidy to another product. This kind of interpretation proposed by petitioners is clearly not within the purview or intent of the statutory language under section 771(5)(B)(ii).

In our *Proposed Rules,* we have clearly spelled out the Department's practice with respect to this issue. ''Where the Secretary determines that a countervailable benefit is tied to the production or sale of a particular product or products, the Secretary will allocate the benefit solely to that product or products. If the Secretary determines that a countervailable benefit is tied to a product other than the merchandise, the Secretary will not find a countervailable subsidy on the merchandise.'' Section 355.47(a). This practice of tying benefits to specific products is an established tenet of the Department's administration of the countervailing duty law. *See,* e.g., Industrial Nitrocellulose from France, 52 FR 833 (January 9, 1987); Apparel from Thailand, 50 FR 9818 (March 12, 1985); and Extruded Rubber Thread from Malaysia, 60 FR 17515 (April 9, 1995).

Comment 4

Respondents argue that the CCS program does not provide an over-rebate of indirect taxes. They argue that the charges paid to the Indian port authority on imported pig iron are taxes paid to the Government of India and contend that, while the port charges are labeled as ''wharfage, berthage, pilotage, and towage,'' these charges are more in the nature of taxes since they are not tied to the real cost of these services. Accordingly, respondents state that the Department should reconsider its finding that these charges are service charges rather than taxes and therefore are not eligible for rebate under the CCS program. In addition, they argue that, even if the CCS payments may have been over-rebated, the Department has miscalculated the over-rebate by disallowing respondents' claim that ''port dues'' be treated as an indirect tax. Respondents' state that dues are not fees for services and therefore should have been allowed as offsets to the CCS.

Petitioners claim that information provided by respondents themselves reveals that the port and harbor ''taxes'' rebated under the CCS program are not indirect taxes but are charges for services. They state that respondents' position is based upon the claim that payment for these charges is made to the Calcutta Port Trust, an alleged entity of the Government of India. Petitioners state that a payment made to a government does not inherently mean that the payment is a tax. The type of port charges under discussion in the CCS program are similar to the user fees charged by the U.S. government. User fees are charged by the government to help defray the government's cost of providing a service to the public, and are not regarded as taxes under U.S. law.

Department's Position

The CCS program was established to provide a rebate of indirect taxes incurred on items physically incorporated into an exported product. Items (h) and (i) of the Illustrative List of Export Subsidies permits the non-excessive rebate of indirect taxes and import charges paid on items physically incorporated into an export product. However, the Items (h) and (i) do not permit the rebate of service charges on such items.

During the verification of the 1990 administrative review, we examined information which showed that the port charges claimed by the exporters to be indirect taxes were, in fact, service charges. The documentation gathered at verification indicates that the item claimed as port charges included berthage, port dues, pilotage, and towage charges. *See* the February 25, 1994 report titled *Verification of Information Submitted by RSI India Pvt. Ltd. for the 1990 Administrative Review of the Countervailing Duty Order on Certain Iron-Metal Castings from India* which is on file in the Central Records Unit (room B009 of the Main Commerce Building). Because this was verified at the company level, we afforded the Government of India the opportunity to provide information to demonstrate that the port and harbor collections were actually indirect taxes rather than charges for services. The information provided by the Government of India did not demonstrate that these charges, which were used in the calculation of the indirect tax incidence, were indirect taxes or import charges that are allowable under item (h) or (i) of the Illustrative List of Export Subsidies. Therefore, we determined that the charges in question were service charges rather than import charges. As such, we disallowed these items in the calculation of the indirect tax incidence on items physically incorporated in the manufacture of castings under the CCS program. For further discussion of this analysis, *see* the May 26, 1994 briefing paper titled *Cash Compensatory Support (CCS) Program* which is on file in the Central Records Unit (room B009 of the Main Commerce Building).

Comment 5

Petitioners state that the Department improperly failed to countervail the value of advance licenses, because advance licenses are simply export subsidies and not the equivalent of a duty drawback program. Petitioners claim that the advance license program does not meet the criteria of a duty drawback system which would be permissible in light of Item (i) of the Illustrative List of Export Subsidies, annexed to the General Agreement on Tariffs and Trade (GATT) Subsidies Code (Illustrative List). They base this claim on the fact that (1) the advance licenses were not limited to use just for importing duty-free input materials because the licenses could be sold to other companies; (2) eligibility for drawback is always contingent upon the claimant demonstrating that the amount of input material contained in an export is equal to the amount of such material imported, which the respondents failed to do; and (3) the Government of India made no attempt to determine the amount of material that was physically incorporated (making normal allowances for waste) in the exported product as required under Item (i). For these reasons, petitioners state that the Department should countervail in full the value of advance licenses received by respondents during the period of review.

Respondents state that advance licenses allow importation of raw materials duty free for the purposes of producing export products. They state that if Indian exporters did not have advance licenses, the exporters would import the raw materials, pay duty, and then receive drawback upon export. Respondents argue that, although advance licenses are slightly different from a duty drawback system because

they allow imports duty free rather than provide for remittance of duty upon exportation, this does not make them countervailable. Respondents also state that no advances licenses were sold.

Department's Position

Petitioners have only pointed out the administrative differences between a duty drawback system and the advance license scheme used by Indian exporters. Such administrative differences can also be found between a duty drawback system and an export trade zone or a bonded warehouse. Each of these systems has the same function: each exists so that exporters may import raw materials to be incorporated into an exported product without the assessment of import duties.

The purpose of the advance license is to allow an importer to import raw materials used in the production of an exported product without first having to pay duty. Companies importing under advance licenses are obligated to export the products made using the duty-free imports. Item (i) of the Illustrative List specifies that the remission or drawback of import duties levied on imported goods that are physically incorporated into an exported product is not a countervailable subsidy, if the remission or drawback is not excessive. We determined that respondents used advance licenses in a way that is equivalent to how a duty drawback scheme would work. That is, they used the licenses in order to import, net of duty, raw materials which were physically incorporated into the exported products. Since the amount of raw materials imported was not excessive vis-a-vis to the products exported, we determine that use of the advance licenses was not countervailable.

Comment 6

Petitioners claim that the Department understated the benchmark interest rate used to calculate the benefits for pre-shipment and post-shipment loans. They state that, rather than using the interest rate obtained from commercial banks during verification or the average lending rates published by the International Market Fund (IMF), the Department used the average interest rates published by the Reserve Bank of India (RBI) for small-scale industry loans to calculate the benchmark. Petitioners claim that these were regulated and preferential small-scale industry rates which were used to calculate average benchmark interest rates. As such, the Department merely compared interest rates for one type of preferential loan to interest rates for another type of preferential loan.

Respondents state that the RBI rates used by the Department are the commercial rates available in India. Therefore, it is those rates which should be used as the benchmark.

Department's Position

We have used the average interest rates for loans to small-scale industries as published by the RBI as the benchmark for the administrative reviews of this order. (*See, e.g.,* the 1988 and 1989 *Final Results of Countervailing Duty Administrative Review: Certain Iron Metal Castings from India,* 56 FR 52515 and 56 FR 52521; October 21, 1991.)

It is the Department's long-standing policy that a program is not specific under the countervailing duty law solely because it is limited to small firms or to small- and medium-sized firms. *See,* e.g., section 355.43(b)(7) of the *Proposed Rules,* and Textile Mill Products and Apparel from Singapore, 50 FR 9840 (March 12, 1985). Therefore, interest rates which are set for a loan program provided to small-size firms and industries can be used as an appropriate benchmark. (*See,* e.g., the discussion of the benchmark used in the FOGAIN program in Bricks From Mexico, 49 FR 19564 (May 8, 1984).) Because the castings exporters qualify as small-scale industry firms, we have used the interest rates set under this program as our benchmark.

Comment 7

Petitioners argue that the Department has improperly failed to countervail International Price Reimbursement Scheme (IPRS) benefits bestowed on non-subject castings. They state that the Department's failure to countervail such subsidies is at odds with the language and intent of the countervailing duty law, which applies to any bounty or grant whether bestowed directly or indirectly. In addition, because eligibility for IPRS payments is based on the use of domestic pig iron, and pig iron is fungible, castings exporters can easily avoid paying countervailable duties by making no claims for IPRS payments on the subject castings but rather make all such claims on non-subject castings. Therefore, if a castings exporter used approximately equal amounts of pig iron and scrap to manufacture its castings, it could receive IPRS payments for all of the pig iron it consumed by claiming that 100 percent of its pig iron was used to produce non-subject castings. Thus, petitioners state that, although IPRS claims would only be for exports of non-subject castings, the IPRS payments would reimburse the producer for the cost of pig iron actually consumed to manufacture subject castings as well as non-subject castings.

Department's Position

Our response to petitioners' argument that IPRS rebates received on non-subject exports provides an indirect benefit to exports of the subject merchandise can be found in the *Department's Position* for *Comment 3* above. We find no merit in petitioners' claim that the castings exporters can avoid paying countervailing duties by shifting their claims for IPRS payments from subject to non-subject castings. When claims are filed for IPRS payments, the amount of the rebate determined by the Government of India is based on the contention that 100 percent of the material used in the production of the exported good is domestic pig iron. This being the case, it is impossible to shift the claims from subject to non-subject merchandise because the IPRS payments are based upon 100 percent use of domestic pig iron regardless of the actual content of domestic pig iron, imported pig iron, or scrap used in the production of the exported good. In addition, at the point in time when the companies submitted their IPRS claims covering the period of this administrative review, the Department's policy was to countervail the full amount of IPRS rebates. Therefore, there was no incentive for the castings exporters to shift their domestic pig iron claims from subject to non-subject castings.

Comment 8

Petitioners state that under section 355.44 of the *Proposed Rules,* the Department defines a countervailable benefit as the full or partial exemption, remission, or deferral of a direct tax or social welfare charge in excess of the tax the firm otherwise would pay absent a government program. They state that, under the regulations, to examine the taxes the firm otherwise would have paid, the Department will take into account the firm's total tax liability as a result of a firm's use of a tax subsidy. Therefore, petitioners argue that the Department's approach to the treatment of tax subsidies should likewise apply to the receipt of the IPRS subsidies on non-subject castings, in that both types of subsidies reduce a firm's total costs whether it be in the form of taxes or the cost of pig iron inputs.

Respondents state that petitioners' argument is misplaced. They state that the IPRS is not remotely like a tax program. Furthermore, respondents

claim that the IPRS received on non-subject merchandise does not benefit other merchandise the way a tax reduction might benefit all production.

Department's Position

Section 355.44(i)(1) of the *Proposed Rules* states that the countervailable benefit conferred by a tax program is the amount of taxes a company otherwise would have paid absent the use of the program. To determine that amount, the Department must examine the company's total tax liability and the effect of the tax program on that liability, as there are numerous variables which affect that liability. For example, if a tax program allows an exporter a tax deduction based on the value of 20 percent of its export sales, this does not necessarily mean that there is a benefit from this program. If the company has a net loss for the year before taking any tax deductions, then there is no benefit in the period of review provided from this tax program. With or without the use of this tax program, the company's tax liability is still zero.

The methodology the Government of India used to determine the amount of the benefit conferred by a tax program has no effect on how the Department determines whether a grant received by a company provides a countervailable benefit to the subject merchandise. Grants that are tied to production or export of only non-subject merchandise do not provide a countervailable benefit to the subject merchandise. As stated in our response to Comment 3, the allocation of countervailable benefits conferred upon a specific product or market is clearly detailed in section 355.47 of the *Proposed Rules.* This allocation methodology applies equally to grants as it does to tax programs. Although to determine the benefit from an export tax program, the Department must examine whether the tax program changes company's total tax liability, as explained above, the Department will allocate any benefit found from the use of that export tax program only over the company's export sales, not the company's total sales. *See,* e.g. Extruded Rubber Thread from Malaysia. It is for these reasons that we have determined that IPRS rebates provided upon non-subject merchandise do not provide a benefit to the subject castings exported to the United States.

Comment 9

Petitioners state that the Department should countervail benefits provided to castings exporters through exchange rate schemes. A verification report for the 1990 administrative review explains that, previously, companies converted dollars to rupees at exchange rates no higher than 25 rupees per dollar, but, under a new scheme, the RBI allowed companies to convert 40 percent of their dollars at this rate and remaining 60 percent of their dollars at a rate of 30 rupees per dollar. *See* the December 13, 1993 verification report entitled *Meetings with Commercial Banks for the 1990 Administrative Review of the Countervailing Duty Order on Certain Iron-metal Castings from India.* Petitioners state that this program is targeted to certain export markets because it provides benefits for export earnings in U.S. dollars.

Respondents state that this allegation of a new subsidy is well beyond the deadline established under 19 CFR 355.31(c)(1)(ii). They also state that there is nothing in the record to suggest that this is a subsidy. Respondents contend that it appears that the program merely allows exporters to convert some of their dollars at the commercial rate, rather than the controlled rate. Furthermore, they state that there is no information in the record that respondents used this program. Respondents also claim that the fact the program refers to the conversion of dollars into rupees is not an indication of targeting because the U.S. dollar is the currency of international commerce.

Department's Position

The time limits for making allegations of a new subsidy in an administrative review are established under 19 CFR 355.31(c)(1)(ii). The allegation made by petitioner is untimely under the regulations and must be rejected. Further, this alleged subsidy program was not in place during the period of the administrative review. Rather, it was instituted in March 1992. *See* the *Reserve Bank of India Annual Report 1993–94* (page 22) which is on file in the Central Records Unit (room B009 of the Main Commerce Building).

Comment 10

Respondents state that countervailing the CCS payments and the income tax deductions under section 80HHC of the Income Tax Act double counts the subsidy from the CCS program. They argue that, under section 80HHC, payments received under the CCS program are considered export income which may be deducted from taxable income to determine the tax payable by the exporter. Therefore, respondents argue that, since CCS payments are also part of the deductions under 80HHC, to countervail the payments and then the deduction is to double count the CCS benefit. In addition, respondent's state that, just as the CCS payments form a component of profit for purposes of the 80HHC tax deduction, so do the payments received by respondents under the IPRS program. They argue that since IPRS rebates are no longer paid on subject castings exported to the United States, the deduction by respondents of IPRS rebates from income for 80HHC purposes is not a countervailable subsidy benefitting subject castings exported to the United States.

Petitioners claim that there is no double-counting of benefits because respondents first benefit from the excessive rebates under the CCS program, and also benefited again because the 80HHC program eliminated the need to pay taxes on the income from those rebates. Regarding respondents' comment on IPRS, petitioners state that respondents have argued for many years that IPRS payments merely represent the difference between the cost of domestic pig iron and the international price for pig iron. Therefore, petitioners conclude that because IPRS payments are not profit, they do not represent a benefit under 80HHC, and there is no reason to factor out the IPRS payments when calculating the subsidy from the 80HHC tax program.

Department's Position

Under section 80HHC of the Income Tax Act, the Government of India allows exporters to deduct from taxable income profits derived from the export of goods and merchandise. The benefit conferred by this program is the amount of taxes that would have been paid by the castings exporters absent this program. Therefore, the full amount of the tax savings realized by castings exporters from this exemption under the 80HHC program is countervailable.

Respondents' argument that we should adjust the benefit of the 80HHC tax program to account for CCS and IPRS rebates is at odds with the language and intent of the statute. The only permissible offsets to a countervailable subsidy are those provided under section 771(6) of the Act. The Department has consistently interpreted this provision of the statute as the exclusive source of permissible offsets. Such offsets include application fees paid to attain the subsidy, losses in the value of the subsidy resulting from deferred receipt, and export taxes specifically intended to offset the subsidy received. Adjustments which do not strictly fit the descriptions under section 771(6) are disallowed. (*See,* e.g., Textile Mill Products From Mexico, 50 FR 10824 (March 18, 1985).) Adjusting the benefit conferred by the 80HHC tax

program to account for the CCS and IPRS rebates is not a permissible offset under section 771(6) of the Act. In addition, we also note that, with respect to respondents' CCS argument, that it is the Department's established policy to disregard the secondary tax effects of countervailable subsidies. *See,* e.g., Certain Fresh Atlantic Groundfish From Canada, 51 FR 10041 (March 24, 1986) and Fresh and Chilled Atlantic Salmon From Norway, 56 FR 7678 (February 25, 1991).

Comment 11

Respondents state that it is not appropriate to include company rates that are based on best information available (BIA) in the calculation of the country-wide rate. Respondents also state that the inclusion in the country-wide rate of companies' rates which are ''significantly'' higher than the country-wide rate is improper when those companies are also given their own separate company-specific rates. *See* 19 CFR 355.22(d)(3) for explanation about the calculation of individual, ''significantly different'' rates. Respondents argue that Ceramica Regiomontana, S.A. v. United States, 853 F. Supp. 431 (CIT 1994) does not require the Department to include ''significantly'' higher rates in calculation of the country-wide rate. They state that a careful reading of that case, as well as Ipsco Inc. v. United States, 899 F. 2d 1192 (Fed. Cir. 1990), demonstrates that the courts in both cases were only concerned about the over-statement of rates owing to elimination of *de minimis* or zero margins from the country-wide rate calculation. Respondents claim that every company's rate is being pulled up to a percentage greater than it should be because the Department has included in the weighted-average country-wide rate the rates of companies which received their own ''significantly'' higher company-specific rates. Thus, they state that the country-wide rate is excessive for every company to which it applies. Respondents state that, not only is it unfair to charge this excessive countervailing duty, it is also contrary to law, in conflict with the international obligations of the United States, and violative of due process.

Petitioners state that respondents have misread Ceramica and Ipsco. They state that the plain language of Ceramica requires the Department to calculate a country-wide rate by weight averaging the benefits received by all companies by their proportion of exports to the United States. Petitioners state that while Ceramica and Ipsco dealt factually with the circumstances in which respondent companies had lower-than-average rates, the principle on which these cases is based applies equally to instances in which some companies have higher-than-average rates. They state that the courts have determined that the benefits received by all companies under review are to be weight-averaged in the calculation of the country-wide rate. Therefore, petitioners conclude that the Department followed the clear directives from the court.

Department's Position

We disagree with respondents that ''significantly different'' higher rate (including BIA rates) should not be included in the calculation of the CVD country-wide rate. Respondents' reliance on Ceramica and Ipsco is misplaced. In those cases, the Department excluded the zero and *de minimis* company-specific rates that were calculated before calculating the country-wide rate. The court in Ceramica, however, rejected this calculation methodology. Based upon the Federal Circuit's opinion in Ipsco, the court held that Commerce is required to calculate a country-wide CVD rate applicable to non-*de minimis* firms by ''weight averaging the benefits received by all companies by their proportion of exports to the United States, inclusive of zero rate firms and *de minimis* firms.'' Ceramica, 853 F. Supp. at 439 (emphasis on ''all'' added).

Thus, the court held that the rates of all firms must be taken into account in determining the country-wide rate. As a result of Ceramica, the Department no longer calculates, as it formerly did, an ''all others'' country-wide rate. Instead, it now calculates a single country-wide rate at the outset, and then determines, based on that rate, which of the company-specific rates are ''significantly'' different.

Given that the courts in both Ipsco and Ceramica state that the Department should include all company rates, both *de minimis* and non *de minimis,* there is no legal basis for excluding ''significantly different'' higher rates, including BIA rates. To exclude these higher rates, while at the same time including zero and *de minimis* rates, would result in a similar type of country-wide rates bias of which the courts were critical when the Department excluded zero and *de minimis* rates under its former calculation methodology.

Final Results of Review

For the period January 1, 1990 through December 31, 1990, we determine the net subsidies to be 4.29 percent *ad valorem* for Nandikeshwari, Pvt. Ltd., 18.52 percent for Overseas Steel, Pvt. Ltd., 22.32 percent for Sitaram Steel, Pvt. Ltd., and 10.16 percent *ad valorem* for all other companies.

The Department will instruct the U.S. Customs Service to assess the following countervailing duties:

Manufacturer/exporter	Rate (percent)
Nandikeshwari, Pvt. Ltd	4.29
Overseas Steel, Pvt. Ltd	18.52
Sitaram Steel, Pvt. Ltd	22.32
All Other Companies	10.16

The Department will also instruct the U.S. Customs Service to collect a cash deposit of estimated countervailing duties of 5.92 percent of the f.o.b. invoice price on all shipments of the subject merchandise entered, or withdrawn from warehouse, for consumption on or after the date of publication of the final results of this review from all companies except Nandikeshwari, Pvt. Ltd., Overseas Steel, Pvt. Ltd. and Sitaram Steel, Pvt. Ltd.. Because of the termination of benefits attributable to the CCS program, the cash deposit rates for these companies are 0.05 percent for Nandikeshwari, Pvt. Ltd. 14.28 percent for Overseas Steel, Pvt. Ltd. and 18.08 percent for Sitaram Steel, Pvt. Ltd.

This notice serves as the only reminder to parties subject to APO of their responsibilities concerning the return or destruction of proprietary information disclosed under APO in accordance with 19 CFR § 353.34(d). Failure to comply is a violation of the APO.

This administrative review and notice are in accordance with section 751(a)(1) of the Act (19 U.S.C. 1675(a)(1)) and 19 CFR 355.22.

Dated: August 17, 1995.

Susan G. Esserman,

Assistant Secretary for Import Administration.

[FR Doc. 95–21437 Filed 8–28–95; 8:45 am]

BILLING CODE 3510–DS–P

National Oceanic and Atmospheric Administration

[I.D. 040795A]

Endangered and Threatened Wildlife and Plants; Reopening of Public Comment Period on the Proposed Recovery Plan for Snake River Salmon

AGENCY: National Marine Fisheries Service (NMFS), National Oceanic and

Atmospheric Administration (NOAA), Commerce.

ACTION: Notice of availability; reopening of public comment period.

SUMMARY: NMFS is reopening the public comment period on the Proposed Recovery Plan for Snake River salmon. This will provide the public with the opportunity to comment until and after the direct costs addendum to the Proposed Recovery Plan becomes available. All interested parties are invited to submit comments.

DATES: The comment period, which originally closed on July 17, 1995, has been reopened and now closes on November 17, 1995.

NMFS will accept comments received between July 17, 1995, and November 17, 1995.

ADDRESSES: Written comments and materials regarding the Proposed Recovery Plan and the direct costs addendum should be directed to Snake River Salmon Recovery Plan, National Marine Fisheries Service, 525 NE Oregon Street, Suite 500, Portland, OR 97232.

FOR FURTHER INFORMATION CONTACT: Katherine Hollar, (503) 231–2337.

SUPPLEMENTARY INFORMATION: On April 18, 1995 (60 FR 19388), NMFS published a notice of availability of the Proposed Recovery Plan for Snake River salmon protected by the Endangered Species Act (ESA). Public comments were solicited, 11 public hearings were announced, and the comment period was set to expire on July 17, 1995. Further opportunity for public input was subsequently requested (60 FR 26720, May 18, 1995), and additional public hearings were conducted in Idaho Falls, ID on June 21, 1995, and in Spokane, WA, on June 29, 1995.

NMFS is keenly aware of the public interest in salmon recovery. This notice reopens the public comment period until November 17, 1995. An estimate of the direct costs of Proposed Recovery Plan tasks, and a description of the time required to carry out those tasks will be available this fall, during the public comment period, as an addendum to the Proposed Recovery Plan. Copies will be mailed to everyone who received the Proposed Recovery Plan. Notice of the availability of this addendum and its comment period are expected to be published in the **Federal Register** in October.

Dated: August 21, 1995.

William W. Fox, Jr.,

Director, Office of Protected Resources, National Marine Fisheries Service.

[FR Doc. 95–21403 Filed 8–28–95; 8:45 am]

BILLING CODE 3510–22–F

[I.D. 081695C]

Gulf of Mexico Fishery Management Council; Public Meetings

AGENCY: National Marine Fisheries Service (NMFS), National Oceanic and Atmospheric Administration (NOAA), Commerce.

ACTION: Notice of public meetings.

SUMMARY: The Gulf of Mexico Fishery Management Council (Council) will convene public meetings.

DATES: The meetings will be held on September 18–21, 1995.

ADDRESSES: These meetings will be held at the Broadwater Beach Resort, 2060 Beach Boulevard, Biloxi, MS; telephone: (601) 388–2211.

Council address: Gulf of Mexico Fishery Management Council, 5401 West Kennedy Boulevard, Suite 331, Tampa, FL 33609.

FOR FURTHER INFORMATION CONTACT: Wayne E. Swingle, Executive Director, Gulf of Mexico Fishery Management Council; telephone: (813) 228–2815.

SUPPLEMENTARY INFORMATION: The meeting dates are as follows:

September 20

8:30 a.m.—Convene to receive public testimony.

8:45 a.m.–11:30 a.m.—Receive final public testimony on Draft Reef Fish Amendment 12 (NOTE: Testimony cards must be turned in to staff before the start of public testimony).

Issues included for final action in Amendment 12 are: Commercial reef fish harvest by shrimp vessels, definition of bait, personal consumption limit, dealer transport requirement, bag limit on commercial vessels, amberjack size and bag limits and Florida compatible season closures, gag and black grouper size limits, red snapper minimum size limits, and aggregate recreational bag limit for reef fish. Copies of the draft amendment are available from the Council office (see **ADDRESSES**).

1:00 p.m.–4:00 p.m.—Receive a report of the Reef Fish Management Committee and adopt measures in Reef Fish Amendment 12.

4:00 p.m.–5:30 p.m.—Discuss Draft Mackerel Amendment 8.

September 21

8:30 a.m.–10:00 a.m.—Reconvene to continue discussion on Draft Mackerel Amendment 8.

10:00 a.m.–10:15 a.m.—Receive a report of the Habitat Protection Committee.

10:15 a.m.–10:45 a.m.—Receive a report of the Shrimp Management Committee.

10:45 a.m.–11:00 a.m.—Receive a report of the Personnel Committee.

11:00 a.m.–11:15 a.m.—Receive a report of the Data Collection Committee.

11:15 a.m.–11:30 a.m.—Receive a report of the Joint Stone Crab/Spiny Lobster Management Committee.

1:00 p.m.–1:45 p.m.—Receive Enforcement and Director's reports.

1:45 p.m.–2:00 p.m.—Other Business to be discussed.

2:00 p.m.–2:15 p.m.—Election of Chairman and Vice Chairman.

September 18

11:00 a.m.–12:00 p.m.—Orientation session for new Council members.

1:00 p.m.–5:00 p.m.—Convene the Reef Fish Management Committee.

September 19

8:00 a.m.–3:00 p.m.—Convene the Habitat Protection Committee, Shrimp Management Committee, Data Collection Committee, and Joint Stone Crab/Spiny Lobster Management Committee.

Special Accommodations

These meetings are physically accessible to people with disabilities. Requests for sign language interpretation or other auxiliary aids should be directed to Patricia Bear at the Council (see **ADDRESSES**) by September 11, 1995.

Dated: August 21, 1995.

Richard H. Schaefer,

Director, Office of Fisheries Conservation and Management, National Marine Fisheries Service.

[FR Doc. 95–21311 Filed 8–28–95; 8:45 am]

BILLING CODE 3510–22–F

[I.D. 081695D]

Mid-Atlantic Fishery Management Council; Meetings

AGENCY: National Marine Fisheries Service (NMFS), National Oceanic and Atmospheric Administration (NOAA), Commerce.

ACTION: Notice of public meeting.

SUMMARY: The Mid-Atlantic Fishery Management Council's Summer Flounder Monitoring Committee will hold a public meeting.

DATES: The meeting will be held on September 14, 1995, from 10:00 a.m. until 5:00 p.m.

ADDRESSES: The meeting will be held at the Radisson Hotel Philadelphia, 500 Stevens Drive, Lester, PA; telephone 215–521–5900.

Council Address: Mid-Atlantic Fishery Management Council, 300 S. New Street, Dover, DE 19901.

FOR FURTHER INFORMATION CONTACT: David R. Keifer, Executive Director, Mid-Atlantic Fishery Management Council; telephone: 302–674–2331.

SUPPLEMENTARY INFORMATION: The purpose of this meeting is to review the summer flounder stock assessment and make recommendations regarding the quota and management measures for 1996.

Special Accommodations

This meeting is physically accessible to people with disabilities. Requests for sign language interpretation or other auxiliary aids should be directed to Joanna Davis at 302–674–2331 at least 5 days prior to the meeting date.

Dated: August 21, 1995.

Richard H. Schaefer,

Director, Office of Fisheries Conservation and Management, National Marine Fisheries Service.

[FR Doc. 95–21312 Filed 8–28–95; 8:45 am]

BILLING CODE 3510–22–F

COMMITTEE FOR THE IMPLEMENTATION OF TEXTILE AGREEMENTS

Adjustment of Import Limits for Certain Cotton, Wool and Man-Made Fiber Textile Products Produced or Manufactured in Guatemala

Augus 24, 1995.

AGENCY: Committee for the Implementation of Textile Agreements (CITA).

ACTION: Issuing a directive to the Commissioner of Customs adjusting limits.

EFFECTIVE DATE: August 31, 1995.

FOR FURTHER INFORMATION CONTACT: Jennifer Aldrich, International Trade Specialist, Office of Textiles and Apparel, U.S. Department of Commerce, (202) 482–4212. For information on the quota status of these limits, refer to the Quota Status Reports posted on the bulletin boards of each Customs port or call (202) 927–5850. For information on embargoes and quota re-openings, call (202) 482–3715.

SUPPLEMENTARY INFORMATION:

Authority: Executive Order 11651 of March 3, 1972, as amended; section 204 of the Agricultural Act of 1956, as amended (7 U.S.C. 1854).

The current limit for Category 448 is being increased by application of swing, reducing the limit for Categories 351/651 to account for the increase.

A description of the textile and apparel categories in terms of HTS numbers is available in the CORRELATION: Textile and Apparel Categories with the Harmonized Tariff Schedule of the United States (see **Federal Register** notice 59 FR 65531, published on December 20, 1994). Also see 60 FR 14931, published on March 21, 1995.

The letter to the Commissioner of Customs and the actions taken pursuant to it are not designed to implement all of the provisions of the bilateral agreement, but are designed to assist only in the implementation of certain of its provisions.

Rita D. Hayes,

Chairman, Committee for the Implementation of Textile Agreements.

Committee for the Implementation of Textile Agreements

August 24, 1995.

Commissioner of Customs,

Department of the Treasury, Washington, DC 20229.

Dear Commissioner: This directive amends, but does not cancel, the directive issued to you on March 15, 1995, by the Chairman, Committee for the Implementation of Textile Agreements. That directive concerns imports of certain cotton, wool and man-made fiber textile products, produced or manufactured in Guatemala and exported during the twelve-month period which began on January 1, 1995 and extends through December 31, 1995.

Effective on August 31, 1995, you are directed to adjust the limits for the following categories, as provided under the provisions of the current bilateral agreement, as amended, between the Governments of the United States and Guatemala:

Category	Adjusted twelve-month limit [1]
351/651	251,936 dozen.
448	50,528 dozen.

[1] The limits have not been adjusted to account for any imports exported after December 31, 1994.

The guaranteed access levels remain unchanged.

The Committee for the Implementation of Textile Agreements has determined that these actions fall within the foreign affairs exception to the rulemaking provisions of 5 U.S.C. 553(a)(1).

Sincerely,

Rita D. Hayes,

Chairman, Committee for the Implementation of Textile Agreements.

[FR Doc. 95–21434 Filed 8–28–95; 8:45 am]

BILLING CODE 3510–DR–F

Adjustment of an Import Limit for Certain Cotton and Man-Made Fiber Textile Products Produced or Manufactured in Kuwait

August 23, 1995.

AGENCY: Committee for the Implementation of Textile Agreements (CITA).

ACTION: Issuing a directive to the Commissioner of Customs reducing a limit.

EFFECTIVE DATE: August 30, 1995.

FOR FURTHER INFORMATION CONTACT: Janet Heinzen, International Trade Specialist, Office of Textiles and Apparel, U.S. Department of Commerce, (202) 482–4212. For information on the quota status of this limit, refer to the Quota Status Reports posted on the bulletin boards of each Customs port or call (202) 927–5850. For information on embargoes and quota re-openings, call (202) 482–3715.

SUPPLEMENTARY INFORMATION:

Authority: Executive Order 11651 of March 3, 1972, as amended; section 204 of the Agricultural Act of 1956, as amended (7 U.S.C. 1854).

The current limit for Categories 340/640 is being reduced for carryforward used.

A description of the textile and apparel categories in terms of HTS numbers is available in the CORRELATION: Textile and Apparel Categories with the Harmonized Tariff Schedule of the United States (see **Federal Register** notice 59 FR 65531, published on December 20, 1994). Also see 60 FR 17330, published on April 5, 1995.

The letter to the Commissioner of Customs and the actions taken pursuant to it are not designed to implement all of the provisions of the Uruguay Round Agreements Act and the Uruguay Round Agreement on Textiles and Clothing, but are designed to assist only in the implementation of certain of their provisions.

Rita D. Hayes,

Chairman, Committee for the Implementation of Textile Agreements.

Committee for the Implementation of Textile Agreements

August 23, 1995.

Commissioner of Customs,

Department of the Treasury, Washington, DC 20229.

Dear Commissioner: This directive amends, but does not cancel, the directive issued to you on March 30, 1995, by the Chairman, Committee for the Implementation of Textile Agreements. That directive concerns imports of certain cotton and man-made fiber textile products, produced or manufactured in Kuwait and exported during the twelve-month period which began on January 1, 1995 and extends through December 31, 1995.

Effective on August 30, 1995, you are directed to reduce the limit for Categories 340/640 to 206,998 dozen [1], as provided

[1] The limit has not been adjusted to account for any imports exported after December 31, 1994.

under the Uruguay Round Agreements Act and the Uruguay Round Agreement on Textiles and Clothing.

The Committee for the Implementation of Textile Agreements has determined that this action falls within the foreign affairs exception to the rulemaking provisions of 5 U.S.C. 553(a)(1).

Sincerely,

Rita D. Hayes,

Chairman, Committee for the Implementation of Textile Agreements.

[FR Doc. 95–21314 Filed 8–28–95; 8:45 am]

BILLING CODE 3510–DR–F

DEPARTMENT OF DEFENSE

Public Information Collection Requirement Submitted to the Office of Management and Budget (OMB) for Review

ACTION: Notice.

The Department of Defense has submitted to OMB for clearance, the following proposal for collection of information under the provisions of the Paperwork Reduction Act (44 U.S.C. Chapter 35).

Title: Defense Reutilization and Marketing Service (DRMS) Customer Service Survey

Type of request: Expedited Processing—Approval date requested: 30 days following publication in the **Federal Register.**

Number of respondents: 1,184.

Responses per respondent: 1.

Annual responses: 1,184.

Average burden per response: 10 minutes.

Annual burden hours: 198.

Needs and uses: The information collected hereby, indicates the level of service which the Defense Reutilization and Marketing Service (DRMS) provides to its customers. Voluntary surveys conducted in this manner will enable DRMS to improve customer satisfaction and raise the level of service, thereby implementing the concepts of Executive Order 12862, ''Setting Customer Service Standards.''

Affected public: Individuals or households; Business or other for-profit; Not-for-profit institutions; Farms; State, local, or tribal government

Frequency: Annually.

Respondent's obligation: Voluntary.

OMB Desk Officer: Mr. Peter N. Weiss.

Written comments and recommendations on the proposed information collection should be sent to Mr. Weiss at the Office of Management and Budget, Desk Officer for DoD, Room 10236, New Executive Office Building, Washington, DC 20503.

DOD clearance officer: Mr. William Pearce.

Written requests for copies of the information collection proposal should be sent to Mr. Pearce, WHS/DIOR, 1215 Jefferson Davis Highway, Suite 1204, Arlington, VA 22202-4302.

Dated: August 24, 1995.

Patricia L. Toppings,

Alternate OSD Federal Register Liaison Officer, Department of Defense.

[FR Doc. 95–21385 Filed 8-28-95; 8:45 am]

BILLING CODE 5000–04–P

Office of the Secretary

Group of Advisors to the National Security Education Board Meeting

AGENCY: Office of the Assistant Secretary of Defense, Strategy and Requirements.

ACTION: Notice of meeting.

SUMMARY: Pursuant to Public Law 92–463, notice is hereby given of a forthcoming meeting of the Group of Advisors to the National Security Education Board. The purpose of the meeting is to review and make recommendations to the Board concerning requirements established by the David L. Boren National Security Education Act, Title VII of Public Law 102–183, as amended.

DATES: September 18 and 19, 1995.

ADDRESSES: The National Security Education Program Office, 1101 Wilson Boulevard, Suite 1210, Rosslyn, Virginia 22209.

FOR FURTHER INFORMATION CONTACT: Mr. Edmond J. Collier, Deputy Director for External Affairs, National Security Education Program, 1101 Wilson Boulevard, Suite 1210, Rosslyn, Virginia 22209–2248; (703) 696–1991. Electronic mail address: collier@nsep.policy.osd.mil.

SUPPLEMENTARY INFORMATION: The meeting of the Group of Advisors to the National Security Education Program is open to the public.

Dated: August 23, 1995.

Patricia L. Toppings,

Alternate OSD Federal Register Liaison Officer, Department of Defense.

[FR Doc. 95–21382 Filed 8–28–95; 8:45 am]

BILLING CODE 5000–04–M

Membership; Defense Mapping Agency Performance Review Board

AGENCY: Defense Mapping Agency (DMA) Department of Defense (DoD).

ACTION: Notice of membership of the Defense Mapping Agency Performance Review Board (DMA PRB).

SUMMARY: This notice announces the appointment of the members of the DMA PRB. The publication of PRB membership is required by 5 U.S.C. 4314(c)(4). The Board provides fair and impartial performance appraisals and makes recommendations regarding performance ratings and performance awards to the Director, DMA.

EFFECTIVE DATE: 15 September 1995.

FOR FURTHER INFORMATION CONTACT: B.R. Webster, Defense Mapping Agency, Office of Human Resources, 8613 Lee Highway, Fairfax, VA 22031–2137, telephone (703) 285–9151.

SUPPLEMENTARY INFORMATION: Per 5 U.S.C. 4314(c)(4), the following is a standing register of executives appointed to the DMA PRB; specific PRB panels will be constituted from this standing register. Executives listed will serve a one-year renewable term, effective 15 September 1995.

ANCELL, A. Clay, Associate Director, Requirements and Operations, DMA

BOGNER, Cynthia K., Comptroller, DMA

BOYD, Jimmy W., Associate Director, Engineering and Maintenance Support Division, Acquisition and Technology Group

BROWN, William J., Assistant Director for Transition Activities, DMA

BUCK, Irvin P., Associate Director, Customer Support Division, Acquisition and Technology Group

COGHLAN, Thomas K., Director, Planning and Analysis, DMA

GUSTIN, Russell T., Associate Director, Program Management Division, Acquisition and Technology Group

HALL, Charles D., Associate Director, International Operations Division, Operations Group

HALL, Robert H., Assistant Director for Transition Activities, DMA

HENNIG, Thomas A., Associate Director for Technology and Information, DMA

HOGAN, William N., Director, Requirements and Policy Integration Division, DMA

IVERY, Barbara A., Assistant Director, Source Management Division (Western Office), Operations Group

JACKSON, Mikel F., Assistant Director, Data Generation Division (Eastern Office), Operations Group

JOHNSON, James E., Associate Director, Staff Support Division, Acquisition and Technology Group

LABOVITZ, Mordecai Z., Director, Procurement, DMA

LENCZOWSKI, Roberta E., Director, Acquisition and Technology Group, DMA

MADISON, Harold W., Director, Installation Management Group, DMA
MUNCY, Larry N., Associate Director, Source Management Division, Operations Group
PEELER, Paul L., Jr., Assistant Director for Transition Activities, DMA
PHILLIPS, Earl W., Director, Operations Group, DMA
SCHNEIER, Jan S., Associate Director, Data Generation Division, Operations Group
SMITH, Kathleen M., Associate Director for Interoperability Division, Acquisition and Technology Group
SMITH, Lon M., Associate Director, OG Support Staff, Operations Group
SMITH, Robert N., Associate Director, Customer Services Division, Operations Group
SMITH, William D., Deputy Director, DMA
WARD, Curtis B., Associate Director, Customer Support Division, Operations Group
WELCH, Betty S., Director, Human Resources, DMA

Dated: August 22, 1995.

L.M. Bynum,

Alternate OSD Federal Register Liaison Officer, Washington Headquarters Services, Department of Defense.

[FR Doc. 95–21384 Filed 8–28–95; 8:45 am]

BILLING CODE 5000–04–M

Public Information Collection Requirement Submitted to the Office of Management and Budget (OMB) for Review

ACTION: Notice.

The Department of Defense has submitted to OMB for clearance, the following proposal for collection of information under the provisions of the Paperwork Reduction Act (44 U.S.C. Chapter 35).

Title; applicable form; and OMB control number: Request for Verification of Birth; DD Form 372; OMB Control Number 0704–0006.

Type of request: Expedited Processing—Approval date requested: 30 days following publication in the **Federal Register**.

Number of respondents: 100,000.

Responses per respondent: 1.

Annual responses: 100,000.

Average burden per response: 5 minutes.

Annual burden hours: 8,300.

Needs and uses: 10 U.S.C. 505, 3253, 5013, and 8253 establish the age and citizenship requirements for enlistment into the Armed Forces, to include the Coast Guard. If an applicant is unable to provide a birth certificate, the recruiter forwards DD Form 372, ''Request for Verification of Birth,'' to the appropriate state, local, or tribal government agency requesting verification of the applicant's birth. The information collected hereby, ensures that the applicant falls within the established age limitations, and that the applicant's place of birth supports the claimed citizenship status.

Affected public: State, local, or tribal government.

Frequency: On occasion.

Respondent's obligation: Required to obtain or retain benefits.

OMB desk officer: Mr. Edward C. Springer.

Written comments and recommendations on the proposed information collection should be sent to Mr. Springer at the Office of Management and Budget, Desk Officer for DoD, Room 10236, New Executive Office Building, Washington, DC 20503.

DOD clearance officer: Mr. William Pearce.

Written requests for copies of the information collection proposal should be sent to Mr. Pearce, WHS/DIOR, 1215 Jefferson Davis Highway, Suite 1204, Arlington, VA 22202–4302.

Dated: August 23, 1995.

Patricia L. Toppings,

Alternate OSD Federal Register Liaison Officer, Department of Defense.

[FR Doc. 95–21383 Filed 8–28–95; 8:45 am]

BILLING CODE 5000–04–P

Department of the Army

Corps of Engineers

Intent to Prepare a Draft Environmental Impact Statement (DEIS) for Flood Damage Control on the Upper Des Plaines River, IL

AGENCY: U.S. Army Corps of Engineers, DOD.

ACTION: Notice of intent.

SUMMARY: The Chicago District, U.S. Army Corps of Engineers, is investigating the feasibility of various methods to reduce flood damage along portions of the Upper Des Plaines River (UDPR) in Lake and Cook Counties, Illinois.

A feasibility study of the proposed action is being conducted under Congressional authority known as the Chicago-South End of Lake Michigan (C–SELM) Urban Water Damage Study Authority. This authority is contained in Section 206 of the 1958 Flood Control Act (Public Law 85–500), two resolutions by the Senate Committee on Public Works adopted 22 July 1969, and 29 March 1973, and a resolution by the House Committee on Public Works adopted 11 April 1974. The feasibility study was undertaken as a result of a formal request for a reconnaissance study by the Illinois Division of Water Resources in October 1986. The reconnaissance study was completed by the Chicago District in 1989. This study supported further Federal involvement at the feasibility stage for flood protection on the Upper Des Plaines River. The State of Illinois, Metropolitan Water Reclamation District of Greater Chicago, and Lake County Stormwater Management Commission have agreed to share the cost of the feasibility study with the Chicago District. The purpose of this feasibility study is to (1) describe and evaluate the scope of the flooding problems on the UDPR basin, (2) describe and evaluate alternative plans to resolve the flooding problems, and (3) select a recommended plan. The focus of this investigation is overbank flooding along the mainstem of the UDPR in Lake and Cook Counties, Illinois.

FOR FURTHER INFORMATION CONTACT: Questions or comments about the proposed action and DEIS should be addressed to Dr. Ken Derickson, Planning Division, Department of the Army, Corps of Engineers, 111 North Canal Street, Chicago, Illinois, 60606–7206, ATTN: CENCC–PD–S, telephone (312) 353–6475. An issues-scoping meeting is tentatively planned during the Fall of 1995.

SUPPLEMENTARY INFORMATION: The Upper Des Plaines River, located in Lake and Cook Counties of Northeastern Illinois, is subject to severe overbank flooding due to inadequate channel carrying capacity to carry peak flows during major storm events. Damaging floods, in the mostly urban watershed, have occurred several times over the past 50 years. The most recent floods, in 1986 and 1987, caused damages exceeding $100 million. Homes, commercial/industrial facilities, public/municipal sites, streets, golf courses, cemeteries, and recreational/open space areas were adversely impacted by these latter two floods in many communities along the Upper Des Plaines River. Due to the projected high rate of development along the UDPR in Lake County, damages due to flooding are expected to increase by about 50 percent over the next 50 years, if no action is taken. At the request of the State of Illinois in October 1986, the Chicago District conducted a reconnaissance study of these flooding problems along the UDPR.

During the problem identification phase of the reconnaissance study, 67 flood prone areas were identified along the mainstem of the Des Plaines River as well as 40 areas of flood prone roads/streets. Of the 67 identified flood prone areas, 17 were recommended for plan formulation, based on preliminary economic, engineering, environmental, and institutional screening criteria. Actions to be considered in the feasibility study and DEIS for these 17 flood prone areas are (1) no Federal action, (2) using exiting gravel pits for flood water storage, (3) expanding existing reservoirs, (4) excavating new reservoirs and/or wetland detention areas, (5) constructing levees, and (6) implementing non-structural alternatives (e.g., floodplain management and flood-proofing). These actions will be studied to determine those, or combinations thereof, which best meet the following objectives: reduction of flood damages to the UDPR Basin; protection and enhancement of natural, cultural and ecological resources; mitigation of project-induced impacts on these resources; maintenance or enhancement of the social well-being of the community to the maximum extent possible; minimization of any adverse impacts to existing and future development plans for the UDPR Basin; and minimization of project impacts to surrounding communities.

The DEIS is tentatively scheduled to be available for public review in April 1996.

Gregory D. Showalter,

Army Federal Register Liaison Officer.

[FR Doc. 95–21324 Filed 8–28–95; 8:45 am]

BILLING CODE 3710–HN–M

Availability of Non-Exclusive, Exclusive, or Partially Exclusive Licensing of U.S. Patent Application Concerning Protective Peptides of Neurotoxin of C. Botulinum

AGENCY: U.S. Army Medical Research and Material Command, DoD.

ACTION: Notice.

SUMMARY: In accordance with 37 CFR 404.6, announcement is made of the availability of U.S. Patent Application SN 08/446,114, entitled ''Protective Peptides of Neurotoxin of C. Botulinum,'' and filed May 19, 1995, for licensing. This patent has been assigned to the United States Government as Represented by the Secretary of the Army.

ADDRESSES: Commander, U.S. Army Medical Research and Materiel Command, ATTN: Command Judge Advocate, Fort Detrick, Maryland 21702–5012.

FOR FURTHER INFORMATION CONTACT: Mr. John F. Moran, Patent Attorney, 301–619–2065 or telefax 301–619–7714.

SUPPLEMENTARY INFORMATION: A plasmid-based expression vector has been constructed for genetic fusion of antigenic peptides to cholera toxin, which is predicted to eliminate many of the problems associated with direct conjugation of large proteins to the B subunit of this protein. Cholera toxin fusion proteins can be used to improve the immunogenicity of any vaccine and allow immunization by any number of different routes. These fusion proteins may also aid in the treatment of autoimmune disorders by inducing oral tolerance to the target antigen conjugated to cholera toxin. The described methods allows bacterial expression of fusion protein in sufficient quantities for vaccine and diagnostic use.

Gregory D. Showalter,

Army Federal Register Liaison Officer.

[FR Doc. 95–21323 Filed 8–28–95; 8:45 am]

BILLING CODE 3710–08–M

Department of the Navy

Availability of Invention for Licensing

The invention listed below is assigned to the United States Government as represented by the Secretary of the Navy and is available for licensing by the Department of the Navy.

Requests for copies of the patent application cited should be directed to the Office of Naval Research, ONR OOCC, Ballston Tower One, 800 North Quincy Street, Arlington, Virginia 22217–5660 and must include the Navy Case Number.

For further information contact: Mr. R.J. Erickson, Staff Patent Attorney, Office of Naval Research, ONR OOCC, 800 North Quincy Street, Arlington, Virginia 22217–5660, telephone (703) 696–4001.

Patent Application entitled ''CONTROLLED RELEASE OF ACTIVE AGENT USING INORGANIC TUBULES''; filed 31 July 1995, Navy Case No. 76,652.

Dated: August 21, 1995.

M.A. Waters,

LCDR, JAGC, USN, Federal Register Liaison Officer.

[FR Doc. 95–21417 Filed 8–28–95; 8:45 am]

BILLING CODE 3810–AE–M

Intent to Grant Partially Exclusive Patent License; Benthos, Inc.

The Department of the Navy hereby gives notice of its intent to grant to Benthos, Inc., a revocable, nonassignable, partially exclusive license in the United States to practice the Government owned invention described in U.S. Patent Application Serial No. 08/321,066 ''Bioluminescent Bioassay System,'' filed 11 October 1994.

Anyone wishing to object to the grant of this license has 60 days from the date of this notice to file written objections along with supporting evidence, if any. Written objections are to be filed with the Office of Naval Research, ONR OOCC, Ballston Tower One, Arlington, Virginia 22217–5660.

For Further Information Contact: Mr. R.J. Erickson, Staff Patent Attorney, Office of Naval Research, ONR OOCC, Ballston Tower One, 800 North Quincy Street, Arlington, Virginia 22217–5660, telephone (703) 696–4001.

Dated: August 21, 1995.

M.A. Waters,

LCDR, JAGC, USN, Federal Register Liaison Officer.

[FR Doc. 95–21418 Filed 8–28–95; 8:45 am]

BILLING CODE 3810–AE–M

Notice of Performance Review Board Membership

Pursuant to 5 U.S.C. 4314 (c) (4), the Department of the Navy (DON) announces the appointment of members to the DON's numerous Senior Executive Service (SES) Performance Review Boards (PRBs). The purpose of the PRBs is to provide fair and impartial review of the annual SES performance appraisal prepared by the senior executive's immediate and second level supervisor; to make recommendations to appointing officials regarding acceptance or modification of the performance rating; and to make recommendations for monetary performance awards. Composition of the specific PRBs will be determined on an ad hoc basis from among individuals listed below:

AKIN, M. G. MR.
ALTWEGG, D. M. MR.
ANDERSON, J. BGEN
ANGRIST, E. P. MR.
ATKINS, J. A. MR.
BAILEY, D. C. MR.
BISSON, A. DR.
BLATSTEIN, I. M. DR.
BRABHAM, J. A. LTGEN
BRADLEY, L. A. MS.
BRANCH, E. B. MR.
BRANT, D. L. MR.

BREEDLOVE, W. J. DR.
BROOKE, R. K. MR.
BUONACCORSI, P. P. MR.
CAMP, J. R. MR.
CASSIDY, R. CAPT
CASSIDY, W. J. MR.
CATALDO, P. R. MR.
CHRISTMAS, G. R. LTGEN
CLARK, C. C. MS.
COCCHIOLA, M. J. MR.
COFFEY, T. DR.
COMMONS, G. L. MS.
CONRAN, T. C. MR.
CRAINE, J. W. RADM
CUDDY, J. V. MR.
CZELUSNIAK, D. P. MR.
DAVIS, J. R. DR.
DECORPO, J. DR.
DESALME, J. W. MR.
DILLON, B. L. MR.
DILWORTH, G. C. MR.
DISTLER, D. MR.
DIXSON, H. L. MR.
DOAK, R. MR.
DOHERTY, L. M. DR.
DOMINGUEZ, M. L. MR.
DONALSON, E. L. MR.
DOUGLASS, T. E. MR.
DRAIM, R. P. MR.
DUDDLESTON, R. J. MR.
DURHAM, D. L. DR.
EATON, W. D. MR.
ELLIOTT, R. D. MR.
EYER, J. W. MR.
FELTON, R. M. MR.
FELTON, L. A. RADM
FIOCCHI, T. C. MR.
FORD, F. B. MR.
FORSSELL, A. G. MR.
FRICK, R. E. RADM
GARVERT, W. C. MR.
GEIGER, C. G. MR.
GOLDSCHMIDT, J. X. MR.
GOTTFRIED, J. MS.
GROSSMAN, J. C. MR.
GUERTIN, J .R. DR.
GUNDERSON, E. K. DR.
HANCOCK, W. J. RADM
HANNAH, B. W. DR.
HARMAN, D. P. MR.
HARRISON, Y. M. MS.
HARTWIG, E. DR.
HATHAWAY, D. L. MR.
HAUENSTEIN, W. H. MR.
HAUT, D. G. MR.
HAYNES, R. S. MR.
HEATH, K. S. MS.
HENRY, M. G. MR.
HICKMAN, D. E. RADM
HICKS, S. N. MR.
HILDEBRANDT, A. H. MR.
HINKLE, J. B. RADM
HOLADAY, D. A. MR.
HOOD, J. T. RADM
HOWELL, D. S. MS.
HUBBELL, P. C. MR.
HUCHTING, G. A. RADM
JOHNSTON, K. J. DR.
JUNKER, B. DR.
KANDARAS, C. A. MS.
KASKIN, J. D. MR.
KELLY, L. J. MR.
KILL KELLEY, J. L. MR.
KISS, R. K. MR.
KNUDSEN, R. E. DR.
KOTZEN, P. S. MS.
KRASIK, S. A. MR.
KREITZER, L. P. MR.
KUESTERS, J. J. MR.
LANGSTON, M. J. MR.
LARSEN, D. P. MR.
LEACH, R. A. MR.
LEFANDE, R. DR.
LETOW, A. M. MR.
LEWIS, R. D. MS.
LOPATA, F. A. MR.
LUNDBERG, L. L. MR.
LYNCH, J. G. MR.
MACHIN, R. C. MR.
MARTIN, R. J. MR.
MASCIARELLI, J. R. MR.
MATTHEIS, W. G. MR.
MCBURNETT, G. M. MS.
MCELENY, J. F. MR.
MCGADNEY, R. L. MR.
MCMANUS, C. J. MR.
MCNAIR, J. W. MR.
MCNAIR, S. M. MR.
MELIA, F. M. MR.
MELETZKE, D. M. MS.
MERRITT, M. M. MR.
MESSEROLE, M. MR.
MILLER, G. O. MR.
MOELLER, R. L. RADM
MOLZAHN, W. R. MR.
MONTGOMERY, H. E. MR.
MUNSELL, E. L. MS.
MUNSON, M. MR.
MURPHY, P. M. MR.
MUTH, C. C. MS.
NANOS, G. P. RADM
NATHAN, H. J. MR.
NEDROW, R. D. MR.
NEMFAKOS, C. P. MR.
NICKELL, J. R. MR.
OLSEN, M. A. MS.
O'NEILL, T. J. MR.
OSTER, J. W. MAJGEN
PALAEZ, M. RADM
PANEK, R. L. MR.
PAULK, R. D. MS.
PAYNE, T. MR.
PENNISI, R. A. MR.
PETERS, R. K. MS.
PHELPS, F. A. MR.
PHILLIPS, G. P. RADM
PORTER, D. E. MR.
PORTER, T. J. RADM
PRICE, R. W. MR.
POWERS, B. F. MR.
QUESTER, K. A. MS.
RATH, BHAKTA DR.
RATHJEN, R. A. MR.
RENFRO, J. G. MR.
RICHWINE, D. A. MAJGEN
RIEGEL, K. W. DR.
ROBINSON, B. DR.
ROBINSON, P. M. RADM
ROBINSON, W. M. MR.
ROTH, J. MR.
RYZEWIC, W. H. MR.
SAALFELD, F. DR.
SANDERS, W. R. MR.
SANSONE, W. MR.
SARGENT, D. P. RADM
SAUL, E. L. MR.
SAVITSKY, W. D. MR.
SCHAEFER JR., W. J. MR.
SCHNEIDER, P. A. MR.
SCHULTZ, R. E. MR.
SCHUSTER, J. G. MR.
SCOTT, R. CAPT
SHAFFER, R. L. MR.
SHOUP, F. E. DR.
SILVA, E. DR.
SIRMALIS, J. E. DR.
SOMOROFF, A. R. DR.
STINE, J. E. MR.
STRONG, B. D. RADM.
STUSSIE, W. A. MR.
SULLIVAN, M. P. RADM
THOMAS, R. O. MR.
THOMPSON, R. H. MR.
THORNETT, R. MR.
TINSTON, W. J. RADM
TISONE, A. A. MR.
TOMPKINS, C. L. MR.
TURNQUIST, C. J. MR.
UHLER, D. G. DR.
VAN RIPER, P. K. LTGEN
VERKOSKI, J. E. MR.
WILLIAMS, R. D. RADM
WESSEL, P. R. MR.
WHALEN, J. R. MR.
WHITEWAY, R. N. DR.
WHITMAN, E. C. DR.
WHITTEMORE, A. L. MS.
WILSON, T. RADM
WYANT, F. E. MR.
YOUNG, S. D. MS.
ZANFAGNA, P. E. MR.
ZDANKIEWICZ, E. MR.
ZIMET, E. DR.
ZORNETZER, S. DR.

Dated: August 21, 1995.

M.A. Waters,

LCDR, JAGC, USN, Federal Register Liaison Officer.

[FR Doc. 95–21429 Filed 8–28–95; 8:45 am]

BILLING CODE 3810–FF–P

DEPARTMENT OF ENERGY

Environmental Management Advisory Board

AGENCY: Department of Energy.

ACTION: Notice of open meeting.

SUMMARY: Pursuant to the provisions of the Federal Advisory Committee Act (Public Law 92–463, 86 Stat. 770), notice is hereby given of the following Advisory Committee meeting:

Name: Environmental Management Advisory Board.

Date and Times: Thursday, September 14, 1995; 9 a.m.–5 p.m.

Place: Crystal City Marriott Hotel, 1999 Jefferson Davis Highway, Arlington, VA 22202, (703) 413–5500

FOR FURTHER INFORMATION CONTACT: James T. Melillo, Executive Director, Environmental Management Advisory Board, EM–5, 1000 Independence Avenue, SW., Washington, DC 20585, (202) 586–4400. The Internet address is: James.Melillo@em.doe.gov

SUPPLEMENTARY INFORMATION:

Purpose of the Board

The purpose of the Board is to provide the Assistant Secretary for Environmental Management (EM) with advice and recommendations on issues confronting the Environmental Management program and the Programmatic Environmental Management Impact Statement, from the perspectives of affected groups and State and local Governments. The Board will help to improve the Environmental Management Program by assisting in the process of securing consensus recommendations, and providing the Department's numerous publics with opportunities to express their opinions regarding the Environmental Management Program.

Tentative Agenda

Thursday, September 14, 1995

9 a.m.—Co-Chairmen Open Public Meeting.
Mr. Alvin Alm and Mr. Douglas Costle
9:05 a.m.—Opening Remarks.
Mr. Thomas Grumbly, Assistant Secretary for Environmental Management
10:30 a.m.—Presentation and Board Discussion of the Technology Development and Transfer Committee Findings.
Dr. Edgar Berkey, Committee Chair
11:35 a.m.—Discussion of Board Business.
Mr. Alvin Alm and Mr. Douglas Costle
12 p.m.—Lunch.
1 p.m.—Presentation and Board Discussion of Budget Committee Findings.
Mr. Alvin Alm
1:45 p.m.—Presentation and Discussion of NEPA Committee Findings.
Mr. Brian Costner, Committee Chair
2:30 p.m.—Progress Report—Worker Health and Safety Committee.
Dr. Glenn Paulson
2:50 p.m.—Progress Report—Formerly Utilized Sites Remedial Action Program (FUSRAP)
3:30 p.m.—Board Discussion
4:30 p.m.—Public Comment Session.
5 p.m.—Meeting Adjourns.

A final agenda will be available at the meeting.

Public Participation

The meeting is open to the public. Written statements may be filed with the Board either before or after the meeting. Members of the public who wish to make oral statements pertaining to agenda items should either contact James T. Melillo at the address or telephone number listed above, or call 1(800) 736–3282, the Center for Environmental Management Information and register to speak during the public comment session of the meeting. Individuals may also register on September 14, 1995 at the meeting site. Every effort will be made to hear all those wishing to speak to the Board, on a first come, first serve basis. Those who call in and reserve time will be given the opportunity to speak first. The Board Co-Chairs are empowered to conduct the meeting in a fashion that will facilitate the orderly conduct of business.

Transcripts and Minutes

A meeting transcript and minutes will be available for public review and copying at the Freedom of Information Public Reading Room, 1E–190, Forrestal Building, 1000 Independence Avenue, S.W., Washington, DC 20585 between 9 a.m. and 4 p.m., Monday through Friday, except Federal holidays.

Issued at Washington, DC, on August 23, 1995.

Rachel Murphy Samuel,

Acting Deputy Advisory Committee Management Officer.

[FR Doc. 95–21419 Filed 8–28–95; 8:45 am]

BILLING CODE 6450–01–P

Federal Energy Regulatory Commission

[Docket No. CP95–565–000]

Equitrans, Inc.; Notice of Technical Conference

August 23, 1995.

Take notice that a technical conference has been scheduled in the above-captioned proceeding for 10 a.m. on September 15, 1995, at the offices of the Federal Energy Regulatory Commission, 810 First Street, NE., Washington, DC 20426. The purpose of the conference is to discuss matters of interest and concern relating to Equitrans, Inc.'s proposal to replace a portion of the cushion natural gas from its Shirley Storage Reservoir with nitrogen, including Equitrans' proposal that its application be conditioned upon (1) continued rate treatment of the reservoir; and (2) clarification that Equitrans will (a) bear the risk of loss on the sale of the produced gas, and (b) be permitted to retain revenues on such sales that may be in excess of the book costs. All interested parties are invited to attend. For additional information, interested parties may call Michael J. McGehee at (202) 208–2257.

Lois D. Cashell,

Secretary.

[FR Doc. 95–21339 Filed 8–28–95; 8:45 am]

BILLING CODE 6717–01–M

[Docket Nos. RP95–326–003 and RP95–242–004]

Natural Gas Pipeline Co. of America; Notice of Proposed Changes in FERC Gas Tariff

August 23, 1995.

Take notice that on August 18, 1995, Natural Gas Pipeline Company of America (Natural), tendered for filing as part of its FERC Gas Tariff, Sixth Revised Volume No. 1, First Revised Sheet No. 204A with a proposed effective date of September 1, 1995. This sheet is being revised to modify the currently effective rules for transition to new services, to allow continuation of existing Agreements under Rate Schedule FSS.

Natural is also submitting *pro forma* tariff sheets as part of its FERC Gas Tariff, Sixth Revised Volume No. 1 and Second Revised Volume No. 2, related to Natural's proposed Pro Forma Case filed in the referenced dockets. Natural has not reflected an effective date on these *pro forma* tariff sheets but is renewing its request that the Commission allow the Pro Forma Case to go into effect as of December 1, 1995.

Natural states that the purpose of the filing is to comply with the Commission's June 26, 1995, order in Docket Nos. RP95–326–000 and RP95–242–000 which required Natural to submit a new pro forma version of its restructured services, revised to respond to the concerns raised at the technical conferences and with rates reflecting the customers' August 1 service elections.

Natural states that due to the significant fly-up in maximum rates created by these changes, it is proposing a deferred cost procedure to avoid such rate increases.

Natural requested waiver of the Commission's Regulations to the extent necessary to permit the tariff sheets to become effective September 1, 1995 and December 1, 1995.

Natural states that copies of the filing are being mailed to Natural's

jurisdictional customers, interested state regulatory agencies and all parties on the official service list.

As agreed by the parties at the August 3, 1995, technical conference, parties will address the *pro forma* tariff sheets in initial comments to be filed August 30, 1995 (in-hand date) and reply comments to be filed September 8, 1995.

Any person desiring to protest Sixth Revised Volume No. 1, First Revised Sheet No. 204A should file a protest with the Federal Energy Regulatory Commission, 825 North Capitol Street, N.E., Washington, DC 20426, in accordance with Section 385.211 of the Commission's Rules and Regulations. All such protests should be filed on or before August 30, 1995. Protests will be considered by the Commission in determining the appropriate action to be taken, but will not serve to make protestants parties to the proceeding. Copies of this filing are on file with the Commission and are available for public inspection in the Public Reference Room.

Lois D. Cashell,

Secretary.

[FR Doc. 95–21334 Filed 8–28–95; 8:45 am]

BILLING CODE 6717–01–M

[Docket No. PR95–17–000]

Olympic Pipeline Co.; Notice of Petition for Rate Approval

August 23, 1995.

Take notice that on August 4, 1995, Olympic Pipeline Company (Olympic), filed pursuant to Section 284.123(b)(2) of the Commission's Regulations, a petition for rate approval requesting that the Commission approve as fair and equitable a firm transportation reservation charge of $2.5222 per MMBtu and a 100 percent load factor interruptible transportation charge of $0.08292 per MMBtu for transportation services performed by Olympic through its Cajun system under Section 311(a)(2) of the Natural Gas Policy Act of 1978 (NGPA).

Olympic states that it is an intrastate pipeline within the meaning of Section 2(16) of the NGPA and it owns and operates an intrastate pipeline system in the State of Louisiana. Olympic proposes an effective date of August 4, 1995.

Pursuant to Section 284.123(b)(2)(ii), if the Commission does not act within 150 days of the filing date, the rate will be deemed to be fair and equitable and not in excess of an amount which interstate pipelines would be permitted to charge for similar transportation service. The Commission may, prior to the expiration of the 150-day period, extend the time for action or institute a proceeding to afford parties an opportunity for written comments and for the oral presentation of views, data, and arguments.

Any person desiring to participate in this rate proceeding must file a motion to intervene in accordance with Sections 385.211 and 385.214 of the Commission's Rules of Practice and Procedures. All motions must be filed with the Secretary of the Commission on or before August 31, 1995. The petition for rate approval is on file with the Commission and is available for public inspection.

Lois D. Cashell,

Secretary.

[FR Doc. 95–21335 Filed 8–28–95; 8:45 am]

BILLING CODE 6717–01–M

[Docket No. PR95–16–000]

Olympic Pipeline Co., Notice of Petition for Rate Approval

August 23, 1995.

Take notice that on August 4, 1995, Olympic Pipeline Company (Olympic), filed pursuant to Section 284.123(b)(2) of the Commission's Regulations, a petition for rate approval requesting that the Commission approve as fair and equitable a firm transportation reservation charge of $1.6217 per MMBtu and a 100 percent load factor interruptible transportation charge of $0.05332 per MMBtu for transportation services performed by Olympic through its Manchester system under Section 311(a)(2) of the Natural Gas Policy Act of 1978 (NGPA).

Olympic states that it is an intrastate pipeline within the meaning of Section 2(16) of the NGPA and it owns and operates an intrastate pipeline system in the State of Louisiana. Olympic proposes an effective date of August 4, 1995.

Pursuant to Section 284.123(b)(2)(ii), if the Commission does not act within 150 days of the filing date, the rate will be deemed to be fair and equitable and not in excess of an amount which interstate pipelines would be permitted to charge for similar transportation service. The Commission may, prior to the expiration of the 150-day period, extend the time for action or institute a proceeding to afford parties an opportunity for written comments and for the oral presentation of views, data, and arguments.

Any person desiring to participate in this rate proceeding must file a motion to intervene in accordance with Sections 385.211 and 385.214 of the Commission's Rules of Practice and Procedures. All motions must be filed with the Secretary of the Commission on or before August 31, 1995. The petition for rate approval is on file with the Commission and is available for public inspection.

Lois D. Cashell,

Secretary.

[FR Doc. 95–21336 Filed 8–28–95; 8:45 am]

BILLING CODE 6717–01–M

Sonat Power Marketing Inc.; Notice of Issuance of Order

[Docket No. ER95–1050–000]

August 24, 1995.

On May 16, 1995, as amended June 13, 1995, Sonat Power Marketing Inc. (SPM) submitted for filing a rate schedule under which SPM will engage in wholesale electric power and energy transactions as a marketer. SPM also requested waiver of various Commission regulations. In particular, SPM requested that the Commission grant blanket approval under 18 CFR Part 34 of all future issuances of securities and assumptions of liability by SPM.

On August 18, 1995, pursuant to delegated authority, the Director, Division of Applications, Office of Electric Power Regulation, granted requests for blanket approval under Part 34, subject to the following:

Within thirty days of the date of the order, any person desiring to be heard or to protest the blanket approval of issuances of securities or assumptions of liability by SPM should file a motion to intervene or protest with the Federal Energy Regulatory Commission, 825 North Capitol Street, N.E., Washington, DC 20426, in accordance with Rules 211 and 214 of the Commission's Rules of Practice and Procedure (18 CFR 385.211 and 385.214).

Absent a request for hearing within this period, SPM is authorized to issue securities and assume obligations or liabilities as a guarantor, indorser, surety, or otherwise in respect of any security of another person; provided that such issuance or assumption is for some lawful object within the corporate purposes of the applicant, and compatible with the public interest, and is reasonably necessary or appropriate for such purposes.

The Commission reserves the right to require a further showing that neither public nor private interests will be adversely affected by continued approval of SPM's issuances of securities or assumptions of liability.

Notice is hereby given that the deadline for filing motions to intervene

or protests, as set forth above, is September 18, 1995.

Copies of the full text of the order are available from the Commission's Public Reference Branch, Room 3308, 941 North Capitol Street, NE., Washington, DC 20426.

Lois D. Cashell,

Secretary.

[FR Doc. 95–21363 Filed 8–28–95; 8:45 am]

BILLING CODE 6717–01–M

[Docket No. ER95–1334–000]

Stalwart Power Co.; Notice of Issuance of Order

August 24, 1995.

On July 3, 1995, as amended on July 21, 1995, Stalwart Power Company (Stalwart) submitted for filing a rate schedule under which Stalwart will engage in wholesale electric power and energy transactions as a marketer. Stalwart also requested waiver of various Commission regulations. In particular, Stalwart requested that the Commission grant blanket approval under 18 CFR Part 34 of all future issuances of securities and assumptions of liability by Stalwart.

On August 18, 1995, pursuant to delegated authority, the Director, Division of Applications, Office of Electric Power Regulation, granted requests for blanket approval under Part 34, subject to the following:

Within thirty days of the date of the order, any person desiring to be heard or to protest the blanket approval of issuances of securities or assumptions of liability by Stalwart should file a motion to intervene or protest with the Federal Energy Regulatory Commission, 825 North Capitol Street, N.E., Washington, D.C. 20426, in accordance with Rules 211 and 214 of the Commission's Rules of Practice and Procedure (18 CFR 385.211 and 385.214).

Absent a request for hearing within this period, Stalwart is authorized to issue securities and assume obligations or liabilities as a guarantor, indorser, surety, or otherwise in respect of any security of another person; provided that such issuance or assumption is for some lawful object within the corporate purposes of the applicant, and compatible with the public interest, and is reasonably necessary or appropriate for such purposes.

The Commission reserves the right to require a further showing that neither public nor private interests will be adversely affected by continued approval of Stalwart's issuances of securities or assumptions of liability.

Notice is hereby given that the deadline for filing motions to intervene or protests, as set forth above, is September 18, 1995.

Copies of the full text of the order are available from the Commission's Public Reference Branch, Room 3308, 941 North Capitol Street, N.E. Washington, D.C. 20426.

Lois D. Cashell,

Secretary.

[FR Doc. 95–21362 Filed 8–28–95; 8:45 am]

BILLING CODE 6717–01–M

[Docket No. CP95–691–000]

Tennessee Gas Pipeline Co.; Notice of Request Under Blanket Authorization

August 23, 1995.

Take notice that on August 17, 1995, Tennessee Gas Pipeline Company (Tennessee), P.O. Box 2511, Houston, Texas 77252, filed in Docket No. CP95–691–000 a request pursuant to Sections 157.205 and 157.216 of the Commission's Regulations under the Natural Gas Act (18 CFR 157.205, 157.216) for authorization to abandon by removal a sales tap and meter facility located in Madison County, Kentucky under Tennessee's blanket certificate issued in Docket No. CP82–413–000 pursuant to Section 7 of the Natural Gas Act, all as more fully set forth in the request that is on file with the Commission and open to public inspection.

Tennessee proposes to abandon by removal the facility at the Richmond Emergency Sales Meter Station No. 2–0503 located in Madison County, Kentucky. Tennessee states that the sales meter station was placed in service in November, 1970 to be used as an emergency delivery point on Tennessee's system to provide backup protection for natural gas service Columbia Gas Transmission Corporation (Columbia) (formerly United Fuel Gas Company) was rendering in the Lexington, Kentucky area. Tennessee states that this facility has been inactive since March, 1988. Columbia, the only customer served by the facility prior to the meter becoming inactive, consented to the abandonment and removal by signature dated July 12, 1995.

Any person or the Commission's staff may, within 45 days after issuance of the instant notice by the Commission, file pursuant to Rule 214 of the Commission's Procedural Rules (18 CFR 385.214) a motion to intervene or notice of intervention and pursuant to Section 157.205 of the Regulations under the Natural Gas Act (18 CFR 157.205) a protest to the request. If no protest is filed within the time allowed therefor, the proposed activity shall be deemed to be authorized effective the day after the time allowed for filing a protest. If a protest is filed and not withdrawn within 30 days after the time allowed for filing a protest, the instant request shall be treated as an application for authorization pursuant to Section 7 of the Natural Gas Act.

Lois D. Cashell,

Secretary.

[FR Doc. 95–21338 Filed 8–28–95; 8:45 am]

BILLING CODE 6717–01–M

[Projects Nos. 2404–017 & 2419–007—Michigan]

Thunder Bay Power Co.; Notice of Intention to Hold Project Site Visit

August 23, 1995.

Thunder Bay Power Company (applicant) filed on December 30, 1991, a new license application to continue to operate and maintain its Thunder Bay and Hillman Hydro Projects located on the Thunder Bay River in Alpena, Alcona, and Montmorency Counties, Michigan. The applicant has requested that the Commission combine the two licensed projects into a new license.

The Thunder Bay and Hillman Hydro Project as presently licensed consists of the following:

A. Thunder Bay Hydro Project FERC No. 2404

This project consists of the following five developments:

The Ninth Street Development which includes: (1) An existing retaining wall, 6 feet high by 285 feet long; (2) an existing buttressed retaining wall, 145 feet long; (3) an existing abandoned fishway; (4) an existing concrete uncontrolled spillway section, 47 feet long; (5) an existing gated spillway section, 131 feet long, containing seven tainter gates, each 14 feet long by 12 feet high; (6) an existing concrete gravity non-overflow section, 47 feet long; (7) an existing reinforced concrete non-overflow section (a retaining wall about 20 feet long); (8) an existing reservoir with a surface area of 700 acres and a total storage volume of 6,000 acre-feet at the normal maximum surface elevation of 598.5 feet NGVD; (9) an existing reinforced concrete and masonry powerhouse, 92 feet long by 84 feet wide, containing (a) three horizontal shaft Sampson runner turbines with a combined hydraulic capacity of 1620 cfs, manufactured by James Leffel Company and rated at 600 hp each, and (b) three General Electric generators, each rated at 400 kW, providing a total plant rating of 1,200 kW; and (10) existing appurtenant facilities.

The Four Mile Development which includes: (1) An existing concrete ogee spillway (constructed immediately downstream from the original rock filled timber dam), 445 feet long, topped by needle beams, containing (a) a log chute bay, and (b) an abandoned fishway bay; (2) an existing reservoir with a surface area of 90 acres and a total storage capacity of 900 acre-feet at the normal maximum surface elevation of 634.9 feet NGVD; (3) an existing concrete and masonry powerhouse, 72 feet by 72 feet, containing (a) a concrete forebay, (b) three existing horizontal shaft Sampson runner turbines with a combined hydraulic capacity of 1790 cfs, rated at 850 hp each, and (c) three existing General Electric generators, each rated at 600 kW, providing a total existing plant rating of 1,800 kW; and (4) existing appurtenant facilities.

Norway Point Development which includes: (1) Two existing earth dikes, 1,460 feet long and 500 feet long yielding a total length of 1,960 feet; (2) an existing abandoned fishway; (3) an existing beartrap gate section, 120 feet long, containing three beartrap gates, each 26 feet long by 27 feet high; (4) an existing mass concrete multiple barrel arch spillway section with removable needle beams, 320 feet long; (5) an existing reservoir with a surface area of 1,700 acres and a total storage volume of 27,550 acre-feet at the normal maximum surface elevation of 671.6 feet NGVD; (6) an existing reinforced concrete and masonry powerhouse, 86 feet long by 49 feet wide, containing (a) two vertical shaft Francis turbines with a combined hydraulic capacity of 1650 cfs, the first manufactured by Wellman-Seaver-Morgan Company and rated at 3,350 hp and the second rated at 1,400 hp, and (b) two General Electric generators, rated at 2,800 kW and 1,200 kW, providing a total point rating of 4,000 kW; and (7) existing appurtenant facilities.

Hubbard Lake Development which includes: (1) An existing reinforced concrete spillway section, 20 feet long, containing two needle beam controlled bays; (2) two existing 45 foot long earth embankment sections, each overlapped on the upstream and downstream sides with concrete wing walls extending from both sides of the spillway; (3) an existing reservoir with a surface area of 9,280 acres and a total storage volume of 57,000 acre-feet at the normal maximum surface elevation of 710.5 feet NGVD; and (4) existing appurtenant facilities.

Upper South Development which includes: (1) Two existing earth embankment sections, 220 feet long and 40 feet long for a total length of 260 feet; (2) an existing reinforced concrete spillway section, 40 feet long, containing (a) four needle beam controlled bays, and (b) concrete wing walls on the upstream and downstream sides overlapping the earth embankments on both sides of the spillway; (3) an existing reservoir with a surface area of 7,000 acres and a total storage volume of 55,000 acre-feet at the normal maximum surface elevation of 731.0 feet NGVD; (4) two proposed submersible Flygt Corporation turbines with a combined hydraulic capacity of 170 cfs, each equipped with a siphon penstock and an elbow draft tube; and (5) existing appurtenant facilities.

B. Hillman Hydro Project FERC No. 2419

This project consists of: (1) An existing earth fill section, approximately 50 feet long; (2) an existing concrete gated spillway section, approximately 38 feet long, containing (a) three needle beam controlled bays, (b) a concrete training wall extending upstream of the spillway along the right side, and (b) a reinforced concrete apron, constructed along the downstream toe of the spillway; (3) an existing non-overflow section which includes part of the Hillman grist mill house, 26 feet long, constructed of upstream and downstream concrete gravity walls with pressure grouted earth and rock fill between the two walls; (4) an existing concrete uncontrolled spillway section, 27 feet long, (formerly the intake structure of the grist mill in the early 1900's); (5) an existing non-overflow section, 20 feet long, constructed of upstream and downstream concrete gravity walls with pressure grouted earth and rock fill between the two walls; (6) an existing reservoir with a surface area of 160 acres and a total storage volume of 500 acre-feet at the normal maximum surface elevation of 747.2 feet NGVD; (7) an existing reinforced concrete and masonry powerhouse, 17 feet by 21 feet, containing (a) a vertical shaft Francis turbine with a hydraulic capacity of 270 cfs, manufactured by James Leffel Company, and (b) a vertical shaft generator, manufactured by Westinghouse and rated at 250 kW; and (8) existing appurtenant facilities.

The applicant proposes increasing capacity at the Upper South Development by 200 kW as well as increasing the capacity at the Four Mile Development by 600 kW, with the addition of three new generators, respectively. The applicant estimates that the proposed total installed project capacity would be 8.25 MW with a total average annual generation of 8.26 GWH. The dam and existing project facilities of each development are owned by the applicant. Project power would be utilized by the applicant for sale to its customers.

Project Site Visit

The Commission staff will conduct a three day project site visit of the Thunder Bay and Hillman Hydro Projects. The site meeting will be held starting at 2:00 P.M. on September 5, 1995 at the entrance of the Hillman Development and continue the next day (on September 6, 1995) at 8:00 A.M. at the Ninth Street Development, and finish on September 7, 1995 with the start at 8:30 A.M. at the Fletcher Floodwater and conclusion at 12:30 P.M. at the Hillman Development. All interested individuals, organizations, and agencies are invited to attend. All participants are responsible for their own transportation to and from the project site. For more details, interested parties should contact Patrick Murphy, FERC, at (202) 219–2659 and Steve Naugle, FERC, at (202) 219–2805, prior to the site visit date.

Lois D. Cashell,

Secretary.

[FR Doc. 95–21337 Filed 8–28–95; 8:45 am]

BILLING CODE 6717–01–M

[Docket No. ER94–890–006, et al.]

AES Power, Inc., et al.; Electric Rate and Corporate Regulation Filings

August 23, 1995.

Take notice that the following filings have been made with the Commission:

1. AES Power, Inc.

[Docket No. ER94–890–006]

Take notice that on August 3, 1995, AES Power, Inc. tendered for filing certain information as required by the Commission's letter order dated April 8, 1994. Copies of the informational filing are on file with the Commission and are available for public inspection.

2. United States Department of Energy—Western Area Power Administration (Central Valley Project)

[Docket No. EF95–5011–000]

Take notice that on August 10, 1995, the Deputy Secretary of Energy, on behalf of the Western Area Power Administration, tendered for filing an amended Rate Schedule CV–F7 pursuant to the authority delegated to the Deputy Secretary by the Secretary's Amendment No. 3 to Delegation Order No. 0204–108. The amended rate schedule is for commercial firm power from the Central Valley Project.

Comment date: September 7, 1995, in accordance with Standard Paragraph E at the end of this notice.

3. Public Service Company of New Hampshire v. New Hampshire Electric Cooperative, Inc.

[Docket No. EL95–71–000]

Take notice that on August 14, 1995, the Public Service Company of New Hampshire (PSNH) tendered for filing a complaint against the New Hampshire Electric Cooperative, Inc. (NHEC) with respect to NHEC's anticipatory breach of its wholesale partial requirements agreement with PSNH.

Comment date: September 22, 1995, in accordance with Standard Paragraph E at the end of this notice.

4. Citizens Lehman Power Sales

[Docket No. ER94–1685–004]

Take notice that on August 14, 1995, Citizens Lehman Power Sales filed certain information as required by the Commission's February 2, 1995, order in Docket No. ER94–1685. Copies of Citizens Lehman Power Sales' informational filing are on file with the Commission and are available for public inspection.

5. American Electric Power Service Corporation

[Docket No. ER95–497–001]

Take notice that on August 15, 1995, American Electric Power Service Corporation (AEPSC) amended its filing in the above referenced docket to clarify its policy regarding return-in-kind of emission allowances.

A copy of this amendment to filing was served upon the affected parties and state regulatory commissions.

Comment date: September 6, 1995, in accordance with Standard Paragraph E at the end of this notice.

6. Northern States Power Company (Minnesota) Northern States Power Company (Wisconsin)

[Docket No. ER95–503–000]

Take notice that on August 17, 1995, Northern States Power Company (Minnesota) and Northern States Power Company (Wisconsin) tendered for filing revisions to its January 30, 1995, emission allowance filing to comply with the Final Rule issued on April 26, 1995, and to be consistent with the Commission's order issued on June 2, 1995.

NSP Companies request that the Commission grant waiver of its Part 35 notice provisions and accept this amended filing effective January 1, 1995, subject to refund.

Comment date: September 6, 1995, in accordance with Standard Paragraph E at the end of this notice.

7. Southern Indiana Gas and Electric Company

[Docket No. ER95–600–000]

Take notice that on August 2, 1995, Southern Indiana Gas and Electric Company (Southern Indiana) tendered for filing Revised Amendments to Coordination Rates in its Interconnection Agreement with Alcoa Generating Corporation to Reflect the Costs of Emissions Allowances for FERC Rate Schedule No. 0029. A copy of the filing has been sent to Alcoa Generating Corporation.

The proposed Revised Amendment to the Rate Schedule is being made by an abbreviated filing under Section 205 and pursuant to the Commission's Interim Rule issued in Docket No. PL95–1–000, Regarding Ratemaking Treatment of the Cost of Emissions Allowances in Coordination Rates and provides for cost recover of SO_2 emissions allowances in energy sales. These revised amendments are limited to coordination sales tariffs contained in the Agreement and are intended to clarify provisions for the ratemaking treatment of the cost of emissions allowances under the aforementioned rate schedule.

Comment date: September 6, 1995, in accordance with Standard Paragraph E at the end of this notice.

8. Maine Public Service Company

[Docket No. ER95–836–003]

Take notice that on August 9, 1995, Maine Public Service Company tendered for filing its compliance filing in the above-referenced docket.

Comment date: September 6, 1995, in accordance with Standard Paragraph E at the end of this notice.

9. CL Power Sales One, Two, Three, Four, Five, L.L.C.

[Docket No. ER95–892–001]

Take notice that on August 14, 1995, CL Power Sales One, Two, Three, Four, Five, L.L.C. filed certain information as required by the Commission's June 8, 1995, order in Docket No. ER95–892. Copies of CL Power Sales One, Two, Three, Four, and Five, L.L.C.'s informational filing are on file with the Commission and are available for public inspection.

10. IES Utilities Inc.

[Docket No. ER95–1244–000]

Take notice that IES Utilities Inc. (IES) on August 14, 1995, tendered for filing proposed changes to amend its previous June 19, 1995 filing relating to the IES and Central Iowa Power Cooperative (CIPCO) Operating and Transmission Agreement (Agreement), Appendices 13 & 14.

The proposed changes relate to modifications of the Appendix 13 Availability Charge, Effective Date and Account Numbers.

Copies of the filing were served upon CIPCO and the Iowa Utilities Board.

Comment date: September 6, 1995, in accordance with Standard Paragraph E at the end of this notice.

11. Consolidated Edison Company of New York, Inc.

[Docket No. ER95–1283–000]

Take notice that on August 15, 1995, Consolidated Edison Company of New York, Inc. (Con Edison) tendered for filing a Revised Supplement to its Rate Schedule, Con Edison Rate Schedule FERC No. 127, a facilities agreement with the New York Power Authority (NYPA). The Supplement provides for a decrease in the monthly carrying charges. Con Edison has requested that this decrease take effect as of July 1, 1995.

Con Edison states that a copy of this filing has been served by mail upon NYPA.

Comment date: September 6, 1995, in accordance with Standard Paragraph E at the end of this notice.

12. Central Power and Light Company

[Docket No. ER95–1300–000]

Take notice that on August 4, 1995, Central Power and Light Company (CPL) submitted an amended Service Agreement, dated July 6, 1995, establishing the City of Robstown (Texas) Utility System as a customer under the terms of CPL's Coordination Sales Tariff CST–1 (''CST–1 Tariff).

CPL requests an effective date of July 6, 1995, to coincide with the date of the amended Service Agreement. Copies of this filing were served upon the City of Robstown Utility System and the Public Utility Commission of Texas.

Comment date: September 6, 1995, in accordance with Standard Paragraph E at the end of this notice.

13. Niagara Mohawk Power Corporation

[Docket No. ER95–1409–000]

Take notice that on July 26, 1995, Niagara Mohawk Power Corporation tendered for filing an amendment in the above referenced docket.

Comment date: September 6, 1995, in accordance with Standard Paragraph E at the end of this notice.

14. Northeast Utilities Service Company

[Docket No. ER95–1411–000]

Take notice that Northeast Utilities Service Company (NUSCO) on August 16, 1995, tendered an amendment to its filing in the above referenced docket. The amendment provides for an earlier requested effective date for a Service Agreement with New York Power Authority (NYPA) under the NU System Companies' Power Sales/Exchange Tariff No. 6.

NUSCO states that a copy of this filing has been mailed to NYPA.

NUSCO requests that the Service Agreement become effective on August 1, 1995.

Comment date: September 6, 1995, in accordance with Standard Paragraph E at the end of this notice.

15. Wisconsin Electric Power Company

[Docket No. ER95–1474–000]

Take notice that Wisconsin Electric Power Company (Wisconsin Electric) on August 1, 1995, tendered for filing two transmission tariffs modeled after the Commission's pro forma tariffs appended to the Notice of Proposed Rulemaking in Docket No. RM95–8–000. Wisconsin Electric also submitted unexecuted transmission service agreements for firm and non-firm service to The Wisconsin Public Power Inc. System (WPPI). Wisconsin Electric also requests that a previous unexecuted agreement with WPPI covering two firm transactions that commenced June 1, 1995 be converted from Network Contract Demand Transmission Service under the present tariff to Firm Point-to-Point Transmission Service under the applicable pro forma tariff.

Wisconsin Electric respectfully requests an effective date for each tariff of August 1, 1995, in order to replace its previous submittal in Docket No. ER95–1084–000, which was accepted for filing by order dated July 13, 1995. Wisconsin Electric authorized to state that WPPI joins in the requested effective date. Because the instant filing replaces the tariff filed in ER95–1084–000, Wisconsin Electric requests waiver of the requirements of Ordering Paragraphs A and B of that order.

Copies of the filing have been served on all parties to Dockets. ER94–1625 *et al.*, the Michigan Public Service Commission, and the Public Service Commission of Wisconsin.

Comment date: September 6, 1995, in accordance with Standard Paragraph E at the end of this notice.

16. Georgia Power Company

[Docket No. ER95–1513–000]

Take notice that on August 9, 1995, Georgia Power Company (Georgia Power) submitted for filing Amendment No. 1 to the Interchange Contract between Georgia Power and Crisp County Power Commission dated June 1, 1995. The purpose of this filing is to amend energy rates contained in the foregoing interchange contract to reflect the energy-related costs incurred by Georgia Power to ensure compliance with the Phase I sulfur dioxide emissions limitations of the Clean Air Act Amendment of 1990.

Comment date: September 6, 1995, in accordance with Standard Paragraph E at the end of this notice.

17. UtiliCorp United Inc.

[Docket No. ER95–1565–000]

Take notice that on August 17, 1995, UtiliCorp United Inc. tendered for filing on behalf of its operating division, WestPlains Energy-Kansas, a Service Agreement under its Power Sales Tariff, FERC Electric Tariff Original Volume No. 12, with *NorAm Energy Services.* The Service Agreement provides for the sale of capacity and energy by WestPlains Energy-Kansas to *NorAm Energy Services* pursuant to the tariff, and for the sale of capacity and energy by *NorAm Energy Services* to WestPlains Energy-Kansas pursuant to *NorAm Energy Services'* Rate Schedule No. 1.

UtiliCorp also has tendered for filing a Certificate of Concurrence by *NorAm Energy Services.*

UtiliCorp requests waiver of the Commission's Regulations to permit the Service Agreement to become effective in accordance with its terms.

Comment date: September 6, 1995, in accordance with Standard Paragraph E at the end of this notice.

18. UtiliCorp United Inc.

[Docket No. ER95–1566–000]

Take notice that on August 17, 1995, UtiliCorp United Inc. tendered for filing on behalf of its operating division, WestPlains Energy—Colorado, a Service Agreement under its Power Sales Tariff, FERC Electric Tariff Original Volume No. 11, with *NorAm Energy Services.* The Service Agreement provides for the sale of capacity and energy by WestPlains Energy—Colorado to *NorAm Energy Services* pursuant to the tariff, and for the sale of capacity and energy by *NorAm Energy Services* to WestPlains Energy—Colorado pursuant to *NorAm Energy Services'* Rate Schedule No. 1.

UtiliCorp also has tendered for filing a Certificate of Concurrence by *NorAm Energy Services.*

UtiliCorp requests waiver of the Commission's Regulations to permit the Service Agreement to become effective in accordance with its terms.

Comment date: September 6, 1995, in accordance with Standard Paragraph E at the end of this notice.

19. Pacific Gas and Electric Company

[Docket No. ER95–1567–000]

Take notice that on August 17, 1995, Pacific Gas and Electric Company (PG&E) tendered for filing a contract for the sale of capacity between PG&E and the City of Seattle, City Light Department (Seattle). Under this agreement, Seattle will sell PG&E 50 megawatts of capacity over two summer seasons. PG&E will return energy supplied to Seattle under that capacity within the same week, unless the parties agree that it will be purchased.

Copies of this filing have been served upon Seattle and the California Public Utilities Commission.

Comment date: September 6, 1995, in accordance with Standard Paragraph E at the end of this notice.

20. Montana Power Company

[Docket No. ER95–1568–000]

Take notice that on August 17, 1995, the Montana Power Company (Montana) tendered for filing with the Federal Energy Regulatory Commission pursuant to 18 CFR 35.13, a Form of Service Agreement with Koch Power Services, Inc. (KPSI) under FERC Electric Tariff, Second Revised Volume No. 1, a revised Index of Purchasers under said Tariff, and a Certificate of Concurrence from KPSI.

A copy of the filing was served upon KPSI.

Comment date: September 6, 1995, in accordance with Standard Paragraph E at the end of this notice.

21. Entergy Power, Inc.

[Docket No. ER95–1569–000]

Take notice that Entergy Power, Inc. (EPI) on August 17, 1995, tendered for filing an Interchange Agreement with Alabama Electric Cooperative, Inc.

EPI requests an effective date for the Interchange Agreement that is one (1) day after the date of filing, and respectfully requests waiver of the notice requirements specified in Section 35.11 of the Commission's Regulations.

Comment date: September 6, 1995, in accordance with Standard Paragraph E at the end of this notice.

22. Entergy Power, Inc.

[Docket No. ER95–1570–000]

Take notice that Entergy Power, Inc. (EPI) on August 17, 1995 tendered for filing a contract with the Southeastern Power Administration.

EPI requests an effective date for the Contract that is one (1) day after the date of filing, and respectfully requests waiver of the notice requirements specified in Section 35.11 of the Commission's Regulations.

Comment date: September 6, 1995, in accordance with Standard Paragraph E at the end of this notice.

23. Boyd Rosene & Associates, Inc.

[Docket No. ER95–1572–000]

Take notice that on August 17, 1995, Boyd Rosene & Associates, Inc. (Boyd Rosene) petitioned the Commission for (1) blanket authorization to sell electricity at market-based rates; (2) a disclaimer of jurisdiction over Boyd Rosene's power brokering activities; (3) acceptance of Boyd Rosene's Rate Schedule FERC No. 1; (4) waiver of certain Commission Regulations; and (5) such other waivers and authorizations as have been granted to other power marketers, all as more fully set forth in Boyd Rosene's petition on file with the Commission.

Boyd Rosene states that it intends to engage in electric power transactions as a broker and as a marketer. In transactions where Boyd Rosene acts as a marketer, it proposes to make such sales on rates, terms and conditions to be mutually agreed to with purchasing parties.

Comment date: September 8, 1995, in accordance with Standard Paragraph E at the end of this notice.

24. Citizens Lehman Power Sales

[Docket No. ER95–1573–000]

Take notice that on August 17, 1995, Citizens Lehman Power Sales (CL Sales) submitted for filing its amended electric service tariff, FERC Rate Schedule No. 1. The amendment would authorize sales to any affiliate having a FERC rate schedule permitting sales for resale by such affiliate at rates established by agreement between the purchaser and the affiliate. CL Sales requests an effective date of September 1, 1995.

Comment date: September 8, 1995, in accordance with Standard Paragraph E at the end of this notice.

25. Central Power and Light Company West Texas Utilities Company

[Docket No. ER95–1574–000]

Take notice that on August 17, 1995, Central Power and Light Company (CPL) and West Texas Utilities Company (WTU), submitted for filing an executed Transmission Service Agreement between CPL and Lower Colorado River Authority (LCRA) and an executed Transmission Service Agreement between WTU and LCRA (Service Agreement). Under the Service Agreements, CPL and WTU will transmit power and energy purchased by LCRA from the Texas Wind Power Project. CPL and WTU request that the Service Agreements be accepted to become effective as of August 18, 1995, and have therefore asked the Commission to waive its notice requirements.

Copies of the filing were served on LCRA and the Public Utility Commission of Texas.

Comment date: September 8, 1995, in accordance with Standard Paragraph E at the end of this notice.

Standard Paragraph

E. Any person desiring to be heard or to protest said filing should file a motion to intervene or protest with the Federal Energy Regulatory Commission, 825 North Capitol Street, N.E., Washington, D.C. 20426, in accordance with Rules 211 and 214 of the Commission's Rules of Practice and Procedure (18 CFR 385.211 and 18 CFR 385.214). All such motions or protests should be filed on or before the comment date. Protests will be considered by the Commission in determining the appropriate action to be taken, but will not serve to make protestants parties to the proceeding. Any person wishing to become a party must file a motion to intervene. Copies of this filing are on file with the Commission and are available for public inspection.

Lois D. Cashell,

Secretary.

[FR Doc. 95–21364 Filed 8–28–95; 8:45 am]

BILLING CODE 6717–01–P

[Docket No. EG95–80–000, et al.]

Los Amigos Leasing Company, Ltd., et al.; Electric Rate and Corporate Regulation Filings

August 22, 1995.

Take notice that the following filings have been made with the Commission:

1. Los Amigos Leasing Company Ltd.

[Docket No. EG95–80–000]

On August 16, 1995, Los Amigos Leasing Company Ltd. (Los Amigos) (c/o Kelly A. Tomblin, Esq., Energy Initiatives, Inc., One Upper Pond Road, Parsippany, NJ 07054) filed with the Federal Energy Regulatory Commission (Commission) an application for determination of exempt wholesale generator status pursuant to Part 365 of the Commission's Regulations. Los Amigos states that its sole business purpose is to acquire and own certain electric generating equipment and to lease that equipment to Termobarranquilla S.A., Empresa de Servicios Publicos (TEBSA). Los Amigos further states that the equipment will form part of the Termobarranquilla generating facility (Facility) near Barranquilla, Colombia, which will be owned and operated by TEBSA.

Comment date: September 11, 1995, in accordance with Standard Paragraph E at the end of this notice. The Commission will limit its consideration of comments to those that concern the adequacy or accuracy of the application.

2. Sierra Pacific Power Company

[Docket No. EL95–69–000]

Take notice that on August 4, 1995, Sierra Pacific Power Company tendered for filing tariff revisions in compliance with the Commission order issued on June 5, 1995 in Docket No. FA93–20–000.

Comment date: September 12, 1995, in accordance with Standard Paragraph E at the end of this notice.

3. Duke Power Company

[Docket No. EL95–73–000]

Take notice that on August 14, 1995, Duke Power Company (Duke) filed a request for a waiver of the Commission's fuel adjustment clause regulations to permit the recovery of the costs of buying out a coal contract. Duke requests that the revised fuel clause, which provides for the buyout, be made effective on September 1, 1995.

Comment date: September 12, 1995, in accordance with Standard Paragraph E at the end of this notice.

4. Electric Clearinghouse, Inc.

[Docket No. ER94–968–008]

Take notice that on July 31, 1995, Electric Clearinghouse Inc. filed certain information as required by the Commission's April 7, 1994, order in Docket No. ER94–968–000. Copies of Electric Clearinghouse's informational filing are on file with the Commission and are available for public inspection.

5. Hadson Electric, Inc.

[Docket No. ER94–1613–003]

Take notice that on August 8, 1995, Hadson Electric, Inc. filed certain information as required by the Commission's November 17, 1994, order in Docket No. ER94–1613–000. Copies of Hadson Electric's informational filing

are on file with the Commission and are available for public inspection.

6. Arizona Public Service Company

[Docket Nos. ER95–1210–000]

Take notice that the Notice of Filing issued in the above-referenced docket on August 9, 1995, should be rescinded.

7. Public Service Company of Colorado and Cheyenne Light, Fuel and Power Company

[Docket No. ER95–1268–000]

Take notice that on August 18, 1995, Public Service Company of Colorado (Public Service) tendered for filing amendments to its Point-to-Point Transmission Service Tariff and Network Integration Transmission Service Tariff (Public Service Tariffs). The Public Service Tariffs were originally filed on June 26, 1995. Public Service states that on behalf of its subsidiary Cheyenne Light, Fuel and Power Company (Cheyenne), Public Service has also enclosed for filing Cheyenne's Point-to-Point Transmission Service Tariff and Network Integration Transmission Service Tariff (Cheyenne Tariffs). Public Service requests that the Public Service Tariffs and the Cheyenne Tariffs be made effective on August 25, 1995 (the date Public Service originally requested that the Public Service Tariffs be made effective), or as soon thereafter as possible, but no later than October 18, 1995.

Comment date: September 5, 1995, in accordance with Standard Paragraph E at the end of this notice.

8. Market Responsive Energy, Inc.

[Docket No. ER95–1295–000]

Take notice that on August 18, 1995, Market Responsive Energy, Inc. tendered for filing amendments to its petition for waivers, blanket approvals, disclaimer of jurisdiction and order accepting rate schedule.

Comment date: September 6, 1995, in accordance with Standard Paragraph E at the end of this notice.

9. Idaho Power Company

[Docket No. ER95–1427–000]

Take notice that on August 9, 1995, Idaho Power Company tendered for filing an amendment in the above-referenced docket.

Comment date: September 7, 1995, in accordance with Standard Paragraph E at the end of this notice.

10. PECO Energy Company

[Docket No. ER95–1501–000]

Take notice that on August 7, 1995, PECO Energy Company (PECO) filed a Service Agreement dated July 26, 1995 with Duquesne Light Company (DLC) under PECO's FERC Electric Tariff Original Volume No. 1 (Tariff). The Service Agreement adds DLC as a customer under the Tariff.

PECO requests an effective date of July 26, 1995 for the Service Agreement.

PECO states that copies of this filing have been supplied to DLC and the Pennsylvania Public Utility Commission.

Comment date: September 6, 1995, in accordance with Standard Paragraph E at the end of this notice.

11. PECO Energy Company

[Docket No. ER95–1529–000]

Take notice that on August 11, 1995, PECO Energy Company (PECO) filed a Service Agreement dated July 21, 1995, with Boston Edison Company (BE) under PECO's FERC Electric Tariff Original Volume No 1 (Tariff). The Service Agreement adds BE as a customer under the Tariff.

PECO requests an effective date of July 21, 1995 for the Service Agreement.

PECO states that copies of this filing have been supplied to be and to the Pennsylvania Public Utility Commission.

Comment date: September 6, 1995, in accordance with Standard Paragraph E at the end of this notice.

12. Arizona Public Service Company

[Docket No. ER95–1533–000]

Take notice that on August 14, 1995, Arizona Public Service Company (APS), tendered for filing the Axis Station Letter Agreement Regarding Automatic Generation Controls (Agreement) between APS and Imperial Irrigation District (IID). The Agreement provides for the installation of Automatic Generation Controls (AGC) on Unit No. 1 at the Axis Generation Station and for IID's use of APS' allocation of capacity rights in Unit No. 1 when unused by APS.

As Operating Agent for the Axis Generating Station, APS shall install all required AGC controls and IID shall be responsible for the costs.

The parties request an October 15, 1995 effective date.

Copies of this filing have been served upon IID and the Arizona Corporation Commission.

Comment date: September 5, 1995, in accordance with Standard Paragraph E at the end of this notice.

13. Public Service Electric and Gas Company

[Docket No. ER95–1535–000]

Take notice that on August 14, 1995, Public Service Electric and Gas Company (PSE&G), tendered for filing an initial rate schedule to provide fully interruptible transmission service to Electric Clearinghouse, Inc., for delivery of non-firm wholesale electrical power and associated energy output utilizing the PSE&G bulk power transmission system.

Comment date: September 6, 1995, in accordance with Standard Paragraph E at the end of this notice.

14. Portland General Electric Company

[Docket No. ER95–1537–000]

Take notice that on August 14, 1995, Portland General Electric Company (PGE), filed pursuant to section 205 of the Federal Power Act, an Overbuild Operation and Maintenance Agreement with the Eugene Water and Electric Board.

Comment date: September 6, 1995, in accordance with Standard Paragraph E at the end of this notice.

15. Portland General Electric Company

[Docket No. ER95–1538–000]

Take notice that on August 14, 1995, Portland General Electric Company (PGE) filed, pursuant to section 205 of the Federal Power Act a Joint Operating Agreement with the Eugene Water and Electric Board.

Comment date: September 6, 1995, in accordance with Standard Paragraph E at the end of this notice.

16. Commonwealth Edison Company

[Docket No. ER95–1539–000]

Take notice that on August 14, 1995, Commonwealth Edison Company (ComEd) submitted for filing revisions to its Power Sales Tariff (PS–1 Tariff). ComEd proposes to add new service schedules to its Tariff in order to make available to other electric utilities Spinning Reserve Service and Non-Spinning Reserve Service to assist them in meeting control area responsibilities and to make available power and associated energy that other electric utilities may need to back up power supplies or to cover losses in connection with transmission service transactions under transmission service tariffs that ComEd filed with the Commission on the same date in Docket Nos. ER95–371–000 *et al.* (ComEd's NOPR Tariffs).

ComEd requests that the changes to its PS–1 Tariff be made effective as of the same date that the Commission allows ComEd's NOPR Tariffs to become effective and, accordingly, has asked the Commission to waive the Commission's notice requirements. Copies of this filing were served on current customers under the PS–1 Tariff, all parties to Docket Nos. ER95–371–000 *et al.* and the Illinois Commerce Commission.

Comment date: September 6, 1995, in accordance with Standard Paragraph E at the end of this notice.

17. Southwestern Electric Power Company

[Docket No. ER95–1540–000]

Take notice that on August 14, 1995, Southwestern Electric Power Company (SWEPCO) submitted service agreements establishing Austin (Texas) Electric Department and Louisville Gas & Electric Company as new customers under SWEPCO's umbrella Coordination Sales Tariff CST–1 (CST–1 Tariff).

SWEPCO requests an effective date of August 1, 1995 for the service agreements. Accordingly, SWEPCO seeks waiver of the Commission's notice requirements. Copies of this filing were served upon the two customers and the Public Utility Commission of Texas.

Comment date: September 6, 1995, in accordance with Standard Paragraph E at the end of this notice.

18. Central Power and Light Company

[Docket No. ER95–1541–000]

Take notice that on August 14, 1995, Central Power and Light Company (CPL) submitted service agreements establishing Austin (Texas) Electric Department, City Public Service Board of San Antonio, Texas, and Public Utilities Board (City of Brownsville) as new customers under CPL's umbrella Coordination Sales Tariff CST–1 (CST–1 Tariff).

CPL requests an effective date of August 1, 1995. Accordingly, CPL seeks waiver of the Commission's notice requirements. Copies of this filing were served upon the three customers and the Public Utility Commission of Texas.

Comment date: September 6, 1995, in accordance with Standard Paragraph E at the end of this notice.

19. MidAmerican Energy Company

[Docket No. ER95–1542–000]

Take notice that on August 11, 1995, MidAmerican Energy Company tendered for filing an amendment to its previous tariff filing in Docket No. ER95–188–000.

Comment date: September 6, 1995, in accordance with Standard Paragraph E at the end of this notice.

20. Illinois Power Company

[Docket No. ER95–1543–000]

Take notice that on August 10, 1995, Illinois Power Company (IP) tendered for filing two transmission tariffs: a net work integration service tariff; and a point-to-point transmission service tariff (including firm and non-firm components). The proposed tariffs are based on the pro-forma tariffs as outlined by the FERC in RM95–8–000 and is being filed pursuant to the Commission's order on rehearing in American Electric Power Service Corp., 71 FERC ¶ 61,393 (1995). The Company proposes that these tariffs become effective as of May 20, 1995.

Copies of this filing have been served on the parties which have previously become part of this proceeding.

Comment date: September 7, 1995, in accordance with Standard Paragraph E at the end of this notice.

21. Consolidated Edison Company of New York, Inc.

[Docket No. ER95–1544–000]

Take notice that on August 15, 1995, Consolidated Edison Company of New York, Inc. (Con Edison) tendered for filing an agreement to provide interruptible transmission service for Englehard Power Marketing, Inc. (EPM).

Con Edison states that a copy of this filing has been served by mail upon EPM.

Comment date: September 7, 1995, in accordance with Standard Paragraph E at the end of this notice.

22. Commonwealth Edison Company

[Docket No. ER95–1545–000]

Take notice that on August 14, 1995, Commonwealth Edison Company tendered for filing a Flexible Transmission Service Tariff FTS–1 and a Network Transmission Service Tariff NTS–1. These tariffs are being filed pursuant to the Commission's Further Guidance Order issued in *American Electric Power Corp.*, Docket Nos. ER93–540–003, *et al.*, issued on June 28, 1995. The tariffs are modeled on, and intended to be consistent with, the Commission's *pro forma* tariffs appended to its Notice of Proposed Rulemaking in Docket No. RM95–8–000.

Copies of the filing have been served on all parties of record in Docket Nos. ER95–371–000 and ER93–777–000.

Comment date: September 7, 1995, in accordance with Standard Paragraph E at the end of this notice.

23. American Electric Power Service Corporation

Docket No. ER95–1547–000]

Take notice that on August 14, 1995, American Electric Power Service Corporation, on behalf of Appalachian Power Company, Columbus Southern Power Company, Indiana Michigan Power Company, Kentucky Power Company, Kingsport Power Company, Ohio Power Company and Wheeling Power Company (collectively, ''the AEP Companies'') tendered for filing with the Commission a proposed Point-To-Point Transmission Service Tariff and a proposed Network Integration Service Tariff. The proposed tariffs were filed pursuant to the Commission's Order on Rehearing and Clarification and Providing Further Guidance on Processing Open Access Filings, 71 FERC ¶ 61,393, issued in this docket and others on June 28, 1995.

The proposed rates for transmission service were computed in accordance with the generic methodology for determining embedded cost charges for State One rates, as set forth in the Commission's Notice of Proposed Rulemaking in Docket No. RM95–8–000. The basic monthly rate proposed for point-to-point service is $2.09 per kilowatt-month. The basic monthly rate for network service is based on a load ratio share of the annual revenue requirement based on the cost-of-service underlying the pont-to-point rate.

Copies of the filing were served upon all participants in this docket (restricted service list) and the public service commissions of states of Ohio, Indiana, Kentucky, Michigan, Tennessee, West Virginia and Virginia.

Comment date: September 6, 1995, in accordance with Standard Paragraph E at the end of this notice.

24. Pennsylvania Electric Company

[Docket No. ER95–1548–000]

Take notice that on August 15, 1995, GPU Service Corporation (GPU), on behalf of Pennsylvania Electric Company, filed the First Amendment to the Hourly Energy Transmission Service Agreement between GPU and New York State Electric & Gas Company (Amendment). The Amendment deletes the Contract Amount cap, which prohibited NYSE&G from scheduling more than 200 megawatthours per hour of electric energy for transmission under the Hourly Energy Transmission Service Agreement, as originally filed. GPU requests a waiver of the Commission's notice requirements for good cause shown and an effective date of August 1, 1995 for the Amendment.

GPU has served copies of the filing on the Pennsylvania Public Utility Commission and New York State Electric & Gas Company.

Comment date: September 6, 1995, in accordance with Standard Paragraph E at the end of this notice.

25. Southern Company Services, Inc.

[Docket No. ER95–1549–000]

Take notice that on August 15, 1995, Southern Company Services, Inc. (SCS), acting on behalf of Alabama Power

Company, Georgia Power Company, Gulf Power Company, Mississippi Power Company, and Savannah Electric and Power Company (collectively referred to as Southern Companies) filed a Service Agreement dated as of July 18, 1995 between Alabama Electric Cooperative, Inc. and Southern Companies for service under the Short-Term Non-Firm Transmission Service Tariff of Southern Companies.

Comment date: September 6, 1995, in accordance with Standard Paragraph E at the end of this notice.

26. Boston Edison Company

[Docket No. ER95–1550–000]

Take notice that on August 15, 1995, Boston Edison Company (Edison) and New England Power Company (NEP) tendered for filing an Agreement for Improvements at Boston Edison's Medway Substation as a result of NEP's interconnection of a generating facility owned by Milford Power Limited Partnership (Enron) to NEP's transmission system. The Agreement supersedes a letter agreement previously approved by the Commission in Docket No. ER93–509–000.

Edison and NEP requests that the Agreement be made effective as of October 15, 1995.

A copy of this filing has been served upon the Massachusetts Department of Public Utilities.

Comment date: September 6, 1995, in accordance with Standard Paragraph E at the end of this notice.

27. Montana Power Company

[Docket No. ER95–1551–000]

Take notice that on August 15, 1995, the Montana Power Company (Montana) tendered for filing with the Federal Energy Regulatory Commission a Notice of Termination for Montana Rate Schedule FERC No. 172, a Transmission Service Agreement, dated June 1, 1988, between Montana and The Washington Water Power Company (WWP).

A copy of the filing was served upon WWP.

Comment date: September 6, 1995, in accordance with Standard Paragraph E at the end of this notice.

28. PacifiCorp

[Docket No. ER95–1552–000]

Take notice that on August 15, 1995, PacifiCorp tendered for filing a Long-Term Power Sales Agreement dated July 27, 1995 (Agreement) between PacifiCorp and Eugene Water & Electric Board (EWEB).

PacifiCorp requests that a waiver of prior notice be granted and that an effective date of one (1) day after the date the Commission receives this filing be assigned to the Agreement.

Copies of this filing were supplied to EWEB, the Public Utility Commission of Oregon and the Washington Utilities and Transportation Commission.

Comment date: September 6, 1995, in accordance with Standard Paragraph E at the end of this notice.

29. Tampa Electric Company

[Docket No. ER95–1553–000]

Take notice that on August 15, 1995, Tampa Electric Company (Tampa Electric) tendered for filing an agreement to provide non-firm transmission service for the City of Lakeland, Florida (Lakeland).

Tampa Electric proposed that the agreement be made effective on the earlier of the date it is accepted for filing or October 17, 1995, and therefore requests waiver of the Commission's notice requirement.

Copies of the filing have been served on Lakeland and the Florida Public Service Commission.

Comment date: September 6, 1995, in accordance with Standard Paragraph E at the end of this notice.

30. Public Service Company of Oklahoma

[Docket No. ER95–1554–000]

Take notice that on August 15, 1995, Public Service Company of Oklahoma (PSO) tendered for filing Amendment 1 to the Contract for Electric Service, dated April 20, 1995, between PSO and Northeast Oklahoma Electric Cooperative, Inc. (NEO). Amendment 1 provides for an additional point of delivery.

PSO seeks an effective date of August 25, 1995, and, accordingly, seeks waiver of the Commission's notice requirements. Copies of the filing were served on NEO and the Oklahoma Corporation Commission. Copies are also available for public inspection at PSO's offices in Tulsa, Oklahoma.

Comment date: September 6, 1995, in accordance with Standard Paragraph E at the end of this notice.

31. Bangor Hydro-Electric Company

[Docket No. ER95–1556–000]

Take notice that on August 16, 1995, Bangor Hydro-Electric Company (Bangor), tendered for initial filing a rate schedule for the provision of transmission service to Babcock Ultrapower Jonesboro and Babcock Ultrapower West Enfield, two qualifying facilities located in Bangor's service area.

Comment date: September 7, 1995, in accordance with Standard Paragraph E at the end of this notice.

32. Northeast Utilities Service Company

[Docket No. ER95–1557–000]

Take notice that on August 16, 1995, Northeast Utilities Service Company (NUSCO), tendered for filing, a Service Agreement with Central Maine Power Company (CMP) under the NU System Companies' System Power Sales/Exchange Tariff No. 5.

NUSCO states that a copy of this filing has been mailed to CMP.

NUSCO requests that the Service Agreement become effective within 60 days.

Comment date: September 7, 1995, in accordance with Standard Paragraph E at the end of this notice.

33. Houston Lighting & Power Company

[Docket No. ER95–1558–000]

Take notice that on August 16, 1995, Houston Lighting & Power Company (HL&P) tendered for filing an executed transmission service agreement (TSA) with LG&E Power Marketing, Inc. (LG&E) for service under HL&P's FERC Electric Tariff, Original Volume No. 1, for Transmission Service To, From and Over Certain HVDC Interconnections. The TSA provides for the transmission of economy energy to be scheduled to and over the East HVDC Interconnection. HL&P has requested an effective date of August 11, 1995.

Copies of the filing were served on LG&E and the Public Utility Commission of Texas.

Comment date: September 7, 1995, in accordance with Standard Paragraph E at the end of this notice.

34. Montaup Electric Company

[Docket No. ER95–1561–000]

Take notice that on August 16, 1995, Montaup Electric Company filed Notices of Cancellation of service agreements filed January 17, 1995 to extend the term of all requirements tariff service to its affiliates Blackstone Valley Electric Company, Eastern Edison Company and Newport Electric Corporation. The filing is required to comply with Montaup's commitment to the Attorney General of Massachusetts in the attached letter to withdraw the term extension following the Commission's approval of the settlement with the Company's nonaffiliated customers in Docket No. ER95–448–000, which has now been approved. Montaup requests the Commission to allow the Notices of Cancellation to become effective on March 19, 1995, which was the date the service agreements to be cancelled were allowed to become effective pursuant to the Commission's order of February 21, 1995 in Docket No. ER95–448–000

accepting those service agreements for filing.

Comment date: September 7, 1995, in accordance with Standard Paragraph E at the end of this notice.

35. Northern States Power Company (Minnesota) and Northern States Power Company (Wisconsin))

[Docket No. ER95–1562–000]

Take notice that on August 16, 1995, Northern States Power Company-Minnesota (NSP–M) and Northern States Power Company-Wisconsin (NSP–W) jointly tendered and request the Commission to accept two Transmission Service Agreements which provide for Limited and Interruptible Transmission Service to Kimball Power Company.

NSP requests that the Commission accept for filing the Transmission Service Agreements effective as of September 15, 1995. NSP requests a waiver of the Commission's notice requirements pursuant to Part 35 so the Agreements may be accepted for filing effective on the date requested.

Comment date: September 7, 1995, in accordance with Standard Paragraph E at the end of this notice.

36. Consolidated Edison Company of New York, Inc.

[Docket No. ER95–1564–000]

Take notice that on August 17, 1995, Consolidated Edison Company of New York, Inc. (Con Edison) tendered for filing a Supplement to its Rate Schedule FERC 117, an agreement to provide transmission and interconnection service to Long Island Lighting Company (LILCO). The Supplement provides for a decrease in the annual fixed rate carrying charges of $1908.21. Con Edison has requested that this increase take effect as of August 1, 1995.

Comment date: September 6, 1995, in accordance with Standard Paragraph E at the end of this notice.

37. Texas-New Mexico Power Company and Texas Generating Company II

[Docket No. ES95–37–000]

Take notice that on August 11, 1995, Texas-New Mexico Power Company (TNP) and Texas Generating Company II (TGC II) filed an application under § 204 of the Federal Power Act seeking authorization to enter into a revolving credit facility (Credit Facility).

TNP and TGC II propose to enter into a Credit Facility in the amount of $150 million with a syndicate of commercial banks led by Chemical Bank. TGC II will be the principal obligor under the Credit Facility with TNP guaranteeing TGC II's obligations. TNP proposes to issue up to $80 million of first mortgage bonds (New Bonds) as collateral security for borrowings under the Credit Facility. The final maturities of the Credit Facility and the New Bonds will not be later than December 31, 2000.

Also, TNP and TGC II request that the issuance of the securities be exempted from the Commission's competitive bidding requirements.

Comment date: September 11, 1995, in accordance with Standard Paragraph E at the end of this notice.

38. MDU Resources Group, Inc.

[Docket No. ES95–38–000]

Take notice that on August 18, 1995, MDU Resources Group, Inc. (MDU) filed an application under § 204 of the Federal Power Act seeking authorization to issue additional shares of Common Stock, par value $3.33, in connection with a three-for-two Common Stock Split to be effected in the form of a fifty percent (50%) stock dividend.

MDU proposes that a three-for-two stock split be effected on October 13, 1995, to holders of record on September 27, 1995. MDU presently has 18,984,654 shares of Common Stock issued and outstanding.

Comment date: September 18, 1995, in accordance with Standard Paragraph E at the end of this notice.

Standard Paragraph

E. Any person desiring to be heard or to protest said filing should file a motion to intervene or protest with the Federal Energy Regulatory Commission, 825 North Capitol Street, NE., Washington, DC 20426, in accordance with Rules 211 and 214 of the Commission's Rules of Practice and Procedure (18 CFR 385.211 and 18 CFR 385.214). All such motions or protests should be filed on or before the comment date. Protests will be considered by the Commission in determining the appropriate action to be taken, but will not serve to make protestants parties to the proceeding. Any person wishing to become a party must file a motion to intervene. Copies of this filing are on file with the Commission and are available for public inspection.

Lois D. Cashell,

Secretary.

[FR Doc. 95–21366 Filed 8–28–95; 8:45 am]

BILLING CODE 6717–01–P

Project Nos. 11077–001, et al

Hydroelectric Applications [Alaska Power and Telephone Company, et al.]; Notice of Applications

Take notice that the following hydroelectric applications have been filed with the Commission and are available for public inspection:

1a. *Type of Application:* Major License.

b. *Project No.:* 11077–001.

c. *Date filed:* May 31, 1994.

d. *Applicant*: Alaska Power and Telephone Company.

e. *Name of Project*: Goat Lake.

f. *Location*: At the existing Goat Lake, near Skagway, Alaska. Sections 10, 11, 14, 15, and 16, Township 27 South, Range 60 West, CRM.

g. *Filed Pursuant to*: Federal Power Act, 16 USC §§ 791(a)–825(r).

h. *Applicant Contact*: Mr. Robert S. Grimm, President, Alaska Power & Telephone Co., P.O. Box 222, Port Townsend, WA 98368, (206) 385–1733.

i. *FERC Contact*: Héctor M. Pérez, (202) 219–2839.

j. *Deadline for comments, recommendations, terms and conditions, and prescriptions*: October 10, 1995.

k. *Status of Environmental Analysis*: This application is now ready for environmental analysis at this time—see attached paragraph D10.

l. *Brief Description of Project*: The proposed project would consist of: (1) Goat Lake, with a surface area of 204 acres and a storage capacity of 5,460 acre-feet at surface elevation of 2,915 feet; (2) a submerged wedge wire screen intake at elevation 2,875 feet; (3) a 600-foot-long and 30-inch-diameter steel or HDPE siphon with a vacuum pump assembly; (4) a 6,200-foot-long and 22-inch-diameter steel penstock; (5) a powerhouse containing a 4–MW unit; (6) a 24.9–kV and 3,400-feet-long transmission line; and (7) other appurtenances.

m. *This notice also consists of the following standard paragraph:* A4 and D10.

n. *Available Locations of Application:* A copy of the application, as amended and supplemented, is available for inspection and reproduction at the Commission's Public Reference and Files Maintenance Branch, located at 941 North Capitol Street, NE., Room 3104, Washington, DC 20426, or by calling (202) 208–1371. A copy is also available for inspection and reproduction at the address shown in item h above.

2a. *Type of Application*: Preliminary Permit.

b. *Project No.* 11541–000.
c. *Date filed*: May 22, 1995.
d. *Applicant*: Atlanta Power Company, Inc.
e. *Name of Project*: Atlanta Power Station Project.
f. *Location*: On the Middle Fork Boise River in Elmore County, Idaho, near the town of Atlanta within the Boise National Forest. T5N,R11E, sections 5, 4, 3, 2, and 11, Boise Meridian.
g. *Filed Pursuant to*: Federal Power Act, 16 USC §§ 791 (a)–825(r).
h. *Applicant Contact*: Lynn E. Stevenson, President, Atlanta Power Company, Inc., Box 100, Fairfield, ID, (208) 764–2310; Michael C. Creamer, Esq., Givens Pursley & Huntley, 277 N. 6th Street, Suite 200, P.O. Box 2720, Boise, ID 83701, (208) 342–6571.
i. *FERC Contact*: Ms. Deborah Frazier-Stutely (202) 219–2842.
j. *Competing Application*: Project No. 11542–000, Atlanta Dam Water Project.
k. *Comment Date*: October 23, 1995.
l. *Description of Project*: The proposed project would consist of the existing Atlanta Power Station facilities, located at the Forest Service Kirby Dam, consisting of: (1) A penstock; (2) a powerhouse located at the dam, containing a single generating unit rated at 150 kilowatts; and (3) related facilities.

No new roads will be needed for the purpose of conducting studies.

m. *Purpose of Project*: The applicant is seeking a permit to study the feasibility of continuing to provide electric service to the town of Atlanta and power will not be sold to another entity.
n. *This notice also consists of the following standard paragraphs:* A5, A7, A9, A10, B, C, and D2.

3a. *Type of Application*: Preliminary Permit.
b. *Project No.* 11542–000.
c. *Date filed*: May 22, 1995.
d. *Applicant*: Central Idaho Electric Company.
e. *Name of Project*: Atlanta Dam Water Power Project.
f. *Location*: On the Middle Fork Boise River in Elmore County, Idaho, near the town of Atlanta, within the Boise National Forest. T5N,R11E, sections 4, 5, 6, 7; T5N,R10E, sections 12, 13, 14, 22, 23, 27, 28, 33; T4N,10E, sections 4, 5, 8, 16, 17, 20, 21, 28, 29, 33, 34; T3N,R10E sections 3, 9, 10, 16, 21, 28, 33, Boise Meridian.
g. *Filed Pursuant to*: Federal Power Act, 16 USC §§ 791 (a)–825(r).
h. *Applicant Contact*: Gary Campbell, Central Idaho Electric Company, 776 E. Bridgewater Ct., Boise, ID 83706, (208) 336–3162.
i. *FERC Contact*: Ms. Deborah Frazier-Stutely (202) 219–2842.
j. *Competing Application*: Project No. 11541–000, Atlanta Power Station Project.
k. *Comment Date*: October 23, 1995.
l. *Description of Project*: The proposed project would be located at the Forest Service Kirby Dam and would consist of: (1) A 250-foot-long penstock; (2) a powerhouse located at the dam, containing three generating units with a combined installed capacity of 4,500 kilowatts; and (3) a 69.5–Kv, 25-mile-long transmission line tying into an Idaho Power Company line in Featherville.

No new roads will be needed for the purpose of conducting studies.

m. *Purpose of Project*: Project power will be sold to a local utility.
n. This notice also consists of the following standard paragraphs: A5, A7, A9, A10, B, C, and D2.

4a. *Type of Application*: Preliminary Permit.
b. *Project No.:* 11552–000.
c. *Date Filed:* July 10, 1995.
d. *Applicant*: Robert Hagopian.
e. *Name of Project: Saugerties.*
f. *Location*: On Esopus Creek NEAR Saugerties in Ulster County, New York.
g. *Filed Pursuant to*: Federal Power Act 17 U.S.C. §§ 791(a)–825(r).
h. *Contact Person*: Robert Hagopian, 121 Cedar Street, Kingston, NY 12401, (914) 331–5279.
i. *FERC Contact*: Ms. Julie Bernt, (202) 219–2814.
j. *Comment Date*: October 16, 1995.
k. *Description of Project*: The proposed project would consist of: (1) An existing 34-foot-high, concrete ogee spillway dam owned by Saugerties Dam Property, Inc.; (2) an impoundment with a surface area of 140 acres at 47 feet m.s.l., with 826 acre feet of storage; (3) an existing 60-foot-long, 12-foot-wide headrace; (4) an existing 50-foot-long, 60-inch-diameter penstock; and, (5) an existing powerhouse which will contain two generating units with a total rated capacity of 1,900 kW; and, (6) a new 200-foot-long transmission line. The applicant estimates the average annual energy production to be 3,800,000 kWh and the cost of the work to be performed under the preliminary permit to be $8,000.
l. *Purpose of Project*: The power produced would be sold to a local utility company.
m. This notice also consists of the following standard paragraphs: A5, A7, A9, A10, B, C and D2.

In addition to filing under the above standard paragraphs, commenters may submit a copy of their comments on a 3½-inch diskette formatted for MS–DOS based computers. In light of our ability to translate MS–DOS based materials, the text need only be submitted in the format and version that it was generated (i.e., MS Word, WordPerfect 5.1/5.2, ASCII, etc.). It is not necessary to reformat word processor generated text to ASCII. For Macintosh users, it would be helpful to save the documents in Macintosh word processor format and then write them to files on a diskette formatted for MS–DOS machines.

5a. *Type of Application*: Article 19 Compliance Filing.
b. *Project Nos*: 1889 and 2485.
c. *Date Filed*: August 4, 1995.
d. *Applicant*: Northeast Utilities System.
e. *Name of Projects*: Turners Falls & Northfield Mountain.
f. *Location*: Connecticut River between Vernon, VT and Turners Falls, MA, in Franklin, County, MA.
g. *Filed Pursuant to*: Federal Power Act, 16 U.S.C. § 791(a)–825(r).
h. *Applicant Contact*: Mr. Richard W. Thomas, Northeast Utilities System, P.O. Box 270, Hartford, CT 06141–0270, (213) 665–3719,
i. *FERC Contact*: Julian W. Flint, (202) 219–2667.
j. *Comment Date*: October 10, 1995.
k. *Description of Application*: Northfield Mountain and Turners Falls Hydroelectric Projects are located on the mainstream of the Connecticut River. Operation of both projects results in fluctuation in the Turners Falls reservoir that exacerbates erosion along the shoreline. This new riverbank protection plan is designed to minimize bank erosion cause by operation of the projects.
l. This notice also consists of the following standard paragraphs: B, C1, and D2.

6a. *Type of Application*: Preliminary Permit.
b. *Project No.:* 11548–000.
c. *Date filed*: June 30, 1995.
d. *Applicant*: Silver Lake Hydro Inc.
e. *Name of Project*: Silver Lake.
f. *Location*: On the Duck River, near the City of Valdez, in the Third Judicial District, Alaska.
g. *Filed Pursuant to*: Federal Power Act 16 USC §§ 791(a)–825(r).
h. *Applicant Contact*: Mr. Thom A. Fischer, 1050 Larrabee Avenue, Bellingham, WA 98225, (360) 733–3008.
i. *FERC Contact*: Michael Spencer at (202) 219–2846.
j. *Comment Date*: October 27, 1995.
k. *Description of Project*: The proposed project would consist of: (1) A 100-foot-high dam at the mouth of Silver Lake; (2) a new reservoir will

replace Silver Lake and have a surface area of 1,670 acres, and 120,000 acre-feet of storage area; (3) a 6,000-foot-long, 8-foot-diameter penstock; (4) a powerhouse containing three generating units with a combined capacity of 5.0 MW and an average annual generation of 56 Gwh; and (5) a 18-mile-long transmission line.

No new access road will be needed to conduct the studies. The applicant estimates that the cost of the studies to be conducted under the preliminary permit would be $250,000.

l. Purpose of Project: Project power would be sold.

m. This notice also consists of the following standard paragraphs: A5, A7, A9, A10, B, C, and D2.

7a. *Type of Application:* Amendment of License.

b. *Project No.:* 1494–103.

c. *Date Filed:* July 7, 1995.

d. *Applicant:* Grand River Dam Authority.

e. *Name of Project:* Pensacola Project.

f. *Location:* Grand Lake O' The Cherokees, Delaware County, Afton, Oklahoma.

g. *Filed Pursuant to:* Federal Power Act, 16 U.S.C. § 791(a)–825(r).

h. *Applicant Contact:* Mr. Bob Sullivan, Grand River Dam Authority, P.O. Box 409, Drawer G, Vinita, OK 74301, (918) 256–5545.

i. *FERC Contact:* Joseph C. Adamson, (202) 219–1040.

j. *Comment Date:* October 11, 1995.

k. *Description of Amendment:* Grand River Dam Authority requests approval of a dredging management plan. The plan is the permitting procedure to be used in accomplishing a significant portion of non-project related dredging activities on the Pensacola Project. The activities covered under the plan are for dredging or excavation of up to 2,000 cubic yards of material from Grand Lake O' The Cherokees. The plan does not cover any dredging activities greater than the amount specified, or dredging activities that involve the removal or filling of wetlands. Those dredging activities not covered under the plan would require specific approval by the Commission.

l. This notice also consists of the following standard paragraphs: B, C1, and D2.

8a. *Type of Application:* Change of Land Rights and Removal of Land From the Project Boundary.

b. *Project No.:* 2000–008.

c. *Date filed:* May 25, 1995.

d. *Applicant:* New York Power Authority.

e. *Name of Project:* St. Lawrence-Franklin Delano Roosevelt Project.

f. *Location:* Whitehouse Bay, Hanlon and River Roads, Leishman Point, in the Town of Waddington, NY.

g. *Filed pursuant to:* Federal Power Act, 16 U.S.C. § 791(a)–825(r).

h. *Applicant contact:* Mr. Beverly Ravitch, Principal Attorney, New York Power Authority, 1633 Broadway, New York, NY 10019, (212) 468–6134.

i. *FERC contact:* John K. Hannula, (202) 219–0116.

j. *Comment date:* October 5, 1995.

k. *Descripton of Application:* Licensee proposes to remove from the project boundary 545 acres on Whitehouse Bay, 100 acres (3 parcels) on Hanlon and River Roads and 23 acres at Leishman Point, all in the Town of Waddington, NY. The properties will be returned to the local communities' tax base.

l. This notice also consists of the following standard paragraphs: B, C1 and D2.

Standard Paragraphs

A4. Development Application—Public notice of the filing of the initial development application, which has already been given, established the due date for filing competing applications or notices of intent. Under the Commission's regulations, any competing development application must be filed in response to and in compliance with public notice of the initial development application. No competing applications or notices of intent may be filed in response to this notice.

A5. Preliminary Permit—Anyone desiring to file a competing application for preliminary permit for a proposed project must submit the competing application itself, or a notice of intent to file such an application, to the Commission on or before the specified comment date for the particular application (see 18 CFR 4.36). Submission of a timely notice of intent allows an interested person to file the competing preliminary permit application no later than 30 days after the specified comment date for the particular application. A competing preliminary permit application must conform with 18 CFR 4.30(b) and 4.36.

A7. Preliminary Permit—Any qualified development applicant desiring to file a competing development application must submit to the Commission, on or before a specified comment date for the particular application, either a competing development application or a notice of intent to file such an application. Submission of a timely notice of intent to file a development application allows an interested person to file the competing application no later than 120 days after the specified comment date for the particular application. A competing license application must conform with 18 CFR 4.30(b) and 4.36.

A9. Notice of intent—A notice of intent must specify the exact name, business address, and telephone number of the prospective applicant, and must include an unequivocal statement of intent to submit, if such an application may be filed, either a preliminary permit application or a development application (specify which type of application). A notice of intent must be served on the applicant(s) named in this public notice.

A10. Proposed Scope of Studies under Permit—A preliminary permit, if issued, does not authorize construction. The term of the proposed preliminary permit would be 36 months. The work proposed under the preliminary permit would include economic analysis, preparation of preliminary engineering plans, and a study of environmental impacts. Based on the results of these studies, the Applicant would decide whether to proceed with the preparation of a development application to construct and operate the project.

B. Comments, Protests, or Motions to Intervene—Anyone may submit comments, a protest, or a motion to intervene in accordance with the requirements of Rules of Practice and Procedure, 18 CFR 385.210, .211, .214. In determining the appropriate action to take, the Commission will consider all protests or other comments filed, but only those who file a motion to intervene in accordance with the Commission's Rules may become a party to the proceeding. Any comments, protests, or motions to intervene must be received on or before the specified comment date for the particular application.

C. Filing and Service of Responsive Documents—Any filings must bear in all capital letters the title ''COMMENTS'', ''NOTICE OF INTENT TO FILE COMPETING APPLICATION'', ''COMPETING APPLICATION'', ''PROTEST'', ''MOTION TO INTERVENE'', as applicable, and the Project Number of the particular application to which the filing refers. Any of the above-named documents must be filed by providing the original and the number of copies provided by the Commission's regulations to: The Secretary, Federal Energy Regulatory Commission, 825 North Capitol Street, NE., Washington, DC 20426. An additional copy must be sent to Director, Division of Project Review, Federal Energy Regulatory Commission, Room 1027, at the above-mentioned

address. A copy of any notice of intent, competing application or motion to intervene must also be served upon each representative of the Applicant specified in the particular application.

C1. Filing and Service of Responsive Documents—Any filings must bear in all capital letters the title ''COMMENTS'', ''RECOMMENDATIONS FOR TERMS AND CONDITIONS'', ''PROTEST'', or ''MOTION TO INTERVENE'', as applicable, and the Project Number of the particular application to which the filing refers. Any of the above-named documents must be filed by providing the original and the number of copies provided by the Commission's regulations to: The Secretary, Federal Energy Regulatory Commission, 825 North Capitol Street, NE., Washington, DC 20426. A copy of any motion to intervene must also be served upon each representative of the Applicant specified in the particular application.

D2. Agency Comments—Federal, state, and local agencies are invited to file comments on the described application. A copy of the application may be obtained by agencies directly from the Applicant. If an agency does not file comments within the time specified for filing comments, it will be presumed to have no comments. One copy of an agency's comments must also be sent to the Applicant's representatives.

D10. Filing and Service of Responsive Documents—The application is ready for environmental analysis at this time, and the Commission is requesting comments, reply comments, recommendations, terms and conditions, and prescriptions.

The Commission directs, pursuant to section 4.34(b) of the regulations (see Order No. 533 issued May 8, 1991, 56 FR 23108, May 20, 1991) that all comments, recommendations, terms and conditions and prescriptions concerning the application be filed with the Commission within 60 days from the issuance date of this notice (October 10, 1995 for Project No. 11077–001). All reply comments must be filed with the Commission within 105 days from the date of this notice (November 22, 1995 for Project No. 11077–001).

Anyone may obtain an extension of time for these deadlines from the Commission only upon a showing of good cause or extraordinary circumstances in accordance with 18 CFR 385.2008.

All filings must (1) Bear in all capital letters the title ''COMMENTS'', ''REPLY COMMENTS'', ''RECOMMENDATIONS,'' ''TERMS AND CONDITIONS,'' or ''PRESCRIPTIONS;'' (2) set forth in the heading the name of the applicant and the project number of the application to which the filing responds; (3) furnish the name, address, and telephone number of the person submitting the filing; and (4) otherwise comply with the requirements of 18 CFR 385.2001 through 385.2005. All comments, recommendations, terms and conditions or prescriptions must set forth their evidentiary basis and otherwise comply with the requirements of 18 CFR 4.34(b). Agencies may obtain copies of the application directly from the applicant. Any of these documents must be filed by providing the original and the number of copies required by the Commission's regulations to: The Secretary, Federal Energy Regulatory Commission, 825 North Capitol Street, NE., Washington, DC 20426. An additional copy must be sent to Director, Division of Project Review, Office of Hydropower Licensing, Federal Energy Regulatory Commission, Room 1027, at the above address. Each filing must be accompanied by proof of service on all persons listed on the service list prepared by the Commission in this proceeding, in accordance with 18 CFR 4.34(b), and 385.2010.

Dated: August 23, 1995.

Lois D. Cashell,

Secretary.

[FR Doc. 95–21365 Filed 8–28–95; 8:45 am]

BILLING CODE 6717–01–P

ENVIRONMENTAL PROTECTION AGENCY

[FRL–5287–3]

Agency Information Collection Activities Up for Renewal

AGENCY: Environmental Protection Agency (EPA).

ACTION: Notice.

SUMMARY: In compliance with the Paperwork Reduction Act (44 U.S.C. 3501 *et seq.*), this notice announces that the Information Collection Request (ICR) listed below is coming up for renewal. Before submitting the renewal package to the Office of Management and Budget (OMB), EPA is soliciting comments on specific aspects of the collection as described below.

DATES: Comments must be submitted on or before October 30, 1995.

ADDRESSES: MVAC Recycling Coordinator, 401 M Street, SW., (6205J), Washington, DC 20460. Materials relevant to this proposed rulemaking are contained in Public Docket No. A–95–34, Category VIII–D. This docket is located in Room M–1500, Waterside Mall (Ground Floor), U.S. Environmental Protection Agency, 401 M Street, SW., Washington, DC 20460. Dockets may be inspected from 8:30 a.m. to 5:30 p.m., Monday through Friday. A reasonable fee may be charged for copying docket materials.

FOR FURTHER INFORMATION CONTACT: Christine Dibble, (202) 233–9147. Facsimile number: (202) 233–9577. Electronic address: dibble.christine@epamail.epa.gov. Note that questions but not comments will be accepted electronically.

SUPPLEMENTARY INFORMATION:

Affected Entities

Entities affected by this action are new and used motor vehicle dealers, gasoline service stations, truck rental and leasing facilities without drivers, passenger car rental facilities, top, body, upholstery repair and paint shops, general automotive repair shops, and automotive repair shops not elsewhere classified. Clean Air Act Section 609 automotive air-conditioning technician certification programs, and approved independent standards testing organizations, will also be affected.

Title

''Servicing of Motor Vehicle Air Conditioners.'' OMB Control Number: 2060–0247. EPA Control Number: 1617.06. Expiration Date: January 31, 1996.

Abstract

In 1992, EPA developed regulations under Section 609 of the Clean Air Act Amendments of 1990 (Act) for the recycling of CFCs in motor vehicle air conditioners. These regulations were published in 57 FR 31240, and are codified at 40 CFR Subpart B (§ 82.30 *et seq.*). The reasons the information is being collected, the way the information is to be used, and whether the requirements are mandatory, voluntary, or required to obtain a benefit, are described below. The ICR renewal would not include any burden for third-party or public disclosures not previously reviewed and approved by OMB.

Technician Training and Certification

According to Section 609(b)(4) of the Act, automotive technicians are required to be certified in the proper use of recycling equipment for servicing motor vehicle air conditioners. Certification programs must meet EPA standards. The Stratospheric Protection Division requires that certification

programs send their training and testing materials to EPA for approval. The information requested is used by the Stratospheric Protection Division to guarantee a degree of uniformity in the testing programs for motor vehicle service technicians.

Approved Independent Standards Testing Organizations

In addition, Section 609(b)(2)(A) of the Act requires independent laboratory testing of recycling equipment to be certified by EPA. The Stratospheric Protection Division requires independent laboratories to submit an application that proves their general capacity to certify equipment to meet the Society of Automotive Engineers (SAE) J standards for recycled refrigerant. The information requested is used by the Stratospheric Protection Division to approve independent laboratories that can assure an industry accepted standard of quality in recycling and recovery equipment.

Substantially Identical Equipment

Section 609(b)(2)(B) of the Act allows equipment that was purchased before the proposal of the regulations to be approved by EPA if it is substantially identical to equipment that has been certified by an EPA approved independent laboratory. This measure is designed to incorporate or ''grandfather'' older equipment that has not been submitted to an independent laboratory for testing. The equipment manufacturer or owners may submit the following to the Stratospheric Protection Division: an application and supporting documents that includes process flow sheets, a list of equipment components and any other information which would indicate that the equipment is capable of recovering and/or cleaning the refrigerant to standards set forth in the appropriate appendix to the regulations. The information provided allows EPA to determine if the equipment is substantially identical to certified equipment.

Certification, Reporting and Recordkeeping

To facilitate enforcement under Section 609, EPA has developed several recordkeeping requirements. The information is used by the Stratospheric Protection Division to verify compliance with Section 609 of the Act. First, establishments that own recover-only equipment must maintain records of the name and address of the facility that is reclaiming their refrigerant. Second, any person who owns approved refrigerant recovery or recycling equipment must retain records demonstrating that all persons authorized to operate the equipment are currently certified technicians. Last, any person who sells or distributes refrigerant that is in a container of less than 20 pounds must verify that the purchaser is a certified technician, unless the purchase of small containers is for resale only. In that case, the seller must obtain a written statement from the purchaser that the containers are for resale only, and must indicate the purchaser's name and business address.

In addition, section 609(d)(3)–(4) of the Act requires that by January 1, 1992, all entities that service motor vehicle air conditioners for consideration must have acquired approved refrigerant recycling equipment. The establishment must have submitted to the Administrator on a one-time basis a certificate that provides the following information: the name of the equipment owner, the address of the service establishment where the equipment will be used, and the make, model, year, and serial number of the equipment. Note that this reporting requirement is contained in the statute itself and was not developed by EPA.

The EPA would like to solicit comments to:

(i) Evaluate whether the proposed collection of information is necessary for the proper performance of the functions of the Agency, including whether the information will have practical utility;

(ii) Evaluate the accuracy of the Agency's estimate of the burden of the proposed collection of information;

(iii) Enhance the quality, utility, and clarity of the information to be collected; and

(iv) Minimize the burden of the collection of information on those who are to respond, including through the use of appropriate automated collection techniques or other forms of information technology, *e.g.*, permitting electronic submission of responses.

Burden Statement

The annual burden is reported in this Notice first, by annual respondent burden, and second, by industry reporting burden. The burden hours shown represent the hours in both the existing information collection request and the ICR renewal, since the renewal of the request does not change any of the burden hours.

(i)(A) Equipment Certification

Collection activities	Burden hours (per year)
Annual respondent burden:	
1. Compiling information and submitting it to EPA Headquarters	.5
Total	.5

Annual burden hour total—(.5)×No. of respondents (190,000)=95,000 hrs.

(i)(B) Equipment Certification for Service Stations that will Change Ownership or New Firms Entering the Market

Collection activities	Burden hours (per year)
Annual respondent burden:	
1. Compiling information and submitting it to EPA Headquarters	.5
Total	.5

Annual burden hour total—(.5)×No. of respondents (4,000)=2,000 hrs.

(ii) Technician Certification Programs

Collection activities	Burden hours (per year)
Annual respondent burden:	
1. Compile information from training program and submit to EPA	1
2. Every two years submit a summary of program review to EPA	2
Total	3

Annual burden hour total—(3)×No. of certification programs (13)=39 hours.

(iii) Independent Laboratory Equipment Testing Programs

Collection activities	Burden hours (per year)
Annual respondent burden:	
1. Compile information on testing program and send to EPA	8
Total	8

Annual burden hour total—(8)×No. of respondents (2)=16 hours.

(iv) Substantially Identical Equipment Submission

Collection activities	Burden hours (per year)
Annual respondent burden:	
1. Compiling information and submitting it to EPA Headquarters	1
Total	1

Annual burden hour total—(1)×No. of respondents (12)=12 hrs.

(v) Small Container Purchased for Resale Only Recordkeeping

Collection activities	Burden hours (per year)
Annual respondent burden:	
1. Compiling information and maintaining files	.5
Total	.5

Annual burden hour total—(.5)×No. of respondents (2000) = 1000 hrs.

(vi) Recordkeeping for off site Reclamation or Recycling

Collection activities	Burden hours (per year)
Annual respondent burden:	
1. Recording the name and address	.08
Total	.08

Annual burden hour total—(.08)×No. of respondents (90,000)=7200 hrs.

The industry reporting burden for this collection is estimated in the following tables. It includes the time needed to comply with EPA's certification requires and Agency reviews.

Respondent activities	Service entity hrs.
Equipment certification burden per occurrence:	
Complete certification and submit it to EPA	.5

Respondent activities	Training program companies hrs.
Technician certification program:	
Submit to EPA a copy of the technician training program	1
2 year review of training program, with a summary being submit to EPA	2

Respondent activities	Independent laboratory hrs.
Independent lab testing:	
Compile information on testing program and submit to EPA	8

Response activities	Applicant hrs.
Substantially identical equipment:	
Compile information on equipment and submit to EPA	1

Response activities	Sellers of small containers hrs.
Small containers purchased for resale only recordkeeping requirements:	
Compile and file information	.5

Response activities	Service establishment hrs.
Recordkeeping for off site reclamation or recycling:	
Recording the name and address of the off site facility	.08

No person is required to respond to a collection of information unless it displays a currently valid OMB control number. The OMB control numbers for EPA's regulations are displayed in 40 CFR Part 9.

Send comments regarding these matters, or any other aspects of the information collection, including suggestions for reducing the burden, to the address listed above under **ADDRESSES** near the top of this Notice.

Dated: August 16, 1995.

Paul M. Stolpman,

Director, Office of Atmospheric Programs.

[FR Doc. 95–21411 Filed 8–28–95; 8:45 am]

BILLING CODE 6560–50–P

[FRL–5287–4]

Common Sense Initiative Council (CSIC)

AGENCY: Environmental Protection Agency (EPA).

ACTION: Notification of Public Advisory CSIC Iron and Steel Sector Subcommittee; Metals Finishing Sector Subcommittee; and Automobile Manufacturing Sector Subcommittee—Open Meetings.

SUMMARY: Pursuant to the Federal Advisory Committee Act, Public Law 92–463, notice is hereby given that the Iron and Steel Sector Subcommittee, the Metals Finishing Sector Subcommittee, the Automobile Manufacturing Sector Subcommittee and the Computers and Electronics Sector Subcommittee of the Common Sense Initiative Council (CSIC) will meet on the dates and times described below. All times noted are Eastern Time. All meetings are open to the public. Seating at meetings will be on a first-come basis. Limited time will be provided for members of the public wishing to make oral comments at the meetings. For further information concerning specific meetings, please contact the individuals listed with the Sector Subcommittee announcements below.

(1) Iron and Steel Sector Subcommittee—September 21, 1995

The Common Sense Initiative Council, Iron and Steel Sector Subcommittee will hold an open meeting on Thursday, September 21, 1995. The meeting will begin at 8 a.m. EST and run until 3 p.m. The meeting will be held at the Memphis Convention Center, 255 North Main Street, Memphis, TN 38103–1623, telephone number (901) 576–1200.

The purpose of the Subcommittee meeting will be to review project status, make any needed implementation decisions, and to discuss topics and issues relevant to the iron and steel industry. The Iron and Steel Subcommittee has created four workgroups which are responsible for proposing to the full Subcommittee for its review and approval potential activities or projects that the Iron and Steel Sector Subcommittee will undertake, and for carrying out projects once approved. Workgroups will be meeting on Wednesday preceding the meeting at the Holiday Inn Crowne Plaza, 250 North Main Street, Memphis, TN 38102, telephone number (901) 526–1561. Workgroups will continue working on implementation of approved projects.

For further meeting information about the Iron and Steel Sector Subcommittee or Workgroup meetings please call either Ms. Mary Byrne at (312) 353–2315 in Chicago, IL or Ms. Judith Hecht at (202) 260–5682 in Washington, DC.

(2) Metals Finishing Sector Subcommittee—September 21, 1995

The Common Sense Initiative Council, Metals Finishing Sector Subcommittee is convening an open meeting on Thursday, September 21, 1995. The meeting will begin at approximately 9 a.m. EST and run until 4 p.m. The meeting will be held at the

Hyatt Regency Hotel, 2799 Jefferson Davis Highway, Arlington, VA 22202, (703) 418–1234.

The purpose of the meeting will be to further discuss groundrules, receive updates on projects from all five workgroups, and make progress on projects under development but not endorsed. Examples of regulatory projects being discussed include: MP&M Phase 1 Rule, RCRA Pilot Project, Reporting Inventory Pilot, as well as other metals finishing research, enforcement and incentive projects.

For further Metals Finishing Sector Subcommittee meeting information contact Bob Benson, Designated Federal Officer (DFO) on (202) 260–8668, Washington, D.C. or Mark Mahoney, Alternate DFO on (617) 565–1155, Boston, MA.

(3) Automobile Manufacturing Sector Subcommittee—September 27, 1995

The Common Sense Initiative Council, Automobile Manufacturing Sector Subcommittee is convening an open meeting on Wednesday, September 27, 1995. The meeting will begin at approximately 9:30 a.m. EST and run until about 3:30 p.m. The meeting will be held at the Stouffer Concourse Hotel, 2399 Jefferson Davis Highway, Arlington, VA, 22202, (703) 418–6800.

The following action items will be covered at this meeting: the community technical assistance and alternative sector regulatory system groups will present their merged workplan to the Subcommittee; the community technical assistance group also will present a summary of the draft data they have collected; and each project team chair will present what deliverables their group can accomplish by the last meeting before the end of the calendar year (i.e., November 16, 1995).

Agendas will be available by September 20, 1995. In general, any person or persons wishing to make an oral presentation will be limited to a total of three minutes during the public comment period. For further meeting information contact Carol Kemker, DFO on (404) 347–3555 extension 4222, Atlanta, GA, or Keith Mason, Alternate DFO, on (202) 260–1360, Washington, DC.

FURTHER INFORMATION AND INSPECTION OF CSIC DOCUMENTS: Documents relating to the above Sector Subcommittee announcements will be publicly available at the meetings. Thereafter, these documents, together with official minutes for the meetings, will be available for public inspection in Room 2417M of EPA Headquarters, Common Sense Initiative Program Staff, 401 M Street, S.W., Washington, D.C. 20460, phone (202) 260–7417. CSIC information can be accessed electronically through contacting Katherine Brown at: brown.katherine@epamail.gov.

Dated: August 22, 1995.

Prudence Goforth,

Designated Federal Officer.

[FR Doc. 95–21409 Filed 8–28–95; 8:45 am]

BILLING CODE 6560–50–P

[FRL–5288–3]

Open Meeting on Alternative Approaches to Fund Water and Wastewater Projects on September 21, 1995

The Environmental Protection Agency's Office of Water will hold an open meeting to discuss alternative funding sources for water and wastewater projects on September 21, 1995. The meeting will be held at the Conference Center at EPA's Regional Office in Denver, 999 18th Street, Denver, Colorado. The meeting will begin at 8:30 a.m. and end at 5:00 p.m.

This meeting will allow stakeholders to share their views and to assist EPA in preparing a report on alternative sources of clean water project funding. Congress requested EPA to prepare this report as part of the Agency's FY 1995 Appropriations Bill. EPA is conducting this study with assistance from the Environmental Finance Center at Syracuse University.

Participants at the meeting will be encouraged to provide their views on a number of different alternatives for funding wastewater and drinking water projects, including delivery mechanisms for this funding, along with other relevant issues. Following a discussion among invited panel members, other participants will be given an opportunity to offer their comments.

All parties other than panel members who wish to speak at the meeting should contact Ronda Garlow in the Environmental Finance Center at Syracuse University at (315) 443–5612 in advance of the meeting. Ten minutes will be available for each speaker.

All other inquiries concerning the meeting should be directed to Mr. James Smith of the Conference of Infrastructure Financing Authorities (CIFA) at (202) 371–9770.

Dated: August 22, 1995.

John P. Lehman,

Acting Director, Office of Wastewater Management.

[FR Doc. 95–21414 Filed 8–29–95; 8:45 am]

BILLING CODE 6560–50–M

FEDERAL COMMUNICATIONS COMMISSION

Notice of Public Information Collections Being Reviewed by the Federal Communications Commission

August 23, 1995.

The Federal Communications, as part of its continuing effort to reduce paperwork burden invites the general public and other Federal agencies to take this opportunity to comment on the following proposed and/or continuing information collections, as required by the Paperwork Reduction Act of 1995, Public Law 104–13. Comments concerning the Commission's need for this information, the accuracy of the provided burden estimates, and any suggested methods for minimizing respondent burden, including the use of automated information techniques are requested.

Written comments should be submitted on or before October 30, 1995. If you anticipate that you will be submitting comments, but find it difficult to do so within the period of time allowed by this notice, you should advise the contact listed below as soon as possible.

Direct all comments to Dorothy Conway, Federal Communications, Room 234, 1919 M St., NW., Washington, DC 20554 or via internet to dconway@fcc.gov.

For additional information or copies of the information collections contact Dorothy Conway at 202–418–0217 or via internet at dconway@fcc.gov. Copies may also be obtained via fax by contacting the Commission's Fax on Demand System. To obtain fax copies call 202–418–0177 from the handset on your fax machine, and enter the document retrieval number indicated below for the collection you wish to request, when prompted.

OMB Approval Number: 3060–0433.

Title: Basic Signal Leakage Performance Report.

Form No.: FCC 320.

Type of Review: Extension of existing collection.

Respondents: Businesses or other for-profit; Small businesses or organizations.

Number of Respondents: 32,000.

Estimated Time Per Response: 20 hours.

Total Annual Burden: 640,000 hours.

Needs and Uses: Cable television system operators who use frequencies in the bands 108–137 and 225–400 MHz (aeronautical fequencies) are required to file a cumulative signal leakage index (CLI) derived under 47 CFR 76.611(a)(1) or the results of airspace measurements derived under 47 CFR 76.611(a)(2). This yearly filing is done in accordance with 47 CFR 76.615 on the FCC Form 320. The data is used by FCC staff to ensure the safe operation of aeronautical and marine radio services and to monitor compliance of cable aeronautical usage which will minimize future interfeence of these safety of life services.

Fax Document Retrieval Number: 600434.

OMB Approval No: New Collection.

Title: Section 63.16 Construction of Stand-Alone Cable System by a Carrier in its Exchange Telephone Service Area, CC Docket No. 87–266.

Form No.: N/A.

Type of Review: Extension of existing collection.

Respondents: Business and other for-profit.

Number of Respondents: 50.

Estimated Time Per Response: 1 hour per response.

Total Annual Burden: 50 hours.

Needs and Uses: The Commission finds that the public interest would be served by providing for reduced ''streamlined'' Section 214 authorization to local exchange telephone companies (LECs) against whom it is not enforcing the cable/telephone company cross-ownership ban, who propose to construct a cable system in their service area if the LEC is willing to certify to three facts. It must certify that (1) the cable system is a stand-alone system, (2) it will comply with Commission accounting, cost allocation, affilate transaction rules applicable to nonregulated activities, and (3) that is has secured a franchise to provide cable service pursuant to Title VI of the Communications Act. The Commission believes that if these conditions are met, more detailed individual scrutiny of Section 214 applications would not be in the public interest.

Fax Document Retrieval Number: 600001.

Federal Communications Commission.

William F. Caton,

Acting Secretary.

[FR Doc. 95–21351 Filed 8–28–95; 8:45 am]

BILLING CODE 6712–01–F

Notice of Public Information Collections Being Reviewed by FCC for Extension Under Delegated Authority; 5 CFR 1320 Authority

August 23, 1995.

The Federal Communications Commission, as part of its continuing effort to reduce paperwork burden invites the general public and other Federal agencies to take this opportunity to comment on the following proposed and/or continuing information collections, as required by the Paperwork Reduction Act of 1995, Public Law 104–13. Comments concerning the Commission's need for this information, the accuracy of the provided burden estimates, and any suggested methods for minimizing respondent burden, including the use of automated information techniques are requested. The FCC is reviewing the following information collection requirements for possible 3-year extension under delegated authority 5 CFR 1320, authority delegated to the Commission by the Office of Management and Budget (OMB).

Written comments should be submitted on or before October 30, 1995. If you anticipate that you will be submitting comments, but find it difficult to do so within the period of time allowed by this notice, you should advise the contact listed below as soon as possible.

Direct all comments to Dorothy Conway, Federal Communications, Room 234, 1919 M St., NW., Washington, DC 20554 or via internet to dconway@fcc.gov.

For additional information or copies of the information collections contact Dorothy Conway at 202–418–0217 or via internet at dconway@fcc.gov. Copies may also be obtained via fax by contacting the Commission's Fax on Demand System. To obtain fax copies call 202–418–0177 from the handset on your fax machine, and enter the document retrieval number indicated below for the collection you wish to request, when prompted.

OMB Approval Number: 3060–0204.

Title: 90.38(b) Physically handicapped ''Special Eligibility Showing''.

Form No.: N/A.

Type of Review: Extension of existing collection.

Resopondents: Individuals or households.

Number of Respondents: 20.

Estimated Time Per Response: .33 hours.

Total Annual Burden: 7 hours.

Needs and Uses: Section 90.38(b) requires that persons claiming eligibility in the Special Emergency Radio Service on the basis of physical handicapped present a physician's statement indicated that they are handicapped. This is to ensure that frequencies reserved for licensing to handicapped individuals are not licensed to non-handicapped persons.

Fax Document Retrieval Number: 600204.

OMB Approval No: 3060–0223.

Title: 90.129(b) Supplemental information to be routinely submitted with applications (non-type accepted equipment).

Form No.: N/A.

Type of Review: Extension of existing collection.

Respondents: businesses or other for-profit; not-for-profit institutions; state, local or tribal government.

Number of Respondents: 100.

Estimated Time Per Response: .33.

Total Annual Burden: 33 hours.

Needs and Uses: Section 90.129(b) requires applicants using non type-accepted equipment to provide a description of the equipment. This information is used to evaluate the interference protential of the proposed operation.

Fax Document Retrieval Number: 600223.

OMB Approval No: 3060–0516.

Title: Time Brokerage Ruling.

Form No.: N/A.

Type of Review: Exension of existing collection.

Respondents: Business or other for-profit.

Number of Respondents: 1.

Estimated Time Per Response: 40 hours.

Total Annual Burden: 40 hours.

Needs and Uses: This information collection requires parties that are unable to verify that a time brokerage agreement complies with the local ownership rules to file a request for ruling with the Commission. The data are used by FCC staff to make a determination that the arrangement will not lead to excessive concentration in the local radio market.

Fax Document Retrieval Number: 600516.

OMB Approval No.: 3060–0374.

Title: Section 73.1690 Modification of transmission system.

Form No.: N/A.

Type of Review: Extention of existing collection.

Respondents: Business and other-for-profit.

Number of Respondents: 300 AM; 341 FM/TV.

Estimated Time Per Response: 3 hours/respondents-AM; 0.05 hours/respondents-FM/TV.

Total Annual Burden: 1071.

Needs and Uses: Section 73.1690(e) requires AM, FM and TV station licensees to prepare an informational statement or diagram describing any electrical and mechanical modification to authorized transmitting equipment that can be made without prior Commission approval provided that equipment performance measurements are made to ensure compliance with FCC rules. This informal statement or diagram is to be retained at the transmitter site as long as the equipment is in use. The data are used by broadcast licensees to provide procespective users of the modified equipment with necessary information.

Fax Document Retrieval Number: 600374.

OMB Approval No: 3060–0374.

Title: Section 73.3538 Modification of transmission system.

Form No.: N/A.

Type of Review: Extention of existing collection.

Respondents: Business and other-for-profit.

Number of Respondents: 40 AM; 135 AM/FM.

Estimated Time Per Response: 8 hours per AM respondent; 2 hours per AM/FM respondent.

Total Annual Burden: 590 hours.

Needs and Uses: Section 73.3538(b) requires a broadcast station to file an informal application to make the following changes in a station authorization: (1) to specify new AM station directional antenna field monitoring point; and (2) to modify or discontinue the obstruction marking or lighting of an antenna supporting structure. The data are used by FCC staff to: (1) establish a monitoring point that will be used to guarantee the proper performance of a directional antenna in FCC monitoring activities and to ensure that no interference is caused to other stations; and (2) to ensure that the modification or discontinuance of the obstruction marking or lighting will not cause a menance to air navigation. The data is then extracted for inclusion in a modified license to operate the station.

Fax Document Retrieval Number: 600374.

OMB Approval No: 3060–0526.

Title: Density Pricing Zone Plans, Expanded Interconnection with Local Telephone Company Facilities—CC Docket 91–141.

Form No.: N/A.

Type of Review: Extention of existing collection.

Respondents: Business and other-for-profit.

Number of Respondents: 16.

Estimated Time Per Response: 200 hours.

Total Annual Burden: 3,200 hours.

Needs and Uses: In CC Docket No. 91–141, the commission required Tier 1 LECs to provide expanded opportunities for third-party interconnection iwth their interstate special access facilities. The LECs will be permitted to establish a number of rate zones within study areas in which expanded interconnection is operational. These LECs must file and obtain approval of their pricing plans which will be used by FCC staff to ensure that the tariff rates are just, reasonable and nondiscriminatory pursuant to the Act.

Fax Document Retrieval Number: 600526.

Federal Communications Commission.

William F. Caton,

Acting Secretary.

[FR Doc. 95–21353 Filed 8–28–95; 8:45 am]

BILLING CODE 6712–01–F

[Report No. 2094]

Petition for Reconsideration of Actions in Rulemaking Proceedings

August 24, 1995.

Petition for reconsideration have been filed in the Commission rulemaking proceedings listed in this Public Notice and published pursuant to 47 CFR Section 1.429(e). The full text of these documents are available for viewing and copying in Room 239, 1919 M Street, NW., Washington, DC, or may be purchased from the Commission's copy contractor ITS, Inc. (202) 857–3800. Opposition to this petition must be filed on or before September 13, 1995.

See Section 1.4(b)(1) of the Commission's rules (47 CFR 1.4(b)(1)). Replies to an opposition must be filed within 10 days after the time for filing oppositions has expired.

Subject: Amendment of Parts 21 and 74 of the Commission's Rules with Regards to Filing Procedures in the Multipoint Distribution Services and in the Instructional Television Fixed Service. (MM Docket No. 94–131). Implementation of section 309(j) of the Communications Act—Competitive Bidding. (PP Docket No. 93–253) Number of petitions: 14.

Subject: Amendment of Parts 21 and 74 of the Commission's Rules with Regards to Filing Procedures in the Multipoint Distribution Services and in the Instructional Television Fixed Service. (MM Docket No. 94–131). Implementation of section 309(j) of the Communications Act—Competitive Bidding. (PP Docket No. 93–253) Number of petitions: 22.

Federal Communications Commission.

William F. Caton,

Acting Secretary.

[FR Doc. 95–21352 Filed 8–28–95; 8:45 am]

BILLING CODE 6712–01–M

FEDERAL EMERGENCY MANAGEMENT AGENCY

[FEMA–3116–EM]

Amendment to Notice of an Emergency Declaration; Florida

AGENCY: Federal Emergency Management Agency (FEMA).

ACTION: Notice.

SUMMARY: This notice amends the notice of an emergency disaster for the State of Florida (FEMA–3116–EM), dated August 3, 1995, and related determinations.

EFFECTIVE DATE: August 21, 1995.

FOR FURTHER INFORMATION CONTACT: Pauline C. Campbell, Response and Recovery Directorate, Federal Emergency Management Agency, Washington, DC 20472, (202) 646–3606.

SUPPLEMENTARY INFORMATION: The notice of an emergency for the State of Florida dated August 3, 1995, is hereby amended to include the following area among those areas determined to have been adversely affected by the catastrophe declared an emergency by the President in his declaration of August 3, 1995:

Orange County for emergency assistance as defined in the declaration letter of August 3, 1995.

(Catalog of Federal Domestic Assistance No. 83.516, Disaster Assistance)

Richard W. Krimm,

Associate Director, Response and Recovery Directorate.

[FR Doc. 95–21393 Filed 8–28–95; 8:45 am]

BILLING CODE 6718–02–M

[FEMA–1064–DR]

Minnesota; Major Disaster and Related Determinations

AGENCY: Federal Emergency Management Agency (FEMA).

ACTION: Notice.

SUMMARY: This is a notice of the Presidential declaration of a major disaster for the State of Minnesota (FEMA–1064–DR), dated August 18, 1995, and related determinations.

EFFECTIVE DATE: August 18, 1995.

FOR FURTHER INFORMATION CONTACT: Pauline C. Campbell, Response and Recovery Directorate, Federal

Emergency Management Agency, Washington, DC 20472, (202) 646–3606.

SUPPLEMENTARY INFORMATION: Notice is hereby given that, in a letter dated August 18, 1995, the President declared a major disaster under the authority of the Robert T. Stafford Disaster Relief and Emergency Assistance Act (42 U.S.C. 5121 *et seq.*), as follows:

I have determined that the damage in certain areas of the State of Minnesota, resulting from severe storms, straight line winds and tornadoes on July 9, 1995 through and including July 14, 1995, is of sufficient severity and magnitude to warrant a major disaster declaration under the Robert T. Stafford Disaster Relief and Emergency Assistance Act (''the Stafford Act''). I, therefore, declare that such a major disaster exists in the State of Minnesota.

In order to provide Federal assistance, you are hereby authorized to allocate from funds available for these purposes, such amounts as you find necessary for Federal disaster assistance and administrative expenses.

You are authorized to provide Public Assistance in the designated areas. Individual Assistance and/or Hazard Mitigation may be added at a later date, if requested and warranted. Consistent with the requirement that Federal assistance be supplemental, any Federal funds provided under the Stafford Act for Public Assistance or Hazard Mitigation will be limited to 75 percent of the total eligible costs.

The time period prescribed for the implementation of section 310(a), Priority to Certain Applications for Public Facility and Public Housing Assistance, 42 U.S.C. 5153, shall be for a period not to exceed six months after the date of this declaration.

Notice is hereby given that pursuant to the authority vested in the Director of the Federal Emergency Management Agency under Executive Order 12148, I hereby appoint David Skarosi of the Federal Emergency Management Agency to act as the Federal Coordinating Officer for this declared disaster.

I do hereby determine the following areas of the State of Minnesota to have been affected adversely by this declared major disaster:

Becker, Beltrami, Clay, Clearwater, Crow Wing, Hubbard, Itasca, Kittson, Mahnomen, Otter Tail, St. Louis, Wadena, and White Earth Reservation for Public Assistance.

(Catalog of Federal Domestic Assistance No. 83.516, Disaster Assistance)

Dated: August 21, 1995.

James L. Witt,

Director.

[FR Doc. 95–21394 Filed 8–28–95; 8:45 am]

BILLING CODE 6718–02–M

Mortgage Portfolio Protection Program

AGENCY: Federal Insurance Administration, FEMA.

ACTION: Notice.

SUMMARY: The Federal Insurance Administration (FIA), the Directorate within the Federal Emergency Management Agency (FEMA) responsible for the administration of the National Flood Insurance Program (NFIP), is announcing changes to the Mortgage Portfolio Protection Program (MPPP) and its response to comments and suggestions received regarding the MPPP. Changes have also been made to the MPPP Guidelines (and Appendices), where applicable, to comply with requirements mandated by the National Flood Insurance Reform Act of 1994 which was enacted on September 23, 1994.

EFFECTIVE DATE: October 1, 1994.

FOR FURTHER INFORMATION CONTACT: Tere Martin or Ed Connor, Federal Emergency Management Agency, Federal Insurance Administration, 500 C Street, SW., Washington, DC 20472. Mrs. Martin's telephone number is (202) 646–3430; and Mr. Connor's telephone number is (202) 646–3429.

SUPPLEMENTARY INFORMATION: In 1991, the Federal Insurance Administration (FIA) developed the Mortgage Portfolio Protection Program (MPPP) as a mechanism to be used as a last resort and at the option of a lending institution for securing flood insurance coverage for properties which are part of the lending institution's mortgage portfolio. The goals of the MPPP were and are, through the MPPP notification process, to encourage property owners whose structures are potentially susceptible to flood damage to purchase a conventional National Flood Insurance Program (NFIP) flood insurance policy, or, failing that, have the lending institution obtain an MPPP policy on the structure.

After two years' experience with the MPPP, on March 24, 1993, the FIA published a Notice in the **Federal Register** (58 FR 15874–15875) requesting public comments on the MPPP as outlined in the **Federal Register** of March 1, 1991 (56 FR 8882–8891).

Four questions were included in the 1993 Notice which were to be the subject of any responses.

A total of eight responses were received: two from different corporate parts of an insurance company participating in FIA's Write Your Own (WYO) Program that also participate in the MPPP, two from two other WYO companies participating in the MPPP, one from a WYO company not participating in the MPPP, two from vendor companies that service WYO companies, and one from a local government.

Regarding the questions, comments received, and FIA's response, they are as follows:

(1) Does the MPPP Work as Designed?

Five responses were received on this question. One WYO company stated that there was interest in the Program and that it was working for those lenders that used it but that there will be no serious participation until the threat of some type of financial penalty (against lenders that don't comply with the law) becomes reality through passage of pending legislation. It should be pointed out that the National Flood Insurance Reform Act of 1994 (the Reform Act) enacted September 23, 1994, contains provisions requiring increased compliance with the flood insurance purchase requirement mandated by the Flood Disaster Protection Act of 1973. The reform legislation clarifies the flood insurance purchase requirement, gives lenders more tools to comply, and applies financial penalties for noncompliance. Another WYO company indicated that it believed that the Program as designed will not be used a lot in view of the high rates it contemplates. It believed, however, that the Program helped convince lenders of the need for compliance, and helped them design a method to review the portfolios and obtain the information needed to issue conventionally underwritten flood policies. One WYO company that does NOT participate in the MPPP stated that the Program apparently is not working as it was intended because not many policies have been issued through the Program; that company also commented that there was some apparent misuse, such as a mortgagee using the Program at loan origination, and commented that the Program has apparently not improved compliance with the mandatory purchase provision. A WYO vendor stated that, when utilized, the MPPP seemed to work well as a compliance tool at the borrower's level and that the problem lies in persuading the lending community to utilize the MPPP, the thought being that the cost and coordination of conducting the portfolio audit and obtaining zone determination services is a deterrent. The respondent from the local government stated that such a program is worthwhile and one which would save much post-purchase agony and confusion resulting from either the lack of investigation or ignorance of the system. That respondent felt that a Program like the MPPP would especially help the first time home

buyers who, in all likelihood, would have no concept of flood insurance requirements or even its existence.

The FIA believes that the MPPP is working as it was intended. The MPPP was intended to be a tool to assist lenders who were interested in bringing their portfolios into compliance with flood insurance requirements. It was never the intent to have a large number of policies sold under the MPPP but simply to provide the necessary administrative vehicle for interested lenders to encourage borrowers to purchase flood insurance when required and, when there was no positive response from the borrower, to allow the lender to obtain the required coverage to either bring its mortgage loan portfolio into compliance with Federal requirements or to allow it to remain in compliance.

(2) What Improvements Should be Made to the Program?

Five responses were received on this question. One WYO company suggested that the stated intended use of the MPPP be clarified to state that it is intended to be used when the lender has reviewed one or more loans in its portfolio and determined such loan or loans to be on a building(s) located in a special flood hazard area (SFHA). That company commented that the existing language appears to state that the MPPP may only be used in conjunction with a mortgage portfolio review. The company believes that such a clarification would make the entire Program much more accessible to the lender. The FIA agrees and such a change is included in this Notice. Although the existing language was intended to limit the use of the MPPP to correcting flood insurance deficiencies of mortgage loan portfolios, it was not intended to limit such use to flood insurance needs derived from portfolio reviews only. This same WYO company also suggested that the requirement that WYO companies using the program maintain copies of the notification letters required to be sent by the lender to the borrower, when the lender, instead of the WYO company, actually assumes the responsibility of notifying the borrower, be changed. It reasoned that such lenders often will not provide copies of such letters to the WYO company. It therefore suggested that, under such circumstances, the WYO company, instead, be required to obtain a letter from an officer of the lending institution using the MPPP stating that it is complying with the mandatory letter notification requirements of the MPPP, and also to obtain samples of the letter notifications such a lender uses in this regard. The FIA believes that there is sufficient flexibility in the language contained in the answer to Question #21 of Addendum #4, National Flood Insurance Program Mortgage Portfolio Protection Program (MPPP) Questions and Answers, to allow WYO companies to address such circumstances, particularly because such circumstances were contemplated and addressed in the answer that appears in the 1991 Notice to Question #20 of Addendum #4. This same WYO company also suggested that coverage be provided against losses that might occur on loans during the 45 day letter cycle and to deduct the premium from the loss payment. Similarly, a WYO vendor suggested that the time frame of the letter notification cycle correspond to the 30 day protection period for the mortgagee in the mortgage clause to prevent any lapse of coverage. This vendor also suggested that the program allow for the acceleration of the issuance of the MPPP application prior to the end of the notification cycle so as to avoid any lapse of coverage for the lender. The FIA does not agree with the first three of these four suggestions. The FIA believes that the borrower must be given sufficient time to respond to the lender's notice. Coverage can then only begin following receipt of premium and after the appropriate waiting period. The MPPP was designed to be used by a lender when it discovers that flood insurance is missing from a loan on which it is required. It was not designed to be used to bring about flood coverage on a loan which currently has coverage but the lender believes the borrower may not renew. The existing mortgage clause and renewal provisions of the NFIP are sufficient to allow a lender that monitors the renewal of existing policies on loans in its portfolio to renew that policy on behalf of the mortgagor within a limited period of time after the policy expires to avoid any lapse of coverage to protect the interests of the lender. Also, there is no need for an MPPP, nor can it be used when there is an existing policy and the underwriting information is therefore available to write (or renew) that policy. Regarding the last of these suggestions, a WYO company may prepare an MPPP application in advance of the completion of the notification cycle so that the coverage is effective upon the completion of the cycle. Of course the WYO company must receive payment for that coverage far enough in advance of that date to comply with the waiting period requirement. Under the NFIP's waiting period rules, the payment must be received at least 30 days in advance of the completion of the notification cycle to comply with the new waiting period requirement established by the Reform Act. However, under the provisions of paragraph (e)(2) in section 524 of the Reform Act, the borrower should not be billed in his escrow account or otherwise for the premium until 45 days after receiving notification that flood insurance is required. This means that, initially, the premium must come from a source other than the borrower. Another WYO company suggested that FIA obtain the assistance of the different Federal entities who require this insurance in performing regular audits on compliance and notifying lenders who fail to comply of their failure to comply and the requirement of flood insurance on these properties. A second WYO vendor suggested that strict enforcement measures should be incorporated into regulations and a way be provided of verifying that insurance has been placed and provide stiff penalties if it has not. The FIA works directly with both the Federal financial institution regulatory and non-regulatory agencies on an ongoing basis to bring about the compliance intended by the Flood Disaster Protection Act of 1973. Great progress has been made in the past several years regarding the increased focus on flood insurance compliance in compliance reviews by these agencies. The Reform Act contains provisions to strengthen the mandatory flood insurance purchase requirements and FIA is now working with the federal entities for lending regulation in implementing the various mandatory provisions of the Reform Act. A WYO vendor suggested that if the goal (of the MPPP) is to sell policies as opposed to forcing the purchase of Standard Flood Insurance Policies, the MPPP rates are prohibitive, and should be reduced. As previously stated, the principal goal of the MPPP is to provide a voluntary, administrative tool to the mortgage lending and servicing industries that will assist them with their efforts to comply with mandatory flood insurance requirements. Its use is intended to allow flood insurance coverage to be obtained on any loan discovered, following loan origination, to be in need of such coverage when the borrower, having been notified of the need of and requirement for such coverage, refuses to obtain the coverage. The sale of additional policies, either conventionally underwritten or MPPP rated, although not the primary goal of the MPPP, is a logical secondary goal that will result from the use of the MPPP by the lending and servicing industries. The reason the rates are high

is the lack of underwriting information available on that property due to the non-responsiveness of the borrower. Without such data the FIA must assume that the flood risk to which that property is exposed is high and charge rates that reflect such high risk. A WYO vendor suggested that WYO companies be given more leeway in customizing the letter verbiage. The FIA believes that such leeway already exists. The beginning of the Initial Portfolio Review Letter Notification Process portion of Addendum #1 of the MPPP Guidelines and Requirements states that ''The lender/servicer [or their authorized representative] may add their own messages, make minor editorial modifications to the messages to conform to the style and practice of the WYO company or lender and structure the letter to their liking, but they may not alter the meaning or intent of the messages listed here for any of the letters.'' A WYO vendor suggested that the MPPP policy renewal process be simplified. It was suggested that the three letter renewal cycle be replaced with a single letter indicating that coverage can be obtained at standard rates. The issue of modifying the MPPP renewal process has also been raised by others outside of this process. The FIA agrees that some simplification to this process would be in the best interest of the MPPP without compromising the safeguards designed to protect the borrower. The FIA believes, however, that such simplification should be limited to reducing the number of renewal letters required to two instead of the currently required three or suggested one. This change is reflected in this Notice. A WYO vendor suggested that lenders be allowed to sign a generic vendor MPPP cancellation request form instead of the borrower (insured), since they must sign the application for the issuance of an MPPP policy. FIA agrees that a change in this requirement is needed, since it is reasonable to assume that the borrower will be as unlikely to respond to the lender's request for the borrower's signature on a cancellation request as the borrower was on the request to purchase the conventionally underwritten policy. This change is reflected in this Notice.

(3) Should the MPPP Become a Permanent Part of the National Flood Insurance Program?

Five comments were received on this question. Two WYO companies, one WYO vendor, and a local government believed that the MPPP should be made a permanent part of the NFIP. One WYO company that does not participate in the MPPP believes that the MPPP should be discontinued until there is more stringent enforcement of the mandatory purchase provisions of the NFIP, due to the lack of apparent use of the MPPP. The FIA believes that there is a continuing need for the MPPP capability to be available to the mortgage lending and servicing industries and will therefore make the MPPP available on a permanent basis as part of the NFIP. There is also little additional cost incurred in continuing the MPPP since it is already developed.

(4) What Data and Indicators are Available for Determining How Many Conventionally Underwritten Flood Insurance Policies Have Been Written as a Result of the MPPP Pilot?

Three comments were received on this question. These comments indicated that most of the policies written as a result of the use of the MPPP have been written initially either as a conventionally underwritten policy or were cancelled and converted to a conventionally underwritten policy shortly after being written as an MPPP policy. Most felt that there was no way to measure this, however. One WYO company vendor indicated that, utilizing property address tracking mechanisms, a system could be developed to provide such data. The FIA believes that any benefits that might be realized from undertaking the effort to explore the feasibility of developing such a capability would not be worth the time and expense to the NFIP, in light of its limited resources, and higher priorities for those resources.

WYO companies wishing to participate in the MPPP must sign an agreement to adhere to the MPPP Guidelines and Requirements for each new Arrangement year. After we have processed all Arrangements for each year, we will publish after each October 1, in the **Federal Register**, an updated list with the address and name of the contact person for each WYO company that has signed up for that Arrangement year.

The revised Mortgage Portfolio Protection Program Write Your Own Company Guidelines and Requirements, as referenced in this document, is reproduced in its entirety as Appendix A to this notice.

Dated: August 17, 1995.

Elaine A. McReynolds,

Administrator, Federal Insurance Administration.

Appendix A—Federal Emergency Management Agency, Federal Insurance Administration, National Flood Insurance Program; Mortgage Portfolio Protection Program, Write Your Own Company Guidelines and Requirements

Background

The Mortgage Portfolio Protection Program (MPPP) was introduced on January 1, 1991, as an additional tool, provided by the Federal Insurance Administration (FIA), to assist the mortgage lending and servicing industries, in response to their requests of the past few years, in bringing their mortgage portfolios into compliance with the flood insurance requirements of the Flood Disaster Protection Act of 1973.

The MPPP is not intended to act as a substitute for the need for mortgagees to review all mortgage loan applications at the time of loan origination and comply with flood insurance requirements as appropriate.

It is expected that the proper implementation of the various requirements of this MPPP will result in mortgagors, following their notification of the need for flood insurance, to either show evidence of such a policy, or to contact their local insurance agent or appropriate Write Your Own (WYO) company to purchase the necessary coverage. It is also intended that flood insurance policies be written under the MPPP only as a last resort, and only on mortgages whose mortgagors have failed to respond to the various notifications required by this MPPP.

The following represents the criteria and requirements that must be followed by all parties engaged in the sale of flood insurance under the National Flood Insurance Program's Mortgage Portfolio Protection Program:

Requirements for Participating in the MPPP

1. General

a. All mortgagors notified, in conjunction with this Program, of their need to purchase flood insurance must be encouraged to obtain a Standard Flood Insurance Policy (SFIP) from their local agent.

b. When a mortgagee or a mortgage servicing company discovers, at any time following loan origination, that one or more of the loans in its portfolio is determined to be located in a Special Flood Hazard Area (SFHA), and that

there is no evidence of flood insurance on such property (ies), then the MPPP may be used by such lender/servicer to obtain (force place) the required flood insurance coverage. The MPPP process can be accomplished with limited underwriting information and with special flat flood insurance rates.

c. In the event of a loss, the policy will have to be reformed if the wrong rate has been applied for the zone in which the property is located. Also, the amount of coverage may have to be changed if the building occupancy does not support that amount.

d. It will be the WYO company's responsibility to notify the mortgagor of all coverage limitations at the inception of coverage and to impose those limitations that are applicable at the time of loss adjustment.

2. WYO Arrangement Article III—Fees

With the implementation of the MPPP, there is no change in the method of WYO company allowance from that which is provided in the Financial Assistance/Subsidy Arrangement for all flood insurance written.

3. Use of WYO Company Fees for Lenders/Servicers or Others

a. No portion of the allowance that a WYO company retains under the WYO Financial Assistance/Subsidy Arrangement for the MPPP may be used to pay, reimburse or otherwise remunerate a lending institution, mortgage servicing company, or other similar type of company that the WYO company may work with to assist in its flood insurance compliance efforts.

b. The only exception to this is a situation where the lender/servicer may be actually due a commission on any flood insurance policies written on any portion of the institution's portfolio because it was written through a licensed property insurance agent on their staff or through a licensed insurance agency owned by the institution or servicing company.

4. Notification

a. WYO Company/Mortgagee—Any WYO company participating in the MPPP must notify the lender or servicer, for which it is providing the MPPP capability, of the requirements of the MPPP. The WYO company must obtain signed evidence from each such lender or servicer indicating their receipt of this information, and keep a copy in its files. An example of such evidence of receipt follows as Addendum #5.

b. Mortgagee to Mortgagor—In order to participate in the MPPP, the lender (or its authorized representative, which will typically be the WYO company providing the coverage through the MPPP) must notify the borrower of the following, at a minimum:

(1) The requirements of the Flood Disaster Protection Act of 1973,

(2) The flood zone location of the borrower's property,

(3) The requirement for flood insurance,

(4) The fact that the lender has no evidence of the borrower's having flood insurance,

(5) The amount of coverage being required and its cost under the MPPP, and

(6) The options of the borrower for obtaining conventionally underwritten flood insurance coverage and the potential cost benefits of doing so.

A more detailed discussion of the notification requirements is made a part of this program document in both Section 15 and as Addendums 1 and 2.

5. Eligibility

a. Type of Use—The MPPP will be allowed only in conjunction with mortgage portfolio reviews and the servicing of those portfolios by lenders and mortgage servicing companies. The MPPP is not allowed to be used in conjunction with any form of loan origination.

b. Type of Property—The standard NFIP rules apply, and all types of property eligible for coverage under the NFIP will be eligible for coverage under the MPPP.

6. Source of Offering

The force placement capability will be offered by the WYO companies only and not by the NFIP Servicing Agent (National Con-Serv [NCSI]).

7. Dual Interest

The policy will be written covering the interest of both the mortgagee and the mortgagor. The name of the mortgagor must be included on the Application Form. It is not, however, necessary to include the mortgagee as a named insured because the Mortgage Clause (Article 9.P of the Dwelling Form and Article 8.L of the General Property Form) affords building coverage to any mortgagee named as mortgagee on the Flood Insurance Application. If contents coverage for the mortgagee is desired, the mortgagee should be included as a named insured.

8. Term of Policy

NFIP policies written under the MPPP will be for a term of one year only (subject to the renewal notification process).

9. Coverage Offered

Both building and contents coverage will be available under the MPPP. The coverage limits available under the Regular Program will be $250,000 for building coverage and $100,000 for contents. If the WYO company wishes to provide higher limits that are available to other occupancy types such as other residential or non-residential, it may do so only if it can indicate that occupancy type as appropriate. If the mortgaged property is in an Emergency Program Community, then the coverage limits available will be $35,000 for building coverage and $10,000 for contents. Again, if the higher limits are desired for other types of property, then the building occupancy type must be provided at the inception of the policy or when that information may become available, but it must be prior to any loss.

10. Policy Form

The current SFIP Dwelling Form and General Property Form will be used, depending upon the type of structure insured. In the absence of building occupancy information, the Dwelling Form should be used.

11. Waiting Period

The NFIP rules for the waiting period and effective dates apply to the MPPP.

12. Premium Payment

The current rules applicable to the NFIP will apply. The lender or servicer (or Payor) has the option to follow its usual business practices regarding premium payment, so long as the NFIP rules are followed.

13. Underwriting—Application

a. The MPPP will require less underwriting data than is normally required under the standard NFIP rules and regulations. The MPPP data requirements for rating, processing and reporting are, at a minimum:

(1) Name and mailing address of insured (mortgagor—also see Dual Interest),

(2) Address of insured (mortgaged) property,

(3) Community information (complete NFIP map panel number and date; program type, Emergency or Regular) countywide maps,

(4) Occupancy type (so statutory coverage limits are not exceeded. This data may be difficult to obtain. Also see Coverage Offered.),

(5) NFIP flood zone where property is located (lender must determine, in order to determine if flood insurance requirements are necessary and to use the MPPP),

(6) Amount of coverage,
(7) Name and address of mortgagee,
(8) Mortgage loan number,
(9) Policy number.

b. No elevation certificates will be required as there will be no elevation rating.

c. For more detailed information regarding reporting requirements, see the WYO Transaction Record Reporting and Processing (TRRP) Plan.

14. Rates (per $100 of insurance)

Zone	Building	Contents
A Zone—All building/occupancy types	$1.25	$1.25
V Zone—All building/occupancy types	$3.00	$3.00
A99 Zone—All building/occupancy types	.35	.35

15. Policy Declaration Page Notification Requirements

In addition to the routine information, such as amounts of coverage, deductibles and premiums, that a WYO company may place on the Policy declarations page issued to each insured under the NFIP, the following messages are required:

a. This policy is being provided for you as it is required by Federal law as has been mentioned in the previous notices sent to you on this issue. Since your mortgage company has not received proof of flood insurance coverage on your property in response to those notices, we provide this policy at their request.

b. The rates charged for this policy may be considerably higher than those that may be available to you if you contact your local insurance agent (or the WYO company at ...).

c. The amounts of insurance coverage provided in this policy may not be sufficient to protect your full equity in the property in the event of a loss.

d. You may contact your local insurance agent (or WYO company at ...) to replace this policy with a conventionally underwritten Standard Flood Insurance Policy, at any time, and typically at a significant savings in premium.

The WYO company may add other messages to the declarations page and make minor editorial modifications to the language of these messages if it believes any are necessary to conform to the style or practices of that WYO company, but any such additional messages or modifications may not change the meaning or intent of the above messages.

Since the amount of underwriting data obtained at the time of policy inception will typically be limited, the extent of any coverage limitations (such as, when replacement coverage is not available or coverage is limited because the building has a basement or is considered an elevated building with an enclosure) will be difficult to determine. It is, therefore, the responsibility of the WYO company to notify the mortgagor/insured of all coverage limitations at the inception of coverage and impose any that are applicable at the time of the loss adjustment.

16. Policy Reformation—Policy Correction

Article 9.F.2. of the Dwelling Policy and Article 8.E.2. of the General Property Policy will apply as appropriate.

Examples of circumstances under which reformation or correction might be needed would be:

Policy Reformation—The wrong flat rate was applied for the zone in which the property was actually located.

Policy Correction—The amount of coverage exceeds the amount available under the NFIP for the type of building occupancy that represents the building insured. In such cases, the amount of coverage would have to be adjusted to the amount available and any appropriate premium adjustments made.

17. Coverage Basis—Actual Cash Value or Replacement Cost

There are no changes from the standard practices of the NFIP for these provisions. The coverage basis will depend on the type of occupancy of the building covered and the amount of coverage carried.

18. Deductible

A $500 Deductible is applicable for policies written under the MPPP.

19. Expense Constant and Federal Policy Fee

There is no change from the standard practice. The Expense Constant and Federal Policy Fee in effect at the time the MPPP policy is written must be used.

20. Renewability

The MPPP policy is a one-year policy. Any renewal of that policy can occur only following the full notification process spelled out in addendum #2 that must take place between the lender (or its authorized representative) and the insured/mortgagor, when the insured/mortgagor has failed to provide evidence of obtaining a substitute flood insurance policy.

21. Cancellations

a. Existing Policy—When the mortgagor provides evidence of a flood insurance policy, from any source, that is currently in effect and has been in effect prior to the effective date of the MPPP policy, the MPPP policy may be cancelled flat with a full refund of premium, provided that the policy in effect is acceptable to the mortgagee. If the existing policy is an NFIP policy (WYO or direct business), the NFIP rules require that one of the NFIP policies must be cancelled. The full premium, including the expense constant and Federal policy fee, will be returned to the payor. The WYO servicing allowance is not earned by the WYO company.

b. New Flood Insurance Policy—When the mortgagor/borrower purchases a flood insurance policy, from any source, following notification of the need for the policy, the MPPP policy may be cancelled but on a pro-rata basis. Any premium refund may be calculated with or without the pro rata share of the expense constant and Federal policy fee, depending on the company's normal business practice.

c. Other—The NFIP Insurance Manual rules for Cancellation/Nullification Notices are to be followed, when applicable.

d. Signature Requirement—The signature required on the Cancellation/Nullification Request Form is that of an authorized representative of the mortgage lender whose name appears on the NFIP flood insurance application form that resulted in the MPPP policy being purchased or the signature of an authorized representative of a subsequent owner of that loan.

22. Endorsement

An MPPP policy may not be endorsed to convert it directly to a conventionally underwritten SFIP. Rather, a new policy application, with a new policy number, must be completed according to the underwriting requirements of the SFIP, as contained in the NFIP Insurance Manual. The MPPP policy may be endorsed to assign it under rules of the NFIP. It may also be endorsed for other reasons such as increasing coverage.

23. Assignment to a Third Party

Current NFIP rules remain unchanged; therefore, an MPPP policy may be assigned to another mortgagor or mortgagee. Any such assignment must be through an endorsement, however.

24. Article XIII—Restrictions Other Flood Insurance

ARTICLE XIII of the Arrangement is also applicable to the MPPP and, as

such, does not allow a company to sell other flood insurance that may be in competition with NFIP coverage. This restriction, however, applies solely to policies providing flood insurance. It also does not apply to insurance policies provided by a WYO company in which flood is only one of several perils provided, or when the flood insurance coverage amounts are in excess of the statutory limits provided under the NFIP or when the coverage itself is of such a nature that it is unavailable under the NFIP, such as blanket portfolio coverage.

Mortgage Portfolio Protection Program (MPPP) Guidelines and Requirements—Addendum #1

Initial Portfolio Review Letter Notification Process

Once it has been determined by the lender/servicer or its representative that flood insurance is needed on mortgages in the lender's portfolio, and there is no evidence of flood insurance, and it decides to use FIA's MPPP to assist in bringing the lender's portfolio into compliance with flood insurance, then the following notification process must be used.

This process will consist of three initial notification letters. Each letter will contain certain messages, at a minimum, in the body of the letter. The lender/servicer (or their authorized representative) may add their own messages, make minor editorial modifications to the messages to conform to the style and practice of the WYO company or lender and structure the letter to their liking, but they may not alter the meaning or intent of the messages listed here for any of the letters.

Each letter will contain mandatory messages on one or more of the following items: (1) The requirements of the Flood Disaster Protection Act of 1973, (2) reminding the insured of the previous letters sent that resulted in the current flood insurance policy, (3) the high premiums on the current policy, (4) potentially inadequate coverage limits, (5) coverage limitations, and (6) the options available to the insured.

Initial Notification Letter to Mortgagor

The first letter is to be issued after the review of the lender's portfolio reveals the need for the flood insurance coverage and the absence of it. This letter must contain, at a minimum, the following messages:

1. ''The Flood Disaster Protection Act of 1973, a Federal law, requires that flood insurance be purchased and maintained on mortgage loans for buildings (and their contents, if appropriate) for the life of the loan for buildings located in a Special Flood Hazard Area shown on a map published by FEMA. This applies to such loans from lending institutions that are under the jurisdiction of a Federal regulatory agency or instrumentality.''

2. ''We have determined that your property (building), on which we hold the mortgage loan, is located in a SFHA and, therefore, you are required by law to have a policy of flood insurance on that property.''

- This letter must then include language advising the mortgagor that in the event they wish to challenge the zone determination, they should provide written factual evidence supporting their challenge obtained from a community official, registered engineer, architect or surveyor, stating the specifics of the location of the building and the reason for their challenge. The letter must include reference to the appeal process required in Section 524 of the National Flood Insurance Reform Act of 1994, after regulations are promulgated to establish the procedures and process for such review. FEMA expects to issue the regulations by late October 1995.
- The lender/servicer is reminded that since the Act places the responsibility of determining the flood zone location of each mortgaged property on the lender/servicer, he cannot discharge that responsibility by simply obtaining some form of self certification from the mortgagor. If the lender wishes to change its original determination on the location of the mortgagor's property based upon information submitted by the mortgagor, the lender/servicer must convince itself, after reviewing that submission, that its original determination was in error and make any such change based on that review. He should not simply accept unsubstantiated allegations, from whatever source, as to the building's flood zone location. The ultimate responsibility for making such determinations under the statute rests with the mortgagee, not the mortgagor.

3. ''There is no evidence in your mortgage loan file of your having a flood insurance policy on your property. In case this information is in error, please contact us at _____.''

4. ''If you do not have a flood insurance policy on this property, you may wish to contact your local insurance agent (or WYO company at _____).''

5. ''If you do not respond within 45 days of this letter, either providing evidence of a flood insurance policy in effect on this property, or requesting that we provide you with such coverage, the necessary flood insurance coverage will be provided for you. In that event, since certain insurance underwriting information about your property that is necessary to determine the appropriate flood insurance rate for your policy would not have been obtained, due to your not responding, the Federal government's Mortgage Portfolio Protection Program's flood insurance rates will have to be used. These rates may be considerably higher than those that could be obtained for you if you respond to this notice.''

This letter, or an attachment, must also include such other information as: (1) the name of the lender/servicer, (2) the mortgage loan number, (3) the address of the property in question, (4) the flood zone in which the property has been determined to be located, (5) the amount of flood insurance being required, and (6) coverage limitations.

The Second Initial Notification Letter

This letter will be sent 30 days following the first initial notification letter if no response has been received from the mortgagor. It will contain, at a minimum, the following messages:

1. ''About a month ago you were notified that Federal law requires all mortgages, such as yours, on properties determined to be located in a Special Flood Hazard Area, to be covered by a policy of flood insurance.''

2. ''That letter mentioned that if you did not respond positively within 45 days from that letter, it would be necessary to obtain a policy of flood insurance for you.''

3. ''This is to remind you that since you have not responded to the earlier notice as yet, and if you do not respond within the next fifteen days (or the actual expiration date), flood insurance, as mentioned previously, will be obtained on your property, on your behalf.''

4. ''In the event that you do not respond and the coverage must be obtained as mentioned, the cost of that coverage may be significantly higher than the premium that you could obtain if you were to contact your local insurance agent (or WYO company at ...).''

Third and Final Initial Notification Letter

This letter must be sent to the mortgagor accompanying the flood insurance policy declarations page.

This letter must be sent as soon after the end of the 45 day notification period as possible, if no positive response has been received to the two previous

notification letters. It must contain the following messages, at a minimum:

1. ''This letter is to inform you that a policy of flood insurance has been obtained on your behalf, to cover the mortgage on your property, as required by the Flood Disaster Protection Act of 1973.''

2. ''You have been notified on two previous occasions explaining the circumstances surrounding your need to have flood insurance coverage and explaining your options, but to date no response has been received.''

3. ''Attached is the flood insurance policy purchased on your behalf and its accompanying declarations page that explains: the amount of coverage purchased on your behalf, its cost, some limitations to that coverage, and the options you may still wish to exercise to obtain similar coverage, but typically at a significantly lower cost.''

4. ''If you purchase another flood insurance policy and notify us, or contact us to request that we purchase a substitute policy under the NFIP for you, we will cancel this policy and issue you a refund for the unearned portion of the premium, if we deem that the other policy is acceptable to satisfy the requirements.''

Mortgage Portfolio Protection Program (MPPP) Guidelines and Requirements—Addendum #2

MPPP Renewal/Expiration Notification Process

When an MPPP policy has been purchased and the expiration date of that policy is approaching the end of its one year term, and the insured has not requested or produced a substitute policy of flood insurance, the following notification process will be followed.

This process will consist of a total of three (or, at the lender's option, two) renewal MPPP letters. Each letter will contain certain required messages within the body of the letter. The lender/servicer (or their authorized representative) *may* add their own messages, make minor editorial modifications to the messages to conform to the style and practice of the WYO company or lender and structure the letter to their liking, but they *may not* alter the meaning or intent of the messages listed here for any of the letters.

Each letter will contain mandatory messages on one or more of the following items: (1) reminding the insured of the previous letters sent that resulted in the current flood insurance policy that is about to expire; (2) the requirements of the Flood Disaster Protection Act of 1973; (3) the high premiums on the current policy; (4) potentially inadequate coverage limits; (5) coverage limitations, and (6) the options available to the insured.

First MPPP Renewal/Expiration Notice (Letter)

The first MPPP renewal letter will be sent to the insured/mortgagor at least 45 days prior to the renewal/expiration of the MPPP policy. It will, at a minimum, contain the following messages:

1. ''This letter is to notify you that the flood insurance policy that was required to be purchased on your property about a year ago is about to expire.''

2. ''When you were originally notified of the need for this coverage, it was explained that the Flood Disaster Protection Act of 1973, a Federal law, requires that flood insurance be purchased and maintained for the life of the loan, on mortgage loans for buildings (and their contents, if appropriate) located in a Special Flood Hazard Area shown on a map produced by the Federal Emergency Management Agency.''

3. ''The premium on the flood insurance policy currently in effect and written on your behalf, and due to expire, may be considerably higher than would be the case if you had responded to the suggestions contained in the previous notices sent you, recommending that you contact your local insurance agent (or the WYO company) to obtain a conventionally underwritten Standard Flood Insurance Policy.''

4. ''As has been mentioned in previous notices, you may wish to replace this policy with a conventionally underwritten Standard Flood Insurance Policy now, and benefit from rates that potentially are significantly lower than the rates being used with this policy.''

5. ''Failure to respond to this notice within 45 days (or by *[date]*) will result in this policy being renewed, and at rates that are most likely to be much higher than are otherwise available.''

Second MPPP Renewal/Expiration Notice (Letter)

The requirement for the Second MPPP Renewal/Expiration Notice (Letter) is optional on the part of the participating WYO company. If such a company decides not to issue the second of the three notices (letters), then the Third MPPP Renewal/Expiration Notice (Letter) required in the March 1, 1991, **Federal Register** will serve as the second and final notice required. The language of such a letter may be modified, if needed, to reflect the fact that only two such letters were sent.

Third MPPP Renewal/Expiration Notice (Letter)

The third and final notice will be sent out as part of the renewed MPPP policy. The notice containing the following required messages may be sent as a cover letter or an attachment to the Policy declarations page and policy itself, or the required messages may be included on the declarations page that accompanies the renewal policy. It must contain the following messages:

1. ''Since you have not responded to our previous notices that your flood insurance policy, which is required by Federal law, was about to expire, we have renewed that policy for the next year.''

2. ''As has been previously explained, the Flood Disaster Protection Act of 1973, a Federal law, requires that flood insurance be purchased and maintained on mortgage loans for buildings (and their contents, if appropriate) for the life of the loan, for property located in a Special Flood Hazard Area shown on a map produced by the Federal Emergency Management Agency.''

3. ''The premium on this flood insurance policy just renewed may be considerably higher than would be the case if you had contacted your local insurance agent (or WYO company at ...), which you may still do, to obtain a conventionally underwritten Standard Flood Insurance Policy.''

4. ''If you purchase another flood insurance policy and notify us, or contact us to request that we purchase a substitute policy under the NFIP for you, we will cancel this policy and issue you a refund for the unearned portion of the premium, if we deem that the other policy is acceptable to satisfy the requirements.''

National Flood Insurance Program Mortgage Portfolio Protection Program (MPPP)—Addendum #3

Portfolio Review Considerations for Lenders/Servicers Prior to Participating in the MPPP—Questions and Answers

1. Q. What is the MPPP and who is this Q & A aimed at?

A. The MPPP is a tool for providing flood insurance coverage to properties which are part of a lending institution's mortgage portfolio when such properties have been determined to be in a Special Flood Hazard Area and therefore subject to the flood insurance purchase requirement mandated by Federal law. The MPPP is aimed at WYO companies, lenders/servicers participating in the MPPP, Federal regulatory agencies and other interested parties.

2. Q. What is the first step in using the MPPP?

A. The MPPP is only intended to be utilized when the lender (or its representative) has reviewed its portfolio and determined which of the loans are on buildings located in a Special Flood Hazard Area (SFHA), and, therefore, in need of flood insurance.

3. Q. What source of information should the MPPP participant, or their authorized representative, be using in reviewing a loan portfolio, to determine flood zone location of the properties in question?

A. The flood insurance maps published by the Federal Emergency Management Agency (FEMA), augmented by other official documentation available from local officials or other sources, as may be deemed necessary.

The Flood Disaster Protection Act of 1973, which imposes the flood insurance requirement, makes specific reference to ''areas identified by the Secretary (since changed to Director [of FEMA]) as an area having special flood hazards''. The National Flood Insurance Act of 1968, as amended, charged FEMA with the responsibility of identifying areas which have special flood hazards. Therefore, the official source of information that serves as the basis for identifying such areas is the maps published by FEMA.

4. Q. What if a source of information other than the FEMA maps is used as the basis for determining the flood zone location of properties?

A. The lender may be risking erroneous determinations, thereby potentially placing the lender in a position of a liability exposure, bad customer relations and/or problems with its Federal regulatory agency or worse.

5. Q. Does it mean that if the system used to make these flood zone determinations is not based on the FEMA maps that it should not be used?

A. Due to the potential for problems as mentioned above, the lender must be careful as to the basis behind the system it uses to make these flood zone determinations. Also, since the lender must keep evidence of the determination in every mortgage file, if that evidence doesn't reflect the map panel used to make the determination, the lender may have difficulty proving to its Federal regulatory agency, or in court if the need arose, that the lender is complying with the law.

6. Q. What flood zone determination information should the lenders keep in each mortgagor's file to indicate evidence of compliance?

A. Pursuant to Section 528 of the National Flood Insurance Reform Act of 1994, FEMA is developing a Standard Flood Hazard Determination Form (SFHDF) for use by lenders when determining, in the case of a loan secured by improved real estate or a mobile home, whether the building or mobile home is located in a special flood hazard area. The SFHDF contains a section for recording flood zone determination information. FEMA expects to issue the regulation establishing the SFHDF by late June 1995. All lenders subject to the Reform Act will have to place a copy of the SFHDF in each mortgagor's file to indicate evidence of compliance.

7. Q. What version of the flood map should be used in conjunction with the MPPP portfolio review?

A. The FEMA map in effect at the time of the portfolio review is the map that must be used. The provisions of the Flood Disaster Protection Act of 1973 as amended by the Reform Act (1) require the lender to notify the borrower that the borrower should obtain flood insurance, at the borrower's expense, if, at any time during the term of the loan, the lender determines the improved real estate or mobile home securing the loan is located in an area identified by FEMA as an area having special flood hazards and in which flood insurance is available but the property is not covered by flood insurance; and (2) require the lender to purchase coverage on behalf of the borrower if the borrower fails to purchase such flood insurance within 45 days after notification by the lender.

8. Q. Doesn't the fact that the MPPP was designed to assist lenders/servicers in bringing their portfolios into compliance with flood insurance requirements mean that they will be dealing with loans that can range from being very new to being many years old, and that the maps that may have been in effect at the time of the loan origination might not be readily available now?

A. Yes. This does not present a problem since, as mentioned in no. 7 above, compliance with the requirements of the Reform Act requires use of the map in effect at the time of the review rather than the map in effect at the time of the loan origination.

9. Q. Once the lender/servicer's portfolio has been reviewed and determinations have been made as to which properties need flood insurance, is there anything critical that the lender (or its representative) should consider before beginning the process of mailing the initial notices to their mortgagors?

A. Yes, how the mailing will be handled and the results of that mailing. There is a strong likelihood that, once the mailings begin, a certain percentage of the mortgagor recipients of those notices will challenge the notices. Some of those challenges will be directed, in one way or another, to the lender/servicer, regardless of any instructions in the notices. The lender should therefore determine at the outset whether it wants the notices to be sent all at once, or metered out so many at a time. The larger the volume, the more consideration to the metering approach that should be given.

Also, the lender needs to consider how it wants the review of its portfolio carried out. If the results of the review are provided to the lender all at the same time and the lender decides to send the notices to the mortgagors so many at a time, it may be exposing itself to additional liability. This could occur since the lender was aware of all the mortgages in its portfolio that needed flood insurance, but acted on only a certain number at a time. The lender, therefore, needs to consider having the portfolio review carried out in such a fashion that the results of each portion of that review are made available to the lender as soon as they are available from the party conducting the review, and are acted upon as soon as possible thereafter.

National Flood Insurance Program Mortgage Portfolio Protection Program (MPPP) Questions and Answers—Addendum #4

1. Q. What is the MPPP and what is it designed to do?

A. The MPPP is a tool made available to the lending and mortgage servicing industries that provides them with the capability to write flood insurance policies quicker and easier that will assist them with their efforts to bring their portfolios into compliance with flood insurance requirements.

2. Q. Is this available to lenders for all their loans?

A. No! It may only be used in conjunction with loan portfolios. It may not be used as a compliance vehicle for loan originations.

3. Q. Is the MPPP mandatory for lenders/servicers?

A. No! It is voluntary, but lenders/servicers that believe their loan portfolios may not be in compliance with flood insurance requirements are strongly encouraged to use it if they believe it could be helpful.

4. Q. What are the benefits of the MPPP?

A. The specific benefits will vary with the category of participant as follows:

- For lenders/servicers.
- Portfolios can be brought into compliance satisfying the law and regulators.

- Reduce, limit or eliminate certain potential liability.
- Protect equity (lender/servicer, borrower).
  - For WYO companies.
- Increased policy sales/fees.
- Increased lender/servicer client base.
  - For insurance agents.
- Increased policy sales.

5. Q. Is it possible for WYO companies and insurance agents to benefit from the MPPP even if they don't directly participate in it?

A. Yes! Property insurance (fire and auto) is already being sold by insurance agents to many of these same borrowers because lenders require it in conjunction with home mortgages and auto loans. As a result, many agents already have established business relationships with their local lenders. These agents could alert these lenders to the availability of the MPPP and advise them as to how to proceed even if the agent was not going to directly participate.

At the same time the agent could offer to assist the lender with determining the flood zone location of the addresses of all new mortgage loan applications for that lender and ask, in return, for the opportunity to write all the flood insurance policies on those properties that are determined to need it. The notices that will be sent to the borrowers will generate inquiries and sales.

6. Q. How will flood policies actually be sold under the MPPP?

A. Policies will be written through the insurance companies participating in FIA's Write Your Own (WYO) Program.

7. Q. Will all the insurance companies participating in the WYO Program be writing policies under the MPPP?

A. Any WYO company may write policies under the MPPP, but only those that traditionally have dealt with the lending industry are expected to participate in this Program. Any such company that does wish to participate must agree in writing to comply with the requirements of the MPPP.

8. Q. Will FIA maintain and publish a list of the WYO companies that participate in the MPPP?

A. Yes! Such a list will be developed and both modified and republished as needed.

9. Q. What is the first thing a lender/servicer should do if it wishes to utilize the MPPP?

A. The lender must review its loan portfolio and determine which of the properties are located in Special Flood Hazard Areas (SFHA).

10. Q. When a lender/servicer decides to utilize the MPPP, must they use the MPPP to service their portfolio all at the same time?

A. No! Lenders/servicers should carefully analyze the pros and cons of phasing in their portfolio compliance effort. (See the Q & A that FIA has developed on ''Portfolio Review Considerations'').

11. Q. Is use of the MPPP limited to only those properties located in SFHAs?

A. Yes!

12. Q. What will happen if a policy is written through the MPPP, but the property is *not* located in an SFHA?

A. If no loss has occurred at the time the situation is discovered but the mortgagee wants the borrower to have flood insurance even though the property is not in an SFHA, the situation can be corrected by cancelling the MPPP policy and rewriting the coverage under a conventional Standard Flood Insurance Policy (SFIP) with a refund of any premium overpayment. If such a situation is discovered after a flood loss has occurred, the claim will be honored. However, the MPPP policy would have to be cancelled and the coverage rewritten under a conventional SFIP with a refund of any premium overpayment. The loss should then be reported under the new policy number. Under both scenarios, the effective date of the conventional SFIP would be the same as that of the cancelled MPPP policy.

13. Q. What differences are there between a flood policy sold under the traditional flood insurance program and one under the MPPP?

A. The actual policy and coverage are the same, but there are differences primarily in the areas of:

- Rates,
- A letter notification process to the borrowers,
- The underwriting information necessary.

14. Q. What are the rate differences?

A. The rates under the MPPP are, on the average, several times those used under the traditional flood insurance program.

15. Q. Why are the MPPP rates so high?

A. Due to the fact that the borrower did not respond to the notices sent, key information necessary to underwrite the risk is not available. Therefore, it is necessary to assume that those properties have a very high risk and the rates charged reflect that risk.

16. Q. Does the borrower have any option in avoiding the MPPP policy with its higher cost?

A. Yes! They can simply contact their local insurance agent, obtain a conventionally underwritten flood insurance policy and present it to their lender/servicer.

17. Q. If a borrower pays off the mortgage loan, can the MPPP then be cancelled?

A. Yes, but any refund due the borrower will be paid on a pro-rata basis.

18. Q. If the borrower or lender/servicer sells or assigns the mortgage to another borrower or lender/servicer, can the MPPP policy be assigned?

A. Yes! The Standard Flood Insurance Policy language allows for the assignment of all NFIP policies. Any such assignment of an NFIP policy must be done by way of an endorsement.

19. Q. Must a WYO company participating in the MPPP maintain copies of all its MPPP documents?

A. The companies are responsible for the data on each Application Form, in keeping with its normal practices. Although some of the data beyond that required does not have to be reported, the companies are still responsible for it. The WYO companies may use their normal business practices in determining which form they will use to retain data, forms or other required information.

20. Q. Who initiates the letter notification process required by the MPPP?

A. The letter notification process is one of the requirements of the MPPP. The FIA requires any WYO company that wishes to participate in the MPPP to agree to comply with all those requirements. However, lenders/servicers differ on how their force placed hazard insurance notices are sent to their borrowers. Some lenders insist on sending such notices directly. Others let the insurance company, with whom the force placed policies are written, send out the notices. Since the MPPP is a part of the NFIP, then any policies written through the MPPP must have been written in compliance with all of its requirements, regardless of the entity that actually sends the notices.

21. Q. Must the lender or WYO company maintain copies of the notification letters?

A. The WYO company is responsible for assuring that the letters are sent regardless of whether they or the lender actually sends them. The WYO company must maintain some form of evidence that the letters are being sent. It will be the WYO company's decision as to the form the evidence takes, such as paper copies, micro fiche, computer images or a record of the mortgagor addresses to whom the letters were sent with an indication as to the date when those mortgagors were notified.

22. Q. What does a WYO company do if all of the information FIA requires on

the declarations (DEC) page won't fit on that page?

A. The company may wish to include some of that information on the DEC page and some on an ''endorsement.'' In such a case, it should indicate an endorsement number on the DEC page.

23. Q. Does a policy DEC page have to be issued each time an MPPP policy is renewed?

A. Yes, and it must accompany the final renewal notification letter.

24. Q. When an MPPP is renewed, can the same policy number that was assigned to the original MPPP policy be used?

A. Yes!

25. Q. Will the rating credits that will be available in a community participating in the Community Rating System (CRS) apply to a policy written under the MPPP?

A. No!

26. Q. The MPPP requirements call for the full map panel number and date to be obtained. What does the WYO company do with that information since the NFIP Application Form in use today doesn't contain enough space to even capture all this information?

A. The WYO companies have never been required to use NFIP forms in the WYO program, but have been free to develop their own forms. They are, however, responsible for all required data, some of which must be reported and some of which isn't, but must be kept in the company files. The data requirements for the MPPP follow the same conditions. The full map panel number for that panel used to determine flood zone location and rate the policy is the one that must be captured and maintained. The majority of the maps FIA has published for many years have the ten digit number, suffix and date for each panel. Some of the maps still in use have only the six digit community number and date. The six digit community number cannot be used when the ten digit number exists.

27. Q. Is contents coverage under the MPPP optional?

A. Yes! The lender must decide whether or not it will require it as part of the MPPP policy.

28. Q. What is meant by the term ''coverage limitations'' that is mentioned in the MPPP materials?

A. Primarily Actual Cash Value coverage instead of Replacement Cost coverage, when appropriate. It could also apply, however, to the situation where only an amount to cover the loan balance is purchased which may be insufficient to cover the full insurable value of the property. The WYO company will have to determine what limitations may apply depending on the decisions of the lender/servicer as to how it wants to use the MPPP and the amount of underwriting information obtained.

29. Q. The notification process contains standards for the letters being mailed and the MPPP policy being written such as 45, 30, and 15 days. Must these standards be strictly adhered to?

A. There are a number of standards similar to this in the NFIP and some limited flexibility has been built into the actual implementation process through the underwriting review process that FIA uses with the companies. FIA is preparing modifications of that review process to incorporate the MPPP criteria and will attempt to incorporate such flexibility into these changes.

30. Q. May WYO companies, under the requirements of the MPPP, use any portion of the MPPP fee they retain, for any purpose other than as a commission to an insurance agent or agency for their writing the policy, such as for flood zone determinations or the tracking of loans?

A. No!

The National Flood Insurance Program's Mortgage Portfolio Protection Program Implementation Package; Addendum #5

Receipt for Materials and Agreement to Adhere to Criteria and Requirements

The Federal Insurance Administration (FIA) has published a package of materials for implementing their Mortgage Portfolio Protection Program (MPPP). This package contains the Criteria and Requirements that the insurance companies participating in FIA's MPPP through FIA's Write Your Own (WYO) program and any lending institutions and/or mortgage servicing or similar companies must adhere to when participating in the MPPP.

The Implementation Package contains the following:

- A cover letter from the FIA Administrator to the WYO companies and other users of the MPPP.
- A Guide for WYO Companies, Lending Institutions, Mortgage Servicers and Other Potential Users
- Addendum #1—Initial Portfolio Review Letter Notification Process
- Addendum #2—Portfolio Review Renewal Letter Notification Process
- Addendum #3—Portfolio Considerations Q & A
- Addendum #4—MPPP Q & A
- Addendum #5—Receipt for Materials and Agreement to Adhere to Criteria and Requirements (this document)

This ''Receipt and Agreement,'' together with the Package referenced above, must be presented by any WYO company that offers the MPPP to a lender/servicer; and the lender/servicer that agrees to participate in the MPPP to assist in bringing its portfolio into compliance with flood insurance requirements must sign this ''Receipt and Agreement'' as evidence of having actually received the Package and agreeing to comply with the criteria and requirements contained therein.

This acknowledges that the package of implementation materials for the Federal Insurance Administration's (FIA) Mortgage Portfolio Protection Program (MPPP) has been received.

_____
(Name of WYO company representative providing the Package)

_____
(Name of the WYO company being represented)

_____
(Date of receipt)

_____
(Name of lender/mortgage representative receiving the Package)

_____
(Name of lender/mortgage servicer being represented)

_____
(Date of receipt)

Note: WYO companies are required to keep a copy of this Receipt in their files for each lender/mortgage servicer to which they provide services under the MPPP. Lenders/mortgage servicers may wish to do the same.

[FR Doc. 95–21400 Filed 8–28–95; 8:45 am]

BILLING CODE 6718–03–P

FEDERAL RESERVE SYSTEM

Walter W. Luehrman, et al.; Change in Bank Control Notices; Acquisitions of Shares of Banks or Bank Holding Companies

The notificants listed below have applied under the Change in Bank Control Act (12 U.S.C. 1817(j)) and § 225.41 of the Board's Regulation Y (12 CFR 225.41) to acquire a bank or bank holding company. The factors that are considered in acting on the notices are set forth in paragraph 7 of the Act (12 U.S.C. 1817(j)(7)).

The notices are available for immediate inspection at the Federal Reserve Bank indicated. Once the notices have been accepted for processing, they will also be available for inspection at the offices of the Board of Governors. Interested persons may express their views in writing to the Reserve Bank indicated for that notice or to the offices of the Board of Governors. Comments must be received not later than September 12, 1995.

A. Federal Reserve Bank of Kansas City (John E. Yorke, Senior Vice President) 925 Grand Avenue, Kansas City, Missouri 64198:

1. Walter W. and Pearl M. Luehrman, Trustees, Walter W. and Pearl M. Luehrman, Revocable Living Trust, all of Higginsville, Missouri; to acquire an additional 1.95 percent, for a total of 26.34 percent, of the voting shares of Higginsville Bancshares, Inc., Higginsville, Missouri, and thereby indirectly acquire First State Bank of Higginsville/Odessa, Higginsville, Missouri.

Board of Governors of the Federal Reserve System, August 23, 1995.

Jennifer J. Johnson,

Deputy Secretary of the Board.

[FR Doc. 95–21346 Filed 8–28–95; 8:45 am]

BILLING CODE 6210–01–F

NationsBank Corporation, et al.; Formations of; Acquisitions by; and Mergers of Bank Holding Companies

The companies listed in this notice have applied for the Board's approval under section 3 of the Bank Holding Company Act (12 U.S.C. 1842) and § 225.14 of the Board's Regulation Y (12 CFR 225.14) to become a bank holding company or to acquire a bank or bank holding company. The factors that are considered in acting on the applications are set forth in section 3(c) of the Act (12 U.S.C. 1842(c)).

Each application is available for immediate inspection at the Federal Reserve Bank indicated. Once the application has been accepted for processing, it will also be available for inspection at the offices of the Board of Governors. Interested persons may express their views in writing to the Reserve Bank or to the offices of the Board of Governors. Any comment on an application that requests a hearing must include a statement of why a written presentation would not suffice in lieu of a hearing, identifying specifically any questions of fact that are in dispute and summarizing the evidence that would be presented at a hearing.

Unless otherwise noted, comments regarding each of these applications must be received not later than September 22, 1995.

A. Federal Reserve Bank of Richmond (Lloyd W. Bostian, Jr., Senior Vice President) 701 East Byrd Street, Richmond, Virginia 23261:

1. NationsBank Corporation, Charlotte, North Carolina; to acquire 100 percent of the voting shares of Intercontinental Bank, Miami, Florida.

B. Federal Reserve Bank of St. Louis (Randall C. Sumner, Vice President) 411 Locust Street, St. Louis, Missouri 63166:

1. Union Planters Corporation, Memphis, Tennessee, and CBI Acquisition Company, Inc., Cape Girardeau, Missouri to acquire 100 percent of the voting shares of Capital Bancorporation, Inc., Cape Girardeau, Missouri, and thereby indirectly acquire Capital Bank of Cape Girardeau County, Cape Girardeau, Missouri; Capital Bank of Perryville, N.A., Perryville, Missouri; Capital Bank of Sikeston, Sikeston, Missouri; Capital Bank of Southwest Missouri, Ozark, Missouri; Maryland Avenue Bancorporation, Clayton, Missouri; Capital Bank & Trust Company of Clayton, Clayton, Missouri; Century State Bancshares, Jackson, Missouri; and Capital Bank of Columbia, Columbia, Missouri. Applicant also proposed to acquire Home Federal Savings and Loan Association, Jonesboro, Arkansas, which will be merged into a Union Planters bank upon consummation.

In connection with this application, CBI Acquisition Company, Inc., Cape Girardeau, Missouri, also has applied to become a bank holding company.

C. Federal Reserve Bank of Dallas (Genie D. Short, Vice President) 2200 North Pearl Street, Dallas, Texas 75201-2272:

1. Caldwell Holding Company, Columbia, Louisiana; to acquire 7.93 percent of the voting shares of Citizens Progressive Bank, Columbia, Louisiana.

2. FSB Bancshares, Inc., Clute, Texas; to become a bank holding company by acquiring 100 percent of the voting shares of FSB Bancshares of Delaware, Inc., Wilmington, Delaware; First State Bank, Clute, Texas.

In connection with this application, FSB Bancshares of Delaware, Inc., Wilmington, Delaware, also has applied to become a bank holding company by acquiring 100 percent of the voting shares of First State Bank, Clute, Texas.

Board of Governors of the Federal Reserve System, August 23, 1995.

Jennifer J. Johnson,

Deputy Secretary of the Board.

[FR Doc. 95–21347 Filed 8–28–95; 8:45 am]

BILLING CODE 6210–01–F

Norwest Corporation; Notice to Engage in Certain Nonbanking Activities

Norwest Corporation, Minneapolis, Minnesota (Applicant), has applied pursuant to section 4(c)(8) of the Bank Holding Company Act (12 U.S.C. 1843(c)(8)) (BHC Act) and section 225.23 of the Board's Regulation Y (12 CFR 225.23), to acquire The Foothill Group, Inc., Los Angeles, California (Company), and thereby engage in asset based commercial lending and managing certain assets through Company as the corporate general partner in two limited partnerships (Partnerships). The proposed activities involve acquiring debt at a discount from its stated principal amount, including both secured and unsecured debt in the form of bank loans, privately placed as well as publicly-traded debt instruments, including bonds, notes and debentures, and discounted receivables. Applicant maintains that such discounted debt is acquired with the purpose of restructuring the debt to achieve a higher yield and greater collateral protection. Alternatively, the debt investments may include those of companies that may be contemplating, involved in, or recently have completed, a negotiated restructuring of their outstanding debt or a reorganization under Chapter 11 of the Federal Bankruptcy Code. Applicant indicates that asset based commercial lending involves making revolving credit and term loans, secured by accounts receivable, inventory, machinery, equipment, and other assets, to companies which are generally unable to secure financing from traditional lending sources. In connection with these activities, Applicant also seeks authority to engage in serving as an investment advisor pursuant to § 225.25(b)(4) of the Board's Regulation Y. The proposed activities will be conducted throughout the United States.

Closely Related to Banking Standard

Section 4(c)(8) of the BHC Act provides that a bank holding company may, with Board approval, engage in any activity ''which the Board, after due notice and opportunity for hearing, has determined (by order or regulation) to be so closely related to banking or managing or controlling banks as to be a proper incident thereto.'' In determining whether a proposed activity is closely related to banking for purposes of the BHC Act, the Board considers, *inter alia*, the matters set forth in *National Courier Association v. Board of Governors of the Federal Reserve System*, 516 F.2d 1229 (D.C. Cir. 1975). These considerations are (1) whether banks generally have in fact provided the proposed services, (2) whether banks generally provide services that are operationally or functionally so similar to the proposed services as to equip them particularly well to provide the proposed services, and (3) whether banks generally provide services that are so integrally related to

the proposed services as to require their provision in a specialized form. 516 F.2d at 1237. In addition, the Board may consider any other basis that may demonstrate that the activity has a reasonable or close relationship to banking or managing or controlling banks. *Board Statement Regarding Regulation Y*, 49 Federal Register 806 (1984).

Applicant maintains that the proposed asset based commercial lending and management of assets activities are closely related to banking. In particular, Applicant argues that the proposed activities are consistent with making and servicing loans and operating a collection agency pursuant to §§ 225.25(b)(1) and (b)(23) of the Board's Regulation Y. *See* 12 CFR 225.25(b)(1) and (b)(23). In addition, the Board previously has determined by regulation that investment advisory activities, when conducted within the limitations established by the Board in its regulations and in related interpretations and orders, are closely related to banking for purposes of section 4(c)(8) of the BHC Act. *See* 12 CFR 225.25(b)(4).

The Partnerships are engaged primarily in the making, servicing and investing in discounted bank loans and other debt securities. Applicant maintains that Partnerships acquire debt that has been or which is in the process of being restructured and which is secured by collateral that is sufficient to pay off all indebtedness in the event of foreclosure or liquidation. Applicant states that the Partnerships are exempt from registration as investment companies under the Investment Company Act of 1940 (15 U.S.C. 80a-1 *et seq.*), both partnerships have been fully subscribed, and no additional limited partners may be admitted, although additional partnerships may be formed in the future.

Applicant's proposed activities with respect to Partnerships are similar to activities previously approved by Board order, and Applicant proposes to make commitments similar to those made to the Board in previous cases. *See Meridian Bancorp, Inc.*, 80 Federal Reserve Bulletin 736 (1994). Applicant represents that the securities owned by the Partnerships, together with all other securities directly or indirectly owned or controlled by Applicant, would not include more than 5 percent of the voting shares of an issuer and not more that 25 percent of the total equity of an issuer, and such equity investment will be held in accord with section 4(c)(8) of the BHC Act and § 225.22(c)(5) of Regulation Y. Applicant has stated that the Partnerships will not knowingly acquire debt securities that are in default at the time of acquisition if the Partnerships have the immediate right at the time of such acquisition to foreclose on and acquire collateral which the Partnerships are not authorized to hold or control or which are impermissible for bank holding companies and their affiliates. If debt in default is acquired by Partnerships, Applicant has represented that Partnerships either will dispose of any interest in the collateral which secures such debt, or will restructure the indebtedness to cure any default, within the time period provided in the BHC Act for the disposition of securities or assets acquired by foreclosure or otherwise in the ordinary course of collecting a debt previously contracted in good faith.

Applicant is not seeking authority to place limited partnership interests or other securities of any subsequently formed limited partnerships for which Company acts as a general partner.

Proper Incident to Banking Standard

In order to approve the proposal, the Board must determine that the proposed activities ''can reasonably be expected to produce benefits to the public, such as greater convenience, increased competition, or gains in efficiency, that outweigh possible adverse effects, such as undue concentration of resources, decreased or unfair competition, conflicts of interest, or unsound banking practices.'' 12 U.S.C. 1843(c)(8).

Applicant believes that the proposed activities would produce public benefits that outweigh any potential adverse effects. These public benefits include increased economies of scale and greater efficiencies for Applicant's lending operations, which Applicant believes will benefit the public by promoting competition and lowering costs. In addition, Applicant indicates that the proposed activities would not result in adverse effects such as an undue concentration of resources, decreased or unfair competition, conflicts of interests, or unsound banking practices.

In publishing the proposal for comment, the Board does not take a position on issues raised by the proposal. Notice of the proposal is published solely to seek the views of interested persons on the issues presented by the application and does not represent a determination by the Board that the proposal meets, or is likely to meet, the standards of the BHC Act.

Any comments or requests for hearing should be submitted in writing and received by William W. Wiles, Secretary, Board of Governors of the Federal Reserve System, Washington, D.C. 20551, not later than September 20, 1995. Any request for a hearing on this application must, as required by § 262.3(e) of the Board's Rules of Procedure (12 CFR 262.3(e)), be accompanied by a statement of the reasons why a written presentation would not suffice in lieu of a hearing, identifying specifically any questions of fact that are in dispute, summarizing the evidence that would be presented at a hearing, and indicating how the party commenting would be aggrieved by approval of the proposal.

The notice may be inspected at the offices of the Board of Governors or the Federal Reserve Bank of Minneapolis.

Board of Governors of the Federal Reserve System, August 23, 1995.

Jennifer J. Johnson,

Deputy Secretary of the Board.

[FR Doc. 95–21348 Filed 8–28–95; 8:45 am]

BILLING CODE 6210–01–F

SunTrust Banks, Inc. ; Acquisition of Company Engaged in Nonbanking Activities

The organization listed in this notice has applied under § 225.23(a) or (f) of the Board's Regulation Y (12 CFR 225.23(a) or (f)) for the Board's approval under section 4(c)(8) of the Bank Holding Company Act (12 U.S.C. 1843(c)(8)) and § 225.21(a) of Regulation Y (12 CFR 225.21(a)) to acquire or control voting securities or assets of a company engaged in a nonbanking activity. Unless otherwise noted, such activities will be conducted throughout the United States.

The application is available for immediate inspection at the Federal Reserve Bank indicated. Once the application has been accepted for processing, it will also be available for inspection at the offices of the Board of Governors. Interested persons may express their views in writing on the question whether consummation of the proposal can ''reasonably be expected to produce benefits to the public, such as greater convenience, increased competition, or gains in efficiency, that outweigh possible adverse effects, such as undue concentration of resources, decreased or unfair competition, conflicts of interests, or unsound banking practices.'' Any request for a hearing on this question must be accompanied by a statement of the reasons a written presentation would not suffice in lieu of a hearing, identifying specifically any questions of fact that are in dispute, summarizing the evidence that would be presented at a hearing, and indicating how the party

commenting would be aggrieved by approval of the proposal.

Comments regarding the application must be received at the Reserve Bank indicated or the offices of the Board of Governors not later than September 12, 1995.

A. Federal Reserve Bank of Atlanta (Zane R. Kelley, Vice President) 104 Marietta Street, N.W., Atlanta, Georgia 30303:

1. SunTrust Banks, Inc., Atlanta, Georgia; to engage *de novo* through SunTrust Capital Markets, Inc., Atlanta, Georgia, in leasing activities, pursuant to § 225.25(b)(5) of the Board's Regulation Y; acting as broker or agent with respect to interest rate and currency swap transactions and certain risk management products such as caps, floors, and collars, as well as options on caps, floors, and collars, and to act as advisor to corporate and institutional customers regarding financial strategies involving interest rate and currency swaps and swap derivative products, pursuant to Board order *Saban, S.A., RNYC Holdings Limited*, and *Republic New York Corporation*, 80 Federal Reserve Bulletin 249 (1994); *The Sanwa Bank Limited*, 77 Federal Reserve Bulletin 64 (1991); *C&S/Sovran Corporation*, 76 Federal Reserve Bulletin 857 (1990); and *The Sumitomo Bank, Limited*, 75 Federal Reserve Bulletin 582 (1989); and *The Fuji Bank Limited*, 76 Federal Reserve Bulletin 768 (1990); underwriting and dealing in certain unrated municipal revenue bonds, pursuant to Board order *Letter Interpreting Section 20 Orders*, 80 Federal Reserve Bulletin 198 (1994).

Board of Governors of the Federal Reserve System, August 23, 1995.

Jennifer J. Johnson,

Deputy Secretary of the Board.

[FR Doc. 95–21349 Filed 8–28–95; 8:45 am]

BILLING CODE 6210–01–F

SunTrust Banks, Inc.; Notice of Application to Engage de novo in Permissible Nonbanking Activities

The company listed in this notice has filed an application under § 225.23(a)(1) of the Board's Regulation Y (12 CFR 225.23(a)(1)) for the Board's approval under section 4(c)(8) of the Bank Holding Company Act (12 U.S.C. 1843(c)(8)) and § 225.21(a) of Regulation Y (12 CFR 225.21(a)) to commence or to engage *de novo*, either directly or through a subsidiary, in a nonbanking activity that is listed in § 225.25 of Regulation Y as closely related to banking and permissible for bank holding companies. Unless otherwise noted, such activities will be conducted throughout the United States.

The application is available for immediate inspection at the Federal Reserve Bank indicated. Once the application has been accepted for processing, it will also be available for inspection at the offices of the Board of Governors. Interested persons may express their views in writing on the question whether consummation of the proposal can ''reasonably be expected to produce benefits to the public, such as greater convenience, increased competition, or gains in efficiency, that outweigh possible adverse effects, such as undue concentration of resources, decreased or unfair competition, conflicts of interests, or unsound banking practices.'' Any request for a hearing on this question must be accompanied by a statement of the reasons a written presentation would not suffice in lieu of a hearing, identifying specifically any questions of fact that are in dispute, summarizing the evidence that would be presented at a hearing, and indicating how the party commenting would be aggrieved by approval of the proposal.

Comments regarding the application must be received at the Reserve Bank indicated or the offices of the Board of Governors not later than September 12, 1995.

A. Federal Reserve Bank of Atlanta (Zane R. Kelley, Vice President) 104 Marietta Street, N.W., Atlanta, Georgia 30303:

1. SunTrust Banks, Inc., Atlanta, Georgia, and Trust Company of Georgia, Atlanta, Georgia; to engage *de novo* through its subsidiary Personal Express Loans, Inc., Atlanta, Georgia, in credit-related insurance activities, pursuant to § 225.25(b)(8)(ii) of the Board's Regulation Y.

Board of Governors of the Federal Reserve System, August 23, 1995.

Jennifer J. Johnson,

Deputy Secretary of the Board.

[FR Doc. 95–21350 Filed 8–28–95; 8:45 am]

BILLING CODE 6210–01–F

DEPARTMENT OF HEALTH AND HUMAN SERVICES

Administration for Children and Families

Agency Information Collection Under OMB Review

Title: Statistical Report on Recipients Under Public Assistance.

OMB No.: 0970–0008.

Description: The information collected by Form ACF–3637 is needed to properly administer and monitor the AFDC program by providing information on a quarterly basis on recipients and families in the AFDC and Adult Programs. This date is used by Congress, Federal agencies, and others.

Respondents: State governments.

Title	Number of respondents	Number of responses per respondent	Average burden per response	Burden
ACF–3637	54	4	35	7,560

Estimated Total Annual Burden Hours: 7,560.

Additional Information: Copies of the proposed collection may be obtained by writing to The Administration for Children and Families, Office of Information Systems, 370 L'Enfant Promenade, S.W., Washington, D.C. 20447, Attn: ACF Reports Clearance Officer.

OMB Comment: Consideration will be given to comments and suggestions received within 30 days of publication. Written comments and recommendations for the proposed information collection should be sent directly to the following: Office of Management and Budget, Paperwork Reduction Project, 725 17th Street NW., Washington, DC 20503, Attn: Ms. Wendy Taylor.

Dated: August 22, 1995.

Bob Sargis,

Acting Reports Clearance Officer.

[FR Doc. 95–21386 Filed 8–28–95; 8:45 am]

BILLING CODE 4184–01–M

Agency for Toxic Substances and Disease Registry

Workshop on the Psychological Effects of Hazardous Substances: Meeting

The Agency for Toxic Substances and Disease Registry (ATSDR) announces the following meeting.

Name: Workshop on the Psychological Effects of Hazardous Substances.

Times and Dates: 7:30 a.m.–8:30 a.m., Registration; 8:30 a.m.–6:30 p.m., September 12, 1995; 8:30 a.m.–4 p.m., September 13, 1995.

Place: Gwinnett Civic and Cultural Center, 6400 Sugarloaf Parkway, Duluth, Georgia 30155, telephone 404/623–4966, FAX 404/623–4808.

Status: Open to the public, limited only by the space available. The meeting room accommodates approximately 250 people. Advanced registration is encouraged. Please call the contact person listed below.

Matters To Be Considered and Purpose: Participants will be divided into the following three workgroups:

Workgroup 1: Neurobiology
Workgroup 2: Psychosocial Effects
Workgroup 3: Clinical Public Health Interventions

Invited experts will provide ATSDR with individual input and opinion regarding available information on the psychological effects of exposure to hazardous substances.

ATSDR will (1) compile a summary of this information in a monograph and (2) use the findings from this workshop to develop public health interventions.

Contact Person for More Information: Linda Champaign, Visions USA, Healey Building, 57 Forsyth Street, NW., Suite 1000, Atlanta, Georgia 30303, telephone 404/880–0006, extension 227.

Dated: August 23, 1995.

Carolyn J. Russell,

Director, Management Analysis and Services Office, Centers for Disease Control and Prevention (CDC).

[FR Doc. 95–21373 Filed 8–28–95; 8:45 am]

BILLING CODE 4163–70–M

Centers for Disease Control and Prevention

[Announcement 605]

Grants for Injury Control Research Centers Notice of Availability Of Funds for Fiscal Year 1996

Introduction

The Centers for Disease Control and Prevention (CDC) announces that grant applications are being accepted for Injury Control Research Centers (ICRC's). The Public Health Service (PHS) is committed to achieving the health promotion and disease prevention objectives of ''Healthy People 2000,'' a PHS-led national activity to reduce morbidity and mortality and improve the quality of life. This announcement is related to the priority areas of Violent and Abusive Behavior and Unintentional Injuries. For ordering a copy of ''Healthy People 2000,'' see the Section **WHERE TO OBTAIN ADDITIONAL INFORMATION.**

Authority

This program is authorized under Sections 301 and 391–394A of the Public Health Service Act (42 U.S.C. 241 and 280b-280b-3). Program regulations are set forth in 42 CFR, Part 52.

Smoke-Free Workplace

PHS strongly encourages all grant recipients to provide a smoke- free workplace and to promote the nonuse of all tobacco products, and Public Law 103–227, the Pro-children Act of 1994, prohibits smoking in certain facilities that receive Federal funds in which education, library, day care, health care, and early childhood development services are provided to children.

Eligible Applicants

Eligible applicants include all nonprofit and for-profit organizations. Thus, universities, colleges, research institutions, hospitals, other public and private organizations, State and local health departments, and small, minority and/or women-owned businesses are eligible for these grants. Applicants from non-academic institutions should provide evidence of a collaborative relationship with an academic institution. Current recipients of CDC injury control research center grants and injury control research program project grants are eligible to apply for continued support.

Availability of Funds

Approximately $2,250,000 is expected to be available in fiscal year (FY) 1996 to fund approximately three new or re-competing center awards. Should additional funds become available, priority will be given to funding currently approved/unfunded work at existing ICRCs. New awards can be made for a project period not to exceed three years, and re-competing continuation awards can be made for a project period not to exceed five years. The amount of funding available may vary and is subject to change. Beginning award dates for each submission are shown in the ''Receipt and Review Schedule'' section of this announcement. Continuation awards within the project period will be made on the basis of satisfactory progress and the availability of funds.

New center grant awards will not exceed $500,000 per year (*total of direct* and *indirect costs*) with a project period not to exceed three years. Depending on availability of funds, re-competing center awards may range from $750,000 to $1,500,000 per year (*total of direct* and *indirect costs*) with a project period not to exceed five years. The range of support provided is dependent upon the degree of comprehensiveness of the center in addressing the *phases of injury control (i.e., Prevention, Acute Care, and Rehabilitation)* as determined by the Injury Research Grants Review Committee (IRGRC).

Incremental levels within this range for successfully re-competing ICRC's will be determined as follows:

Base funding (included in figures below) Up to $750,000
One phase ICRC (addresses one of the three phases of injury control) Up to $1,000,000
Two phase ICRC (addresses two of the three phases of injury control) Up to $1,250,000
Comprehensive ICRC (addresses all three phases of injury control) Up to $1,500,000

Subject to program needs and the availability of funds, supplemental awards to expand/enhance existing projects, to add a new phase(s) to an existing ICRC grant, or to add biomechanics project(s) that support phases may be made for up to $250,000 per year.

Purpose

The purposes of this program are:

A. To support injury prevention and control research on priority issues as delineated in: *Healthy People 2000; Injury Control in the 1990's: A National Plan for Action; Injury in America; Injury Prevention: Meeting the Challenge;* and *Cost of Injury: A Report to the Congress.* Information on these reports may be obtained from the individuals listed in the section **WHERE TO OBTAIN ADDITIONAL INFORMATION;**

B. To support ICRC's which represent CDC's largest national extramural investment in injury control research and training, intervention development, and evaluation;

C. To integrate collectively, in the context of a national program, the disciplines of engineering, epidemiology, medicine, biostatistics, public health, law and criminal justice, and behavioral and social sciences in order to prevent and control injuries more effectively;

D. To identify and evaluate current and new interventions for the prevention and control of injuries;

E. To bring the knowledge and expertise of ICRC's to bear on the development and improvement of effective public and private sector programs for injury prevention and control; and

F. To facilitate injury control efforts supported by various governmental agencies within a geographic region.

Award Considerations

A. Applicants must demonstrate and apply expertise in at least one of the three phases of injury control (prevention, acute care, or rehabilitation) as a core component of the center. The second and/or third phases do not have to be supported by core funding but may be achieved through collaborative arrangements. Comprehensive ICRC's must have all three phases supported by core funding.

B. Applicants must document ongoing injury-related research projects or control activities currently supported by other sources of funding.

C. Applicants must provide a director (Principal Investigator) who has specific authority and responsibility to carry out the project. The director must report to an appropriate institutional official, e.g., dean of a school, vice president of a university, or commissioner of health. The director must have no less than 30 percent effort devoted solely to this project with an anticipated range of 30 to 50 percent.

D. Applicants must demonstrate experience in successfully conducting, evaluating, and publishing injury research and/or designing, implementing, and evaluating injury control programs.

E. Applicants must provide evidence of working relationships with outside agencies and other entities which will allow for implementation of any proposed intervention activities.

F. Applicants must provide evidence of involvement of specialists or experts in medicine, engineering, epidemiology, law and criminal justice, behavioral and social sciences, biostatistics, and/or public health as needed to complete the plans of the center. These are considered the disciplines and fields for ICRC's. An ICRC is encouraged to involve biomechanicists in its research. This, again, may be achieved through collaborative relationships as it is no longer a requirement that all ICRC's have biomechanical engineering expertise.

G. Applicants must have an established curricula and graduate training programs in disciplines relevant to injury control (e.g., epidemiology, biomechanics, safety engineering, traffic safety, behavioral sciences, or economics).

H. Applicants must demonstrate the ability to disseminate injury control research findings, translate them into interventions, and evaluate their effectiveness.

I. Applicants must have an established relationship, demonstrated by letters of agreement, with injury prevention and control programs or injury surveillance programs being carried out in the State or region in which the ICRC is located. Cooperation with private-sector programs is encouraged.

Applicants should have an established or documented planned relationship with organizations or individual leaders in communities where injuries occur at high rates, e.g., minority health communities.

Grant funds will not be made available to support the provision of direct care. Studies may be supported which evaluate methods of care and rehabilitation for potential reductions in injury effects and costs. Studies can be supported which identify the effect on injury outcomes and cost of systems for pre-hospital, hospital, and rehabilitative care and independent living. Eligible applicants may enter into contracts, including consortia agreements (as set forth in the PHS Grants Policy Statement, dated April 1, 1994), as necessary to meet the requirements of the program and strengthen the overall application.

Evaluation Criteria

Upon receipt, applications will be reviewed by CDC staff for completeness and responsiveness as outlined under the previous heading **AWARD CONSIDERATIONS.** (A listing of where these requirements are described and/or documented in the application will facilitate the review process.) Incomplete applications and applications that are not responsive will be returned to the applicant without further consideration.

Applications which are complete and responsive may be subjected to a preliminary evaluation by reviewers from the IGRC to determine if the application is of sufficient technical and scientific merit to warrant further review; the CDC will withdraw from further consideration applications judged to be noncompetitive and promptly notify the principal investigator/program director and the official signing for the applicant organization.

Those applications judged to be competitive will be further evaluated by a dual review process. The primary review will be a peer evaluation (IRGRC) of the scientific and technical merit of the application. The final review will be conducted by the CDC Advisory Committee for Injury Prevention and Control (ACIPC), which will consider the results of the peer review together with program need and relevance. Funding decisions will be made by the Director, National Center for Injury Prevention and Control (NCIPC), based on merit and priority score ranking by the IRGRC, program review by the ACIPC, and the availability of funds.

A. Review by the Injury Research Grants Review Committee (IRGRC)

Peer review of ICRC grant applications will be conducted by the IRGRC, which may recommend the application for further consideration or not for further consideration. Site visits will be a part of this process for recompeting ICRC's. Reverse site visits may be a part of this process for new applicants.

Factors to be considered by IRGRC include:

1. The specific aims of the application, e.g., the long- term objectives and intended accomplishments.

2. The scientific and technical merit of the overall application, including the significance and originality (e.g., new topic, new method, new approach in a new population, or advancing understanding of the problem) of the proposed research.

3. The extent to which the evaluation plan will allow for the measurement of progress toward the achievement of stated objectives.

4. Qualifications, adequacy, and appropriateness of personnel to accomplish the proposed activities.

5. The soundness of the proposed budget in terms of adequacy of resources and their allocation.

6. The appropriateness (e.g., responsiveness, quality, and quantity) of consultation, technical assistance, and training in identifying, implementing, and/or evaluating intervention/control measures that will be provided to public and private agencies and institutions, with emphasis on State and local health departments, as evidenced by letters detailing the nature and extent of this commitment and collaboration. Specific letters of support or understanding from appropriate governmental bodies must be provided.

7. Evidence of other public and private financial support.

8. Progress made as detailed in the application if the applicant is submitting a competitive renewal

application. Documented success examples include: development of pilot projects; completion of high quality research projects; publication of findings in peer reviewed scientific and technical journals; number of professionals trained; provision of consultation and technical assistance; integration of disciplines; translation of research into implementation; impact on injury control outcomes including legislation/regulation, treatment, and behavior modification interventions.

B. Review by CDC Advisory Committee for Injury Prevention and Control (ACIPC)

Factors to be considered by ACIPC include:

1. The results of the peer review.
2. The significance of the proposed activities as they relate to national program priorities and the achievement of national objectives.
3. National and programmatic needs and geographic balance.
4. Overall distribution of the thematic focus of competing applications; the nationally comprehensive balance of the program in addressing: The three phases of injury control (prevention, acute care, and rehabilitation); the control of injury among populations who are at increased risk, including minority groups, the elderly and children; the major causes of intentional and unintentional injury; and the major disciplines of injury control (such as biomechanics and epidemiology).
5. Within budgetary considerations, the ACIPC will establish annual funding levels as detailed under the heading, **AVAILABILITY OF FUNDS.**

C. Applications for Supplemental Funding

Supplemental grant awards may be made when funds are available to support research work or activities. Applications should be clearly labeled to denote their status as requesting supplemental funding support. These applications will be reviewed by the IRGRC and the ACIPC.

D. Continued Funding

Continuation awards within the project period will be made on the basis of the availability of funds and the following criteria:

1. The accomplishments of the current budget period show that the applicant's objectives as prescribed in the yearly workplans are being met;
2. The objectives for the new budget period are realistic, specific, and measurable;
3. The methods described will clearly lead to achievement of these objectives;
4. The evaluation plan allows management to monitor whether the methods are effective by having clearly defined process, impact, and outcome objectives, and the applicant demonstrates progress in implementing the evaluation plan;
5. The budget request is clearly explained, adequately justified, reasonable, and consistent with the intended use of grant funds; and
6. Progress has been made in developing cooperative and collaborative relationships with injury surveillance and control programs implemented by State and local governments and private sector organizations.

Award Priorities

Special consideration will be given to re-competing Injury Control Research Centers.

Executive Order 12372 Review

Applications are not subject to the review requirements of Executive Order 12372, entitled Inter-Governmental Review of Federal Programs.

Public Health System Reporting Requirements

This program is not subject to the Public Health System Reporting Requirement.

Catalog of Federal Domestic Assistance Number

The Catalog of Federal Domestic Assistance Number is 93.136.

Application Submission and Deadlines

A. Preapplication Letter of Intent

In order to schedule and conduct site visits as part of the formal review process, potential applicants are encouraged to submit a nonbinding letter of intent to apply to the Grants Management Specialist (whose address is given in this section Item B). It should be postmarked no later than one month prior to the submission deadline (September 30, 1995, for October 30, 1995, submission deadline). The letter should identify the relevant announcement number for the response, indicate the submission deadline which will be met, name the principal investigator, and specify the injury control theme or emphasis of the proposed center (e.g., acute care, biomechanics, epidemiology, prevention, intentional injury, or rehabilitation). The letter of intent does not influence review or funding decisions, but it will enable CDC to plan the review more efficiently.

B. Applications

Applicants should use Form PHS–398 (OMB Number 0925–0001) and adhere to the ERRATA Instruction Sheet for PHS–398 contained in the Grant Application Kit. The narrative section for *each* project within an ICRC should not exceed 25 typewritten pages. Refer to section 4, page 10, of PHS–398 instructions for font type and size. *Applications not adhering to these specifications may be returned to applicant.* Applicants should submit an original and five copies to Maggie Slay, Grants Management Specialist, Grants Management Branch, Procurement and Grants Office, Centers for Disease Control and Prevention (CDC), 255 East Paces Ferry Road, NE., Room 300, MS E–13, Atlanta, GA 30305.

C. Deadlines

Applications shall be considered as meeting the deadline above if they are either:

1. Received on or before the deadline date; or
2. Sent on or before the deadline date and received in time for submission to the peer review committee. Applicants should request a legibly dated U.S. Postal Service postmark or obtain a legibly dated receipt from a commercial carrier or the U.S. Postal Service. Private metered postmarks shall not be acceptable as proof of timely mailing.

Applications which do not meet the criteria in C.1. or C.2. above are considered late applications and will be returned to the applicant. Supplemental materials received later than thirty days after the application receipt date are considered late and will be returned to the applicant.

D. Receipt and Review Schedule

This is a continuous announcement. Consequently, these receipt dates will be ongoing until further notice. The proposed timetables for receiving applications and awarding grants are as follows:

Receipt of new/revised/supplementary/competitive renewal applications	Initial review	Secondary review	Earliest award date
October 30, 1995.	January .	March	September 1, 1996.

Future receipt dates are as follows:

Receipt of new/revised/supplementary/competitive renewal applications	Initial review	Secondary review	Earliest award date
October .	January .	March	September.

Where to Obtain Additional Information

To receive additional written information call (404) 332–4561. You will be asked to leave your name, address, and phone number and will need to refer to Announcement Number 605. You will receive a complete program description, information on application procedures, and application forms.

If you have questions after reviewing the contents of all the documents, business management assistance may be obtained from Maggie Slay, Grants Management Specialist, Grants Management Branch, Centers For Disease Control and Prevention (CDC), 255 East Paces Ferry Road, NE., MS-E13, Atlanta, GA 30305, telephone (404) 842–6797. Programmatic technical assistance may be obtained from Tom Voglesonger, Program Manager, Injury Control Research Centers, National Center for Injury Prevention and Control, Centers for Disease Control and Prevention (CDC), 4770 Buford Highway, MS-K58, Atlanta, GA 30341–3724, telephone (404) 488–4265.

Please refer to Announcement 605 when requesting information and submitting an application.

Potential applicants may obtain a copy of ''Healthy People 2000'' (Full Report; Stock No. 017–001–00474–0) or ''Healthy People 2000'' (Summary Report; Stock No. 017–001–00473–1), referenced in the Introducton, through the Superintendent of Documents, Government Printing Office, Washington, DC 20402–9325, telephone (202) 512–1800.

Dated: August 23, 1995.

Joseph R. Carter,

Acting Associate Director for Management and Operations, Centers for Disease Control and Prevention (CDC).

[FR Doc. 95–21376 Filed 8–28–95; 8:45 am]

BILLING CODE 4163–18–P

Technical Advisory Committee for Diabetes Translation and Community Control Programs; Meeting

In accordance with section 10(a)(2) of the Federal Advisory Committee Act (Pub. L. 92–463), the Centers for Disease Control and Prevention (CDC) announces the following committee meeting.

Name: Technical Advisory Committee for Diabetes Translation and Community Control Programs.

Time and Date: 8 a.m.–4 p.m., September 19, 1995.

Place: Sheraton Gateway Hotel, Atlanta Airport, 1900 Sullivan Road, College Park, Georgia 30337, telephone 404/997-1100.

Status: Open to the public, limited only by the space available.

Purpose: This committee is charged with advising the Director, CDC, regarding priorities and feasible goals for translation activities and community control programs designed to reduce risk factors, morbidity, and mortality from diabetes and its complications. The Committee advises regarding policies, strategies, goals and objectives, and priorities; identifies research advances and technologies ready for translation into widespread community practice; recommends public health strategies to be implemented through community interventions; advises on operational research and outcome evaluation methodologies; identifies research issues for further clinical investigation; and advises regarding the coordination of programs with Federal, voluntary, and private resources involved in the provision of services to people with diabetes.

Matters To Be Discussed: Committee members will discuss the status of the National Diabetes Education Program; CDC's role in the National Institutes of Health Diabetes Prevention Program II, a collaborative program on diabetes with Russia; priorities of CDC's Division of Diabetes Translation State Diabetes Control Programs; future priorities and projects of the Division; and goals and activities of the Technical Advisory Committee for Diabetes Translation and Community Control Programs.

Agenda items are subject to change as priorities dictate.

Contact Person for More Information: Cheryl Shaw, Program Specialist, Division of Diabetes Translation, National Center for Chronic Disease Prevention and Health Promotion, CDC, 4770 Buford Highway NE., M/S K–10, Atlanta, Georgia 30341–3724, telephone 770/488–5004.

Dated: August 23, 1995.

Carolyn J. Russell,

Director, Management Analysis and Services Office, Centers for Disease Control and Prevention (CDC).

[FR Doc. 95–21372 Filed 8–28–95; 8:45 am]

BILLING CODE 4163–18–M

Food and Drug Administration

[Docket No. 95N–0275]

Drug Export; Atenolol Bulk Drug Substance

AGENCY: Food and Drug Administration, HHS.

ACTION: Notice.

SUMMARY: The Food and Drug Administration (FDA) is announcing that IPR Pharmaceuticals, Inc., a part of Zeneca Group PLC, has filed an application requesting approval for the export of the bulk drug substance Atenolol to France to produce various approved finished formulations containing Atenolol alone or in combination.

ADDRESSES: Relevant information on this application may be directed to the Dockets Management Branch (HFA–305), Food and Drug Administration, rm. 1–23, 12420 Parklawn Dr., Rockville, MD 20857, and to the contact person identified below. Any future inquiries concerning the export of human drugs under the Drug Export Amendments Act of 1986 should also be directed to the contact person.

FOR FURTHER INFORMATION CONTACT: James E. Hamilton, Center for Drug Evaluation and Research (HFD–310), Food and Drug Administration, 7520 Standish Pl., Rockville, MD 20855, 301–594–3150.

SUPPLEMENTARY INFORMATION: The drug export provisions in section 802 of the Federal Food, Drug, and Cosmetic Act (the act) (21 U.S.C. 382) provide that FDA may approve applications for the export of drugs that are not currently approved in the United States. Section 802(b)(3)(B) of the act sets forth the requirements that must be met in an application for approval. Section 802(b)(3)(C) of the act requires that the agency review the application within 30 days of its filing to determine whether the requirements of section 802(b)(3)(B) have been satisfied. Section 802(b)(3)(A) of the act requires that the agency publish a notice in the **Federal Register** within 10 days of the filing of an application for export to facilitate public participation in its review of the application. To meet this requirement, the agency is providing notice that IPR Pharmaceuticals, Inc., a part of Zeneca Group PLC, P.O. Box 1967, Carolina, PR 00984, has filed an application requesting approval for the export of the bulk drug substance Atenolol to France. Atenolol is a synthetic, beta-selective adrenoreceptor blocking agent used alone or in combination with other antihypertensive agents. The firm has several approved applications using Atenolol from an approved bulk source for various finished dosage forms. The bulk drug substance Atenolol which is the subject of this notice will be manufactured in a new facility. The application was received and filed in the Center for Drug Evaluation and

Research on July 20, 1995, which shall be considered the filing date for purposes of the act.

Interested persons may submit relevant information on the application to the Dockets Management Branch (address above) in two copies (except that individuals may submit single copies) and identified with the docket number found in brackets in the heading of this document. These submissions may be seen in the Dockets Management Branch between 9 a.m. and 4 p.m., Monday through Friday.

The agency encourages any person who submits relevant information on the application to do so by September 8, 1995, and to provide an additional copy of the submission directly to the contact person identified above, to facilitate consideration of the information during the 30-day review period.

This notice is issued under the Federal Food, Drug, and Cosmetic Act (sec. 802 (21 U.S.C. 382)) and under authority delegated to the Commissioner of Food and Drugs (21 CFR 5.10) and redelegated to the Center for Drug Evaluation and Research (21 CFR 5.44).

Dated: August 14, 1995.

Stephanie R. Gray,

Director, Office of Compliance, Center for Drug Evaluation and Research.

[FR Doc. 95–21379 Filed 8–28–95; 8:45 am]

BILLING CODE 4160–01–F

DEPARTMENT OF THE INTERIOR

Bureau of Land Management

Prepare an Environmental Impact Statement/Environmental Impact Report (EIS/EIR) Analyzing the Impacts of a Proposed Expansion of the Castle Mountain Mine, San Bernardino County, California

AGENCY: Bureau of Land Management, Interior.

ACTION: Amendment to the Notice of Intent to Prepare the Castle Mountain Mine EIS/EIR.

SUMMARY: Notice is hereby given that the Bureau of Land Management (BLM) is amending the Notice of Intent published in the **Federal Register** on Tuesday, July 18, 1995, (Volume 60, Number 137) regarding the preparation of an EIS/EIR for a proposed expansion of the Castle Mountain Mine in San Bernardino County, California. BLM is extending the public comment period for 30 days, and will accept comments pertaining to preparation of the draft EIS through Wednesday, September 27, 1995, due to the widespread public interest in the proposed expansion.

ADDRESSES: Written comments should be addressed to the Bureau of Land Management, Needles Resource Area, 101 West Spikes Road, Needles, California 92363.

FOR FURTHER INFORMATION CONTACT: For additional information regarding the preparation of the EIS contact George R. Meckfessel, Planning and Environmental Coordinator at (619) 326–3896.

Dated: August 22, 1995.

Henri R. Bisson,

District Manager.

[FR Doc. 95–21252 Filed 8–28–95; 8:45 am]

BILLING CODE 4310–40–M

[NM–930–1310–01; TXNM 88192]

Proposed Reinstatement of Terminated Oil and Gas Lease; New Mexico

AGENCY: Bureau of Land Management, Interior.

ACTION: Notice.

SUMMARY: Under the provisions of Public Law 97–451, a petition for reinstatement of Oil and Gas Lease TXNM 88192, Sabine County, Texas, was timely filed and was accompanied by all required rentals and royalties accruing from March 1, 1995, the date of termination. No valid lease has been issued affecting the land. The lessee has agreed to new lease terms for rentals and royalties at rates of $10.00 per acre, or fraction thereof, and 16⅔ percent, respectively. Payment of a $500.00 administrative fee has been made. Having met all the requirements for reinstatement of the lease as set in Section 31 (d) and (e) of the Mineral Leasing Act of 1920, as amended (30 U.S.C. 188 (d) and (e)), the Bureau of Land Management is proposing to reinstate the lease effective March 1, 1995, subject to the original terms and conditions of the lease and the increased rental and royalty rates cited above, and the reimbursement for cost of publication of this Notice.

FOR FURTHER INFORMATION CONTACT: Lourdes B. Ortiz, BLM, New Mexico State Office, (505) 438–7586.

Dated: August 21, 1995.

Lourdes B. Ortiz,

Land Law Examiner.

[FR Doc. 95–21421 Filed 8–28–95; 8:45 am]

BILLING CODE 4310–FB–M

[NM–930–1310–01; TXNM 88191]

Notice of Proposed Reinstatement of Terminated Oil and Gas Lease; New Mexico

AGENCY: Bureau of Land Management, Interior.

ACTION: Notice.

SUMMARY: Under the provisions of Public Law 97–451, a petition for reinstatement of Oil and Gas Lease TXNM 88191, Sabine County, Texas, was timely filed and was accompanied by all required rentals and royalties accruing from March 1, 1995, the date of termination. No valid lease has been issued affecting the land. The lessee has agreed to new lease terms for rentals and royalties at rates of $10.00 per acre, or fraction thereof, and 16⅔ percent, respectively. Payment of a $500.00 administrative fee has been made. Having met all the requirements for reinstatement of the lease as set forth in Section 31 (d) and (e) of the Mineral Leasing Act of 1920, as amended (30 U.S.C. 188 (d) and (e)), the Bureau of Land Management is proposing to reinstate the lease effective March 1, 1995, subject to the original terms and conditions of the lease and the increased rental and royalty rates cited above, and the reimbursement for cost of publication of this Notice.

FOR FURTHER INFORMATION CONTACT: Lourdes B. Ortiz, BLM, New Mexico State Office, (505) 438–7586.

Dated: August 21, 1995.

Lourdes B. Ortiz,

Land Law Examiner.

[FR Doc. 95–21420 Filed 8–28–95; 8:45 am]

BILLING CODE 4310–FB–M

[AZ–055–05–1820–01; AA–25117]

Arizona: Notice of Realty Action; Lease of Public Lands for Airport Purposes in La Paz County, Arizona

AGENCY: Bureau of Land Management, Interior.

ACTION: Notification of public lands for airport purposes lease.

SUMMARY: The following described public lands in La Pa County, Arizona, have been examined and found suitable for lease under the provisions of the Act of May 24, 1928 (49 U.S.C. Appendix 211–213). The Town of Quartzsite proposes to use the land for a Community Airport.

Gila and Salt River Meridian, Arizona

T. 4N., R. 18 W.,
Sec. 19, All lands lying south of Interstate Highway 10;

Sec. 30, All;
Sec. 31, All.

The area described contains approximately 1,380 acres.

SUPPLEMENTARY INFORMATION: The land is not required for any Federal purposes. The lease is consistent with current Bureau planning for this area and would be in the public interest. The lease when issued would be subject to the following terms, conditions, and reservations:

1. Provisions of the Airport Act of May 24, 1928, and to all applicable regulations of the Secretary of the Interior.
2. A 15-foot wide right-of-way (AA–22287) for a buried communication cable.
3. A road right-of-way (PHX–086772) for a county road.
4. A 50-foot wide right-of-way (AA–21968) for a natural gas pipeline.

DATES: Upon publication of this notice in the **Federal Register** the above described lands will be segregated from all forms of appropriation under the public land laws, including the general mining laws, except for lease under the Airport Act of May 24, 1928. The segregative effect will end upon issuance of the lease or 1 year from the date of this publication, whichever occurs first.

For a period of 45 days from the date of publication of this notice in the **Federal Register** interested parties may submit comments regarding the proposed lease of the lands to the District Manager, Yuma District Office, 3150 Winsor Avenue, Yuma, Arizona 85365.

In the absence of any objections, the decision to approve this realty action will become the final determination of the Department of the Interior.

FOR FURTHER INFORMATION CONTACT: Realty Specialist Pete Gonzales, Yuma Resource Area, 3150 Winsor Avenue, Yuma, Arizona 85365, telephone (520) 726–6300.

Dated: August 14, 1995.

Judith I. Reed,

District Manager.

[FR Doc. 95–21368 Filed 8–28–95; 8:45 am]

BILLING CODE 4310–32–M

Fish and Wildlife Service

Notice of Availability of a Technical/Agency Draft Recovery Plan for the Yellow-Shouldered Blackbird for Review and Comment

AGENCY: Fish and Wildlife Service, Interior.

ACTION: Notice of document availability.

SUMMARY: The U.S. Fish and Wildlife Service announces availability for public review of a technical/agency draft revised recovery plan for the yellow-shouldered blackbird (*Agelaius xanthomus*). At present, the species is restricted to a few localities in southwestern, southern and eastern Puerto Rico, and to Mona and Monito Islands. Nesting yellow-shouldered blackbirds use a variety of habitats: mud flats and salinas, mangrove forests and cays, coastal upland dry forest, palm trees, suburban areas, artificial structures and coastal cliffs. The species is threatened by shiny-cowbird parasitism, habitat destruction and modification, nest predation, parasitism and diseases. The Service solicits review and comments from the public on this draft plan.

DATES: Comments on the draft recovery plan must be received on or before October 30, 1995, to receive consideration by the Service.

ADDRESSES: Persons wishing to review the draft recovery plan may obtain a copy by contacting Ms. Marelisa Rivera, Caribbean Field Office, P.O. Box 491, Boquerón, Puerto Rico 00622. Comments and materials received are available on request for public inspection, by appointment, during normal business hours at the above address.

FOR FURTHER INFORMATION CONTACT: Ms. Marelisa Rivera, Caribbean Field Office, P.O. Box 491, Boquerón, P.R. 00622, Tel. 809–851–7297.

SUPPLEMENTARY INFORMATION:

Background

Restoring an endangered or threatened animal or plant to the point where it is again a secure, self-sustaining member of its ecosystem is a primary goal of the U.S. Fish and Wildlife Service's endangered species program. To help guide the recovery effort, the Service is working to prepare recovery plans for most of the listed species native to the United States. Recovery plans describe actions considered necessary for conservation of the species, establish them, and estimate time and cost for implementing the recovery measures needed.

The Endangered Species Act of 1973 (Act), as amended (16 U.S.C. 1531 *et seq.*) requires the development of recovery plans for listed species unless such a plan would not promote the conservation of a particular species. Section 4(f) of the Act, as amended in 1988, requires that public notice and an opportunity for public review and comment be provided during recovery plan development. The Service and other Federal agencies will also take these comments into account in the course of implementing approved recovery plans.

This Technical/Agency Draft is for the yellow-shouldered blackbird, which is endemic to the island of Puerto Rico. This species is endemic to Puerto Rico and Mona Island. In the past, this species was considered abundant and widespread in Puerto Rico. At present, the species is restricted to a few localities in southwestern, southern and eastern Puerto Rico, and to Mona and Monito Islands. A maximum of 500 individuals have been reported from southwestern Puerto Rico. Approximately 400 individuals are known from Mona Island, 20 individuals have been sighted in Salinas, and one individual was sighted in Roosevelt Roads Naval Station. Nesting yellow-shouldered blackbirds use a variety of habitats: mud flats and salinas, mangrove forests and cays, coastal upland dry forest, palm trees, suburban areas, artificial structures and coastal cliffs. The species is threatened by shiny-cowbird parasitism, habitat destruction and modification, nest predation, parasitism and diseases.

Public Comments Solicited

The Service solicits written comments on the recovery plan described. All comments received by the date specified above will be considered prior to approval of the plan.

Authority: The authority for this action is Section 4(f) of the Endangered Species Act, 16 U.S.C. 1533(f).

Dated: August 18, 1995.

Susan Silander,

Acting Field Supervisor.

[FR Doc. 95–21422 Filed 8–28–95; 8:45 am]

BILLING CODE 4310–55–M

National Park Service

National Register of Historic Places; Notification of Pending Nominations

Nominations for the following properties being considered for listing in the National Register were received by the National Park Service before August 19, 1995. Pursuant to section 60.13 of 36 CFR Part 60 written comments concerning the significance of these properties under the National Register criteria for evaluation may be forwarded to the National Register, National Park Service, P.O. Box 37127, Washington, D.C. 20013–7127. Written

comments should be submitted by September 13, 1995.

Antoinette J. Lee,

Acting Keeper of the National Register.

Arkansas

Union County
Willett House,
6563 Mount Holly Rd.,
Lisbon, 95001103

Indiana

Allen County
Dutch Ridge Historic District,
17915 and 17819 Old Auburn Rd. and adjacent cemetery,
Huntertown vicinity, 95001110

St. Louis, Besancon, Historic District,
15529—15535 E. Lincoln Hmy.,
New Haven vicinity, 95001112

Cass County
Pipe Creek Falls Resort,
Jct. of Co. Rds. 850 E and 275 S at Pipe Cr.,
Walton vicinity, 95001105

Daviess County
Scudder, Dr. John A., House,
612 E. Main St.,
Washington, 95001104

Decatur County
Greensburg Downtown Historic District,
Roughly, area surrounding the courthouse square,
Greensburg, 95001113

Lagrange County
Howe, John Badlam, Mansion,
W. Union St.,
Howe, 95001106

Star Milling and Electric Company Historic District,
Jct. of Co. Rds. 0505 W and 700 N,
Howe vicinity, 95001107

Miami County
Shirk—Edwards House,
50 N. Hood St.,
Peru, 95001109

Monroe County
Second Baptist Church,
321 N. Rogers St.,
Bloomington, 95001108

Posey County
Thomas, Amon Clarence, House,
503 West St.,
New Harmony, 95001111

Missouri

St. Louis County
Charbonier Bluff,
Charbonier Rd.,
Hazelwood vicinity, 95001100

New Jersey

Hunterdon County
Clinton Historic District,
Roughly, along Center, W. Main, Main, E. Main, Halstead, Water, Leigh (Library) and Lower Center Sts.,
Clinton, 95001101

Oregon

Lane County
Brattain—Hadley House,
1260 Main St.,
Springfield, 95001099

Linn County
Z.C.B.J. Tolstoj Lodge No. 224,
37091 Richardson Gap Rd.,
Scio vicinity, 95001098

Tennessee

Rutherford County
Rockvale Store,
8964 Rockvale Rd.,
Rockvale, 95001114

Vermont

Chittenden County
Fort Ethan Allen Historic District,
Jct. of VT 15 and Barnes Rd.,
Colchester, 95001102

[FR Doc. 95–21341 Filed 8–28–95; 8:45 am]

BILLING CODE 4310–70–P

DEPARTMENT OF JUSTICE

Information Collections Under Review

The Office of Management and Budget (OMB) has been sent the following collection(s) of information proposals for review under the provisions of the Paperwork Reduction Act (44 USC Chapter 35) and the Paperwork Reduction Reauthorization Act since the last list was published. Entries are grouped into submission categories, with each entry containing the following information:

(1) the title of the form/collection;

(2) the agency form number, if any, and the applicable component of the Department sponsoring the collection;

(3) who will be asked or required to respond, as well as a brief abstract;

(4) an estimate of the total number of respondents and the amount of time estimated for an average respondent to respond;

(5) an estimate of the total public burden (in hours) associated with the collection; and,

(6) an indication as to whether Section 3504(h) of Public Law 96–511 applies.

Comments and/or suggestions regarding the item(s) contained in this notice, especially regarding the estimated public burden and associated response time, should be directed to the OMB reviewer, Mr. Jeff Hill, on (202) 395–7340 *AND* to the Department of Justice's Clearance Officer, Mr. Robert B. Briggs, on (202) 514–4319. If you anticipate commenting on a form/collection, but find that time to prepare such comments will prevent you from prompt submission, you should notify the OMB reviewer *AND* the Department of Justice Clearance Officer of your intent as soon as possible. Written comments regarding the burden estimate or any other aspect of the collection may be submitted to Office of Information and Regulatory Affairs, Office of Management and Budget, Washington, DC 20503, *AND* to Mr. Robert B. Briggs, Department of Justice Clearance Officer, Systems Policy Staff/Information Resources Management/Justice Management Division, Suite 850, WCTR, Washington, DC 20530.

Extension of a Currently Approved Collection

(1) Application for Employment—Federal Bureau of Investigation.

(2) Form FD–140. Federal Bureau of Investigation, United States Department of Justice.

(3) Primary: Individuals or households. Other: None. In March, 1995, the Office of Management and Budget (OMB) approved a revised Standard Form 85, ''Questionnaire for National Security Positions,'' pursuant to the Paperwork Reduction Act, as the exclusive form to be used by all federal agencies for investigations, preliminary to granting an individual access to classified national security information. Further, the scope of the investigation conforms to the scope of the questions on the new standard form (i.e., a seven year scope). The presumption is that the information collected on the new form is sufficient for agency purposes. However, if agencies need to collect additional information or use an alternate form, OMB's approval will be required. At the present time, all FBI employees occupy special sensitive positions and are required to possess a ''Top Secret'' security clearance. All applicants (for employment) complete an FBI application form (FD–140), rather than a Standard Form 85. The FD–140 serves the dual purpose of addressing suitability as well as security issues/concerns and calls for an investigative scope beyond the seven-year scope of the revised Standard Form 86.

(4) 50,000 annual respondents 2.0 hours per response.

(5) 100,000 annual burden hours.

(6) Not applicable under section 3504(h) of Public Law 96–511.

Public comment on this item is encouraged.

Dated: August 23, 1995.

Robert B. Briggs,

Department Clearance Officer, United States Department of Justice.

[FR Doc. 95–21340 Filed 8–28–95; 8:45 am]

BILLING CODE 4410–02–M

[AAG/A Order No. 106–95]

Privacy Act of 1974; New System of Records

Pursuant to the provisions of the Privacy Act of 1974 (5 U.S.C. 552a), notice is given that the Federal Bureau of Prisons (BOP), Office of Internal Affairs (OIA), proposes to establish a new system of records entitled, ''Bureau of Prisons, Office of Internal Affairs Investigative Records (JUSTICE/BOP–102).'' Information in this system relates to matters for which the OIA has responsibility pursuant to the Inspector General Act of 1978, 5 U.S.C. App., as amended by the Inspector General Act Amendments of 1988. Responsibilities include auditing, inspecting, and investigating BOP programs and operations with an objective to promote economy, efficiency, and effectiveness in the administration of such programs and operations and to prevent and detect fraud, waste, and abuse in such programs and operations. This system covers records relating to BOP investigations of appropriate individuals and entities (identified in the system description below). A rule document promulgating exemptions for the system appears in the Proposed Rules Section of today's **Federal Register.**

Title 5 U.S.C. 552a(e) (4) and (11) provide that the public be provided a 30-day period in which to comment on the routine uses of a new system; the Office of Management and Budget (OMB), which has oversight responsibilities under the Act, requires that it be given a 40-day period in which to review the system.

Therefore, please submit any comments by September 28, 1995. The public, OMB and Congress are invited to send written comments to Patricia E. Neely, Program Analyst, Systems Policy Staff, Justice Management Division, Department of Justice, Washington, DC 20530 (Room 850, WCTR Building).

In accordance with Privacy Act requirements, the Department of Justice has provided a report on the proposed system to OMB and the Congress. A description of the system of records is provided below.

Dated: August 15, 1995.

Stephen R. Colgate,

Assistant Attorney General for Administration.

JUSTICE/BOP–12

SYSTEM NAME:

Bureau of Prisons (BOP), Office of Internal Affairs Investigative Records, JUSTICE/BOP–012

SYSTEM LOCATIONS:

Bureau of Prisons (BOP) Central Office, 320 First Street NW., Washington, DC 20534;

BOP Northeast Regional Office, U.S. Customs House, 7th Floor, 2nd and Chestnut Street, Philadelphia, Pennsylvania, 19106;

BOP Mid-Atlantic Regional Office, Junction Business Park, 10010 Junction Drive, Suite 100N, Annapolis Junction, Maryland 20701;

BOP Southeast Regional Office, 523 McDonough Boulevard, Atlanta, Georgia 30315

BOP North Central Regional Office, Gateway Complex, Inc., Tower II, 8th Floor, 4th and State Avenue, Kansas City, Kansas 66101–2492

BOP South Central Regional Office, 4211 Cedar Springs Road, Suite 300, Dallas, Texas 75219

BOP Western Regional Office, 7950 Dublin Boulevard, 3rd Floor, Dublin, California 94568.

In addition, records may be retained at any of the BOP institutions located within the regions. A complete list may be found in 28 CFR part 503.

CATEGORIES OF INDIVIDUALS COVERED BY THE SYSTEM:

In connection with its investigative duties, the Office of Internal Affairs (OIA) will maintain records on the following categories of individuals:

a. Individuals or entities who are or have been the subject of inquiries of investigations conducted by the BOP including current or former employees of the BOP; current and former consultants, contractors, and subcontractors with whom the agency has contracted and their employees; grantees to whom the BOP has awarded grants and their employees; and such other individuals or entities whose association with the BOP relates to alleged violation(s) of the BOP's rules of conduct, the Civil Service merit system, and/or criminal or civil law, which may affect the integrity or physical facilities of the BOP.

b. Individuals who are witnesses; complainants; confidential or nonconfidential informants; and parties who have been identified by the BOP or by other agencies, by constituent units of the BOP, or by members of the general public as potential subjects of or parties to an investigation under the jurisdiction of the BOP, OIA.

CATEGORIES OF RECORDS IN THE SYSTEM:

Information relating to investigations, including:

a. Letters, memoranda, and other documents citing complaints of alleged criminal, civil or administrative misconduct.

b. Investigative files which include: Reports of investigations to resolve allegations of misconduct or violations of law with related exhibits, statements, affidavits or records obtained during investigations; prior criminal or noncriminal records of individuals as they relate to the investigations; reports from or to other law enforcement bodies; information obtained from informants and identifying data with respect to such informants; nature of allegations made against suspects and identifying data concerning such subjects; and public source materials.

AUTHORITY FOR MAINTENANCE OF THE SYSTEM:

Inspector General Act of 1978, 5 U.S.C. App., as amended by the Inspector General Act Amendments of 1988.

PURPOSE:

The BOP, OIA will maintain this system of records in order to conduct its responsibilities pursuant to the Inspector General Act of 1978, 5 U.S.C. App., as amended by the Inspector General Act Amendments of 1988. The OIA is statutorily directed to conduct and supervise investigations relating to programs and operations of the BOP; to promote economy, efficiency, and effectiveness in the administration of such programs and operations; and to prevent and detect fraud, waste and abuse in such programs and operations. Accordingly, the records in this system are used in the course of investigating individuals and entities suspected of having committed illegal or unethical acts and in conducting relating criminal prosecutions, civil proceedings, or administrative actions.

ROUTINE USES OF RECORDS MAINTAINED IN THE SYSTEM, INCLUDING CATEGORIES OF USERS AND THE PURPOSES OF SUCH USES:

Records in this system may be disclosed as follows:

a. In the event that records indicate a violation or potential violation of law, whether civil, criminal or regulatory in nature, and whether arising by general statute or particular program statute, or by rule, regulation, or order pursuant thereto, or if records indicate a violation or potential violation of the terms of a

contract or grant, the relevant records may be disclosed to the appropriate agency, whether Federal, State, local, foreign or international, charged with the responsibility of investigating or prosecuting such violation, enforcing or implementing such statute, rule, regulation or order, or with enforcing the term of such contract or grant.

b. A record may be disclosed to a Federal, State, local, foreign or international agency, or to an individual or organization when necessary to elicit information which will assist an investigation, inspection or audit.

c. A record may be disclosed to a Federal, State, local, foreign or international agency maintaining civil, criminal or other relevant information if necessary to obtain information relevant to a BOP decision concerning the assignment, hiring or retention of an individual, the issuance or revocation of a security clearance, the reporting of an investigation of an individual, the letting of a contract, or the issuance or revocation of a license, grant or other benefit.

d. A record may be disclosed to a Federal, State, local, foreign or international agency in response to its request in connection with the assignment, hiring or retention of an individual, the issuance or revocation of a security clearance, the reporting of an investigation of an individual, letting of a contract or the issuance or revocation of a license, grant, or other benefit by the requesting agency to the extent that the information is relevant and necessary to the requesting agency's decision on the matter.

e. A record may be disclosed to a Member of Congress or staff acting upon the Member's behalf when the Member or staff requests the information on behalf of, and the request of, the individual who is the subject of the record.

f. Relevant records may be disclosed to an administrative forum, including Ad Hoc forums, which may or may not include an Administrative Law Judge, and which may or may not convene public hearings/proceedings, or to other established adjudicatory or regulatory agencies, e.g., the Merit Systems Protection Board, the National Labor Relations Board, or other agencies with similar or related statutory responsibilities, where necessary to adjudicate decisions affecting individuals who are the subject of OIA investigations and/or who are covered by this system, including (but not limited to) decisions to effect any necessary remedial actions, e.g., the initiation of debt collection activity, disciplinary and/or other appropriate personnel actions, and/or other law enforcement related actions, where appropriate.

g. A record may be disclosed to complainants and/or victims to the extent necessary to provide such persons with information concerning the results of the investigation or case arising from the matters of which they complained and/or of which they were a victim.

h. A record may be disclosed to the National Archives and Records Administration and to the General Services Administration during a records management inspection conducted under 44 U.S.C. 2904 and 2906.

POLICIES AND PRACTICES FOR STORING, RETRIEVING, ACCESSING, RETAINING AND DISPOSING OF RECORDS IN THE SYSTEM:

STORAGE:

Information in this system is stored manually in file jackets and electronically in office automation equipment.

RETRIEVABILITY:

Entries are arranged alphabetically and are retrieved with reference to the surnames of the individuals covered by this system of records.

SAFEGUARDS:

Information and/or manual records are stored in safes, locked filing cabinets, and office automation equipment in secured rooms or in guarded buildings, and accessed only by authorized, screened personnel.

RETENTION AND DISPOSAL:

Records in this system are retained and disposed of in accordance with General Records Schedule 22.

SYSTEM MANAGER(S) AND ADDRESS:

Assistant Director/General Counsel, Office of General Counsel, Federal Bureau of Prisons, 320 First Street NW., Washington, DC 20534.

NOTIFICATION PROCEDURE:

Inquiries concerning this system should be directed to the System Manager listed above.

RECORDS ACCESS PROCEDURES:

The major part of this system is exempted from this requirement pursuant to 5 U.S.C. 552a (j)(2), (k)(1), and (k)(2). To the extent that this system of records is not subject to exemption, it is subject to access. A determination as to exemption shall be made at the time a request for access is received. A request for access to records contained in this system shall be made in writing, with the envelope and the letter clearly marked ''Privacy Act Request.'' Include in this request the full name of the individual involved, his or her current address, date and place of birth, notarized signature, and any other identifying number or information which may be of assistance in locating the record. The requester shall also provide a return address for transmitting the information. Access requests shall be directed to the System Manager listed above.

CONTESTING RECORD PROCEDURES:

The major part of this system is exempted from this requirement pursuant to 5 U.S.C. 552a (j)(2), (k)(1) and (k)(2). To the extent that this system of records is not subject to exemption, it is subject to access and contest. A determination as to exemption shall be made at the time a request for contest is received. Requesters shall direct their request to the System Manager listed above, stating clearly and concisely what information is being contested, the reason for contesting it, and the proposed amendment to the information.

RECORD SOURCE CATEGORIES:

The subjects of investigations; individuals with whom the subjects of investigations are associated; current and former BOP officers and employees; officials of Federal, State, local and foreign law enforcement and non-law enforcement agencies; private citizens, witnesses; confidential and nonconfidential informants; and public source materials.

SYSTEMS EXEMPTED FROM CERTAIN PROVISIONS OF THE ACT:

The Attorney General has exempted this system from subsections (c) (3) and (4), (d), (e) (1), (2), (3), (5), and (8) and (g) of the Privacy Act pursuant to 5 U.S.C. 552a(j)(2). In addition, the system has been exempted from subsections (c)(3), (d) and (e)(1) pursuant to subsections (k)(1) and (k)(2). Rules have been promulgated in accordance with the requirements of 5 U.S.C. 553 (b), (c) and (e) and have been published in the **Federal Register**.

[FR Doc. 95–21343 Filed 8–28–95; 8:45 am]

BILLING CODE 4410–05–M

Antitrust Division

Correction

AGENCY: Department of Justice.

SUMMARY: In notice *United States* v. *FTD Corporation* which appears in Vol. 60, No. 154 on page 40859, in the issue of Thursday, August 10, 1995, make the following correction:

On page 40859 in the second column, the third paragraph, line 6, the address listed as 3525 7th Street, NW., is incorrect.

Instead of 3525 7th Street NW., the address should read 325 7th Street NW., Washington, DC 20530.

Dated: August 22, 1995.

Rebecca P. Dick,

Deputy Director of Operations, Antitrust Division.

[FR Doc. 95–21317 Filed 8–28–95; 8:45 am]

BILLING CODE 4410–01–M

DEPARTMENT OF LABOR

Employment Standards Administration

Proposed Information Collection Request Submitted for Public Comment and Recommendations; Application for Continuation of Death Benefits for Student

ACTION: Notice.

SUMMARY: The Department of Labor, as part of its continuing effort to reduce paperwork and respondent burden, conducts a preclearance consultation program to provide the general public and Federal agencies with an opportunity to comment on proposed and/or continuing collections of information in accordance with the Paperwork Reduction Act of 1995 (PRA95) (44 U.S.C. 3506(c)(2)(A)). This program helps to ensure that requested data can be provided in the desired format, reporting burden is minimized, reporting forms are clearly understood, and the impact of collection requirements on respondents can be properly assessed. Currently, the Employment Standards Administration is soliciting comments concerning the proposed extension collection of the Application for Continuation of Death Benefits for Student, under the Longshore and Harbor Workers' Compensation Act. A copy of the proposed information collection request can be obtained by contacting the employee listed below in the **ADDRESSEE** section of this notice.

DATES: Written comments must be submitted on or before October 29, 1995. Written comments should address the accuracy of the burden estimates and ways to minimize the burden including the use of automated collection techniques or the use of other forms of information technology, as well as other relevant aspects of the information collection request.

ADDRESSEE: Ms. Patricia Forkel, Office of Management, Administration and Planning, U.S. Department of Labor, 200 Constitution Avenue NW., Room S–3201, Washington, DC 20210, (202) 219–7601 (this is not a toll free number).

SUPPLEMENTARY INFORMATION:

I. Background

The Office of Workers' Compensation Programs, which administers the Longshore and Harbor Workers Compensation Act, uses this form as an application for continuation of death benefits for a dependent who is also a student.

II. Continuation of this information collection is necessary for the Agency to determine the proper status of a student and his/her continued entitlement to benefits.

Type of Review: Extension
Agency: Employment Standards Administration
Title: Application for Continuation of Death Benefits for Student
OMB Number: 1215–0073
Agency Number: LS–266
Frequency: On occasion
Affected Public: Individuals or households; Businesses or other for-profit
Number of Respondents: 43
Estimated Time per Respondent: 30 minutes
Total Burden Hours: 22.

Comments submitted in response to this notice will be summarized and/or included in the request for Office of Management and Budget approval of the information collection request; they will also become a matter of public record.

Dated: August 23, 1995.

Cecily A. Rayburn,

Director, Division of Financial Management, Office of Management, Administration and Planning, Employment Standards Administration.

[FR Doc. 95–21423 Filed 8–28–95; 8:45 am]

BILLING CODE 4510–27–M

Mine Safety and Health Administration

RIN: 1219–AA74

Public Workshops on Miners' Exposure to Diesel Particulate

AGENCY: Mine Safety and Health Administration, Labor.

ACTION: Notice of public workshops.

SUMMARY: The Mine Safety and Health Administration (MSHA) will co-sponsor with the Bureau of Mines three workshops to discuss miners' exposure to diesel particulate. The purpose of the workshops is to discuss the potential health risks to miners from exposure to diesel particulate, technologies available to measure and to control diesel particulate in mine environments, and regulatory or other approaches to ensure that a healthful work environment is maintained. The workshops are intended as a forum for those who have a stake in limiting the exposure of miners to diesel particulate.

DATES: The workshops will be held as follows:

1. September 12 and 13, 1995, at the National Mine Health and Safety Academy in Beckley, West Virginia.

2. October 6, 1995, in Mt. Vernon, Illinois.

3. October 11 and 12, 1995, in Salt Lake City, Utah.

FOR FURTHER INFORMATION CONTACT: Keith Gaskill, Division of Educational Policy and Development, Mine Safety and Health Administration, Arlington, Virginia, 703–235–1400 or by fax: 703–235–9412.

SUPPLEMENTARY INFORMATION: Several studies have found diesel particulate matter to present a potential health risk to workers. The workshops will bring together persons and organizations who have an interest in controlling the exposure of miners to particulate in diesel exhaust. These will include mine operators, labor unions, trade organizations, engine manufacturers, fuel producers, exhaust aftertreatment manufacturers, and academia. Registration materials may be obtained from Keith Gaskill, MSHA's contact person. There is no fee for attending the workshops; however, attendance is limited by space available.

September 12–13, 1995:

The two day workshop at the National Mine Health and Safety Academy in Beckley, West Virginia, will begin with registration starting at 7:00 a.m. and the welcoming address at 8:00 a.m. on Tuesday, September 12, 1995. The workshop will end at 4:00 p.m. on Wednesday, September 13, 1995.

October 6, 1995:

The one day workshop in Mt. Vernon, Illinois, will begin with registration starting at 7:00 a.m. and the welcoming address at 8:00 a.m. on Friday, October 6, 1995. The workshop will end at 5:00 p.m. the same day.

October 11–12, 1995:

The one and one-half day workshop in Salt Lake City, Utah, will begin with registration starting at 12:00 noon and the welcoming address at 1:00 p.m. on Wednesday, October 11, 1995. The workshop will end at 4:00 p.m. on Thursday, October 12, 1995.

Dated: August 23, 1995.

J. Davitt McAteer,

Assistant Secretary for Mine Safety and Health.

[FR Doc. 95–21371 Filed 8–28–95; 8:45 am]

BILLING CODE 4510–43–P

Pension and Welfare Benefits Administration

[Prohibited Transaction Exemption 95–71; Exemption Application No. D–09582, et al.]

Grant of Individual Exemptions; Retirement Plan for Employees of United Jewish Appeal-Federation of Jewish Philanthropies of New York, Inc. and Affiliated Agencies and Institutions (the Plan), et al.

AGENCY: Pension and Welfare Benefits Administration, Labor.

ACTION: Grant of Individual Exemptions.

SUMMARY: This document contains exemptions issued by the Department of Labor (the Department) from certain of the prohibited transaction restrictions of the Employee Retirement Income Security Act of 1974 (the Act) and/or the Internal Revenue Code of 1986 (the Code).

Notices were published in the **Federal Register** of the pendency before the Department of proposals to grant such exemptions. The notices set forth a summary of facts and representations contained in each application for exemption and referred interested persons to the respective applications for a complete statement of the facts and representations. The applications have been available for public inspection at the Department in Washington, D.C. The notices also invited interested persons to submit comments on the requested exemptions to the Department. In addition the notices stated that any interested person might submit a written request that a public hearing be held (where appropriate). The applicants have represented that they have complied with the requirements of the notification to interested persons. No public comments and no requests for a hearing, unless otherwise stated, were received by the Department.

The notices of proposed exemption were issued and the exemptions are being granted solely by the Department because, effective December 31, 1978, section 102 of Reorganization Plan No. 4 of 1978 (43 FR 47713, October 17, 1978) transferred the authority of the Secretary of the Treasury to issue exemptions of the type proposed to the Secretary of Labor.

Statutory Findings

In accordance with section 408(a) of the Act and/or section 4975(c)(2) of the Code and the procedures set forth in 29 CFR Part 2570, Subpart B (55 FR 32836, 32847, August 10, 1990) and based upon the entire record, the Department makes the following findings:

(a) The exemptions are administratively feasible;

(b) They are in the interests of the plans and their participants and beneficiaries; and

(c) They are protective of the rights of the participants and beneficiaries of the plans.

Retirement Plan for Employees of United Jewish Appeal-Federation of Jewish Philanthropies of New York, Inc. and Affiliated Agencies and Institutions (the Plan) Located in New York, New York

[Prohibited Transaction Exemption 95–71; Exemption Application No. D–09582]

Exemption

The restrictions of sections 406(a), 406(b)(1) and (b)(2) of the Act and the sanctions resulting from the application of section 4975 of the Code, by reason of section 4975(c)(1)(A) through (E) of the Code, shall not apply effective May 29, 1990, to the past purchase and sale of certain securities (the Securities) on May 29, 1990, between the Plan and the endowment fund (the Fund) of the United Jewish Appeal-Federation of Jewish Philanthropies of New York, Inc. (the Federation), a sponsor of the Plan and a party in interest with respect to the Plan; provided that the following conditions are satisfied:

(a) The transfer of the Securities was a one-time cash transaction;

(b) The transaction was at fair market value as determined by the closing prices on May 25, 1990, on the New York Stock Exchange (NYSE) and the American Stock Exchange (AMEX);

(c) The Plan paid no commissions with respect to the transaction;

(d) The Federation determined upon consultation with Delaware Investment Advisors to engage in the transaction;

(e) The Securities transferred from the Fund to the Plan were all listed on either the NYSE or AMEX, and constituted exactly a 50% pro rata share of all the securities then owned by the Fund; and

(f) Over a three plan year period, the Federation will contribute $513,009.39 to the Plan to make up the loss sustained by the Plan when the Securities were sold out of the Plan portfolio.

EFFECTIVE DATE: This exemption will be effective as of May 29, 1990.

For a more complete statement of facts and representations supporting the Department's decision to grant this exemption refer to the notice of proposed exemption published on June 29, 1995 at 60 FR 33860/33861.

FOR FURTHER INFORMATION CONTACT: Ekaterina A. Uzlyan of the Department at (202) 219–8883. (This is not a toll-free number.)

Apartment Laundries, Inc. Profit Sharing Plan (the Plan), Located in Tulsa, Oklahoma

[Prohibited Transaction Exemption 95–72; Application No.: D–09835]

The restrictions of sections 406(a), 406 (b)(1) and (b)(2) of the Act and the sanctions resulting from the application of section 4975 of the Code, by reason of section 4975(c)(1) (A) through (E) of the Code shall not apply to the lease (the Lease) of improved property (the Property) by the individual account of James L. Sharp (the Account) in the Plan to Apartment Laundries, a party in interest with respect to the Plan provided that the following conditions are met: (1) the terms of the Lease are and will remain at least as favorable as the Plan could obtain in an arm's length transaction with an unrelated party; (2) the Property's fair market rental value has been and will continue to be determined on an annual basis by a qualified, independent appraiser; and (3) the fair market value of the Property, as determined by a qualified, independent appraiser, represents no more than 25% of value of the assets in the Account.

For a more complete statement of the facts and representations supporting this exemption, refer to the notice of proposed exemption published on July 12, 1995 at 60 FR 35942.

FOR FURTHER INFORMATION CONTACT: Allison Padams, of the Department, telephone (202) 219–8971. (This is not a toll-free number.)

General Motors Hourly-Rate Employees Pension Plan, General Motors Retirement Program for Salaried Employees (the Salaried Plan), Saturn Individual Retirement Plan for Represented Team Members, Saturn Personal Choices Retirement Plan for Non-Represented Team Members, and Employees' Retirement Plan for GMAC Mortgage Corporation (collectively, the Plans) Located in New York, New York

[Prohibited Transaction Exemption 95–73; Exemption Application Nos. D–09859 through D–09863]

Exemption

The restrictions of sections 406(a) of the Act and the sanctions resulting from

the application of section 4975 of the Code, by reason of section 4975(c)(1) (A) through (D) of the Code, shall not apply, effective April 9, 1994, to the acquisition by the Plans of limited partnership interests (the Interests) in APA Excelsior III, L.P. from Metropolitan Life Insurance Company (Metropolitan), a party in interest with respect to the Plans; provided that the following conditions are satisfied:

(A) All terms and conditions of the transaction were at least as favorable to the Plans as those which the Plans could obtain in an arm's-length transaction with an unrelated party;

(B) Metropolitan is not, and has not been, a fiduciary with respect to any assets of the Plans involved in the transaction;

(C) The transaction was a one-time transaction for cash in which the purchase price did not exceed the fair market value of the Interests;

(D) The methodology for determining the fair market value of the Interests was in accordance with standards maintained by professional venture capital valuation specialists for the valuation of limited partnership interests in venture capital partnerships; and

(E) Metropolitan did not participate in the Plans' determination of the fair market value of the Interests.

EFFECTIVE DATE: This exemption is effective as of April 9, 1994.

For a more complete statement of the facts and representations supporting this exemption, refer to the notice of proposed exemption published on June 29, 1995 at 60 FR 33861.

FOR FURTHER INFORMATION CONTACT: Ronald Willett of the Department, telephone (202) 219–8881. (This is not a toll-free number.)

First and Farmers Bank of Somerset, Inc. (the Bank) Located in Somerset, Kentucky

[Prohibited Transaction Exemption 95–74; Application Numbers D–09921 through D–09926]

Exemption

The restrictions of sections 406(a), 406(b)(1) and 406(b)(2) of the Act and the sanctions resulting from the application of section 4975 of the Code, by reason of section 4975(c)(1) (A) through (E) of the Code, shall not apply, as of April 25, 1995, to the cash sale of certain collateralized mortgage obligations (CMOs) held by six employee benefit plans for which the Bank acts as trustee (the Plans) to the Bank, a party in interest with respect to the Plans.

This exemption is subject to the following conditions:

(1) Each sale was a one-time transaction for cash;

(2) Each Plan received an amount that was equal to the greater of: (a) the outstanding principal balance for each CMO owned by the Plans, plus accrued but unpaid interest, at the time of the sale; (b) the amortized cost for each CMO owned by the Plans, plus accrued but unpaid interest, as determined by the Bank on the date of the sale; or (c) the fair market value of each CMO owned by the Plans as determined by the Bank on the basis of reasonable inquiry from at least three sources that are broker-dealers or pricing services independent of the Bank at the time of the sale;

(3) The Plans did not pay any commissions or other expenses with respect to the sale;

(4) The Bank, as trustee of the Plans, determined that the sale of the CMOs was in the best interests of each of the Plans and their participants and beneficiaries at the time of the transaction;

(5) The Bank took all appropriate actions necessary to safeguard the interests of the Plans and their participants and beneficiaries in connection with the transactions; and

(6) Each Plan received a reasonable rate of return on the CMOs during the period of time that it held the CMOs.

EFFECTIVE DATE: This exemption is effective as of April 25, 1995.

For a more complete statement of the facts and representations supporting the Department's decision to grant this exemption refer to the notice of proposed exemption Notice published on June 29, 1995, at 60 FR 33864.

FOR FURTHER INFORMATION CONTACT: Mr. E. F. Williams of the Department, telephone (202) 219–8194. (This is not a toll-free number.)

Construction Laborers Pension Trust for Southern California (the Trust) Located in El Monte, California

[Prohibited Transaction Exemption 95–75; Application No. D–09932]

Exemption

The restrictions of section 406(a) of the Act and the sanctions resulting from the application of section 4975 of the Code by reason of section 4975(c)(1) (A) through (D) of the Code, shall not apply, effective December 22, 1989, to the leasing (the Lease) of space in a commercial office building owned by 4401 Santa Anita Corporation (the Corporation), a corporation that is wholly-owned by the Trust, to American Benefit Plan Administrators, Inc., a party in interest with respect to the Trust.

This exemption is conditioned on the following requirements: (1) The terms of all such leasing arrangements have been, and will remain, at least as favorable to the Trust as those obtainable in an arm's length transaction with an unrelated party; (2) an independent, qualified fiduciary determined, at the Lease's inception, that the Lease was in the best interests of the Trust and its participants and beneficiaries; (3) an independent, qualified fiduciary has monitored and will continue to monitor the Lease for the Trust and the terms and conditions of the exemption; and (4) the rental charged by, and paid to, the Corporation under the Lease has been, and will continue to be, the fair market rental value of the premises as determined by an independent, qualified appraiser.

EFFECTIVE DATE: This exemption is effective as of December 22, 1989.

For a more complete statement of the facts and representations supporting the Department's decision to grant this exemption refer to the notice of proposed exemption published on May 22, 1995 at 60 FR 27125.

FOR FURTHER INFORMATION CONTACT: Mr. E. F. Williams of the Department, telephone (202) 219–8194. (This is not a toll-free number.)

General Information

The attention of interested persons is directed to the following:

(1) The fact that a transaction is the subject of an exemption under section 408(a) of the Act and/or section 4975(c)(2) of the Code does not relieve a fiduciary or other party in interest or disqualified person from certain other provisions to which the exemptions does not apply and the general fiduciary responsibility provisions of section 404 of the Act, which among other things require a fiduciary to discharge his duties respecting the plan solely in the interest of the participants and beneficiaries of the plan and in a prudent fashion in accordance with section 404(a)(1)(B) of the Act; nor does it affect the requirement of section 401(a) of the Code that the plan must operate for the exclusive benefit of the employees of the employer maintaining the plan and their beneficiaries;

(2) These exemptions are supplemental to and not in derogation of, any other provisions of the Act and/or the Code, including statutory or administrative exemptions and transactional rules. Furthermore, the fact that a transaction is subject to an administrative or statutory exemption is

not dispositive of whether the transaction is in fact a prohibited transaction; and

(3) The availability of these exemptions is subject to the express condition that the material facts and representations contained in each application are true and complete and accurately describe all material terms of the transaction which is the subject of the exemption. In the case of continuing exemption transactions, if any of the material facts or representations described in the application change after the exemption is granted, the exemption will cease to apply as of the date of such change. In the event of any such change, application for a new exemption may be made to the Department.

Signed at Washington, D.C., this 24th day of August, 1995.

Ivan Strasfeld,

Director of Exemption Determinations, Pension and Welfare Benefits Administration, U.S. Department of Labor.

[FR Doc. 95–21392 Filed 8–28–95; 8:45 am]

BILLING CODE 4510–29–P

NATIONAL AERONAUTICS AND SPACE ADMINISTRATION

[Notice 95–078]

NASA Advisory Council; Life and Microgravity Sciences and Applications Advisory Committee; Aerospace Medicine and Occupational Health Advisory Subcommittee Meeting

AGENCY: National Aeronautics and Space Administration.

ACTION: Notice of meeting.

SUMMARY: In accordance with the Federal Advisory Committee Act, Pub. L. 92–463, as amended, the National Aeronautics and Space Administration announces a meeting of the NASA Advisory Council, Life and Microgravity Sciences and Applications Advisory Committee, Aerospace Medicine and Occupational Health Advisory Subcommittee.

DATES: September 27, 1995, 8:30 a.m. to 5:30 p.m.; and September 28, 1995, 8:30 a.m. to 12:30 p.m..

ADDRESSES: Room MIC 6 (HQ6H46), NASA Headquarters, 300 E Street, SW, Washington, DC 20546.

FOR FURTHER INFORMATION CONTACT: Dr. Earl Ferguson, Code UO, National Aeronautics and Space Administration, Washington, DC 20546, 202/358–4538.

SUPPLEMENTARY INFORMATION: The meeting will be closed to the public on Thursday, September 28, 1995, from 11:00 a.m. to 11:30 a.m. in accordance with 5 U.S.C. 522b (c)(6), to allow for discussion on qualifications of individuals being considered for membership to the Committee. The remainder of the meeting will be open to the public up to the seating capacity of the room. The agenda for the meeting is as follows:

—Mir 18 Medical Operations
—Medical Plan for Monitoring, Normative Data, and Countermeasures
—Medical Requirements Process
—Human Research Issues
—Life Sciences Research Institute
—Discussin of Long Range Research Requirements
—Discussion of Committee Communications
—Occupational Health and Aviation Health Center Variances, Future Considerations
—Discussion of Action Items
—Summary of Findings and Recommendations

It is imperative that the meeting be held on these dates to accommodate the scheduling priorities of the key participants. Visitors will be requested to sign a visitor's register

Dated: August 23, 1995.

Danalee Green,

Chief, Management Controls Office , National Aeronautics and Space Administration.

[FR Doc. 95–21416 Filed 8–28–95; 8:45 am]

BILLING CODE 7510–01–M

NATIONAL SCIENCE FOUNDATION

Special Emphasis Panel in Design, Manufacture, and Industrial Innovation; Notice of Meeting

In accordance with the Federal Advisory Committee Act (Pub. L. 92–463, as amended), the National Science Foundation announces the following meeting:

Name: Special Emphasis Panel in Design, Manufacture, and Industrial Innovation—#1194.

Date and Time: September 15, 1995.

Place: Room 375, National Science Foundation, 4201 Wilson Boulevard Arlington, VA 22230.

Type of Meeting: Closed.

Contact Person: Tony Centodocati, Program Director, SBIR Office, (703) 306–1390 or John Van Rosendale, CISE, (703) 306–1962, National Science Foundation, 4201 Wilson Boulevard Arlington, VA 22230

Purpose of Meeting: To provide advice and recommendations concerning proposals submitted to the NSF for financial support.

Agenda: To review and evaluate Phase I Small Business proposals as part of the selection process for awards.

Reason for Closing: The proposals being reviewed include information of a proprietary or confidential nature, including technical information; financial data, such as salaries; and personal information concerning individuals associated with the proposals. These matters are exempt under 5 U.S.C. 552b(c) (4) and (6) of the Government in the Sunshine Act.

Dated: August 24, 1995.

M. Rebecca Winkler,

Committee Management Officer.

[FR Doc. 95–21428 Filed 8–28–95; 8:45 am]

BILLING CODE 7555–01–M

NUCLEAR REGULATORY COMMISSION

[Docket Nos. 50–321 and 50–366]

Georgia Power Co., et al.; Partial Withdrawal of Application for Amendments to Facility Operating Licenses

The U.S. Nuclear Regulatory Commission (the Commission) has granted the request of Georgia Power Company, et al. (the licensee), to withdraw a proposed revision to the local power range monitor (LPRM) calibration frequency which was included in its February 25, 1994, application for proposed amendments to Facility Operating License Nos. DRP–57 and NPR–5 for the Hatch Nuclear Plant, Unit Nos. 1 and 2, located in Appling County, Georgia.

The Commission had previously issued a Notice of Consideration of Issuance of Amendments published in the **Federal Register** on August 18, 1995 (59 FR 42607).

The amendments, which were issued March 3, 1995, replaced the previous Technical Specifications and associated Bases with a set based on the new Boiling Water Reactor (BWR) Owners Group Standard Technical Specifications, NUREG–1433, ''Standard Technical Specifications General Electric Plants, BWR/4.'' However, the increase of the LPRM calibration frequency could not be approved without further justification because it was outside the scope of the conversion to NUREG–1433.

By letter dated August 7, 1995, the licensee requested that the LPRM revision be withdrawn, and stated that it would pursue the change as a separate issue.

For further details with respect to this action, see (1) the application for amendments dated February 25, 1995, as supplemented by letters dated July 8, August 8 and 31, September 23, October 19, and November 1, 1994, and January 19, 1995 (two letters), (2) Amendments 195 and 135 to Facility Operating Licenses DPR–57 and NPF–5 dated

March 3, 1995, and (3) the licensee's letter dated August 7, 1995, which withdrew the proposed revision to the LPRM calibration frequency. The above documents are available for public inspection at the Commission's Public Document Room, the Gelman Building, 2120 L Street, NW., Washington, DC, and at the local public document room located at the Appling County Public Library, 301 City Hall Drive, Baxley, Georgia.

Dated at Rockville, Md., this 22nd day of August, 1995.

For the Nuclear Regulatory Commission.

Kahtan N. Jabbour,

Project Manager, Project Directorate II–2, Division of Reactor Projects–I/II, Office of Nuclear Reactor Regulation.

[FR Doc. 95–21388 Filed 8–28–95; 8:45 am]

BILLING CODE 7590–01–P

OFFICE OF PERSONNEL MANAGEMENT

Excepted Service

AGENCY: Office of Personnel Management.

ACTION: Notice.

SUMMARY: This gives notice of positions placed or revoked under Schedules A and B, and placed under Schedule C in the excepted service, as required by Civil Service Rule VI, Exceptions from the Competitive Service.

FOR FURTHER INFORMATION CONTACT: Patricia Paige, (202) 606–0830.

SUPPLEMENTARY INFORMATION: The Office of Personnel Management published its last monthly notice updating appointing authorities established or revoked under the Excepted Service provisions of 5 CFR 213 on June 22, 1995 (60 FR 32568). Individual authorities established or revoked under Schedules A and B and established under Schedule C between July 1, 1995, and July 31, 1995, appear in the listing below. Future notices will be published on the fourth Tuesday of each month, or as soon as possible thereafter. A consolidated listing of all authorities as of June 30, will also be published.

Schedule A

No Schedule A authorities were established or revoked in July 1995.

Schedule B

No Schedule B authorities were established or revoked in July 1995.

Schedule C

The following Schedule C authorities were established in July 1995.

Consumer Product Safety Commission

Special Assistant (Legal) to the Commissioner. Effective July 26, 1995.

Department of Agriculture

Confidential Assistant to the Administrator, Agricultural Research Service. Effective July 26, 1995.

Area Director to the Deputy Administrator, State and County Operation, Agricultural Conservation and Stabilization Service. Effective July 26, 1995.

Department of Commerce

Confidential Assistant to the Deputy Assistant Secretary for Intergovernmental Affairs. Effective July 21, 1995.

Assistant Director for Communications to the Director, Bureau of the Census. Effective July 21, 1995.

Confidential Assistant to the Director of Legislative, Intergovernmental and Public Affairs. Effective July 21, 1995.

Confidential Assistant to the Director, Office of Public Affairs. Effective July 21, 1995.

Director, Executive Secretariat to the Chief of Staff. Effective July 27, 1995.

Special Assistant to the Chief of Staff. Effective July 28, 1995.

Department of Defense

Special Assistant for Demand Reduction to the Deputy Assistant Secretary of Defense (Drug Enforcement Policy and Support). Effective July 20, 1995.

Chauffeur to the Deputy Secretary of Defense. Effective July 27, 1995.

Department of Education

Confidential Assistant to the Special Assistant. Effective July 6, 1995.

Special Assistant to the Secretary's Regional Representative, Region IX. Effective July 21, 1995.

Special Assistant to the Assistant Secretary, Office of Elementary and Secondary Education. Effective July 24, 1995.

Confidential Assistant to the Director, Scheduling and Briefing Staff. Effective July 24, 1995.

Special Assistant to the Director, Office of Public Affairs. Effective July 28, 1995.

Department of Energy

Special Assistant to the Assistant Secretary for Environmental Management. Effective July 10, 1995.

Staff Assistant to the Deputy Assistant Secretary for Technical and Financial Assistance. Effective July 10, 1995.

Department of Health and Human Services

Special Assistant to the Director, Office of Community Services. Effective July 10, 1995.

Executive Assistant to the Assistant Secretary for Human Development Services, Administration for Children and Families. Effective July 14, 1995.

Executive Assistant for Legislative Projects to the Assistant Secretary for Health. Effective July 17, 1995.

Department of Housing and Urban Development

Legislative Officer to the Deputy Assistant Secretary for Legislation. Effective July 24, 1995.

Special Assistant to the Assistant Secretary for Public Affairs. Effective July 24, 1995.

Special Assistant to the Assistant Secretary for Public Affairs. Effective July 27, 1995.

Deputy Assistant Secretary for Plans and Policy to the Assistant Secretary for Congressional and Intergovernmental Relations. Effective July 27, 1995.

Deputy Assistant for Legislation to the Assistant Secretary for Congressional and Intergovernmental Relations. Effective July 28, 1995.

Assistant for Congressional Relations to the Assistant Secretary for Congressional Relations. Effective July 28, 1995.

Department of the Interior

Special Assistant to the Deputy Chief of Staff. Effective July 28, 1995.

Department of Labor

Special Assistant to the Chief Economist. Effective July 6, 1995.

Special Assistant to the Assistant Secretary for Public Affairs. Effective July 19, 1995.

Special Assistant to the Assistant Secretary of Labor. Effective July 21, 1995.

Department of Treasury

Attorney-Advisor to the General Counsel. Effective July 10, 1995.

Environmental Protection Agency

Assistant to the Deputy Administrator for External Affairs. Effective July 10, 1995.

Policy Advisor to the Assistant Administrator. Effective July 10, 1995.

Equal Employment Opportunity Commission

Special Assistant to the Chairman. Effective July 28, 1995.

Farm Credit Administration

Public & Congressional Affairs Specialist to the Director, Congressional

and Public Affairs. Effective July 26, 1995.

Office of Management and Budget

Confidential Assistant to the Executive Associate Director. Effective July 10, 1995

Special Assistant to the Controller. Effective July 14, 1995.

Staff Assistant to the Executive Associate Director. Effective July 27, 1995.

President's Commission on White House Fellowships

Special Assistant to the Director, President's Commission on White House Fellowships. Effective July 26, 1995.

Small Business Administration

Executive Assistant to the Administrator of the Small Business Administration. Effective July 6, 1995.

Associate Administrator for Field Operations to the Administrator. Effective July 6, 1995.

U.S. International Trade Commission

Confidential Assistant to the Chairman. Effective July 7, 1995.

United States Tax Court

Trial Clerk to the Judge. Effective July 21, 1995.

Authority: 5 U.S.C. 3301 and 3302; E.O. 10577, 3 CFR 1954–1958 Comp., P. 218.

Office of Personnel Management.

Lorraine A. Green,

Deputy Director.

[FR Doc. 95–21328 Filed 8–28–95; 8:45 am]

BILLING CODE 6325–01–M

PENSION BENEFIT GUARANTY CORPORATION

Request for OMB Extension of Approval of Collection of Information: Distress Terminations of Single-Employer Plans; Standard Terminations of Single-Employer Plans

AGENCY: Pension Benefit Guaranty Corporation.

ACTION: Notice of request for extension of OMB approval.

SUMMARY: This notice advises the public that the Pension Benefit Guaranty Corporation has requested an extension of the approval by the Office of Management and Budget for the collection of information contained in its regulations on Distress Terminations of Single-Employer Plans (29 CFR part 2616) and Standard Terminations of Single-Employer Plans (29 CFR part 2617) and implementing forms and instructions. Current approval of this collection of information expires on December 31, 1995.

ADDRESSES: All written comments should be addressed to: Office of Management and Budget, Paperwork Reduction Project, Washington, DC 20503. The request for approval will be available for public inspection at the PBGC's Communications and Public Affairs Department, Suite 240, 1200 K Street, NW., Washington, DC 20005–4026.

FOR FURTHER INFORMATION CONTACT: Harold J. Ashner, Assistant General Counsel, Catherine B. Klion, Attorney, Office of the General Counsel, Pension Benefit Guaranty Corporation, 1200 K Street, NW., Washington, DC 20005–4026; telephone 202–326–4024 (202–326–4179 for TTY and TDD).

SUPPLEMENTARY INFORMATION: The PBGC is requesting that the Office of Management and Budget extend for three years its approval of the collection of information contained in the PBGC's regulations on Distress Terminations of Single-Employer Plans (29 CFR part 2616) and Standard Terminations of Single-Employer Plans (29 CFR part 2617) and implementing forms and instructions.

Under section 4041 of the Employee Retirement Income Security Act of 1974, as amended (19 U.S.C. 1341), a single-employer pension plan may terminate voluntarily only if it satisfies the requirements for either a standard or a distress terminations, and section 4041(c), for distress terminations, a plan administrator wishing to terminate a plan is required to submit specified information to the PBGC in support of the proposed termination and to provide specified information regarding the proposed termination to third parties (participants, beneficiaries, alternate payees, and employee organizations).

The PBGC needs the required information to enable it to ensure compliance with the statutory and regulatory requirements for terminations and to determine whether a particular termination may be completed. Third parties need the required information for that they will be informed about the status of their plan's proposed termination and about their benefits upon termination.

The disclosures to third parties contained in this collection of information currently are not subject to the requirements of the Paperwork Reduction Act (*Dole* v. *United Steelworkers of America,* 494 U.S. 26 (1990)). However, under recent legislation, the Paperwork Reduction Act of 1995 (Pub. L. No. 104–13, 109 Stat. 163 (1995)), these disclosures will be subject to those requirements effective October 1, 1995.

The PBGC estimates that, over the next three years, 5000 plans terminating in standard terminations and 40 plans terminating in distress terminations will be subject to this collection of information annually. The PBGC further estimates that the annual burden of this collection of information will average 6.48 hours per plan, with an average total annual burden of 32,653 hours.

Issued at Washington, DC this 24th day of Aug., 1995.

Martin Slate,

Executive Director, Pension Benefit Guaranty Corporation.

[FR Doc. 95–21369 Filed 8–28–95; 8:45 am]

BILLING CODE 7708–01–M

POSTAL SERVICE

Revised PS Form 3526, Statement of Ownership, Management, and Circulation

AGENCY: Postal Service.

ACTION: Final form.

SUMMARY: On August 31, 1994, the Postal Service published for public comment in the **Federal Register** (59 FR 45044–45047) an interim edition of PS Form 3526, Statement of Ownership, Management, and Circulation. This notice announces that the Postal Service has adopted this interim edition with additional minor revisions.

Publishers are required to provide the Postal Service certain information for each of their publications authorized second-class mail privileges. The Postal Service uses information from PS Form 3526 to determine whether these publications continue to qualify for such privileges. 39 U.S.C. 3685.

EFFECTIVE DATE: September 1, 1995.

FOR FURTHER INFORMATION CONTACT: Robert Bokor, (212) 613–8739.

SUPPLEMENTARY INFORMATION: Publishers are required each year to provide the Postal Service certain information by October 1 for each of their publications authorized second-class mail privileges. The Postal Service uses the information to help determine whether the second-class publication continues to qualify for such privileges. 39 U.S.C. 3685. Publishers provide this information by completing PS Form 3526, Statement of Ownership, Management, and Circulation, and submitting it to the Postal Service.

PS Form 3526 was revised on an interim basis for the October 1, 1994, filing requirement. The revised form

required publishers of second-class publications to calculate the percentage of paid or requested circulation of each publication. A copy of the form, showing an October 1994 edition date, was reproduced for public comment in the **Federal Register** on August 31, 1994 (59 FR 45044–45047). No comments were received.

The final version of the form, showing a September 1995 edition date, contains only two additional changes to the October 1994 edition. This version provides space for including a contact name and telephone number and space for indicating the issue date in which the Statement of Ownership was printed. The form also includes minor editorial and graphic changes that clarify instructions on the form.

Publishers may use either the October 1994 edition or the September 1995 edition of PS Form 3526 to meet the requirement for the October 1 filing of information about authorized second-class publications.

Stanley F. Mires,

Chief Counsel, Legislative.

[FR Doc. 95–21391 Filed 8–28–95; 8:45 am]

BILLING CODE 7710–12–P

National Business Partners' Program

AGENCY: Postal Service.

ACTION: Notice of program.

SUMMARY: The U.S. Postal Service has implemented the National Business Partners' Program for developing working relationships between its Postal Business Centers (PBCs) and local service vendors. This program should generate additional business activity in mailing-related industries while increasing awareness of postal products and services. The Business Partners' Program includes a seminar on postal products and services that is required for vendors interested in participating. This seminar provides vendors with a better understanding of how the PBCs can support their efforts to expand business.

EFFECTIVE DATES: October 5 through November 30, 1995; January 2 through February 29, 1996.

FOR FURTHER INFORMATION CONTACT: Your local post office for the telephone number of the nearest Postal Business Center; or the Postal Service National Customer Support Center, 1–800–238–3150.

SUPPLEMENTARY INFORMATION: The Postal Service has developed the National Business Partners' Program as a means of identifying local service vendors that can help potential business mailers learn how to benefit from using the mail, lower their postage costs, and prepare their mail more efficiently. Relationships with business partners have been successfully established at the national and local level. The objective of the Postal Service is to develop and maintain these relationships in order to increase mail volume and mutual revenues.

The Business Partners' Program is available through the Postal Service's network of Postal Business Centers in 100 locations nationwide. Prospective partners are third-party vendors that can offer business mailers such services as printing, presorting, prebarcoding, addressing, and direct mail marketing. Business partners are strong influencers of the customer base of the Postal Service and are frequently stakeholders in the entire postal distribution and delivery process. Postal Business Centers are currently identifying local vendors and mailing to them information about the program.

The program requires vendors to attend a three-part seminar that covers mailpiece design, basics of postage discount programs, and value-added products and services. Participation in the seminar enhances a vendor's knowledge of postal products and mailing requirements, while developing a working relationship with the local Postal Business Centers. Each participant in the program will receive a seminar certificate, valid for 1 year. Participation in a Business Partners' seminar costs $40 for each attendee. Group rates and on-site rates are also available.

After completing the seminar, participating vendors become eligible to be listed in a local Business Partners' directory. Customers seeking assistance in fulfilling their mailing needs can use the directory as a reference to find vendors that specialize in mailing-related services. These directories will be distributed at scheduled Ad Mail and other customer education seminars. The validation period for a directory listing will be 1 calendar year, and vendors will be required to attend the three-part seminar every year to maintain a listing in the directory.

The Business Partners' program is one of many services provided by the Postal Business Centers for local business mailers. Consultants are on hand at the Postal Business Centers to help mailers learn how to qualify for discounted postage rates and use the postal system more efficiently.

Stanley F. Mires,

Chief Counsel, Legislative.

[FR Doc. 95–21390 Filed 8–28–95; 8:45 am]

BILLING CODE 7710–12–P

SECURITIES AND EXCHANGE COMMISSION

Forms Under Review by Office of Management and Budget

Agency Clearance Officer: Michael E. Bartell (202) 942–8800.

Upon written request copy available from: Securities and Exchange Commission Office of Filings and Information Services, Washington, D.C. 20549.

Extension: Form 15; File No. 270–170.

Notice is hereby given pursuant to the Paperwork Reduction Act of 1980 (44 U.S.C. 3501 *et seq.*), that the Securities and Exchange Commission (''Commission'') has submitted for OMB approval extension of Form 15.

Form 15 is a certification of termination of a registration of a class of security under Section 12(g) or a notice of suspension of duty to file reports pursuant to Sections 13 and 15(d) of the Securities Exchange Act of 1934. Form 15 is filed by an estimated 1,096 filers annually for a total burden of 1,644 hours.

General comments regarding the estimated burden hours should be directed to the OMB Clearance Officer at the address below. Any comments concerning the accuracy of the estimated average burden hours for compliance with Commission rules and forms should be directed to Michael E. Bartell, Securities and Exchange Commission, 450 Fifth Street, N.W., Washington, D.C. 20549 and Clearance Officer, Project No. 3235–0167, Office of Management and Budget, Room 3208, New Executive Office Building, Washington, D.C. 20503.

Dated: August 18, 1995.

Margaret H. McFarland,

Deputy Secretary.

[FR Doc. 95–21355 Filed 8–28–95; 8:45 am]

BILLING CODE 8010–01–M

[Rel. No. IC–21318; 812–7734]

Consulting Group Capital Markets Funds and Smith Barney Mutual Funds Management Inc.; Notice of Application

August 23, 1995.

AGENCY: Securities and Exchange Commission (''SEC'').

ACTION: Notice of Application for Exemption under the Investment Company Act of 1940 (the ''Act'').

APPLICANTS: Consulting Group Capital Markets Funds (the ''Trust''), and Smith Barney Mutual Funds Management Inc.

RELEVANT ACT SECTIONS: Exemption requested under section 6(c) of the Act from the provisions of section 15(a) and rule 18f–2; and from certain proxy disclosure requirements set forth in item 22 of Schedule 14A under the Securities Exchange Act of 1934 (the ''Exchange Act''); items 2, 5(b)(iii), and 16(a)(iii) of Form N–1A; item 3 of Form N–14; item 48 of Form N–SAR; and sections 6–07(2)(a), (b), and (c) of Regulation S–X.

SUMMARY OF APPLICATION: Applicants seek a conditional order permitting the Trust's investment adviser, The Consulting Group (a division of Smith Barney Mutual Funds Management Inc.) (the ''Manager''), to enter into sub-advisory agreements on behalf of the Trust without receiving approval by the Trust's shareholders, and permitting the Trust to disclose only aggregate sub-advisory fees for each series of the Trust in their prospectuses and other reports.

FILING DATES: The application was filed on June 6, 1991, and amended and restated on August 11, 1993, March 9, 1994, and August 23, 1995.

HEARING OR NOTIFICATION OF HEARING: An order granting the application will be issued unless the SEC orders a hearing. Interested persons may request a hearing by writing to the SEC's Secretary and serving applicants with a copy of the request, personally or by mail. Hearing requests should be received by the SEC by 5:30 p.m. on September 18, 1995, and should be accompanied by proof of service on the applicants, in the form of an affidavit or, for lawyers, a certificate of service. Hearing requests should state the nature of the writer's interest, the reason for the request, and the issues contested. Persons who wish to be notified of a hearing may request notification by writing to the SEC's Secretary.

ADDRESSES: Secretary, SEC, 450 Fifth Street, N.W., Washington, D.C. 20549. Applicant, 222 Delaware Avenue, Wilmington, Delaware 19801.

FOR FURTHER INFORMATION CONTACT: Mary Kay Frech, Senior Attorney, at (202) 942–0579, or C. David Messman, Branch Chief, at (202) 942–0564 (Division of Investment Management, Office of Investment Company Regulation).

SUPPLEMENTARY INFORMATION: The following is a summary of the application. The complete application may be obtained for a fee at the SEC's Public Reference Branch.

Applicant's Representations

1. The Trust is a registered open-end management investment company organized as a Massachusetts business trust. The Trust is a series company currently consisting of thirteen operating series (each a ''Portfolio'' and, collectively, the ''Portfolios'').[1] Shares of the Portfolios are available exclusively to participants in TRAK Personalized Investment Advisory Service (''TRAK'') and are proposed to be made available to other investment advisory services offered by qualified professional asset managers. TRAK and other investment advisory services and the Trust are designed to relieve investors of the burden of devising an asset allocation strategy to meet their individual needs as well as selecting individual investments within the available asset categories.

2. The Manager, a division of Smith Barney Mutual Funds Management Inc., is a registered investment adviser that is a wholly owned subsidiary of Smith Barney Holdings Inc., which in turn is a wholly owned subsidiary of Travelers Group Inc. The Trust has entered into an investment management agreement (the ''Management Agreement'') with the Manager who, in turn, has entered into an investment advisory agreement (''Advisory Agreement'') with one or more separate registered investment advisers (each, a ''Sub-Adviser'') to the Portfolios. It is the Manager's responsibility under the Management Agreement to select, subject to the review and approval of the board of trustees of the Trust (the ''Board''), Sub-Advisers who have distinguished themselves by able performance in their respective areas of expertise in asset management and to review their continued performance. Each Sub-Adviser's responsibilities are limited to managing the assets held by the Portfolio it serves in accordance with the Portfolio's stated investment objectives and policies.

3. Subject to the supervision and direction of the Board, the Manager provides to the Trust investment management evaluation services by performing initial due diligence on prospective Sub-Advisers for each Portfolio and thereafter monitoring Sub-Adviser performance through quantitative and qualitative analysis, as well as periodic in-person, telephonic, and written consultations with Sub-Advisers. The Manager has responsibility for communicating performance expectations and evaluations to Sub-Advisers and ultimately recommending to the Board whether Sub-Advisers' contracts should be renewed, modified, or terminated. The Manager also is responsible for conducting all operations of the Trust except those operations contracted to the Sub-Advisers or the Trust's custodian, transfer agent, or administrator. Each Portfolio pays the Manager a fee for its services, and the Manager in turn pays each Sub-Adviser a fee for the services it provides to the Portfolio.

4. Smith Barney Mutual Fund Management Inc. (''Smith Barney Mutual Fund Management'') serves as the Trust's administrator and The Boston Company Advisors, Inc. (''Boston Advisors''), a wholly owned subsidiary of The Boston Company, Inc., serves as the Trust's sub-administrator. Pursuant to its administration agreement with the Trust, Smith Barney Mutual Fund Management provides senior executive management for the Trust and generally oversees and directs all aspects of the Trust's administration and operation. Boston Advisors calculates the net asset value of the Portfolios' shares and generally assists in various aspects of the Trust's administration and operation. Each Portfolio pays Smith Barney Mutual Fund Management a fee of the services provided by it and Boston Advisors. Boston Advisors is paid a portion of this fee.

5. Purchases of shares of a Portfolio must be made through a brokerage account maintained with Smith Barney Inc. (''SB''). SB, through its Consulting Group division in its capacity as investment adviser to participants in TRAK, provides advisory services in connection with investments among the Portfolios by identifying the investor's risk tolerances and investment objectives, identifying and recommending in writing an appropriate allocation of assets among the Portfolios that conforms to those tolerances and objectives, and providing on a periodic basis a monitoring report to the investor containing an analysis and evaluation of the investor's TRAK account and recommending any appropriate changes in the allocation of assets among the Portfolios. Investors pay an annual fee for their participation in TRAK, which they may terminate at

[1] Applicants also request relief with respect to any series of the Trust organized in the future and for any open-end, management investment company advised by the Manager, or a person controlling, controlled by or under common control with the Manager, in the future, provided that such investment company operates in substantially the same manner as the Trust and complies with the conditions to the requested order.

any time. Termination of a TRAK account must be accompanied by a redemption order for all Portfolio shares held in the account.

6. Applicants request an order permitting the Manager to enter into Advisory Agreements for the Portfolios without obtaining shareholder approval, including new Advisory Agreements necessitated because a prior Advisory Agreement terminated as a result of an assignment (as defined in section 2(a)(4) of the Act). Although shareholders will not vote on Sub-Adviser changes, applicants will provide shareholders with an information statement that includes all the information about a new Sub-Adviser or Advisory Agreement that would be included in a proxy statement. The Management Agreement between the Manager and the Trust would in all cases be subject to the shareholder voting requirements of the Act.

7. Applicants propose to disclose (both as a dollar amount and as a percentage of a Portfolio's net assets) in the Trust's registration statement and other public documents only the aggregate amount of fees paid by the Manager to all the Sub-Advisers of a Portfolio (''Aggregate Fee Disclosure''). Aggregate Fee Disclosure means: (a) the total advisory fee charged by the Manager with respect to each Portfolio; (b) the aggregate fees paid by the Manager to all Sub-Advisers managing assets of each Portfolio; and (c) the net advisory fee retained by the Manager with respect to each Portfolio after the Manager pays all Sub-Advisers managing assets of the Portfolio. The ''Aggregate Fee Disclosure'' also will include separate disclosure of any fees paid to any Sub-Adviser who is an affiliated person (as defined in section 2(a)(3) of the Act) of the Trust or the Manager other than by reason of serving as a Sub-Adviser to a Portfolio (an ''Affiliated Sub-Adviser'').

Applicants' Legal Analysis

1. Section 15(a) makes it unlawful for any person to act as an investment adviser to a registered investment company except pursuant to a written contract which precisely describes all compensation to be paid thereunder and which has been approved by a majority of the investment company's outstanding securities. Rule 18f–2 provides that each series or class of stock in a series company affected by a matter must approve such matter if the Act requires shareholder approval.

2. Applicants state that primary responsibility for management of the Trust, in particular, the selection and supervision of the Sub-Advisers, is vested in the Manager, subject to oversight and approval by the Board. Applicants point out that the cover page of the Trust's prospectus makes clear that the Manager is the primary service provider to the Trust. Applicants argue that the distinctly different structure of the Trust renders the identity of a Sub-Adviser of a Portfolio less relevant to the investment decisions of shareholders of that Portfolio. Applicants believe that investors who seek the investment advice of Consulting Group or any other professional asset manager typically have determined that they are unwilling to assume the burden of selecting an appropriate mix of investment media to attain their investment objectives, let alone the appropriate money manager or managers to make specific investments in accord with those objectives.

3. Applicants also assert that the ability to enter into Advisory Agreements without shareholders approval would permit the Manager to perform to the fullest extent the principal function the Portfolios are paying it to perform—selecting Sub-Advisers, monitoring their performance, and changing Sub-Advisers when appropriate. To require that shareholders approve each new Sub-Adviser would result not only in unnecessary administrative expense to the Portfolios, but could result in harmful delays in executing changes in Sub-Advisers that the Manager and the Trustees may determine are necessary.

4. Form N–1A is the registration statement used by open-end management investment companies to register their securities under the Act and under the Securities Act of 1933 (the ''Securities Act''). Items 2, 5(b)(iii), and 16(a)((iii) of Form N–1A require the Funds to disclose in their prospectuses the investment adviser's compensation and the method of computing the advisory fee.

5. Item 3 of Form N–14, the registration form for business combinations involving mutual funds, requires the inclusion of a ''table showing the current fees for the registrant and the company being acquired and pro forma fees, if different, for the registrant after giving effect to the transaction using the format prescribed'' in item 2 of Form N–1A.

6. Rule 20a–1 under the Act requires proxies solicited with respect to an investment company to comply with Schedule 14A under the Exchange Act. Item 22 of Schedule 14A sets forth the requirements concerning the information that must be included in a proxy statement. Item 22(a)(3)(iv) requires a proxy statement for a shareholder meeting at which a new fee will be established or an existing fee increased to include a table of the current and pro forma fees using the format prescribed in item 2 of Form N–1A. Items 22(c)(1)(ii), 22(c)(1)(iii), 22(c)(8), and 22(c)(9), taken together, require that a proxy statement for a shareholder meeting at which an advisory contract is to be voted upon shall include the ''rate of compensation of the investment adviser,'' the ''aggregate amount of the investment adviser's fee,'' the ''terms of the contract to be acted upon,'' and, if a change in fees is proposed, the existing and proposed rate schedule for advisory fees paid to their advisers, including the Sub-Advisers.

7. Form N–SAR is the semi-annual report filed with the SEC by registered investment companies. Item 48 of Form N–SAR provides that the Trust must disclose the rate schedule for advisory fees paid to their advisers, including the Sub-Advisers.

8. Regulation S–X sets forth the requirements for financial statements required to be included as part of the registration statements and shareholders reports filed with the SEC under the Act and under the Securities Act. Items 6–07(2)(a), (b), and (c) of Regulation S–X require that the Trust's financial statements contain information concerning fees paid to the Sub-Advisers.

9. Applicants state that all shareholders of the Trust will be fully advised of the fees charged by the Manager for its management services because these fees will be disclosed in the Trust's prospectus. The fees paid to the Manager reflect the total costs and expenses (including Sub-Advisers' compensation) to the Manager for managing the Trust's businesses. In addition, all Trust shareholders will be advised of the aggregate fees paid by the Manager to all Sub-Advisers of a Portfolio through the Aggregate Fee Disclosure. Applicants assert that the management fee paid to the Manager will be negotiated by the Portfolio with the expectation that the Manager will seek to pay the lowest appropriate advisory fee to the Sub-Advisers. Applicants argue that disclosing individual Sub-Adviser fees may inhibit or eliminate the Manager's ability to negotiate fees below the ''posted'' fee rates. Applicants maintain that any advantage that the Manager would gain in negotiating fee arrangements with Sub-Advisers would inure ultimately to the benefit of the shareholders of the Portfolios because it would be possible for the Manager to pass the benefits of a lower sub-advisory fee on to the

Portfolios, although the Manager is not legally or contractually obligated to do so.[2] They also submit that the nondisclosure of individual Sub-Adviser's fees is in the best interest of the Portfolios and their shareholders, because such disclosure would increase costs to shareholders without an offsetting benefit.

10. Applicants assert that because all shareholders of the Trust will be fully advised of the fees charged by the Manager for its management services (which include compensating the Sub-Advisers), each shareholder will have the information to determine whether, in its judgment, the total package of services is priced reasonably in relation to the services and costs that the investor could obtain elsewhere. Moreover, applicants believe that the Aggregate Fee Disclosure will provide shareholders with sufficient and clear information to determine whether they are receiving good value from the Manager and the Sub-Advisers and whether to redeem their shares if dissatisfied with the level of performance for the price paid.

11. Section 6(c) authorizes the Commission to exempt persons or transactions from the provisions of the Act to the extent that such exemptions are appropriate in the public interest and consistent with the protection of investors and the purposes fairly intended by the policies and provisions of the Act. Applicants assert that their request satisfies these standards.

Applicants' Conditions

Applicants agree that the following conditions may be imposed in any order of the Commission granting the requested relief:

1. The Manager will provide general management and, alone or together with Smith Barney Mutual Funds Management and Boston Advisors, administrative services to the Trust, including overall supervisory responsibility for the general management and investment of the Trust's securities portfolio, and, subject to review and approval by the Board, will: (a) set the Portfolios' overall investment strategies; (b) select Sub-Advisers; (c) monitor and evaluate the performance of Sub-Advisers; (d) allocate and, when appropriate, reallocate a Portfolio's assets among its Sub-Advisers in those cases where a Portfolio has more than one Sub-Adviser; and (e) implement procedures reasonably designed to ensure that the Sub-Advisers comply with the Trust's investment objectives, policies, and restrictions.

2. Before a Portfolio may rely on the order requested hereby, the operation of the Portfolio in the manner described in the application will be approved by a majority of its outstanding voting securities, as defined in the Act, or, in the case of a new Portfolio whose public shareholders purchased shares on the basis of a prospectus containing the disclosure contemplated by condition 4 below, by the sole stockholder before offering of shares of such Portfolio to the public.

3. The Trust will furnish to shareholders all information about a new Sub-Adviser or Advisory Agreement that would be included in a proxy statement, except as modified by the order with respect to the disclosure of fees paid to the Sub-Advisers. Such information will include Aggregate Fee Disclosure and any change in such disclosure caused by the addition of a new Sub-Adviser or any proposed material change in a Portfolio's Advisory Agreement. The Trust will meet this condition by providing shareholders with an informal information statement complying with the provisions of Regulation 14C and Schedule 14C under the Exchange Act. With respect to a newly retained Sub-Adviser, or a change in an Advisory Agreement, this information statement will be provided to shareholders of the Portfolio a maximum of 90 days after the addition of the new Sub-Adviser or the implementation of any change in an Advisory Agreement. The information statement will also meet the requirements of Schedule 14A, except as modified by the order with respect to the disclosure of fees paid to the Sub-Advisers.

4. The Trust will disclose in its prospectus the existence, substance, and effect of the order granted pursuant to the application.

5. No Trustee or officer of the Trust or director or officer of the Manager will own directly or indirectly (other than through a pooled investment vehicle that is not controlled by such director, trustee, or officer) any interest in any Sub-Adviser except for: (a) ownership of interests in the Manager or any entity that controls, is controlled by, or is under common control with the Manager; or (b) ownership of less than 1% of the outstanding securities of any class of equity or debt of a publicly-traded company that is either a Sub-Adviser or an entity that controls, is controlled by, or is under common control with a Sub-Adviser.

6. Shares of the Trust will be offered exclusively to participants in TRAK and other asset allocation services offered by professional asset managers who, for compensation, engage in the business of advising others as to the value of securities or as to the advisability of investing in, purchasing or selling securities.

7. The Trust will disclose in its registration statement the Aggregate Fee Disclosure.

8. The Manager will not enter into an Advisory Agreement with any Affiliated Sub-Adviser without such agreement, including the compensation to be paid thereunder, being approved by the shareholders of the applicable Portfolio.

9. At all times, a majority of the members of the Board will be persons each of whom is not an ''interested person'' of the Trust as defined in section 2(a)(19) of the Act (''Independent Trustees''), and the nomination of new or additional Independent Trustees will be placed within the discretion of the then existing Independent Trustees.

10. Independent counsel knowledgeable about the Act and the duties of Independent Trustees will be engaged to represent the Independent Trustees. The selection of such counsel will be placed within the discretion of the then existing Independent Trustees.

11. The Manager will provide the Board, no less frequently than quarterly, information about the Manager's profitability on a per-Portfolio basis. Such information will reflect the impact on profitability of the hiring or termination of any Sub-Adviser during the applicable quarter.

12. Whenever a Sub-Adviser is hired or terminated, the Manager will provide the Board information showing the expected impact on the Manager's profitability.

13. When a Sub-Adviser change is proposed for a Portfolio with an Affiliated Sub-Adviser, the Board, including a majority of the Independent Trustees, will make a separate finding, reflected in the Board's minutes, that such change is in the best interests of the Portfolio and its shareholders and does not involve a conflict of interest from which the Manager or the Affiliated Sub-Adviser derives an inappropriate advantage.

[2] The Board, including the Independent Trustees, would be required to take the amounts paid by the Manager to the Sub-Advisers into account when assessing the profitability of the advisory arrangements to the Manager during the course of their annual review of the Trust's management and sub-advisory arrangements under sections 15 and 36(b) of the Act.

For the SEC, by the Division of Investment Management, under delegated authority.

Margaret H. McFarland,

Deputy Secretary.

[FR Doc. 95–21361 Filed 8–28–95; 8:45 am]

BILLING CODE 8010–01–M

[Rel. No. IC–21319; 811–4810]

Franklin Pennsylvania Investors Fund; Notice of Application for Deregistration

August 23, 1995.

AGENCY: Securities and Exchange Commission (''SEC'').

ACTION: Notice of Application for Deregistration under the Investment Company Act of 1940 (the ''Act'').

APPLICANT: Franklin Pennsylvania Investors Fund.

RELEVANT ACT SECTION: Section 8(f).

SUMMARY OF APPLICATION: Applicant seeks an order declaring that it has ceased to be an investment company.

FILING DATES: The application was filed on October 5, 1994 and amended on August 10, 1995.

HEARING OR NOTIFICATION OF HEARING: An order granting the application will be issued unless the SEC orders a hearing. Interested persons may request a hearing by writing to the SEC's Secretary and serving applicant with a copy of the request, personally or by mail. Hearing requests should be received by the SEC by 5:30 p.m. on September 18, 1995, and should be accompanied by proof of service on applicant, in the form of an affidavit or, for lawyers, a certificate of service. Hearing requests should state the nature of the writer's interest, the reason for the request, and the issues contested. Persons who wish to be notified of a hearing may request notification by writing to the SEC's Secretary.

ADDRESSES: Secretary, SEC, 450 Fifth Street, N.W., Washington, D.C. 20549. Applicant, 777 Mariners Island Blvd., San Mateo, California 94404.

FOR FURTHER INFORMATION CONTACT: Marc Duffy, Senior Attorney, (202) 942–0565, or C. David Messman, Branch Chief, (202) 942–0564 (Division of Investment Management, Office of Investment Company Regulation).

SUPPLEMENTARY INFORMATION: The following is a summary of the application. The complete application may be obtained for a fee from the SEC's Public Reference Branch.

Applicant's Representations

1. Applicant is an open-end diversified management investment company that was organized as a California corporation. On August 20, 1986, applicant registered as an investment company under section 8(a) of the Act and filed a registration statement relating to its shares under section 8(b) of the Act and the Securities Act of 1933. The registration statement was declared effective on October 1, 1986, and applicant commenced its initial public offering on that date.

2. At meetings held on March 16, 1993 and May 18, 1993, applicant's Board of Directors approved a plan of reorganization whereby the U.S. Government Series (the ''USG Series'') of the Franklin Custodian Funds, Inc. (the ''Franklin Fund'') would acquire substantially all of applicant's assets (subject to stated liabilities) in exchange for shares of common stock of the USG Series. Applicant's Board of Directors determined that the reorganization could benefit applicant's shareholders by allowing them to achieve their investment goals in a larger fund while obtaining the benefits of economies of scale.

3. In accordance with rule 17a–8 under the Act, applicant's Board of Directors determined that the sale of applicant's assets to the Franklin Fund was in the best interest of applicant's shareholders, and that the interests of the existing shareholders would not be diluted as a result.[1]

4. On May 19, 1993, Franklin Fund filed a registration statement on Form N–14, which contained proxy materials soliciting the approval of the reorganization by applicant's shareholders. On or about July 2, 1993, proxy materials were distributed to each of applicant's shareholders. At a special meeting held on August 30, 1993, holders of a majority of the outstanding voting shares of applicant approved the reorganization.

5. On August 30, 1993, applicant had 961,198 shares of common stock outstanding with a net asset value of $10.32 per share and an aggregate net asset value of $9,919,863.

6. Pursuant to the reorganization, on August 30, 1993, applicant transferred substantially all of its assets to the USG Series in exchange for shares of common stock of the USG Series having an aggregate net asset value equal to the aggregate value of net assets so transferred. Shares of the USG Series were distributed to applicant's shareholders *pro rata* in accordance with their respective interests in applicant.

7. The expenses related to the reorganization totaled approximately $11,500. These expenses included legal and audit fees and the expenses of printing, typesetting, and mailing proxy statements and related documents. Such expenses were borne by Franklin Advisers, Inc., applicant's investment adviser.

8. At the time of filing of the application, applicant had no assets or liabilities. Applicant has no shareholders and is not a party to any litigation or administrative proceedings. Applicant is not engaged in, and does not propose to engage in, any business activities other than those necessary for the winding up of its affairs.

9. On October 11, 1994, applicant filed a Certificate of Dissolution with the California Secretary of State. On December 28, 1994, applicant ceased its corporate existence in the State of California.

[1] Applicant and Franklin Fund may be deemed to be affiliated persons of each other by reason of having a common investment adviser, common directors, and common officers. Although purchases and sales between affiliated persons generally are prohibited by section 17(a) of the Act, rule 17a–8 provides an exemption for certain purchases and sales among investment companies that are affiliated persons of one another solely by reason of having a common investment adviser, common directors, and/or common officers.

For the SEC, by the Division of Investment Management, under delegated authority.

Margaret H. McFarland,

Deputy Secretary.

[FR Doc. 95–21360 Filed 8–28–95; 8:45 am]

BILLING CODE 8010–01–M

[File No. 1–13048]

Issuer Delisting; Notice of Application to Withdraw from Listing and Registration; (Healthy Planet Products, Inc., Common Stock, $.01 Par Value)

August 22, 1995.

Healthy Planet Products, Inc. (''Company'') has filed an application with the Securities and Exchange Commission (''Commission''), pursuant to Section 12(d) of the Securities Exchange Act of 1934 (''Act'') and Rule 12d2–2(d) promulgated thereunder, to withdraw the above specified security (''Security'') from listing and registration on the Pacific Stock Exchange, Incorporated (''PSE'').

The reasons alleged in the application for withdrawing the Security from listing and registration include the following:

According to the Company, the decision to delist from the PSE has been occasioned by reason of the Company's listing on the American Stock Exchange, Inc., which has now become the principal market for the Security. Obviously, Amex quotations are readily available to the public from various media and sources, and there appears to

be no continuing benefit to either the Company or its shareholders for the continued listing PSE. In addition, the delisting from the PSE will save the Company duplicate ongoing listing fees.

Any interested person may, on or before September 13, 1995, submit by letter to the Secretary of the Securities and Exchange Commission, 450 Fifth Street N.W., Washington, DC 20549, facts bearing upon whether the application has been made in accordance with the rules of the exchanges and what terms, if any, should be imposed by the Commission for the protection of investors. The Commission, based on the information submitted to it, will issue an order granting the application after the date mentioned above, unless the Commission determines to order a hearing on the matter.

For the Commission, by the Division of Market Regulation, pursuant to delegated authority.

Jonathan G. Katz,

Secretary.

[FR Doc. 95–21331 Filed 8–28–95; 8:45 am]

BILLING CODE 8010–01–M

[Rel. No. IC–21317; File No. 812–9452]

Metropolitan Life Insurance Company, et al.

August 22, 1995.

AGENCY: Securities and Exchange Commission (''SEC'' or ''Commission'').

ACTION: Notice of Application for an Order under the Investment Company Act of 1940 (''1940 Act'').

APPLICANTS: Metropolitan Life Insurance Company (''Metropolitan Life'') and Metropolitan Life Separate Account UL (''Account UL'').[1]

RELEVANT 1940 ACT SECTION: Order requested under Section 6(c) granting exemptions from the provisions of Section 27(c)(2) of the 1940 Act and from paragraph (c)(4)(v) of Rule 6e–2 and of Rule 6e–3(T) under the 1940 Act.

SUMMARY OF APPLICATION: Applicants seek an order to permit Metropolitan Life to deduct from premium payments received under certain individual variable life insurance policies issued by Account UL (the ''Account Policies''), or any other variable life insurance policies (''Future Policies'') issued by Account UL or any other separate account established by Metropolitan Life in the future to support scheduled premium, single premium or flexible premium variable life insurance policies (''Future Accounts''), an amount that is reasonable in relation to the increased federal income tax burden of Metropolitan Life resulting from the receipt of such premiums in connection with the Account Policies or Future Policies (together, the ''Policies''). The deduction would not be treated as sales load.

FILING DATE: The application was filed on January 24, 1995. An amendment was filed on August 10, 1995.

HEARING OR NOTIFICATION OF HEARING: An order granting the application will be issued unless the Commission orders a hearing. Interested persons may request a hearing by writing to the Secretary of the Commission and serving Applicants with a copy of the request, personally or by mail. Hearing requests should be received by the Commission by 5:30 p.m. on September 18, 1995, and should be accompanied by proof of service on Applicants in the form of an affidavit or, for lawyers, a certificate of service. Hearing requests should state the nature of the writer's interest, the reason for the request, and the issues contested. Persons may request notification of a hearing by writing to the Secretary of the Commission.

ADDRESSES: Secretary, Securities and Exchange Commission, 450 5th Street, N.W., Washington, DC 20549. Applicants, Christopher P. Nicholas, Esquire, Associate General Counsel, Metropolitan Life Insurance Company, One Madison Avenue, New York, NY 10010.

FOR FURTHER INFORMATION CONTACT: Mark C. Amorosi, Attorney, or Patrice M. Pitts, Special Counsel, Office of Insurance Products (Division of Investment Management), at (202) 942–0670.

SUPPLEMENTARY INFORMATION: The following is a summary of the application; the complete application is available for a fee from the Public Reference Branch of the Commission.

Applicants' Representations

1. Metropolitan Life, a mutual life insurance company organized under the laws of New York in 1868, is authorized to conduct business in all 50 states, the District of Columbia, Puerto Rico and all provinces of Canada. Metropolitan Life is registered as a broker-dealer under the Securities Exchange Act of 1934, and will serve as the principal underwriter for Account UL.

2. Account UL is a separate account established by Metropolitan Life and registered as a unit investment trust under the 1940 Act. Account UL has seven divisions, each of which invests in a corresponding portfolio of the Metropolitan Series Fund, Inc. (the ''fund''). Account UL is, and any Future Account will be, used to fund the Policies issued in reliance on the applicable provisions of either Rule 6e–2 or Rule 6e–3(T) of the 1940 Act. All income, gains and losses, whether or not realized, from assets allocated to Account UL or any Future Account will be credited to or charged against Account UL or the respective Future Account without regard to other income, gains or losses of Metropolitan Life.

3. Metropolitan Life will deduct a charge of 1.25% (0.35% for group contracts) of each gross premium payment under the Policies to cover Metropolitan Life's estimated cost for the federal income tax treatment of deferred acquisition costs resulting from changes made to the Internal Revenue Code of 1986 (''Code'') by the Omnibus Budget Reconciliation Act of 1990 (''OBRA 1990'').

4. OBRA 1990 amended the Code by, among other things, enacting Section 848 thereof which requires life insurance companies to capitalize and amortize over a period of ten years part of their general expenses for the current year. Prior law allowed these expenses to be deducted in full from the current year's gross income. Section 848 effectively accelerates the realization of income from insurance contracts covered by that Section and, thus, the payment of taxes on that income. Taking into account the time value of money, Section 848 increases the insurance company's tax burden because the amount of general deductions that must be capitalized and amortized is measured by the premiums received under the Policies.

5. The amount of deductions which must be amortized over ten years pursuant to Section 848 equals a percentage of the current year's ''net premiums'' received (*i.e.*, gross premiums minus return premiums and reinsurance premiums) under life insurance or other contracts as categorized under Section 848.[2] The

---

[1] Applicants have represented that they will file an amendment to the application during the notice period to revise the list of applicants.

[2] While it has no current intention to do so, Metropolitan Life could, in the future, reinsure risks under Policies with another insurance company. Whether a reinsurance agreement will increase or decrease Metropolitan Life's net premiums against which the capitalization percentage in Section 848(d) would be applied depends on the net consideration annually flowing between Metropolitan Life and the reinsurer under the agreement. Metropolitan Life states that it has established the level of its deduction for the increased federal tax liability resulting from Section 848 without regard to the possibility that if any Policies are ever reinsured, such reinsurance could

Policies will be categorized under Section 848 as ''specified insurance contracts.'' Consequently, 7.7% (2.05% for group policies) of the net premiums received must be capitalized and amortized under the schedule set forth in Section 848(c)(1) of the Code.

6. Applicants quantify the increased tax burden on every $10,000 of net premiums received for individual Policies as follows: For each $10,000 of net premiums received by Metropolitan Life under the individual Policies in a given year, Section 848 requires Metropolitan Life to capitalize $770 (i.e., 7.7% of $10,000), $38.50 of which amount may be deducted in the current year. The remaining $731.50 ($770 less $38.50), which is subject to taxation at the corporate tax rate of 35%, results in Metropolitan Life owing $256.03 (.35% × $731.50) more in taxes for the current year than it otherwise would have owed prior to the enactment of OBRA 1990. The current tax increase, however, will be partially offset by deductions that will be allowed during the next ten years as a result of amortizing the remainder of the $770 ($77 in each of the following nine years and $38.50 in year ten).

7. Capital that Metropolitan Life must use to pay its increased federal income tax burden under Section 848 will be unavailable for investment. Applicants submit that the cost of capital used to satisfy this increased tax burden will be essentially Metropolitan Life's targeted after-tax rate of return (i.e., the return sought on invested capital), 9.75%.[3] Accordingly, Applicants submit that a discount rate of 9.75% is appropriate for use by Metropolitan Life in evaluating the present value of its future tax deductions resulting from the amortization described above. Applicants state that to the extent that the 9.75% discount rate is lower than Metropolitan Life's actual targeted rate of return, the calculation of this increased tax burden will continue to be reasonable over time, even if the corporate tax rate applicable to Metropolitan Life is reduced, or its targeted rate of return is lowered.

8. Using a federal corporate tax rate of 35%, and assuming a discount rate of 9.75%, the present value of the tax effect of the increased deductions allowable in the following ten years, which partially offsets the increased tax burden, comes to $162.07. The effect of Section 848 on the Policies is, therefore, an increased tax burden with a present value of $93.96 for each $10,000 of net premiums (i.e., $256.03 less $162.07).

9. Metropolitan Life does not incur incremental federal income tax when it passes on state premium taxes to Policy owners because state premium taxes are deductible in computing federal income taxes. In contrast, federal income taxes are not so deductible. To compensate itself fully for the impact of Section 848, Metropolitan Life must impose an additional charge to make it whole not only for the $93.96 additional tax burden attributable to Section 848, but also for the tax on the additional $93.96 itself. This federal tax can be determined by dividing $93.96 by the complement of the 35% federal corporate income tax rate (i.e., 65%), resulting in an additional charge of $114.55 for each $10,000 of net premiums, or 1.45%.[4]

10. Based on its prior experience, Metropolitan Life expects that all of its current and future deductions will be fully utilized. It is Metropolitan Life's judgement that a 1.25% (0.35% for group policies) charge would reimburse it for its increased federal income tax liabilities under Section 848. Applicants represent that the 1.25% (0.35% for group policies) charge will be reasonably related to Metropolitan Life's increased federal income tax burden under Section 848. This representation takes into account the benefit to Metropolitan Life of the amortization permitted by Section 848 and the use of a 9.75% discount rate (which is equivalent to Metropolitan Life's targeted after-tax rate of return) in computing the future deductions resulting from such amortization. Metropolitan Life believes that the 1.25% (0.35% for group policies) charge would have to be increased if future changes in, or interpretations of, Section 848 or any successor provision result in a further increased tax burden resulting from receipt of premiums. The increase could be caused by a change in the corporate tax rate, or in the 7.7% (2.05% for group policies) figure, or in the amortization period.

Applicant's Legal Analysis

1. Applicants request an order of the Commission pursuant to Section 6(c) exempting them from the provisions of Section 27(c)(2) of the 1940 Act, and Rules 6e–2(c)(4)(v) and 6e–3(T)(c)(4)(v) thereunder, to the extent necessary to permit deductions to be made from premium payments received in connection with the Policies. The deductions would be in an amount that is reasonable in relation to the increased federal income tax burden related to the receipt of such premiums. Applicants further request an exemption from Rules 6e–2(c)(4) and 6e–3(T)(c)(4) under the 1940 Act to permit the proposed deductions to be treated as other than sales load for the purposes of Section 27 of the 1940 Act and the exemptions from that Section found in Rules 6e–2 and 6e–3(T).

2. Section 6(c) of the 1940 Act provides, in pertinent part, that the Commission may, by order upon application, conditionally or unconditionally exempt any person, security or transaction from any provision of the 1940 Act if and to the extent that such exemption is necessary or appropriate in the public interest and consistent with the protection of investors and the purposes fairly intended by the policy and the provisions of the 1940 Act.

3. Section 27(c)(2) of the 1940 Act prohibits the sale of periodic payment plan certificates unless the proceeds of all payments (except such amounts as are deducted for sales load) are held under an indenture or agreement containing in substance the provisions required by Sections 26(a)(2) and 26(a)(3) of the 1940 Act. Certain provisions of Rules 6e–2 and 6e–3(T) provide a range of exemptive relief for the offering of variable life insurance

decrease or increase the economic impact of the deferred acquisition cost on Metropolitan Life. Consistent with the conditions for relief, in the event that Metropolitan Life enters into any reinsurance agreements, Metropolitan Life states that it will monitor the reasonableness of its deduction over time based on its experience under the reinsurance agreements.

[3] In determining the targeted after-tax rate of return used in arriving at the discount rate, Metropolitan Life considered a number of factors, including: current market interest rates, inflation, the company's anticipated long-term growth rate, the risk level that is acceptable to the company, expected future interest rate trends, the surplus level required by rating agencies for their top ratings and available information about rates of return obtained by other life insurance companies.

Applicants state that Metropolitan Life first projects its future growth rate based on sales projections, the current interest rates, the inflation rate, and the amount of surplus that Metropolitan Life can provide to support such growth. Metropolitan Life then uses the anticipated growth rate and the other factors cited above to set a rate of return on surplus that equals or exceeds this rate of growth. Of these other factors, market interest rates, the acceptable risk level and the inflation rate receive significantly more weight than information about the rates of return obtained by other companies. Applicants state that Metropolitan Life seeks to maintain a ratio of surplus to assets that it establishes based on its judgement of the risks represented by various components of its assets and liabilities. Applicants state that maintaining the ratio of surplus to assets is critical to offering competitively priced products and, as to Metropolitan Life, to maintaining a competitive rating from various rating agencies. Consequently, Applicants state that Metropolitan Life's surplus should grow at least at the same rate as do its assets.

[4] For group life insurance contracts, the total charge necessary to make Metropolitan Life whole would be 0.38%, an amount calculated using this same methodology but substituting the group life insurance capitalization rate of 2.05% for the 7.7% rate used above.

policies such as the Policies, including limited relief from Section 27(c)(2).

4. Rule 6e–2(c)(4)(v) defines ''sales load'' charged on any payment as the excess of the payment over certain specified charges and adjustments, including ''a deduction approximately equal to state premium taxes.'' Rule 6e–3(T)(c)(4)(v) defines ''sales load'' charged during a contract period as the excess of any payments made during the period over the sum of certain specified charges and adjustments, including ''a deduction for and approximately equal to state premium taxes.''

5. Applicants submit that, for purposes of the 1940 Act and the Rules thereunder, the deduction for federal income tax charges proposed to be deducted in connection with the Policies should be treated as other than sales load, as is a state premium tax charge.

6. Applicants maintain that the requested exemptions from Rules 6e–2(c)(4) and 6e–3(T)(c)(4) are necessary in connection with Applicants' reliance on certain provisions of Rules 6e–2(b)(13) and 6e–3(T)(b)(13), which provide exemptions from Sections 27(a)(1) and 27(h)(1) of the 1940 Act. Issuers may only rely on Rules 6e–2(b)(13)(i) or 6e–3(T)(b)(13)(i) if they meet the respective Rule's alternative limitations on sales load as defined in Rule 6e–2(c)(4) or Rule 6e–3(T)(c)(4). Applicants state that, depending upon the load structure of a particular Policy, these alternative limitations may not be met if the deduction for the increase in an issuer's federal tax burden is included in sales load. Although a deduction for an insurance company's increased federal tax burden does not fall squarely within any of the specified charges or adjustments which are excluded from the definition of ''sales load'' in Rules 6e–2(c)(4) and 6e–3(T)(c)(4), Applicants state that they have found no public policy reason for including them in ''sales load.''

7. The public policy that underlies Rules 6e–2(b)(13)(i) and 6e–3(T)(b)(13)(i), like that which underlies Sections 27(a)(1) and 27(h)(1) of the 1940 Act, is to prevent excessive sales loads from being charged in connection with the sale of periodic payment plan certificates. Applicants submit that the treatment of a federal income tax charge attributable to premium payments as sales load would not further this legislative purpose because such a deduction has no relation to the payment of sales commissions or other distribution expenses. Applicants state that the Commission has concurred with this conclusion by excluding deductions for state premium taxes from the definition of ''sales load'' in Rules 6e–2(c)(4) and 6e–3(T)(c)(4).

8. Applicants assert that the source for the definition of ''sales load'' found in the Rules supports this analysis. Applicants state that the Commission's intent in adopting such provisions was to tailor the general terms of Section 2(a)(35) of the 1940 Act to variable life insurance contracts. Section 2(a)(35) excludes deductions from premiums for ''issue taxes'' from the definition of ''sales load'' under the 1940 Act. Applicants submit that this suggests that it is consistent with the policies of the 1940 Act to exclude from the definition of ''sales load'' in Rules 6e–2 and 6e–3(T) deductions made to pay an insurance company's costs attributable to its tax obligations.

9. Section 2(a)(35) also excludes administrative expenses or fees that are ''not properly chargeable to sales or promotional activities.'' Applicants maintain that this suggests that the only deductions intended to fall within the definition of ''sales load'' are those that are properly chargeable to such activities. Applicants submit that because the proposed deductions will be used to compensate Metropolitan Life for its increased federal income tax burden attributable to the receipt of premiums and are not properly chargeable to sales or promotional activities, the language in Section 2(a)(35) is another indication that not treating such deductions as ''sales load'' is consistent with the policies of the 1940 Act.

10. Applicants assert that the terms of the relief requested with respect to Policies to be issued through Account UL or through Future Accounts are consistent with the standards enumerated in Section 6(c) of the 1940 Act. Without the requested relief, Applicants would have to request and obtain exemptive relief for each Future Policy. Applicants state that such additional requests for exemptive relief would present no issues under the 1940 Act not already addressed in this request for exemptive relief.

11. Applicants assert that the requested relief is appropriate in the public interest because it would promote competitiveness in the variable life insurance market by eliminating the need for Applicants to file redundant exemptive applications, thereby reducing administrative expenses and maximizing efficient use of resources. The delay and expense involved in having to seek repeated exemptive relief would impair the ability of Applicants to take advantage fully of business opportunities as those opportunities arise.

12. Applicants state that the requested relief is consistent with the purposes of the 1940 Act and the protection of investors for the same reasons. If Applicants were required to seek exemptive relief repeatedly with respect to the same issues addressed in this application, investors would not receive any benefit or additional protection thereby and might be disadvantaged as a result of increased overhead expenses for Applicants.

Conditions for Relief

1. Applicants represent that Metropolitan Life will monitor the reasonableness of the charge to be deducted pursuant to the requested exemptive relief.

2. Applicants represent that the registration statement for each Policy under which the charge referenced in paragraph one of this section is deducted will: (i) disclose the charge; (ii) explain the purpose of the charge; and (iii) state that the charge is reasonable in relation to the increased federal income tax burden under Section 848 of the Code resulting from the receipt of premiums.

3. Applicants represent that the registration statement for each Policy under which the charge referenced in paragraph one of this section is deducted will contain as an exhibit an actuarial opinion as to: (i) The reasonableness of the charge in relation to the increased federal income tax burden under Section 848 resulting from the receipt of premiums; (ii) the reasonableness of the after tax rate of return that is used in calculating such charge; and (iii) the appropriateness of the factors taken into account in determining the after tax rate of return.

4. Applicants represent that Metropolitan Life will not rely on any exemptive relief granted pursuant to this application to impose a charge in excess of 1.25% of premiums, if any such excess over 1.25%, expressed as a percentage of premiums, exceeds the amount, also expressed as a percentage of premiums, necessary to make Metropolitan Life whole from any additional tax burden that results from any change in the Code or regulations thereunder that increases (a) the current 35% maximum corporate income tax rate applicable to Metropolitan Life, (b) the percentage of Metropolitan Life's premiums that must be treated as deferred expenses under the Code, or (c) the period of time over which such expenses must be amortized. For purposes of calculating, as a percentage of premiums, the additional tax burden on Metropolitan Life resulting from any such change, Applicants represent that

Metropolitan Life will use the same methodology and assumptions as are set forth in the application for calculating its tax burden under the current tax law and regulations. Applicants also represent that even if the charge is increased to more than 1.25% without obtaining additional exemptive relief, the overall rate of the charge will continue to be subject to the above conditions.

Conclusion

Applicants submit that, for the reasons and upon the facts set forth above, the requested exemptions from Section 27(c)(2) of the 1940 Act and Rules 6e–2(c)(4)(v) and 6e–3(T)(c)(v) thereunder to permit the deduction of up to 1.25% of premium payments under the Policies, without treating such deduction as sales load, meet the standards in Section 6(c) of the 1940 Act. In this regard, Applicants assert that granting the relief requested in the application would be appropriate in the public interest and consistent with the protection of investors and the purposes fairly intended by the policy and provisions of the 1940 Act.

For the Commission, by the Division of Investment Management, pursuant to delegated authority.

Margaret H. McFarland,

Deputy Secretary.

[FR Doc. 95–21330 Filed 8–28–95; 8:45 am]

BILLING CODE 8010–01–M

[File No. 1–13074]

Issuer Delisting; Notice of Application to Withdraw from Listing and Registration; (Sterling Healthcare Group, Inc., Common Stock, $.0001 Par Value)

August 22, 1995.

Sterling Healthcare Group, Inc., (''Company'') has filed an application with the Securities and Exchange Commission (''Commission'') pursuant to Section 12(d) of the Securities Exchange Act of 1934 (''Act'') and Rule 12d2–2(d) promulgated thereunder, to withdraw the above specified security (''Security'') from listing and registration on the American Stock Exchange, Inc. (''Amex'').

The reasons alleged in the application for withdrawing the Security from listing and registration include the following:

According to the Company, its Board of Directors (''Board'') approved resolutions on June 2, 1995 to withdraw the Company's Security from listing on the Amex and, instead, list such Security on the National Association of Securities Dealers Automated Quotations National Market System (''Nasdaq/NMS''). The decision of the Board followed a lengthy study of the matter and was based upon the belief that listing the Security on the Nasdaq/NMS will be more beneficial to the Company's shareholders than the present listing on the Amex because the Company believes an increased number of trading firms will begin to trade and market the Company's securities.

Any interested person may, on or before September 13, 1995 submit by letter to the Secretary of the Securities and Exchange Commission, 450 Fifth Street, N.W., Washington, D.C. 20549, facts bearing upon whether the application has been made in accordance with the rules of the exchanges and what terms, if any, should be imposed by the Commission for the protection of investors. The Commission, based on the information submitted to it, will issue an order granting the application after the date mentioned above, unless the Commission determines to order a hearing on the matter.

For the Commission, by the Division of Market Regulation, pursuant to delegated authority.

Jonathan G. Katz,

Secretary.

[FR Doc. 95–21332 Filed 8–28–95; 8:45 am]

BILLING CODE 8010–01–M

[Release No. 34–36130; File No. SR–Amex–95–05]

Self-Regulatory Organizations; Order Approving a Proposed Rule Change and Amendment No. 1 to the Proposed Rule Change and Notice of Filing and Order Granting Accelerated Approval of Amendment No. 2 to the Proposed Rule Change by the American Stock Exchange, Inc. Relating to the Listing and Trading of Indexed Term Notes Linked to the Real Estate Index

August 22, 1995.

On February 16, 1995, the American Stock Exchange, Inc. (''Amex'' or ''Exchange'') submitted to the Securities and Exchange Commission (''Commission''), pursuant to Section 19(b) of the Securities Exchange Act of 1934 (''Act''),[1] and Rule 19b–4 thereunder,[2] a proposed rule change to list and trade indexed term notes (''Notes''), the return on which is based in whole or in part on changes in value of the Real Estate Index (''Index''), a new index designed to reflect general movements in the underlying market for commercial real estate. On April 4, 1995, the Exchange filed Amendment No. 1 to the proposal.[3] Notice of the proposal and Amendment No. 1 appeared in the **Federal Register** on May 4, 1995.[4] No comment letters were received on the proposal. The Exchange filed Amendment No. 2 to the proposed rule change on August 10, 1995.[5] This order approves the Amex proposal, as amended.

Under Section 107 of the Amex Company Guide (''Guide''), the Exchange may approve for listing and trading securities that cannot be readily categorized under the listing criteria for common and preferred stocks, bonds, debentures, or warrants.[6] The Amex now proposes to list for trading, under Section 107A of the Guide, Notes whose value is based in whole or in part on changes in the value of the Index. The Index has been designed to fluctuate based on changes in the level of the underlying market for commercial real estate by combining the performance of two separate equity indexes—one comprised entirely of large actively traded real estate investment trusts (''REITS''), *i.e.,* the REIT50 Index, and the other a broad-based index of small capitalization stocks, *i.e.,* the Russell 2000 index. The Exchange believes that by subtracting a percentage of the returns associated with a broad-based small capitalization stock index (such as the Russell 2000 Index) from the returns generated by an index of REITs, an index can be generated that more

[1] 15 U.S.C. 78s(b)(1) (1988).

[2] 17 CFR 240.19b–4 (1994).

[3] In Amendment No. 1, the Exchange: (1) clarified the name of the Real Estate Index; (2) specified that the Real Estate Index will be initialized at a value of 100; and (3) amended the formula for calculating the value of the Real Estate Index. *See* Letter from Claire McGrath, Managing Director and Special Counsel, Amex, to Michael Walinskas, Branch Chief, Office of Market Supervision (''OMS''), Division of Market Regulation (''Division''), Commission, dated April 4, 1995.

[4] *See* Securities Exchange Act Release No. 35651 (April 27, 1995), 60 FR 22084.

[5] In Amendment No. 2, the Exchange amended the proposal to provide that: (1) the value of the REIT50 Index (as defined herein) will only be calculated and disseminated once per day; (2) all components of the REIT50 Index are and will continue to be ''reported securities,'' as defined in Rule 11Aa3–1 of the Act, that are traded on the Amex, New York Stock Exchange (''NYSE''), or are National Market securities traded through Nasdaq; and (3) the volume maintenance criteria for the REIT50 Index will be changed to require an average monthly trading volume of 400,000 shares over the prior three months instead of the six month period originally proposed. *See* Letter from Claire McGrath, Managing Director and Special Counsel, Derivative Securities, Amex, to Michael Walinskas, Branch Chief, Office of Market Supervision (''OMS''), Division of Market Regulation (''Division''), Commission, dated August 10, 1995 (''Amendment No. 2'').

[6] *See* Securities Exchange Act Release No. 27753 (March 1, 1990), 55 FR 8626 (March 8, 1990).

closely reflects the performance of the underlying real estate market.[7] The Exchange states that the Notes are intended to provide an exchange-listed alternative for investors who wish to gain exposure to general movements in the real estate sector or whose portfolios are heavily weighted in real estate and wish to hedge some of that exposure.

The Notes will be non-convertible debt securities of the issuer and will conform to the listing guidelines under Section 107A of the Guide.[8] The Notes will have a term of two to five years from the date of issue and may provide for periodic payments to holders. At maturity, holders of the Notes will receive not less than 90% of the original issue price of the Notes plus an amount in U.S. dollars equal to participation rate (*i.e.*, a specified percentage) multiplied by the increase, if any, in the level of the Index at the time of the offering and the average of the closing Index level on the first ten of the last twenty business days preceding maturity (''Closing Index Level'').[9]

The Notes may not be redeemed prior to maturity and holders of the Notes will have no claim to the securities underlying the Index. Thus, holders will be able to liquidate their investment prior to maturity only by selling the Notes in the secondary market. The Exchange anticipates that the trading value of the Notes in the secondary market will depend in large part on the value of the securities comprising the Index and such other factors as the level of interest rates, the volatility of the value of the Index, the time remaining to maturity, dividend rates, and the credit of the issuer.

The Notes will be subject to the equity floor trading and margin rules of the Exchange. In addition, members and member firms will have an obligation pursuant to Exchange Rule 411 to learn the essential facts relating to every customer prior to trading the Notes. The Exchange also will require, pursuant to Exchange Rule 411, that a member or member firm specifically approve a customer's account for trading the Notes prior to, or promptly after, the completion of the transaction. The Exchange will also distribute a circular to its membership prior to trading the Notes providing guidance with regard to member firm compliance responsibilities (including suitability recommendations) when handling transactions in the Notes and highlighting the special risks and characteristics of the Notes.

The Index

The Index is calculated as a combination of the performance of two separate equity indexes: the REIT50 Index, which is a total return index comprised of 50 large, activity traded REITs;[10] and the Russell 2000 Index.[11] The Index will initially be set at a level of 100 as of the market close on the day prior to the start of trading of the Notes. At any point in time, the Index value is calculated by multiplying the initial Index level (*i.e.*, 100) by a factor determined as follows. First, the percentage change in the REIT50 Index from the market close of the day prior to the start of trading of the Notes is determined. Next, the percentage change of the Russell 2000 Index from the market close on the day prior to the start of trading of the Notes is determined. One half of the calculated percent change in the Russell 2000 Index is then subtracted from the calculated percent change in the REIT50 Index. This differential is added to the number one to yield the factor by which the initial Index level (*i.e.*, 100) is multiplied to determine the current Index level. The following formula summarizes this calculation:

$$I_t = 100 * \left(1 + \left[\frac{\left(RE50_t - RE50_{init}\right)}{RE50_{init}} - 50\% * \frac{\left(R2000_t - R2000_{init}\right)}{R2000_{init}}\right]\right)$$

Where:

RE50=REIT50 Index.

R2000=Russell 2000 Index.

Init=Indicates the level of the designated index as of the market close on the day prior to the start of trading of the Notes.

t=Indicates the current level of the designated index.

The Index will be calculated continuously based on the most recently reported values of the REIT50 Index and the Russell 2000 Index and will be disseminated every 15 seconds over the Consolidated Tape Association Network B.

Russell 2000 Index

The Russell 2000 Index is a well established, broad-based, benchmark index of the small-capitalization segment of the U.S. equity market.[12] Options on the Russell 2000 Index trade at the Chicago Board Options Exchange [13] and futures trade at the Chicago Mercantile Exchange. The Russell 2000 is capitalization-weighted, and values are disseminated every 15 seconds to market vendors through the Option Price Reporting Authority. The value of the Russell 2000 Index does not reflect reinvestment of dividends paid on component stocks on the index.

REIT50 Index

The REIT50 Index is a new capitalization-weighted index that conforms with Exchange Rule 901C and, as discussed below, is a total return index. The REIT50 Index is composed of the 50 largest publicly-traded equity REITs, as measured by market capitalization, traded on the Amex, NYSE, or as National Market securities traded through Nasdaq.[14] The REIT50 Index will be maintained so that at each quarterly review, as discussed below, each component of the Index will have had an average monthly trading volume of at least 400,000 shares over the prior three month period,[15] with share prices greater than or equal to $5 for the

[7] *See* Discussion of the Index, *infra*.

[8] Specifically, the Notes must have: (1) A minimum public distribution of one million trading units; (2) a minimum of 400 holders; (3) an aggregate market value of at least $4 million; and (4) a term of at least one year. Additionally, the issuer of the Notes must have assets of at least $100 million, stockholders' equity of at least $10 million, and pre-tax income of at least $750,000 in the last fiscal year or in two of the three prior fiscal years. As an alternative to these issuer-specific financial criteria, the issuer may have either: (1) assets in excess of $200 million and stockholders' equity in excess of $10 million; or (2) assets in excess of $100 million and stockholders' equity in excess of $20 million.

[9] If the Closing Index Level is lower than the level of the Index at the time of the offering, holders will receive at least 90% of the original issue price. The minimum level that holders will receive at maturity will be set at the time of the offering of the Notes.

[10] *See* Discussion of the REIT50 Index, *infra*.

[11] *See* Discussion of the Russell 2000 Index, *infra*.

[12] *See* Securities Exchange Act Release No. 31382 (October 30, 1992), 57 FR 52802 (November 5, 1992) (order approving the listing of options on the Russell 2000 Index) (''Exchange Act Release No. 31382'').

[13] *Id*.

[14] *See* Amendment No. 2, *supra* note 5.

[15] *Id*.

majority of business days during the preceding three calendar months. The REIT50 Index also does not and will not include health care REITs or REITs that invest primarily in real estate mortgages or debt securities. The REIT50 Index also will exclude real estate operating companies and partnerships.

As of January 31, 1995, the highest weighed component in the REIT50 Index accounted for 4.66% of the value of the index, and the top five components accounted for 21.00% of the value of the REIT50 Index. Also, during the period from August 1, 1994 through January 31, 1995, the average daily trading volume per component of the REIT50 Index ranged from a low of 19,567 shares per day to a high of 140,173 shares per day. Moreover, as of January 31, 1995, 98.87% of the REIT50 Index, by weight, and 98.00%, by number of components, were eligible for standardized options trading pursuant to Amex Rule 915.[16]

The Exchange will review the component securities on a quarterly basis to ensure that the REIT50 Index continues to represent only the largest and most actively traded REITs. After the close of trading on the last business day of December, March, June, and September, all eligible REITs will be ranked by descending market capitalization, and the 50 largest, subject to the maintenance criteria discussed above, will comprise the REIT50 Index until the next quarterly review. Only REITs that have been trading for at least three calendar months will be considered for inclusion in the REIT50 Index. Resulting composition changes will be made after the close of trading on the third Friday of January, April, July, and October. The divisor of the REIT50 Index will be adjusted as necessary to ensure that there is no discontinuity in the value of the REIT50 Index as a result of these replacements.

The number of component stocks in the REIT50 Index will remain fixed between quarterly reviews. In the event that one or more component securities must be removed due to merger, takeover, bankruptcy, or other circumstances, the REIT next on the list from the most recent quarterly review, subject to the maintenance criteria discussed above, will be selected to replace that security in the REIT50 Index. In such case, the divisor will be adjusted as necessary to ensure that there is no discontinuity in the value of the REIT50 Index.

The REIT50 Index is a total return index in that the regular cash dividends of its component securities are included in calculating the value of the REIT50 Index. Therefore, at the close of trading each day, the prices of component securities that will trade ''ex-dividend'' the next day will be adjusted (downward) by the value of the dividend to reflect the price impact on the stock as it trades without (or ''ex'') the dividend on the following day. The divisor is then adjusted to assure continuity of the Index value. The REIT50 Index value will be calculated continuously throughout the trading day but the value of the REIT50 Index will only be disseminated once per day after the close of trading on the Exchange. This daily closing value for the REIT50 Index will be disseminated over the Consolidated Tape Association's Network B under a separate ticker symbol.[17]

Commission Findings and Conclusions

The Commission finds that the proposed rule change is consistent with the requirements of the Act and the rules and regulations thereunder applicable to a national securities exchange, and, in particular, the requirements of Section 6(b)(5) of the Act.[18] Specifically, the Commission believes that providing for exchange-trading of the Notes will offer a new and innovative means for investors of participating in the market for commercial real estate.[19] In particular, the Commission believes that the Notes will permit investors to gain equity exposure in the commercial real estate market, while at the same time, limiting the downside risk of their original investment. For the reasons discussed in the Indexed Term Note Approval Orders, the Commission finds that the listing and trading of the Notes is consistent with the Act.[20]

As with the other indexed term notes approved for listing by the Exchange, the Notes are not leveraged instruments. Their price, however, will still be derived and based upon the underlying linked securities, *i.e.*, the securities comprising the Russell 2000 and REIT50 Indexes. Accordingly, the level of risk involved in the purchase or sale of Index Notes is similar to the risk involved in the purchase or sale of traditional common stock. Nonetheless, the Commission has several specific concerns with this type of product because the final rate or return of the Notes is derivatively priced, based on the performance of the underlying indexes. The concerns include: (1) Investor protection concerns, (2) dependence on the credit of the issuer of the security, (3) systemic concerns regarding position exposure of issuers with partially hedged positions or dynamically hedged positions, and (4) the impact on the market for the securities represented in the underlying linked indexes.[21] The Commission believes the Amex has adequately addressed each of these issues such that the Commission's regulatory concerns are adequately minimized.[22] In particular, by imposing the listing standards, suitability, disclosure, and compliance requirements noted above, the Amex has adequately addressed the potential public customer concerns that could arise from the hybrid nature of the Notes.[23] Moreover, the Commission believes that the Exchange's existing surveillance procedures are adequate to detect and deter any attempts at manipulation of the Notes and the indexes underlying the Notes.

In addition, even though the Exchange has not proposed any options eligibility requirements for the components of the REIT50 Index, the Commission believes that the listing standards and issuance restrictions discussed above, particularly the

[16] Telephone conversation between Clifford Weber, Managing Director, New Products Development, Amex, and Brad Ritter, Senior Counsel, OMS, Division, Commission, on August 22, 1995.

[17] The Exchange believes that the continuous dissemination of the value of the REIT50 Index throughout the trading day will likely result in confusion between the REIT50 Index and the Morgan Stanley REIT Index that the Exchange will be disseminating every 15 seconds throughout the trading day. *See* Securities Exchange Act Release No. 36103 (August 14, 1995) (approval of the Amex's proposal to list options on the Morgan Stanley REIT Index). Because the values of both the Index and the Russell 2000 Index will be disseminated throughout the trading day, the value of the REIT50 Index at any particular time can easily be calculated by anyone who wants to know the value of the REIT50 Index more frequently than once per day. *See* Amendment No. 2, *supra* note 5.

[18] 15 U.S.C. § 78f(b)(2) (1988).

[19] The Commission notes that the Index Notes are very similar in structure to other indexed term notes recently approved by the Commission for listing on the Amex. *See* Securities Exchange Act Release Nos. 35886 (June 23, 1995), 60 FR 33884, (June 29, 1995) (approval for listing of indexed term notes linked to a portfolio of ''consolidation candidate'' securities), 34820 (October 11, 1994), 59 FR 52571 (October 18, 1994) (approval for listing of indexed term notes linked to a portfolio of ''basic'' industry securities), 34723 (September 27, 1994), 59 FR 50631 (October 4, 1994) (approval for listing of indexed term notes linked to a portfolio of banking industry securities), and 33495 (January 19, 1994), 59 FR 3883 (January 27, 1994) (approval for listing of Telecommunications Basket Stock Upside Note Securities) (collectively, Indexed Term Note Approval Orders'').

[20] *Id.*

[21] *Id.*

[22] *Id.*

[23] The Commission notes that the Exchange will also distribute a circular to its membership calling attention to the specific risks associated with the Notes.

objective standards for share prices and average monthly trading volumes[24] for the REITs represented in the REIT50 Index will ensure that the REIT50 Index will be composed predominantly of highly capitalized, liquid securities.[25] Moreover, because the value of the Index is based on a combination of the values of the REIT50 Index and the Russell 2000 Index, the lack of an options eligibility requirement for the components of the REIT50 Index is even less problematic. The Russell 2000 Index is a broad-based index composed of 2,000 equity securities that the Commission has previously found to be not readily susceptible to manipulation and suitable for standardized options trading.[26] In addition, as of January 31, 1995, greater than 98% of the weight of the REIT50 Index, and 49 of 50 components in the index were options eligible.

Furthermore, because the Notes are non-leveraged, intermediate-term instruments that are based on the difference between two indexes, the Commission believes that the lack of a component concentration maintenance standard for the REIT50 Index does not raise any material regulatory concerns. Specifically, the REIT50 Index will be maintained with the 50 largest exchange-traded REITs, by market capitalization. Moreover, as of January 31, 1995, the highest weighted component accounted for only 4.66% of the weight of the index and the five highest weighted components accounted for only 21.00% of the weight of the index. The Commission believes, therefore, that the potential that the Index could be manipulated by manipulating one or a few components of the REIT50 Index has been adequately minimized.

As a result, the Commission believes that any concerns regarding the potential for manipulation of the Index, the REIT50 Index, or the Russell 2000 Index, or any adverse market impact on the securities comprising the underlying indexes, have been adequately addressed by the Amex.

The Commission also believes that the decision of the Amex to disseminate the value of the REIT50 Index only once per day after the close of trading is consistent with the Act. The value disseminated will be the daily closing value of the REIT50 Index. The Amex will, however, calculate the value of the REIT50 Index continuously throughout the trading day so that the value of the Index that is disseminated will always be based on the current value of the REIT50 Index. Moreover, because the values for the Index and the Russell 2000 Index will be disseminated every 15 seconds throughout the trading day, investors and market participants could calculate the value of the REIT50 Index at any time based on the formula provided above. Additionally, the Commission believes that disseminating the value of the REIT50 Index only once per day after the close will minimize the potential for confusion that may exist between the REIT50 Index and the Morgan Stanley REIT Index, which is also calculated and disseminated by the Amex.

The Commission realizes that Index Notes will be dependent upon the individual credit of the issuer. To some extent this credit risk is minimized by the Exchange's listing standards in Section 107A of the Guide which provide that only issuers satisfying substantial asset and equity requirements may issue securities such as Index Notes.[27] In addition, the Exchange's hybrid listing standards further require that Index Notes have at least $4 million in market value.[28] In any event, financial information regarding the issuer, in addition to information on the underlying indexes and the issuers of the securities comprising the underlying indexes, will be publicly available.[29]

The Commission finds good cause for approving the proposed rule change and Amendment No. 2 to the proposal prior to the thirtieth day after the date of publication of notice of filing thereof in the **Federal Register**. First, Amendment No. 2 provides that the value of the REIT50 Index will only be disseminated by the Amex once per day after the close of trading on the Exchange. For the reasons discussed above, the Commission believes this amendment is consistent with the Act. Moreover, because the Notes will be priced based on the value of the Index, the value of which will be disseminated throughout the trading day, the Commission does not believe that this is a material change to the proposal requiring notice in the **Federal Register** prior to approval.

Second, Amendment No. 2 provides that all components of the REIT50 Index are and will continue to be reported securities, as defined in Rule 11Aa3–1 of the Act, that are traded on the Amex, NYSE, or are National Market securities traded through Nasdaq. This requirement serves to further minimize any concerns regarding potential manipulation of the REIT50 Index.

Third, Amendment No. 2 alters the maintenance criteria for the REIT50 Index concerning average monthly trading volume to make the requirement over a three month rather than a six month period. As discussed above, this requirement is still significantly higher than the Exchange's initial trading volume listing criteria for options on individual securities. Moreover, the original proposal, as it was published in the **Federal Register**, contemplated that the Exchange would be able to add REITs to the REIT50 Index that have been listed and trading for a minimum of three months. As a result, the Commission believes this amendment was necessary in order to eliminate the inconsistency that existed in the original proposal. Furthermore, the Commission notes that the original proposal appeared in the **Federal Register** for the full 21-day comment period and that no comments were received by the Commission regarding the proposal in general, or, the issue of including in the REIT50 Index REITs that have been trading for no less than three months, in particular.

Based on the above, the Commission believes that the proposed rule change is consistent with Section 6(b) (5) of the Act and finds good cause for approving Amendment No. 2 to the proposal on an accelerated basis.

Interested persons are invited to submit written data, views and arguments concerning Amendment No. 2. Persons making written submissions should file six copies thereof with the Secretary, Securities and Exchange Commission, 450 Fifth Street, N.W., Washington, D.C. 20549. Copies of the submission, all subsequent amendments, all written statements with respect to the proposed rule change that are filed with the

[24] The Commission notes that the average monthly trading volume requirement of 400,000 shares per month over a three month period is significantly higher than the Amex's initial trading volume requirement for options on individual securities, which only requires volume of 2.4 million shares over a 12-month period. *See* Amex Rule 915.

[25] For index options and other derivative products where the value of the product is based on an index of securities, the Commission generally requires that a certain percentage of the index, both by weight and by number of components, be eligible for standardized options trading. This requirement serves to minimize the potential for any adverse impact on the markets for the securities underlying these indexes resulting from the trading of these products. *See, e.g.,* Securities Exchange Act Release No. 34157 (June 3, 1994), 59 FR 30062 (June 10, 1994). For the reasons discussed herein, however, the Commission believes that the Amex has structured the Notes, in general, and the REIT50 Index, in particular, so that the lack of such maintenance criteria does not create any significant manipulation or market impact concerns.

[26] *See* Exchange Act Release No. 31382, *supra* note 12.

[27] *See supra* note 8.

[28] *See* Amex Company Guide § 107A.

[29] The companies that comprise the Russell 2000 and REIT50 Indexes are reporting companies under the Act.

Commission, and all written communications relating to the proposed rule change between the Commission and any person, other than those that may be withheld from the public in accordance with the provisions of 5 U.S.C. 552, will be available for inspection and copying in the Commission's Public Reference Section, 450 Fifth Street, N.W., Washington, D.C. Copies of such filing will also be available for inspection and copying at the principal office of the Amex. All submissions should refer to File No. SR–Amex–95–05 and should be submitted by September 19, 1995.

It therefore is ordered, pursuant to Section 19(b)(2) of the Act,[30] that the proposed rule change (SR–Amex–95–05), as amended, is approved.

For the Commission, by the Division of Market Regulation, pursuant to delegated authority.[31]

Margaret H. McFarland,

Deputy Secretary.

[FR Doc. 95–21358 Filed 8–28–95; 8:45 am]

BILLING CODE 8010–01–M

[Release No. 34–36135; File No. SR–CBOE–95–44]

Self-Regulatory Organizations; Notice of Filing and Order Granting Accelerated Approval of Proposed Rule Change by the Chicago Board Options Exchange, Inc., Relating to the Implementation of Systems Changes That Automate Certain Trading Suspensions in Options

August 22, 1995.

Pursuant to Section 19(b)(1) of the Securities Exchange Act of 1934 (''Act''), 15 U.S.C. 78s(b)(1), notice is hereby given that on August 16, 1995, the Chicago Board Options Exchange, Inc. (''CBOE'' or ''Exchange'') filed with the Securities and Exchange Commission (''SEC'' or ''Commission'') the proposed rule change as described in Items I and II below, which Items have been prepared by the self-regulatory organization. The Commission is publishing this notice to solicit comments on the proposed rule change from interested persons.

I. Self-Regulatory Organization's Statement of the Terms of Substance of the Proposed Rule Change

Currently, CBOE Rule 6.3, ''Trading Halts,'' Interpretation and Policy .01, provides that a Post Director [1] or the OBO at a station may suspend trading (including a rotation) for a class or classes of option contracts traded at the station for not longer than five minutes whenever trading in the underlying exchange-listed security is halted or suspended in the primary market, but only if the trading halt or suspension is evidenced by an ''ST'' symbol (for an exchange-listed security) or an ''H'' symbol (for a security traded primarily in the over-the-counter market) that appears on the Class Display Screen for that underlying security, or the trading halt or suspension is verified by the senior person then in charge of the Exchange's control room. The CBOE proposes to amend Exchange Rule 6.3, Interpretation and Policy .01 to implement systems changes that will provide automatic, computerized procedures to suspend trading in specified options classes whenever there is a halt or suspension of trading in an exchange-listed underlying security in the primary market as evidenced by the dissemination by that market of an ''ST'' symbol. The automatic trading suspension will apply only to options on exchange-listed securities. For options on securities traded in the over-the-counter market, a Post Director or OBO will act, as currently provided for, to suspend options trading when trading in the underlying security has been halted or suspended.

The text of the proposal is available at the Office of the Secretary, CBOE and the Commission.

II. Self-Regulatory Organization's Statement of the Purpose of, and Statutory Basis for, the Proposed Rule Change

In its filing with the Commission, the self-regulatory organization included statements concerning the purpose of and basis for the proposed rule change and discussed any comments it received on the proposed rule change. The text of these statements may be examined at the places specified in Item IV below. The self-regulatory organization has prepared summaries, set forth in sections (A), (B), and (C) below, of the most significant aspects of such statements.

(A) Self-Regulatory Organization's Statement of the Purpose of, and Statutory Basis for, the Proposed Rule Change

The purpose of the proposed rule change is to amend CBOE Rule 6.3, Interpretation and Policy .01 to reflect systems changes that will provide automatic procedures to suspend trading in specified classes of options when trading in the underlying exchange-traded security is halted or suspended in the primary market. Currently, under CBOE Rule 6.3, a Post Director or OBO acts to suspend trading in affected classes of options on the CBOE whenever trading in an underlying security is halted or suspended in the primary market. Under CBOE Rule 6.3, Interpretation and Policy .01, the suspension can remain in effect for up to five minutes; any suspension of trading longer than five minutes may only be declared by two Floor Officials pursuant to CBOE Rule 6.3(a).

According to the Exchange, the first indication that trading in an underlying exchange-listed security has been halted or suspended in the primary market is usually the appearance on the Class Display Screen for the underlying security of an ''ST'' symbol dissemination by the primary market.[2] Since it may take a Post Director or an OBO some period of time (which could be 30 seconds or more) to take note of such an indication and act to suspend trading in the affected options, an alert trader may observe the ST symbol, correctly surmise why trading has been suspended, and buy or sell options before trading in the options is suspended, thereby taking advantage of orders entered prior to the time of the suspension of trading of the underlying security.

The CBOE believes that the shorter the delay between the time trading in an underlying security is suspended in the primary market and the time the CBOE suspends trading in the related option, the less opportunity there is for this type of trading activity to take place. To this end, the CBOE has developed, and proposes to implement, an automated, computerized procedure that is capable of reading the market data feed from the primary exchange market [3] (currently

---

[30] 15 U.S.C. § 78s(b)(2) (1988).

[31] 17 CFR 200.30–3(a)(12) (1994).

[1] A Post Director is an Exchange employee at a trading post whose function is to assist the Order Book Official (''OBO'') and the Designated Primary Market Maker at each station at the post.

[2] It has been the Exchange's experience that the New York Stock Exchange (''NYSE'') and the American Stock Exchange (''Amex''), which are the primary markets for most of the stocks underlying options traded on the CBOE, may be relied upon to disseminate an ''ST'' symbol immediately upon suspension of trading in any stock.

[3] The Consolidated Tape Association (''CTA''), which consists of the Amex, the Boston Stock Exchange, the CBOE, the Chicago Stock Exchange, the Cincinnati Stock Exchange, the National Association of Securities Dealers, the NYSE, the Philadelphia Stock Exchange, and the Pacific Stock Exchange, established the Consolidated Tape to disseminate last sale transaction information for trades executed on any of the member exchanges or through NASDAQ. The Securities Information Automation Corporation (''SIAC''), a subsidiary of the NYSE and the Amex, conducts the day-to-day operations of the Consolidated Tape. SIAC makes this information available to all subscribers to the Consolidated Tape; the information disseminated

Continued

available from the NYSE and the Amex) and suspending trading on the floor and turning off the Retail Automatic Execution System (''RAES'') for a specific class or classes of options whenever trading is suspended and an ''ST'' symbol appears for the underlying exchange-listed security. By eliminating the delay occasioned by the need for human intervention, the automated procedure will permit the suspension of options trading at virtually the same instant as the ''ST'' symbol first appears.

The Exchange notes that options trading suspensions that are implemented automatically by computer pursuant to the proposed procedure will be subject to the same conditions and limitations that apply to suspensions declared by a Port Director or OBO under existing CBOE Rule 6.3, Interpretation and Policy .01. That is, no trading suspension may exceed five minutes in duration unless it has been declared by two Floor Officials, and successive five-minute trading suspensions may not be combined. Any longer suspensions of trading may be declared only by two Floor Officials pursuant to CBOE Rule 6.3(a). Notice of the automatic suspension of options trading shall be disseminated to the trading floor and over the Options Price Reporting Authority (''OPRA'') by disseminating a ''T'' symbol and quotation designation 998–999. The CBOE states that the time and duration of the suspension shall be reflected in the Exchange's time and sales display, which is made available through vendor networks.

In addition, the proposal makes a technical correction to CBOE Rule 6.3, Interpretation and Policy .01 by eliminating the reference therein to Exchange Rule 6.3A, which has been rescinded.

By eliminating the delay between the suspension of trading in an underlying security and the suspension of trading in related options, the CBOE believes that the proposed rule change is consistent with Section 6(b) of the Act, in general, and furthers the objectives of Section 6(b)(5), in particular, in that it is designed to prevent fraudulent and manipulative acts and practices, promote just and equitable principles of trade and protect investors and the public interest.

(B) Self-Regulatory Organization's Statement on Burden on Competition

The CBOE does not believe that the proposed rule change will impose any burden on competition.

(C) Self-Regulatory Organization's Statement on Comments on the Proposed Rule Change Received from Members, Participants or Others

No written comments were solicited or received with respect to the proposed rule change.

III. Date of Effectiveness of the Proposed Rule Change and Timing for Commission Action

The CBOE has requested that the proposed rule change be given accelerated effectiveness pursuant to Section 19(b)(2) of the Act. The CBOE states that the Exchange has devoted considerable resources to developing a computer program that permits the automatic suspension of trading immediately upon the appearance of the ''ST'' symbol indicating that trading in an underlying exchange-listed security has been suspended. The Exchange believes that it furthers the protection of investors and the public interest to eliminate any delay between the time trading is suspended in an underlying security and the time trading in the related options is suspended. Because the CBOE has developed and tested the computer program, the Exchange believes it should be permitted to implement the program as soon as possible. The CBOE further claims that the proposed rule change effects a change in an existing trading system of the Exchange that does not significantly affect the protection of investors or the public interest, does not impose any significant burden on competition, and does not have the effect of limiting the access to or availability of the system, and accordingly should be approved on an accelerated basis.

The Commission finds that the proposed rule change is consistent with the requirements of the Act and the rules and regulations thereunder applicable to a national securities exchange, and, in particular, the requirements of Section 6(b)(5) thereunder[4] in that the proposal is designed to perfect the mechanism of a free and open market and to protect investors and the public interest. Specifically, the proposal will allow the Exchange of implement a program that provides an automatic, computerized suspension of trading and disengagement of RAES in specified options classes when trading in the underlying exchange-listed security is suspended or halted in the primary market. According to the CBOE, the proposed computer program is currently able to read the market data feed from the NYSE and Amex and immediately suspend trading in a specific options class or classes whenever an ''ST'' symbol appears in connection with the underlying security, thereby eliminating the potential delay present in the current system, which requires action by a Post Director or OBO to suspend options trading in response to a trading halt in the underlying security.

Accordingly, the Commission believes that the proposal will protect investors by enhancing the Exchange's existing ability under CBOE Rule 6.3, Interpretation and Policy .01 to implement a temporary suspension of options trading when an ''ST'' symbol appears. The Commission notes that options trading suspensions implemented automatically pursuant to the proposal will be subject to the same conditions and limitations that are currently provided in CBOE Rule 6.3, Interpretation and Policy .01. Specifically, no trading suspension under CBOE Rule 6.3, Interpretation and Policy .01 may exceed five minutes, unless it has been declared by two Floor Officials pursuant to CBOE Rule 6.3(a), and successive five-minutes trading suspensions may not be combined. In addition, the CBOE will disseminate notice of an automatic suspension of trading to the trading floor and over OPRA. Moreover, the time and duration of the suspension will be reflected in the Exchange's time and sales display, which is made available through vendor networks.

The Commission believes that it is reasonable for the CBOE to rely on the accuracy of the ''ST'' symbol. In this regard, the Commission notes that CBOE Rule 6.3, Interpretation and Policy .01 currently allows an OBO or Post Director to suspend options trading when an ''ST'' symbol appears. The CBOE states that the data feed from the primary market is reliable and that an ''ST'' symbol has never been disseminated inaccurately.[5] In addition, the Commission notes that it is the policy of the Exchange to contact the primary market immediately after an ''ST'' symbol appears to verify the trading halt in the underlying security and to determine the reasons for the

for each transaction includes the stock symbol, the volume of the trade in round lots, and the price at which the transaction was executed. Information the trading in a stock has been halted also appears on the Consolidated Tape.

[4] 15 U.S.C. § 78f(b)(5) (1982).

[5] Telephone conversation between Michael Meyer, Schiff Hardin & Waite, and Yvonne Fraticelli, Attorney, Options Branch, Division of Market Regulation, Commission, on August 18, 1995.

suspension of trading in the underlying security.[6]

The Commission also finds that the proposal to delete an inaccurate reference to CBOE Rule 6.3A is consistent with the Act because it clarifies CBOE Rule 6.3 and helps to ensure the accuracy of the rule.[7]

Finally, the Commission finds good cause for approving the proposed rule change prior to the thirtieth day after the date of publication of notice thereof in the **Federal Register** because the proposal automates a function currently allowed under CBOE Rule 6.3 to suspend promptly options trading when the primary market has suspended trading in the underlying security. The proposal is also consistent with, and helps to implement, CBOE Rule 6.3, Interpretation and Policy .04, which provides that trading in a stock option will be halted when a regulatory halt in the underlying stock has occurred in the primary market for that stock. For these reasons, the Commission believes it is consistent with Sections 19(b)(2) and 6(b)(5) of the Act to approve the proposed rule change on an accelerated basis.

IV. Solicitation of Comments

Interested persons are invited to submit written data, views and arguments concerning the foregoing. Persons making written submissions should file six copies thereof with the Secretary, Securities and Exchange Commission, 450 Fifth Street, NW., Washington, DC 20549. Copies of the submission, all subsequent amendments, all written statements with respect to the proposed rule change that are filed with the Commission, and all written communications relating to the proposed rule change between the Commission and any person, other than those that may be withheld from the public in accordance with the provisions of 5 U.S.C. 552, will be available for inspection and copying at the Commission's Public Reference Section, 450 Fifth Street, NW., Washington, DC. Copies of such filing will also be available for inspection and copying at the principal office of the above-mentioned self-regulatory organization. All submissions should refer to the file number in the caption above and should be submitted by September 19, 1995.

It is therefore ordered, pursuant to Section 19(b)(2) of the Act,[8] that the proposed rule change (File No. SR–CBOE–95–44), is approved.

For the Commission, by the Division of Market Regulation, pursuant to delegated authority.[9]

Margaret H. McFarland,

Deputy Secretary.

[FR Doc. 95–21356 Filed 8–28–95; 8:45 am]

BILLING CODE 8010–01–M

[6] *Id.*

[7] CBOE Rule 6.3A, ''Equity Market Trading Halt,'' required the Exchange to halt trading in all stock options and all stock index options when trading in stocks on the NYSE had been halted or suspended as a result of the activation of circuit breakers on the NYSE. CBOE Rule 6.3A has been deleted from the CBOE's rules. *See* Securities Exchange Act Release No. 35789 (May 31, 1995), 60 FR 30127 (June 7, 1995) (order approving File No. SR–CBOE–95–05).

[8] 15 U.S.C. § 78s(b)(2) (1982).

[9] 17 CFR 200.30–3(a)(12) (1994).

[Release No. 34–36137; File No. SR–Phlx–95–14]

Self-Regulatory Organizations; Order Approving a Proposed Rule Change and Notice of Filing and Order Granting Accelerated Approval of Amendment No. 2 to the Proposed Rule Change by the Philadelphia Stock Exchange, Inc., Relating to Extension of Market Maker Margin Treatment to Certain Market Maker Orders Entered from Off the Trading Floor

August 23, 1995.

I. Introduction

On March 1, 1995, the Philadelphia Stock Exchange, Inc. (''Phlx'' or ''Exchange'') filed a proposed rule change with the Securities and Exchange Commission (''SEC'' or ''Commission''), pursuant to Section 19(b)(1) of the Securities Exchange Act of 1934 (''Act'')[1] and Rule 19b–4 thereunder,[2] to extend market maker margin treatment to opening orders entered by Phlx Registered Options Traders (''ROTs'') from off the Exchange floor, provided that the greater of 1,000 contracts or 80% of an ROT's total transactions on the Exchange in a calendar quarter are executed in person,[3] and not through the use of orders. Phlx ROTs would also be required to execute at least 75% of their quarterly contract volume in assigned options. The Exchange filed Amendment No. 1 to the proposal on March 29, 1995.[4] The Exchange filed Amendment No. 2 to the proposal on July 25, 1995.[5]

Notice of the proposal, as amended by Amendment No. 1, was published for comment and appeared in the **Federal Register** on May 18, 1995.[6] No comment letters were received on the proposed rule change. This order approves the Exchange's proposal, as amended.

II. Background

Generally, a trade for the account of a specialist or ROT receives market maker, or good faith, margin,[7] as well as favorable capital treatment,[8] due to the affirmative and negative market making obligations[9] imposed on such floor traders by Exchange and Commission rules. Further, Rule 1014, Commentary .01 states that ROTs are considered ''specialists'' for the purposes of the Act and the rules thereunder, which includes capital and margin rules, respecting option transactions initiated and effected by the ROT on the floor in the capacity of an ROT. Accordingly, transactions initiated on-floor by Phlx ROTs are entitled to receive favorable market maker margin treatment. Off-floor opening[10] market maker

[1] 15 U.S.C. 78s(b)(1).

[2] 17 CFR 240.19b–4.

[3] ''In person'' means that options transactions are personally executed by a Registered Options Trader on the Phlx floor.

[4] In Amendment No. 1, the Exchange proposes to require Phlx ROTs to execute at least 75% of their quarterly trades in assigned options for purposes of receiving market maker margin treatment for off-floor orders. The Exchange originally proposed to require an ROT to trade at least 50% of his quarterly contract volume in-assigned options. In addition, Amendment No. 1 states that Phlx proposes to delete the fine schedules under the minor rule plan originally proposed to address violations of the heightened trading requirements, because violations of this program are to be reviewed directly by the Business Conduct Committee and are not to be treated as minor rule plan violations. Finally, Phlx proposes to clarify that the phrase ''may exempt one or more classes of options from this calculation'' in Commentary .01 to Phlx Rule 1014, is intended to mean that certain options may not be eligible for off-floor market maker treatment. *See* Letter from Gerald O'Connell, First Vice President, Phlx, to Michael Walinskas, Branch Chief, Office of Market Supervision (''OMS''), Division of Market Regulation (''Market Regulation''), Commission, dated March 29, 1995 (''Amendment No. 1'').

[5] In Amendment No. 2, the Exchange deletes the reference to ''liquidating open positions'' from Phlx Rule 1014, Commentary .01. The Exchange notes that this amendment does not substantially change the proposal because liquidating an open position is the same as closing a position, which does not require the extension of margin. The Exchange also proposes to amend Advice B–12 to clarify that the Floor Broker is responsible for clearing the Phlx crowd before executing a multiply-traded option on another exchange when initiated from off-floor. Finally, the Exchange proposes to add to Advice C–3 a reference to the new Floor Broker responsibility as enumerated in Advice B–12. *See* Letter from Gerald O'Connell, First Vice President, Phlx. to Michael Walinskas, Branch Chief, OMS, Market Regulation, Commission, dated July 25, 1995 (''Amendment No. 2'').

[6] *See* Securities Exchange Act Release No. 35710 (May 12, 1995), 60 FR 26754.

[7] Regulation T of the Federal Reserve Board, Section 220.12.

[8] SEC Rule 15c3–1(b)(1).

[9] *See e.g.*, Phlx Rule 1014(a) and (c).

[10] Questions of margin and capital treatment do not arise in connection with closing transactions, because such positions only reduce or eliminate existing positions. *See* Amendment No. 2, *supra* note 5.

transactions currently may not qualify for favorable margin treatment under Exchange rules, even if such orders are entered to adjust or hedge the risk of an ROT's positions resulting from on-floor market making activity.

Phlx Rule 1014, Commentary .03 and Floor Procedure Advice (''Advice'') B–3 currently require an ROT to effect at least 50% of his quarterly contract volume in assigned options. Further, an ROT is required to execute in person and not through the use of orders the greater of 1,000 contracts or 50% of his quarterly contract volume, pursuant to Advice B–3 and Rule 1014(b), Commentary .13.

III. Description of the Proposal

The Exchange is proposing to amend Rule 1014 to allow ROTs who meet a more stringent in person, and in-assigned options requirement to receive market maker margin and capital treatment for opening off-floor orders. All ROTs will still be required pursuant to Advice B–3 to trade, at a minimum, (1) in person, and not through the use of orders, the greater of 1,000 contracts or 50% of their total transactions each quarter, and (2) at least 50% of their quarterly contract volume in assigned options.

Specifically, the Exchange proposes to amend Phlx Rule 1014, Commentary .01, to extend market maker margin treatment to opening orders entered by Phlx ROTs from off the Exchange floor, provided that the greater of 1,000 contracts or 80% of an ROT's total transactions on the Exchange in a calendar quarter are executed in person, and not through the use of orders. Phlx ROTs would also be required to execute at least 75% of their quarterly contract volume in assigned options.[11] In addition, the proposal requires that all off-floor orders for which ROTs receive market maker treatment be consistent with their duty to maintain fair and orderly markets, and, in general, be effected for the purposes of hedging, reducing risk of, or rebalancing open positions.

The Exchange believes that because an ROT cannot effectively adjust his positions, or hedge and otherwise reduce the risk of his opening transactions, from off the Phlx trading floor without incurring a significant economic penalty, such ROTs must either be physically present on the Exchange floor or face significant risks of adverse market movements when they must necessarily be absent from the trading floor.[12] Because of these costs and risks, the Exchange believes that Phlx ROTs may be prevented from effectively discharging their market making obligations and may be exposed to unacceptable levels of risk.

Accordingly, the proposed rule change is intended to accommodate the occasional needs of ROTs to adjust or hedge positions in their market accounts at times when they are not physically present on the trading floor. The Phlx believes the proposed rule change does so without diluting the requirement that such ROTs' trading activity must nevertheless fulfill their market making obligations, including contributing to the maintenance of a fair and orderly market on the Exchange.

In addition to the proposed amendment to Commentary .01 of Rule 1014, the Exchange proposes to amend five Phlx floor procedure advices to cover such off-floor market maker orders. First, new paragraph (b) of Advice B–3 would effectuate the proposed provisions of Commentary .01 by referencing the heightened trading requirement in order to receive favorable margin treatment for off-floor orders. Accordingly, entering an off-floor order for a market maker account without compliance with the ''1,000 contracts or 80%'' requirement can result in a Rule 960 disciplinary proceeding, which is separate from any violation of Advice B–3(a),[13] in which violations currently can be charged under the Exchange's minor rule plan.[14]

Second Advice B–4 is proposed to be amended to create an exception to the prohibition against entering off-floor orders into a market maker account. Generally, Advice B–4 would restate the provisions of Commentary .01 to Rule 1014 that an ROT who has executed the greater of 1,000 contracts or 80% of his total transactions in a calendar quarter in person may enter opening transactions from off the floor on limited occasions for his market maker account if such transactions are for the purpose of hedging, reducing risk of, or rebalancing open positions.

Third, by amending the title of Advice B–8, the Phlx intends to limit its effect to situations where an ROT uses a Floor Broker while the ROT is on the Phlx Floor. Because ROTs cannot currently enter off-floor opening orders into a market maker account, the language of this advice presumes that ROTs are on the floor, and, hence, able to comply with the requirements of initialing the order ticket. Because this proposal would permit entering opening orders from off-floor and because ROTs who are off-floor cannot initial and time stamp a ticket, Advice B–8 would now expressly apply, as reflected in the new title, only to on-floor situations. Nevertheless, the requirement that an ROT state whether an order is opening or closing appears in Advice B–4, and the Floor Broker must time stamp the order pursuant to Advice C–2. Thus, the Exchange believes that off-floor orders should be appropriately designated and handled, despite the inapplicability of Advice B–8.

Fourth, Advice B–12 is proposed to be amended to clarify the margin treatment of orders sent to another exchange in a multiply traded option. Although such orders must currently be initiated from the Phlx floor and must clear the Phlx crowd, the proposed changes would permit off-floor orders to be sent to another exchange. Such orders must nevertheless clear the Phlx crowd by a designated Floor Broker. The purpose of this change is to treat orders in multiply traded options, whether originating from on or off-floor, the same way for margin purposes, extending limited market maker treatment.

Lastly, Advice C–3 is proposed to be amended to incorporate this extension of specialist margin treatment into the advice enumerating Floor Broker responsibilities. Specifically, Floor Brokers would be required to mark floor tickets where an ROT has indicated that the order is for his market maker account with the letter ''P''. A fine for violations would be administered pursuant to the Exchange's minor rule plan. The Exchange believes that this should assist its surveillance efforts

[11] Essentially, ROTs may receive favorable market maker margin treatment for off-floor opening transactions comprising no more than 20% of their total transactions if they meet both heightened in-person and assigned class trading requirements. *See also* Amendment No. 1, *supra* note 4.

[12] An ROT would have the choice of closing out all existing options positions while off-floor or keeping such positions open which would raise market risk concerns for the ROT. *See also* Phlx Rule 1014, Commentary .08.

[13] Advice B–3(a) requires ROTs to effect at least 50% of their quarterly contract volume in assigned options. Further, ROTs are required to execute in person and not through the use of orders the greater of 1,000 contracts or 50% of their quarterly contract volume, pursuant to Advice B–3(a).

[14] The Phlx's minor rule violation enforcement and reporting plan (''minor rule plan''), codified in Phlx Rule 970, contains floor procedure advices with accompanying fine schedules. Rule 19d–1(c)(2) authorizes national securities exchanges to adopt minor rule violation plans for summary discipline and abbreviated reporting; Rule 19d–1(c)(1) requires prompt filing with the Commission of any final disciplinary actions. However, minor rule violations not exceeding $2,500 are deemed not final, thereby permitting periodic, as opposed to immediate reporting. Although the Exchange is proposing to amend several advices, only Advice C–3 will contain a minor rule plan fine. The Commission notes that the Phlx has the discretion to take any violations, including those under the minor rule plan, to full disciplinary proceedings and would expect the Phlx to do so for egregious and repetitive violations of Advice C–3.

respecting market maker margin for off-floor orders.

The Phlx believes that the proposed rule change is consistent with and in furtherance of the objectives of Section 6(b)(5) and Section 11(a) of the Act in that will promote the maintenance of fair and orderly markets on the Phlx and will contribute to the protection of investors and the public interest. Specifically, the Phlx believes that the proposal should increase the extent to which ROT trades contribute to liquidity and to the maintenance of a fair and orderly market on the Exchange by providing for a greater degree of in person trading by ROTs and by enabling such ROTs to better manage the risk of their market making activities. Likewise, the Phlx believes that the corresponding amendments to Phlx advices are intended to incorporate specialist margin treatment for off-floor orders into the provisions governing trading requirements, ROTs entering orders, and Floor Broker responsibilities, consistent with Section 6(b)(5).

IV. Commission Finding and Conclusions

The Commission finds that the proposed rule change is consistent with the requirements of the Act and the rules and regulations thereunder applicable to a national securities exchange, and, in particular, with the requirements of Section 6(b)(5) [15] in that the proposal is designed to promote just and equitable principles of trade and to protect investors and the public interest. In addition, the Commission finds that the proposal is consistent with the requirement under Section 11(b) of the Act and the rules thereunder that require market maker transactions to be consistent with the maintenance of fair and orderly markets.[16]

The Commission believes that the proposal is a reasonable effort by the Phlx to accommodate the needs of ROTs to effect off-floor opening transactions while reinforcing the requirement under Phlx Rule 1014 that ROTs' transactions constitute a course of dealing reasonably calculated to contribute to the maintenance of a fair and orderly market. The Commission believes that the 75% minimum assigned class requirement, and the greater of 1,000 contracts or 80% in person trading requirement for market maker treatment for off-floor trades, will help ensure that ROTs' transactions continue to contribute to the maintenance of fair and orderly markets while, at the same time, enabling ROTs to better manage the risk of their market making activities.

Moreover, these heightened requirements for ROTs' transactions to receive favorable margin treatment for off-floor transactions will improve Phlx market maker capabilities. The Commission believes these requirements will help to ensure that ROTs will be physically present in their assigned classes to respond to public orders and to improve the price and size of the markets made on the Phlx floor. Thus, the Commission believes the Phlx proposal will serve to maintain fair and orderly markets and generally promote the protection of investors and the public interest.[17]

The Commission believes that the Exchange's proposal to amend Phlx floor procedure Advices B–3 and B–4 appropriately reflect the heightened trading requirements in proposed amendment to Phlx Rule 1014. Furthermore, the Commission agrees with the Exchange that violations of these heightened trading requirements should be subject to Business Conduct Committee review pursuant to Phlx Rule 960.

The Commission believes that the proposed amendment to the title of Advice B–8 is appropriate, because the Phlx intended Advice B–8 to apply to situations when an ROT is on the floor. Additionally, the Commission believes that the proposed amendments to Advice C–3 appropriately addresses the duties of the Floor Broker when an ROT enters an off-floor order.

The Commission believes that the proposed amendment to Advice B–12 adequately reflects the heightened trading requirements in the proposed amendment to Phlx Rule 1014, and the duties of Phlx Floor Brokers when executing orders on another exchange that involve multiply-traded options initiated by a Phlx ROT from off the Phlx floor. The Commission notes that under Advice B–12, the Floor Broker must clear the Phlx crowd in the same manner that a Phlx ROT must when initiating an opening order from on the Phlx floor and sending the order for execution on another exchange for the market maker account.[18]

The Commission expects the Phlx to closely monitor those ROTs electing to receive market maker margin treatment for off-floor orders as provided under the proposal to ensure that they are meeting the in person, and in-assigned options classes trading requirements in addition to their other market making obligations required under Phlx Rule 1014, as amended. The Phlx has represented that ROTs who choose to receive favorable margin and capital treatment but fail to satisfy the proposal's requirements will be referred to the Exchange's Business Conduct Committee pursuant to Phlx Rule 960 governing disciplinary proceedings. The Commission expects the Exchange to impose strict sanctions for violations of the rule and corresponding advices, particularly in cases of egregious or repeated failures to comply with the rule and advices.[19] Such sanctions could include expulsion, suspension, fine, censure, limitations or termination as to activities, functions, operations, or association with a member or member organization.[20] The Commission notes, that in determining the appropriate sanction, the Phlx should assess whether the off-floor orders for which an ROT receives market maker treatment are consistent with such ROT's duty to maintain fair and orderly markets, and, in general, be effected for the purposes of hedging, reducing risk of, or rebalancing open positions of the ROT.

In summary, the Commission believes that the introduction of an increase in the required percentages of trades in person, and in assigned classes to receive favorable margin treatment for off-floor transactions, as described above, should help to ensure the stability and orderliness of the Phlx's markets.

Finally, the Commission notes that the staff of the Board of Governors of the Federal Reserve System (''Board'') has previously issued a letter raising no objection to the Commission's approval of a substantively similar proposal by the CBOE based on the Commission's belief that off-floor transactions of market makers for which they can receive market maker treatment will be designed to contribute to the maintenance of a fair and orderly

[15] 15 U.S.C. 78f(b)(5).

[16] 15 U.S.C. 78k and 17 CFR 240.11b–1.

[17] *See* Securities Exchange Act Release No. 21008 (June 1, 1984), 49 FR 23721 (June 7, 1984) (order approving proposed rule change by the Chicago Board Options Exchange (''CBOE'') establishing minimum in person and assigned class trading requirements for market makers).

[18] By imposing stringent in person, and in assigned options trading requirements for ROTs, Advice B–3 effectively ensures that ROTs will not be able to use the Phlx floor simply to send orders to other markets but instead will have substantive obligations that ensure they are acting as a bona fide market-maker. *See* Securities Exchange Act Release No. 34463 (July 29, 1994), 59 FR 39798 (August 4, 1994) (SR–Phlx–92–12).

[19] The Phlx plans to issue a circular to its membership describing the rule change and emphasizing the importance of monitoring off-floor trading activity. Telephone conversation between Edith Hallahan, Attorney, Phlx, and John Ayanian, Attorney, OMS, Market Regulation, Commission, on August 1, 1995.

[20] *See* Phlx Rule 960.10.

market and would be consistent with the obligations of a specialist under Section 11 of the Act.[21]

The Commission finds good cause for approving Amendment No. 2 to the proposed rule change prior to the thirtieth day after the date of publication of notice of filing thereof in the **Federal Register**. Specifically, Amendment No. 2 makes certain technical clarifications to the proposal and raises no new regulatory issues. Accordingly, the Commission believes it is consistent with Sections 6(b)(5) and 19(b)(2) of the Act to approve Amendment No. 2 to the proposed rule change on an accelerated basis.

Interested persons are invited to submit written data, views and arguments concerning Amendment No. 2 to the proposal. Persons making written submissions should file six copies thereof with the Secretary, Securities and Exchange Commission, 450 Fifth Street, N.W., Washington, D.C. 20549. Copies of the submission, all subsequent amendments, all written statements with respect to the proposed rule change that are filed with the Commission, and all written communications relating to the proposed rule change between the Commission and any person, other than those that may be withheld from the public in accordance with the provisions of 5 U.S.C. 552, while be available for inspection and copying in the Commission's Public Reference Section, 450 Fifth Street, N.W., Washington, D.C. Copies of such filing will also be available for inspection and copying at the principal office of the Exchange. All submissions should refer to File No. SR–Phlx–95–14 and should be submitted by September 19, 1995.

It is therefore ordered, pursuant to Section 19(b)(2) of the Act,[22] that the proposed rule change (File No. SR–Phlx–95–14), as amended, is approved.

For the Commission, by the Division of Market Regulation, pursuant to delegated authority.[23]

Margaret H. McFarland,

Deputy Secretary.

[FR Doc. 95–21359 Filed 8–28–95; 8:45 am]

BILLING CODE 8010–01–M

[21] *See* Securities Exchange Act Release No. 34104 (May 25, 1994), 59 FR 28438 (June 1, 1994), note 13, (*citing* letter from Scott Holz, Senior Attorney, Board, to Howard Kramer, Associate Director, OMS, Market Regulation, Commission, dated March 9, 1994). *See also* Securities Exchange Act Release No. 35768 (May 31, 1995), 60 FR 30122 (June 7, 1995).

[22] 15 U.S.C. 78s(b)(2).

[23] 17 CFR 200.30–3(a)(12).

[Release No. 34–36138; File No. SR–OCC–95–09]

Self-Regulatory Organizations; The Options Clearing Corporation; Notice of Filing and Order Granting Accelerated Approval on a Temporary Basis of a Proposed Rule Change Relating to Revisions to the Standards for Letters of Credit Deposited as Margin

August 23, 1995.

Pursuant to Section 19(b)(1) of the Securities Exchange Act of 1934 (''Act''),[1] notice is hereby given that on July 7, 1995, The Options Clearing Corporation (''OCC'') filed with the Securities and Exchange Commission (''Commission'') the proposed rule change as described in Items I and II below, which items have been prepared primarily by OCC. The Commission is publishing this notice and order to solicit comments from interested persons and to grant accelerated approval of the proposed rule change on a temporary basis through June 28, 1996.

I. Self-Regulatory Organization's Statement of the Terms of Substance of the Proposed Rule Change

The proposed rule change extends the Commission's previous temporary approval of OCC's modifications that relate to OCC's standards for letters of credit deposited with OCC as margin. In general, OCC requires that letters of credit deposited by clearing members as margin with OCC be irrevocable and unless otherwise permitted by OCC expire on a quarterly basis. In addition, OCC may draw upon a letter of credit regardless of whether the clearing member has been suspended or defaulted on any obligation to OCC if OCC determines that such action is advisable to protect OCC, other clearing members, or the general public.[2]

II. Self-Regulatory Organization's Statement of the Purpose of, and Statutory Basis for, the Proposed Rule Change

In its filing with the Commission, OCC included statements concerning the purpose of and basis for the proposed rule change and discussed any comments it received on the proposed rule change. The text of these statements may be examined at the places specified in Item IV below. OCC has prepared summaries, set forth in sections (A), (B), and (C) below, of the most significant aspects of such statements.[3]

(A) Self-Regulatory Organization's Statement of the Purpose of, and Statutory Basis for, the Proposed Rule Change

The Commission previously granted temporary approval to proposed rule changes filed by OCC that modified OCC Rule 604, which sets forth the standards for letters of credit deposited with OCC as margin.[4]

The standards set forth in Rule 604 include the following: (1) In order to conform to the Uniform Commercial Code and to avoid any ambiguity as to the latest time for honoring demands upon letters of credit, letters of credit must state expressly that payment must be made prior to the close of business on the third banking day following demand, (2) letters of credit must be irrevocable, (3) letters of credit must expire on a quarterly basis, and (4) OCC may draw upon letters of credit at any time, regardless of whether the clearing member that deposited the letter of credit has been suspended or is in default, if OCC determines that such action is advisable to protect OCC, other clearing members, or the general public.[5]

OCC believes that the proposed rule change is consistent with the requirements of Section 17A(b)(3)(F) of the Act[6] because the proposed rule change promotes the protection of investors by enhancing OCC's ability to safeguard the securities and funds in its custody or control or for which it is responsible.

[1] 15 U.S.C. 78s(b)(1) (1988).

[2] For a complete description of these modifications to the standards for letters of credit, refer to Securities Exchange Act Release No. 29641 (August 30, 1991), 56 FR 46027 [File No. SR–OCC–91–13] (order temporarily approving proposed rule change through February 28, 1992).

[3] The Commission has modified the text of the summaries prepared by OCC.

[4] Securities Exchange Act Release Nos. 29641 (August 30, 1991), 56 FR 46027 [File No. SR–OCC–91–13] (order temporarily approving proposed rule change through February 28, 1992); 30424 (February 28, 1992), 45 FR 8160 [File No. SR–OCC–92–06] (order temporarily approving proposed rule change through May 31, 1992); 30763 (June 1, 1992), 57 FR 24284 [File No. SR–OCC–92–11] (order temporarily approving proposed rule change through August 31, 1992); 31126 (September 1, 1992) 57 FR 40925 [File No. SR–OCC–92–19] (order temporarily approving proposed rule change through December 31, 1992); 31614 (December 17, 1992), 57 FR 61142 [File No. SR–OCC–92–37] (order temporarily approving proposed rule change through June 30, 1993); 32532 (June 28, 1993) 58 FR 36232 [File No. SR–OCC–93–14] (order temporarily approving proposed rule change through June 30, 1994); and 34206 (June 13, 1994), 59 FR 31661 [File No. SR–OCC–94–06] (order temporarily approving proposed rule change through June 30, 1995).

[5] *Supra* note 2.

[6] 15 U.S.C. 78q–1.

(B) Self-Regulatory Organization's Statement on Burden on Competition

OCC does not believe that the proposed rule change will impact or impose a burden on competition.

(C) Self-Regulatory Organization's Statement on Comments on the Proposed Rule Change Received From Members, Participants or Others

Comments were not and are not intended to be solicited by OCC with respect to the proposed rule change, and none were received. Since approval of the original proposed rule change modifying its letter of credit standards, OCC has received no adverse comments or complaints from any of its clearing members, the banks, or other interested parties with respect to the modifications to Rule 604 or to the implementation of the revised letter of credit standards.

III. Date of Effectiveness of the Proposed Rule Change and Timing for Commission Action

Section 17A(b)(3)(F) of the Act requires that the rules of a clearing agency be designed to assure the safeguarding of securities and funds in its custody or control or for which it is responsible.[7] The Commission believes that the proposed rule change is consistent with OCC's obligations under Section 17A(b)(3)(F) because the modified standards for letters of credit will enable OCC to draw upon a letter of credit at any time that OCC determines that such a draw is advisable to protect OCC, other clearing members, or the general public. This ability increases the liquidity of its margin deposits by enabling OCC to substitute cash collateral for a clearing member's letter of credit and consequently, will permit OCC to rely more safely upon such letters of credit. In addition, by eliminating the issuer's right to revoke the letter of credit, an issuer will no longer be able to revoke a letter of credit at a time when the clearing member is experiencing financial difficulty and most needs credit facilities. Finally, requiring that the letters of credit expire quarterly rather than annually will result in the issuers conducting more frequent credit reviews of the clearing members for whom the letters of credit are issued. More frequent credit reviews will facilitate the discovery of any adverse developments in a more timely manner. By approving the proposed rule change on a temporary basis through June 28, 1996, OCC, the Commission, and other interested parties will be able to assess further, prior to permanent Commission approval, any effects the revised standards have on letter of credit issuance and on margin deposited at OCC.[8]

OCC has requested that the Commission find good cause for approving the proposed rule change on an accelerated basis prior to the thirtieth day after the date of publication of notice of the filing. The Commission finds good cause for so approving the proposed rule change because accelerated approval will allow the changes that have been implemented pursuant to the previous temporary approval order to remain in place during the further assessment of any effects the revised standards have on the issuance of letters of credit and on margin deposited at OCC pending permanent approval.

IV. Solicitation of Comments

Interested persons are invited to submit written data, views, and arguments concerning the foregoing. Persons making written submissions should file six copies thereof with the Secretary, Securities and Exchange Commission, 450 Fifth Street, N.W., Washington, D.C. 20549. Copies of the submission, all subsequent amendments, all written statements with respect to the proposed rule change that are filed with the Commission, and all written communications relating to the proposed rule change between the Commission and any person, other than those that may be withheld from the public in accordance with the provisions of 5 U.S.C. § 552, will be available for inspection and copying in the Commission's Public Reference Section, 450 Fifth Street, N.W., Washington, DC 20549. Copies of such filing also will be available for inspection and copying at the principal office of OCC. All submissions should refer to File No. SR–OCC–95–09 and should be submitted by September 19, 1995.

V. Conclusion

On the basis of the foregoing, the Commission finds that OCC's proposed rule change is consistent with the Act and in particular with Section 17A of the Act.

It is therefore ordered, under Section 19(b)(2) of the Act, that the proposal (File No. SR–OCC–95–09) be, and hereby is, approved on a temporary basis through June 28, 1996.

For the Commission by the Division of Market Regulation, pursuant to delegated authority.[9]

Margaret H. McFarland,

Deputy Secretary.

[FR Doc. 95–21354 Filed 8–28–95; 8:45 am]

BILLING CODE 8010–01–M

[7] 15 U.S.C. § 78q-1(b)(3)(F) (1988).

[8] The Commission and OCC currently are studying concentration limits on letters of credit deposited as margin. The Division believes that clearing agencies that accept letters of credit as margin deposits or clearing fund contributions should limit their exposure by imposing concentration limits on the use of letters of credit. Generally, clearing agencies impose limitations on the percentage of an individual member's required deposit or contribution that may be satisfied with letters of credit, limitations on the percentage of the total required deposits or contributions that may be satisfied with letters of credit by any one issuer, or some combination of both. OCC has no concentration limits on the use of letters of credit issued by U.S. institutions.

[9] 17 CFR 200.30-3(a)(12) (1994).

[Release No. 34–36131; International Series Release No. 844 File No. SR–Phlx–95–52]

Self-Regulatory Organizations; Notice of Filing of Proposed Rule Change by the Philadelphia Stock Exchange, Inc. Relating to Customized Expiration Dates for Customized Foreign Currency Options

August 22, 1995.

Pursuant to Section 19(b)(1) of the Securities Exchange Act of 1934 (''Act''), 15 U.S.C. 78s(b)(1), notice is hereby given that on July 27, 1995, the Philadelphia Stock Exchange, Inc. (''Phlx'' or ''Exchange'') filed with the Securities and Exchange Commission (''Commission'') the proposed rule change as described in Items I, II, and III below, which Items have been prepared by the Phlx. The Commission is publishing this notice to solicit comments on the proposed rule change from interested persons.

I. Self-Regulatory Organization's Statement of the Terms of Substance of the Proposed Rule Change

The Phlx proposes to amend Exchange Rule 1069(a) in order to offer the ability to trade customized foreign currency options (''Customized FCOs'') with any expiration date up to two years from the date of issuance. The text of the proposed rule change is available at the Office of the Secretary, the Phlx, and at the Commission.

II. Self-Regulatory Organization's Statement of the Purpose of, and Statutory Basis for, the Proposed Rule Change

In its filing with the Commission, the Phlx included statements concerning the purpose of and basis for the proposed rule change and discussed any comments it received on the proposed rule change. The text of these statements may be examined at the places specified

in Item IV below. The Phlx has prepared summaries, set forth in sections (A), (B), and (C) below, of the most significant aspects of such statements.

(A) Self-Regulatory Organization's Statement of the Purpose of, and Statutory Basis for, the Proposed Rule Change

On November 1, 1994, the Commission approved the Exchange's proposal to trade Customized FCOs.[1] Customized FCOs provide users of the Exchange's foreign currency options (''FCOs'') markets with the ability to customize the strike price and quotation method and to choose any underlying and base currency combination out of all Exchange-listed currencies, including the U.S. dollar, for their FCO transactions. The Phlx represents that Customized FCOs were introduced to attract institutional customers who enjoy the flexibility and variety offered in the over-the-counter foreign currency market but who prefer the benefits attributed to an exchange auction market for hedging their exchange rate risks.

The Exchange now proposes to add a new feature to Customized FCOs—customized expiration dates. Presently, users can only trade Customized FCO contracts with expiration dates corresponding to those for non-Customized FCOs pursuant to Exchange Rule 1012. Thus, Customized FCO contracts with mid-month and end-of-month expirations at 1, 2, 3, 6, 9, 12, 18, and 24 months may be traded.

Under this proposal, Customized FCO contracts expiring on any business day (excluding Exchange holidays (*e.g.*, Memorial Day) and Exchange-designated holidays (*e.g.*, Boxing Day)) in any month up to two years from the date of issuance would be available. The Exchange represents that institutions and multinational corporations will thus be able to hedge their exchange rate exposure more accurately by trading a contract that expires on any trading day that they choose.

Under the proposal, any Customized FCO contract opened with a customized expiration date will cease trading at 9:00 a.m., Philadelphia time, on its expiration date and will expire at 10:15 a.m., Philadelphia time, on that date. Customized FCOs with expiration dates pursuant to Phlx Rule 1012 (*i.e.*, Customized FCOs with expiration dates corresponding to the expiration dates for non-Customized FCOs) will not follow this procedure. These option contracts will still cease trading at 2:30 p.m., Philadelphia time, on their expiration dates, and expire at 11:59 p.m., Philadelphia time, on those dates, even if intentionally or unintentionally designated as a Customized FCO with a customized expiration date. New series of Customized FCOs with ''same day'' expiration dates may not be opened, but open positions can be reduced or increased on their expiration date. The Exchange represents that the Options Clearing Corporation (OCC) will use a pro rata assignment process instead of the current random assignment process for Customized FCOs with customized expiration dates.

The Exchange believes that the proposed rule change is consistent with Section 6 of the Act, in general, and with Section 6(b)(5), in particular, in that it is designed to promote just and equitable principles of trade, prevent fraudulent and manipulative acts and practices, facilitate transactions in securities, remove impediments to and perfect the mechanism of a free and open market and a national market system, and protect investors and the public interest by offering users of FCOs the ability to customize the expiration dates of the Customized FCOs in order to better hedge their exchange rate risks.

(B) Self-Regulatory Organization's Statement on Burden on Competition

The Phlx does not believe that this proposed rule change will impose any inappropriate burden on competition.

(C) Self-Regulatory Organization's Statement on Comments on the Proposed Rule Change Received From Members, Participants or Others

No written comments were solicited or received with respect to the proposed rule change.

III. Date of Effectiveness of the Proposed Rule Change and Timing for Commission Action

Within 35 days of the date of publication of this notice in the **Federal Register** or within such longer period (i) as the Commission may designate up to 90 days of such date if it finds such longer period to be appropriate and publishes its reasons for so finding or (ii) as to which the self-regulatory organization consents, the Commission will:

(A) By order approve such proposed rule change, or

(B) Institute proceedings to determine whether the proposed rule change should be disapproved.

IV. Solicitation of Comments

Interested persons are invited to submit written data, views and arguments concerning the foregoing. Persons making written submissions should file six copies thereof with the Secretary, Securities and Exchange Commission, 450 Fifth Street, N.W., Washington, D.C. 20549. Copies of the submission, all subsequent amendments, all written statements with respect to the proposed rule change that are filed with the Commission, and all written communications relating to the proposed rule change between the Commission and any person, other than those that may be withheld from the public in accordance with the provisions of 5 U.S.C. 552, will be available for inspection and copying in the Commission's Public Reference Section, 450 Fifth Street, N.W., Washington, D.C. Copies of such filing will also be available for inspection and copying at the principal office of the Phlx. All submissions should refer to File No. SR–Phlx–95–52 and should be submitted by September 19, 1995.

For the Commission, by the Division of Market Regulation, pursuant to delegated authority.[2]

Margaret H. McFarland,

Deputy Secretary.

[FR Doc. 95–21357 Filed 8–28–95; 8:45 am]

BILLING CODE 8010–01–M

[1] *See* Securities Exchange Act Release No. 34925 (November 1, 1994), 59 FR 55720 (November 8, 1994).

[2] 17 CFR 200.30–3(a)(12) (1994).

SMALL BUSINESS ADMINISTRATION

[License No. 09/79–0404]

Bay Partners SBIC, L.P.; Notice of Issuance of a Small Business Investment Company License

On Wednesday, June 14, 1995, a notice was published in the **Federal Register** (Vol. 60, No. 114, FR 31344) stating that an application had been filed by Bay Partners SBIC, L.P., at 10600 North De Anza Boulevard, Suite 100, Cupertino, California 95014, with the Small Business Administration (SBA) pursuant to § 107.102 of the Regulations governing small business investment companies (13 CFR 107.102 (1995)) for a license to operate as a small business investment company.

Interested parties were given until close of business Wednesday, June 28, 1995 to submit their comments to SBA. No comments were received.

Notice is hereby given that, pursuant to Section 301(c) of the Small Business Investment Act of 1958, as amended, after having considered the application

and all other pertinent information, SBA issued License No. 09/79–0404 on July 28, 1995, to Bay Partners SBIC, L.P. to operate as a small business investment company.

(Catalog of Federal Domestic Assistance Program No. 59.011, Small Business Investment Companies)

Dated: August 23, 1995.

Darryl K. Hairston,

Deputy Associate Administrator for Investment.

[FR Doc. 95–21320 Filed 8–28–95; 8:45 am]

BILLING CODE 8025–01–P

[Application No. 99000173]

Geneva Middle Market Investors, L.P.; Notice of Filing of an Application for a License to Operate as a Small Business Investment Company

Notice is hereby given of the filing of an application with the Small Business Administration (SBA) pursuant to § 107.102 of the Regulations governing small business investment companies (13 CFR 107.102 (1995)) by Geneva Middle Market Investors, L.P. at 70 Walnut Street, Wellesley, Massachusetts 02181 for a license to operate as a small business investment company (SBIC) under the Small Business Investment Act of 1958, as amended, (15 U.S.C. *et. seq.*), and the Rules and Regulations promulgated thereunder. The applicant will consider investments in businesses located throughout the United States.

Geneva Middle Market Investors, L.P., a Delaware limited partnership, will be managed by GMM Investors Corporation, the applicant's corporate general partner. Full-time management to the applicant will be provided by James J. Goodman, Douglas M. Troob and Stephanie L. Wagner. Mr. Goodman will serve as President, Mr. Douglas Troob as Vice President and Secretary, and Ms. Wagner as Associate of GMM Investors Corporation. The board of directors of the GMM Investors Corporation will be David H. Troob (Chairman), Robert L. Kuhn, Thomas L. Kempner, Donald R. Weisberg, and James J. Goodman. Each of the Directors has had extensive experience in private company investing. The applicant is affiliated with The Geneva Companies, a leading source for acquisition of privately held companies with capitalization below $50 million.

The following limited partners will own 10 percent or more of the proposed SBIC:

Name	Percentage of ownership
GTLK Holdings, Inc., 5 Park Place, Suite 1900, Irvine, California 92714	20

The applicant will begin operations with Regulatory Capital of $10.8 million and will focus its investment portfolio in growing companies principally in the manufacturing, wholesaling, retailing, and service industries. The applicant will invest primarily in companies with strong growth prospects in need of expansion financing.

Matters involved in SBA's consideration of the application include the general business reputation and character of the proposed owners and management, and the probability of successful operations of the new company under their management, including profitability and financial soundness in accordance with the Act and Regulations.

Notice is hereby given that any person may, not later than 15 days from the date of publication of this Notice, submit written comments on the proposed SBIC to the Associate Administrator for Investment, Small Business Administration, 409 3rd Street, SW, Washington, DC 20416.

A copy of this Notice will be published in a newspaper of general circulation in Boston, Massachusetts.

(Catalog of Federal Domestic Assistance Programs No. 59.011, Small Business Investment Companies)

Dated: August 23, 1995.

Darryl K. Hairston,

Deputy Associate Administrator for Investment.

[FR Doc. 95–21321 Filed 8–28–95; 8:45 am]

BILLING CODE 8025–01–P

DEPARTMENT OF TRANSPORTATION

Federal Aviation Administration

Notice of Intent to Rule on Application to Use the Revenue From a Passenger Facility Charge (PFC) at Springfield-Branson Regional Airport, Springfield, Missouri

AGENCY: Federal Aviation Administration (FAA), DOT.

ACTION: Notice of Intent to Rule on Application.

SUMMARY: The FAA proposes to rule and invites public comment on the application to use the revenue from a PFC at Springfield-Branson Regional Airport under the provisions of the Aviation Safety and Capacity Expansion Act of 1990 (Title IX of the Omnibus Budget Reconciliation Act of 1990) (Public Law 101–508) and Part 158 of the Federal Aviation Regulations (14 CFR Part 158).

DATES: Comments must be received on or before September 28, 1995.

ADDRESSES: Comments on this application may be mailed or delivered in triplicate to the FAA at the following address:

Federal Aviation Administration, Central Region, Airports Division, 601 E. 12th Street, Kansas City, MO 64106.

In addition, one copy of any comments submitted to the FAA must be mailed or delivered to Mr. Robert D. Hancik, A.A.E., Director of Aviation, Springfield-Branson Regional Airport, at the following address:

Springfield-Branson Regional Airport, Route 6, Box 384–15, Springfield, Missouri 65803.

Air carriers and foreign air carriers may submit copies of written comments previously provided to the Springfield-Branson Regional Airport, under § 158.23 of Part 158.

FOR FURTHER INFORMATION CONTACT: Ellie Anderson, PFC Coordinator, FAA, Central Region, 601 E. 12th Street, Kansas City, MO 64106, (816) 426–4728. The application may be reviewed in person at this same location.

SUPPLEMENTARY INFORMATION: The FAA proposes to rule and invites public comment on the application to use a PFC at Springfield-Branson Regional Airport under the provisions of the Aviation Safety and Capacity Expansion Act of 1990 (Title IX of the Omnibus Budget Reconciliation Act of 1990) (Public Law 101–508) and Part 158 of the Federal Aviation Regulations (14 CFR Part 158).

On August 17, 1995, the FAA determined that the application to use the revenue from a PFC submitted by the Springfield-Branson Regional Airport, Springfield, Missouri, was substantially complete within the requirements of § 158.25 of Part 158. The FAA will approve or disapprove the application, in whole or in part, no later than November 17, 1995.

The following is a brief overview of the application.

Level of the proposed PFC: $3.00
Charge effective date: November 1, 1993
Proposed charge expiration date: August 1, 1997
Total estimated PFC revenue: $3,110,588
Brief description of proposed project(s): Remove hangars and expand apron; construct snow removal equipment

building; construct partial parallel taxiway to R02/20; rehabilitate air carrier apron.

Class or classes of air carriers which the public agency has requested not be required to collect PFCs: On-Demand Air Taxi/Commercial Operators, operating exclusively under 14 CFR Part 135 Certification.

Any person may inspect the application in person at the FAA office listed above under **FOR FURTHER INFORMATION CONTACT**.

In addition, any person may, upon request, inspect the application, notice and other documents germane to the application in person at the Springfield-Branson Regional Airport.

Issued in Kansas City, Missouri on August 22, 1995.

George A. Hendon,

Manager, Airports Division, Central Region.

[FR Doc. 95–21430 Filed 8–28–95; 8:45 am]

BILLING CODE 4910–13–M

Research and Special Programs Administration

[Docket No. P–95–1W; Notice 2]

Alyeska Pipeline Service Co.; Transportation of Hazardous Liquid by Pipeline, Grant of Waiver

SUMMARY: Alyeska Pipeline Service Company (Alyeska) is being granted a waiver by the Research and Special Programs Administration (RSPA) which will amend the August 16, 1975, waiver (Docket No. Pet. 75–13W) from compliance with the coating and cathodic protection requirements of 49 CFR 195.238(a)(5) and 195.242(a) for buried pump station and terminal insulated piping.

EFFECTIVE DATE: August 29, 1995.

FOR FURTHER INFORMATION CONTACT: L.E. Herrick, 202–366–5523 regarding the subject matter of this notice or the Dockets Branch, 202–366–5046, regarding copies of this notice or other material that is referenced herein.

SUPPLEMENTARY INFORMATION: On June 7, 1995, RSPA published a notice in the **Federal Register** (60 FR 30153, June 7, 1995) proposing to issue a waiver to Alyeska amending the existing waiver covering procedures for thermally insulated pump station and terminal piping. Public comment on the proposal was requested. No comments were received. Therefore, RSPA is granting the waiver as proposed.

Background

By letter dated November 24, 1975, Alyeska requested a waiver from compliance with the coating and cathodic protection requirements of 49 CFR 195.238(a)(5) and 195.242(a) for thermally insulated pump station and terminal piping on the Trans-Alaska Pipeline System (TAPS). 49 CFR 195.238(a)(5) requires that each component in a hazardous liquid pipeline that is to be buried or submerged must have an external protective coating that supports any supplemental cathodic protection. In addition, if an insulating-type coating is used, it must have low moisture absorption and provide high electrical resistence. 49 CFR 195.242(a) requires that a cathodic protection system be installed for all buried or submerged hazardous liquid facilities to mitigate corrosion that might result in structural failure.

RSPA granted Alyeska this waiver on August 16, 1976, (Docket No. Pet. 75–13W) on the premise that the applied thermal insulation design would provide an equal level of corrosion protection. However, subsequent inspections of the insulated piping revealed that the annular insulation system has not been sufficiently effective in preventing external corrosion on portions of the buried piping.

Alyeska estimates 14,500 linear feet of piping was originally installed subject to the 1976 waiver. To date, Alyeska has rerouted approximately 11,000 linear feet of above-ground piping or installed cathodic protection with a design meeting the requirements of 195.238(a)(5) and 195.2424(a). In general, this rerouting or repair was in areas with the greatest corrosion. For the remaining approximately 3,500 feet of below-ground insulated piping, RSPA will prohibit any further use of the thermal insulation design installed during original construction of the pipeline and to amend the waiver on the existing insulated piping with the following stipulations:

1. At Pump Station No. 1. Alyeska will install in 1995, an insulated box containing cathodic protection on approximately 450 feet of 48-inch mainline piping and will complete tie-in of the 2-inch fuel gas separator drain line. This will complete the installation of cathodic protection for all active piping at Pump Station No. 1 that is subject to 49 CFR 195.

2. At Pump Station No. 2. Alyeska will conduct annual sample inspections of approximately 220 feet of piping for injurious corrosion and will repair as required until Pump Station No. 2 is removed from service.

3. At Pump Station No. 5. The piping subject to this amendment is approximately 1,490 feet. Alyeska will either:

A. Install insulated boxes containing cathodic protection or move the piping above-ground by December 31, 1996, or;

B. If Alyeska determines by September 1995 that Pump Station No. 5 will be removed from service prior to December 31, 1999, Alyeska will continue to perform annual sample inspections for corrosion and repair as required until Pump Station No. 5 is removed from service.

4. At the North Pole Meter Station. The North Pole Meter Station piping subject to this amendment and extension is approximately 560 feet between the 48-inch mainline and the meter building. Alyeska will either:

A. Conduct sample inspections for corrosion in 1995 and provide cathodic protection to the existing 8-inch crude supply and 6-inch residuum return piping by December 31, 1996; or

B. Upgrade the meter station connection and replace with new larger diameter piping meeting 49 CFR Part 195 requirements by December 31, 1996.

5. At transition piping at pump stations and at the Valdez Marine Terminal (VMT). The above-ground insulated piping that transitions to below-ground non-insulated piping occurs at the seven non-permafrost stations (Pump Stations No. 4 and Nos. 7–12) and the VMT. Typical repairs consist of removal of the below-ground insulation and coating, followed by replacement of the coating and the outer mechanical protective layer. Alyeska will repair and complete inspections of ten percent of the insulated transitions at each of the affected pump stations and at VMT by the end of 1995.

Inspections of ten percent of the transitions were completed at Pump Stations 4, 9, and 12 in 1994 with the following results: At PS–4, two transitions inspected with no corrosion; at PS–9, three transitions inspected, two with no corrosion and one with slight corrosion with a .065 inch pit; and at PS–12, three transitions inspected with no corrosion at two locations and less than .030 inch pitting at the other location. A total of five transitions were inspected at the VMT in 1994 (a total of five per cent) with no corrosion found at any location.

In 1995, Alyeska will conduct inspections of ten percent of the transitions at Pump Stations Nos. 7, 8, 10, and 11 and an additional five transitions at the VMT. Alyeska will continue an inspection and repair program based on the results of these and future inspections. Transition piping subject to this amendment is approximately 800 feet.

For the purpose of this amendment, sample inspect or sample inspection means to excavate and expose a portion of a line segment, typically 3 to 20 feet in length, for the purpose of visual examination and measurement of corrosion. Portions of pipe segments with no external inspection history will be given priority. The reinspection frequency will be based on the severity of the corrosion found, line service, and pipe accessibility. The maximum interval for sample inspection will not exceed five years.

Injurious corrosion means corrosion to the extent that replacement or repair is required as determined by 49 CFR 195.416(h). Repair means structural repair of piping and/or coating repairs.

In view of these reasons and those stated in the foregoing discussion, RSPA, by this order, finds that a waiver of compliance with 49 CFR 195.238(a)(5) and 195.242(a) is consistent with pipeline safety. Accordingly, Alyeska Pipeline Service Company's petition from compliance with the above stipulations is hereby granted.

Issued in Washington, D.C. on August 23, 1995.

Richard B. Felder,

Associate Administrator for Pipeline Safety.

[FR Doc. 95–21344 Filed 8–28–95; 8:45 am]

BILLING CODE 4910–60–P–M

[Docket No. P–94–2W; Notice 2]

Alyeska Pipeline Service Company; Transportation of Hazardous Liquid by Pipeline, Grant of Waiver

SUMMARY: Alyeska Pipeline Service Company (Alyeska) is being granted a waiver by the Research and Special Programs Administration (RSPA) which will amend the May 19, 1975, waiver from compliance with the coating and cathodic protection requirements of 49 CFR 195.238(a)(5) and 195.242(a) for buried mainline insulated piping.

EFFECTIVE DATE: August 29, 1995.

FOR FURTHER INFORMATION CONTACT: L.E. Herrick, 202–366–5523 regarding the subject matter of this notice or the Dockets Unit, 202–366–5046, regarding copies of this notice or other material that is referenced herein.

SUPPLEMENTARY INFORMATION: On June 7, 1995, RSPA published a notice in the **Federal Register** (60 FR 30153, June 7, 1995) proposing to issue a waiver to Alyeska amending the existing waiver on mainline piping corrosion control operations. Public comment on the proposal was requested. No comments were received. Therefore, RSPA is granting the waiver as proposed.

Background

By letters dated March 19 and May 3, 1975, Alyeska requested a waiver from compliance with the coating and cathodic protection requirements of 49 CFR 195.238(a)(5) and 195.242(a) with respect to thermally insulated mainline piping on the Trans-Alaska Pipeline System (TAPS). 49 CFR 195.238(a)(5) requires that each component in a hazardous liquid pipeline that is to be buried or submerged must have an external protective coating that supports any supplemental cathodic protection. In addition, if an insulating-type coating is used, it must have low moisture absorption and provide high electrical resistance. 49 CFR 195.242(a) requires that a cathodic protection system be installed for all buried or submerged hazardous liquid facilities to mitigate corrosion that might result in a structural failure.

The affected areas were specified as (1) three buried, refrigerated sections totalling 4.3 miles in length, (2) approximately 240 short buried transition sections, each approximately 60–80 feet in length, and (3) approximately 20 buried ''sag bend'' sections, each approximately 120 feet in length.

On May 19, 1975, RSPA granted Alyeska the requested waiver (Docket No. Pet. 75–41). The waiver was granted on the premise that the applied thermal insulation design would mitigate corrosion from occurring under the insulation. Although the thermal insulation design has been generally effective on the buried insulated mainline piping in preventing thawing of the permafrost and in preventing external corrosion that requires repair based on structural analysis of the pipe using methods prescribed by 49 CFR 195.416(h), the design has not prevented all corrosion from occurring.

During routine internal inspection tool corrosion surveys, Alyeska reported evidence of corrosion on 300 of 1,850 40-foot long pipe joints covered by the original waiver (16 percent). Alyeska reported this corrosion by letter to RSPA's Office of Pipeline Safety (OPS) on September 2, 1994. To date, all fifteen joints that have been excavated have been found to have noninjurious corrosion.

Accordingly, RSPA will prohibit further installation on TAPS of buried mainline piping coated with thermal insulation not meeting all coating and cathodic protection requirements of CFR 195.238(a)(5) and 195.242(a).

RSPA will allow Alyeska to continue under the original waiver for the coating and catholic protection requirements of CFR 195.238(a)(5) and 195.242(a) for existing insulated piping, subject to the following:

1. Alyeska will continue to inspect all thermally insulated mainline pipe by a program of annual internal inspection tool corrosion surveys capable of detecting and assessing potentially injurious corrosion. Alyeska will conduct the next internal inspection tool corrosion survey during the spring of 1996, a period of approximately 18 months from the previous survey. This is a one-time deviation from an annual schedule.

Subsequent internal inspection tool surveys will continue to be conducted annually until OPS determines from the technical data presented by Alyeska that a reduced monitoring frequency is justified.

2. If evaluation of the internal inspection tool corrosion survey data indicates areas of potentially injurious corrosion:

A. An excavation and evaluation of actual corrosion found shall be made in accordance with CFR 195.416(h) to determine if repairs are necessary.

B. Structural repairs, if required, shall be made in accordance with requirements of ASME B31.4 and Alyeska's Maintenance and Repair Manual (MR–48).

C. Recoating and cathodic protection of excavated piping shall be applied in accordance with the requirements of 49 CFR 195.238(a)(5) and 195.242(a).

3. Alyeska shall submit to OPS the following engineering studies which may provide the technical basis for future modification of this waiver.

A. A detailed study of all insulated joints with identified corrosion, including a comparison with joints previously identified as being corroded. Results will be used to evaluate the ability of the internal inspection tools used on the TAPS to reliably and repeatably detect, measure, and assess corrosion that may impact structural integrity. Results of this study may also be used to determine the most desirable location for at least one investigation of the corrosion mechanism described in item 3B below.

B. An analysis of mechanisms of corrosion under insulation to determine if the observed corrosion is active or inactive will be completed. This study will include review of internal inspection tool corrosion survey data, field observations from at least one dig, and laboratory testing to confirm corrosion mechanisms. Field testing may include the installation of corrosion monitoring devices such as electrical resistance probes or corrosion rate coupons.

C. No later than December 1, 1996, a feasibility study of remediation designs and options to be used for the effective control of corrosion under mainline insulated piping will be completed. A schedule will be provided so that OPS will have the opportunity to witness the internal inspection tool corrosion survey evaluation and installation of any remedial corrective systems.

In view of these reasons and those stated in the foregoing discussion, RSPA, by this order, finds that a waiver of compliance with 49 CFR 195.238(a)(5) and 195.242(a) is consistent with pipeline safety. Accordingly, Alyeska Pipeline Service Company's petition from compliance with the above stipulations is hereby granted.

Issued in Washington, D.C. on August 23, 1995.

Richard B. Felder,

Associate Administrator for Pipeline Safety.

[FR Doc. 95–21345 Filed 8–28–95; 8:45 am]

BILLING CODE 4910–60–P

DEPARTMENT OF THE TREASURY

Fiscal Service

[Dept. Circ. 570, 1994—Rev., Supp. No. 22]

Surety Companies Acceptable on Federal Bonds; Change of Name and Suspension of Authority

Lawyers Surety Corporation, a Texas corporation has formally changed its name to CENTURY AMERICAN CASUALTY COMPANY, effective November 4, 1994.

Notice is hereby given that the Certificate of Authority issued by the Treasury to CENTURY AMERICAN CASUALTY COMPANY, of Dallas, Texas, under the United States Code, Title 31, Sections 9304–9308, to qualify as an acceptable surety on Federal bonds was suspended, effective June 30, 1995. The suspension will remain in effect until further notice.

The Company was last listed as an acceptable surety on Federal bonds at 59 FR 34164, July 1, 1994. Federal bond-approving officers should annotate their reference copies of Treasury Circular 570 to reflect the suspension.

With respect to any bonds currently in force with CENTURY AMERICAN CASUALTY COMPANY, Federal bond-approving officers may let such bonds run to expiration and need not secure new bonds. However, no new bonds should be accepted from the Company. In addition, bonds that are continuous in nature should not be renewed.

Questions concerning this notice may be directed to the U.S. Department of the Treasury, Financial Management Service, Funds Management Division, Surety Bond Branch, 3700 East-West Highway, Room 6F04, Hyattsville, MD 20782, telephone (202) 874–7116.

Dated: August 18, 1995.

Charles F. Schwan III,

Director, Funds Management Division, Financial Management Service.

[FR Doc. 95–21435 Filed 8–28–95; 8:45 am]

BILLING CODE 4810–35–M

Office of Foreign Assets Control

List of Specially Designated Terrorists Who Threaten to Disrupt the Middle East Peace Process; Additional Name

AGENCY: Office of Foreign Assets Control, Treasury.

ACTION: Notice of Blocking.

SUMMARY: The Treasury Department is adding the name of an individual to the list of blocked persons who have been found to have committed, or to pose a risk of committing, acts of violence that have the purpose of disrupting the Middle East peace process or have assisted in, sponsored, or provided financial, material or technological support for, or service in support of, such acts of violence, or are owned or controlled by, or to act for or on behalf of other blocked persons.

EFFECTIVE DATE: August 29, 1995 or upon prior actual notice.

FOR FURTHER INFORMATION: Office of Foreign Assets Control, Department of the Treasury, 1500 Pennsylvania Ave., N.W., Washington, DC 20220; Tel.: (202) 622–2420.

SUPPLEMENTARY INFORMATION:

Electronic Availability

This document is available as an electronic file on *The Federal Bulletin Board* the day of publication in the **Federal Register**. By modem dial 202/512–1387 and type ''/GO FAC'' or call 202/512–1530 for disks or paper copies. This file is available for downloading in WordPerfect 5.1, ASCII, and Postscript formats. The document is also accessible for downloading in ASCII format without charge from Treasury's Electronic Library (''TEL'') in the ''Business, Trade and Labor Mall'' of the Fed World bulletin board. By modem dial 703/321–3339, and select self–expanding file ''T11FR00.EXE'' in TEL. For Internet access, use one of the following protocols: Telnet = fedworld.gov (192.239.93.3); World Wide Web (Home Page) = http://www.fedworld.gov; FTP = ftp.fedworld.gov (192.239.92.205).

Background

On January 23, 1995, President Clinton signed Executive Order 12947, ''Prohibiting Transactions with Terrorists Who Threaten to Disrupt the Middle East Peace Process'' (60 FR 5079, Jan. 25, 1995—the ''Order'' or ''E.O. 12947''). The Order blocks all property subject to U.S. jurisdiction in which there is any interest of 12 Middle East terrorist organizations included in an Annex to the Order. In addition, the Order blocks the property and interests in property of persons designated by the Secretary of State, in coordination with the Secretary of Treasury and the Attorney General, who are found 1) to have committed or to pose a significant risk of disrupting the Middle East peace process, or 2) to assist in, sponsor or provide financial, material, or technological support for, or services in support of, such acts of violence. The order further blocks all property and interests in property subject to U.S. jurisdiction in which there is any interest of persons determined by the Secretary of the Treasury, in coordination with the Secretary of State and the Attorney General, to be owned or controlled by, or to act for or on behalf of any other person designated pursuant to the Order (collectively ''Specially Designated Terrorists'' or ''SDTs'').

The order also prohibits any transaction or dealing by a United States person or within the United States in property or interests in property of SDTs, including the making or receiving of any contribution of funds, goods, or services to or for the benefit of such persons.

Designations of persons blocked pursuant to the Order are effective upon the date of determination by the Secretary of State or his delegate, or the Director of the Office of Foreign Assets Control acting under authority delegated by the Secretary of the Treasury. Public notice of blocking is effective upon the date of publication in the Federal Register, or upon prior actual notice.

The following name is added to the list of Specially Designated Terrorists:

ABU MARZOOK, Mousa Mohammed (a.k.a. MARZUK, Musa Abu) (a.k.a. ABU–MARZUQ, Dr. Musa) (a.k.a. MARZOOK, Mousa Mohamed Abou) (a.k.a. ABU–MARZUQ, Sa'id) (a.k.a. ABU–'UMAR), Political Leader in Amman, Jordan and Damascus, Syria for HAMAS; DOB 09 February 1951; POB Gaza, Egypt; Passport No. 92/664 (Egypt); SSN 523-33-8386.

Dated: August 16, 1995.

R. Richard Newcomb,

Director, Office of Foreign Assets Control.

Approved: 21, 1995.

John P. Simpson,

Deputy Assistant Secretary (Regulatory, Tariff & Trade Enforcement).

[FR Doc. 95–21325 Filed 8–23–95; 4:17 pm]

BILLING CODE 4810–25–F

Sunshine Act Meetings

Federal Register
Vol. 60, No. 167
Tuesday, August 29, 1995

This section of the FEDERAL REGISTER contains notices of meetings published under the ''Government in the Sunshine Act'' (Pub. L. 94-409) 5 U.S.C. 552b(e)(3).

BOARD OF GOVERNORS OF THE FEDERAL RESERVE SYSTEM

TIME AND DATE: 11:00 a.m., Tuesday, September 5, 1995.

PLACE: Marriner S. Eccles Federal Reserve Board Building, C Street entrance between 20th and 21st Streets, NW., Washington, DC 20551.

STATUS: Closed.

MATTERS TO BE CONSIDERED:

1. Personnel actions (appointments, promotions, assignments, reassignments, and salary actions) involving individual Federal Reserve System employees.
2. Any items carried forward from a previously announced meeting.

CONTACT PERSON FOR MORE INFORMATION: Mr. Joseph R. Coyne, Assistant to the Board; (202) 452–3204. You may call (202) 452–3207, beginning at approximately 5 p.m. two business days before this meeting, for a recorded announcement of bank and bank holding company applications scheduled for the meeting.

Dated: August 25, 1995.

Jennifer J. Johnson,

Deputy Secretary of the Board.

[FR Doc. 95–21566 Filed 8–25–95; 3:01 pm]

BILLING CODE 6210–01–P

NUCLEAR REGULATORY COMMISSION

DATE: Weeks of August 28, September 4, 11, and 18, 1995.

PLACE: Commissioners' Conference Room, 11555 Rockville Pike, Rockville, Maryland.

STATUS: Public.

MATTERS TO BE CONSIDERED:

Week of August 28

Wednesday, August 30

11:30 a.m.—Affirmation Session (Public Meeting)

a. Revisions to Regulatory Requirements for Reactor Pressure Vessel Integrity in 10 CFR Part 50 (Tentative)
b. Final Amendments to 10 CFR Parts 20 and 35 on Medical Administration of Radiation and Radioactive Materials (Tentative)
c. Final Amendments to 10 CFR Part 50, Appendix J, ''Containment Leakage Testing,'' to Adopt Performance-Oriented and Risk-Based Approaches (Tentative) (Postponed from August 22) (Contact: Andrew Bates, 301–415–1963)

Week of September—Tentative

There are no meetings scheduled for the Week of September 4.

Week of September 11—Tentative

Monday, September 11

1:30 p.m.—Briefing on Status of Watts Bar Licensing (Public Meeting) (Contact: Steve Varga, 301–415–1403)

Tuesday, September 12

10:30 a.m. and 1:30 p.m.—All Employees Meeting (Public Meetings) on ''The Green'' Plaza Area between buildings at White Flint (Contact: Beth Hayden, 301–415–8200)

Week of September 18—Tentative

There are no meetings scheduled for the Week of September 18.

Note.—The Nuclear Regulatory Commission is operating under a delegation of authority to Chairman Shirley A. Jackson, because with three vacancies on the Commission, it is temporarily without a quorum. As a legal matter, therefore, the Sunshine Act does not apply; but in the interests of openness and public accountability, the Commission will conduct business as though the Sunshine Act were applicable.

*The Schedule for Commission Meetings is Subject to Change on Short Notice. To Verify the Status of Meetings Call (Recording)—(301) 415–1292. Contact Person for More Information: Bill Hill (301) 415–1661.

This notice is distributed by mail to several hundred subscribers; if you no longer wish to receive it, or would like to be added to it, please contact the Office of the Secretary, Attn: Operations Branch, Washington, D.C. 20555 (301–415–1963).

In addition, distribution of this meeting notice over the internet system is available. If you are interested in receiving this Commission meeting schedule electronically, please send an electronic message to alb@nrc.gov or gkt@nrc.gov.

August 24, 1995.

William M. Hill, Jr.,

SECY Tracking Officer, Office of the Secretary.

[FR Doc. 95–21563 Filed 8–25–95; 2:23 pm]

BILLING CODE 7590–01–M

NATIONAL TRANSPORTATION SAFETY BOARD

TIME AND DATE: 9:30 a.m., Thursday, September 7, 1995.

PLACE: THE BOARD ROOM, 5TH FLOOR, 490 L'ENFANT PLAZA, S.W., WASHINGTON, D.C. 20594.

STATUS: The first item is open to the public. The last item is closed to the public under Exemption 10 of the Government in Sunshine Act.

MATTERS TO BE CONSIDERED:

614A—Railroad Accident Report: Collision and Derailment Involving Three Burlington Northern Freight Trains near Thedford, Nebraska, on June 8, 1994

6578—Opinion and Order: Neel v. Administrator, Docket SE–13573; disposition of applicant's appeal

News Media Contact: Telephone : (202) 382–0660

FOR MORE INFORMATION CONTACT: Bea Hardesty, (202) 382–6252.

August 25, 1995.

Bea Hardesty

Federal Register Liaison Officer

[FR Doc. 95–21517 Filed 8–25–95; 2:19 pm]

BILLING CODE 7533–01–P

federal register

Tuesday
August 29, 1995

Part II

State Justice Institute

Guidelines for Grants, Cooperative Agreements, and Contracts: Notice

STATE JUSTICE INSTITUTE

Grant Guideline

AGENCY: State Justice Institute.

ACTION: Proposed Grant Guideline.

SUMMARY: This Guideline sets forth the administrative, programmatic, and financial requirements attendant to Fiscal Year 1996 State Justice Institute grants, cooperative agreements, and contracts.

DATES: The Institute invites public comment on the Guideline until September 28, 1995.

ADDRESSES: Comments should be sent to the State Justice Institute, 1650 King St. (Suite 600), Alexandria, VA 22314.

FOR FURTHER INFORMATION CONTACT: David I. Tevelin, Executive Director; Richard Van Duizend, Deputy Director; or Katie Ames, Publications Coordinator, State Justice Institute, 1650 King St. (Suite 600), Alexandria, VA 22314, (703) 684–6100.

SUPPLEMENTARY INFORMATION: Pursuant to the State Justice Institute Act of 1984, 42 U.S.C. 10701, et seq., as amended, the Institute is authorized to award grants, cooperative agreements, and contracts to State and local courts, nonprofit organizations, and others for the purpose of improving the administration of justice in the State courts of the United States.

Status of FY 1996 Appropriations

At the time of publication, the status of SJI's fiscal year 1996 Congressional appropriation is uncertain. In H.R. 2076, the House of Representatives voted to eliminate funding for the Institute in FY 1996; the Senate Appropriations Subcommittee on Commerce, Justice, State, the Judiciary, and Related Agencies chaired by Senator Phil Gramm is scheduled to consider the bill shortly after Labor Day. The grant program proposed in this Guideline and the funding targets noted for specific programs are contingent on the availability of appropriations in FY 1996 at about the same $13.55 million level that SJI has received from Congress each of the past four fiscal years. Subject to the availability of funds to support a grant program in FY 1996, publication of the Final Grant Guideline is scheduled for approximately October 16, 1995.

Types of Grants Available and Funding Schedules

The SJI grant program is designed to be responsive to the most important needs of the State courts. To meet the full range of the courts' diverse needs, the Institute offers six different types of grants. The types of grants available in FY 1996 and the funding cycles for each program are provided below:

Project Grants. These grants are awarded to support education, research, demonstration, and technical assistance projects to improve the administration of justice in the State courts. With limited exceptions (see sections II.B.2.b.ii., II.B.2.b.v., and II.C.), project grants are intended to support innovative projects of national significance. As provided in section V. of the Guideline, project grants may ordinarily not exceed $300,000 a year; however, grants in excess of $200,000 are likely to be awarded only to support projects likely to have a significant national impact. Applicants must ordinarily submit a concept paper (see section VI.) and an application (see section VII.) in order to obtain a project grant.

As indicated in Section VI.C., the Board may make an ''accelerated'' grant of less than $40,000 on the basis of the concept paper alone when the need for the project is clear and little additional information about the operation of the project would be provided in an application.

The FY 1996 mailing deadline for project grant concept papers is November 28, 1995. Papers must be postmarked or bear other evidence of submission by that date. With the exceptions noted immediately below, the FY 1996 funding cycle will be substantially similar to the FY 1995 cycle: The Board will meet in early March, 1996 to invite formal applications based on the most promising concept papers; applications will be due in May; and awards will be approved by the Board in July.

The exceptions to this schedule pertain to proposals to follow up on national conferences SJI has supported or will be supporting in 1995. Concept papers following up on the March 1995 National Conference on Eliminating Race and Ethnic Bias in the Courts must be mailed by October 6, 1995. See section II.B.2.i. (This deadline was announced in the Institute's FY 1995 Grant Guideline.) The Board of Directors will consider those papers at its December 1995 Board meeting and invite applications to be mailed by January 19 for consideration at its March 1996 meeting.

Concept papers following up on three other conferences to be held this fall must be mailed by March 8, 1996. Those conferences are the National Town Hall Meeting on Improving Public Confidence in the Courts to be held October 14–15, 1995 (see section II.B.2.a.iii.); the National Interbranch Conference on Funding the State Courts to be held September 27–October 1, 1995 (see section II.B.2.d.iv.); and the National Drug Court Symposium to be held December 3–6, 1995 (see section II.B.2.h). These concept papers will be considered at the Board's April 1996 meeting. Applications must be submitted by June 14 for consideration at the Board's July 1996 meeting.

Package Grants. This grant program permits applicants to submit one concept paper (or application) for a ''package'' of related grants rather than separate proposals for each related component of the package. Package grants of up to $750,000 per year may be awarded to support projects that address interrelated topics or the core elements of a multifaceted program, or that require the services of all or some of the same key staff persons. Package grants must enhance not merely maintain) an applicant's services and must otherwise meet the Institutes grant criteria. The Board retains the discretion to support all, none, or selected portions of the proposed package. Package grant concept papers and applications will be considered on the same schedule as project grants. See sections III.J., V.C. and D., VI.A.2.b. and 3.b., VIIA.3., VII.C., and VII.D. for more information about package grants.

Technical Assistance Grants. Under this program, a State or local court may receive a grant of up to $30,000 to engage outside experts to provide technical assistance to diagnose, develop, and implement a response to a jurisdiction's problems. The Guideline allocates up to $600,000 in FY 1996 funds to support technical assistance grants. See section II.C.2.

Curriculum Adaptation Grants. A grant of up to $20,000 may be awarded to a State or local court to replicate or modify a model training program developed with SJI funds. The Guideline allocates up to $250,000 for these grants in FY 1996. See section II.B.2.b.ii.

Letters requesting Curriculum Adaptation grants may be submitted at any time during the fiscal year. However, in order to permit the Institute sufficient time to evaluate these proposals, letters must be submitted no later than 90 days before the projected date of the training program. See section II.B.2.b.ii.(c).

Scholarships. The Guideline allocates up to $250,000 of FY 1996 funds for scholarships to enable judges and court managers to attend out-of-State education and training programs. See section II.B.2.b.v.

The Guideline establishes four deadlines for scholarship requests:

November 1, 1995 for training programs beginning between January 12 and April 12, 1996; February 1, 1996 for programs beginning between April 13 and July 12, 1996; April 15, 1996 for programs beginning between July 13 and September 30, 1996; and July 15, 1996 for programs beginning between October 1 and December 31, 1996.

Renewal Grants. There are two types of renewal grants available from SJI: Continuation grants (see sections III.G., V.C. and D., and IX.A.) and On-going support grants (see sections III.H., V.C. and D., and IX.B.). Continuation grants are intended to support limited duration projects that involve the same type of activities as the original project. On-going support grants may be awarded for up to a three-year period to support national-scope projects that provide the State courts with critically needed services, programs, or products.

The Guideline establishes a target for renewal grants of no more than $3 million, a little more than 25% of the total amount available for grants in FY 1996. See section IX. Grantees should accordingly be aware that the award of a grant to support a project does not constitute a commitment to provide either continuation funding or on-going support.

An applicant for a continuation or on-going support grant must submit a letter notifying the Institute of its intent to seek such funding, no later than 120 days before the end of the current grant period. The Institute will then notify the applicant of the deadline for its renewal grant application. See section IX.

Special Interest Categories

The Guideline contains 13 Special Interest categories, i.e., those project areas that the Board has identified as being of particular importance to the State courts. The Institute has always sought extensive advice about the special interest categories from judges, court administrators, lawyers, members of the public, and other groups interested in the administration of justice. In order to more systematically obtain advice from the court community this year, SJI sent a survey to more than 400 court leaders across the nation asking, among other things, for their guidance about the Institute's funding priorities for FY 1996.

The respondents suggested that the Institute accord the following topics the highest funding priority next fiscal year; Public confidence in the courts'; application of technology; children and families in court; education and training; family violence and the courts; alternative dispute resolution; court financing; and delay and expense reduction. All of these topics are addressed in the proposed Guideline; the first six are specific special interest categories.

In addition, survey respondents expressed an interest in having Institute grants more fully explore ways to improve the ''quality of justice'' provide by the American legal system. The Guideline addresses that issue in section II.B.2.a.ii.

Two new categories are proposed for addition this year: Responding Effectively to the Court-Related Needs of Mentally Disabled Persons (II.B.2.j.) and Improving the Security of Courthouses, Judges, Jurors, and Witnesses (II.B.2.m.) One FY 1995 category—Assessing the Impact of Health Care-Related Issues on the State Courts—is proposed for elimination. Two categories—Education and Training for Judges and Other Key Court Personnel (II.B.2.b.) and Children and Families in Court (II.B.2.e.)—have been significantly reorganized.

In response to the results of the survey and the suggestions of grantees, the proposed Guideline also includes several minor technical changes to clarify and simplify the grant process.

Recommendations to Grant Writers

Over the past 9 years, Institute staff have reviewed approximately 3,000 concept papers and 1,400 applications. On the basis of those reviews, inquiries from applicants, and the views of the Board, the Institute offers the following recommendations to help potential applicants present workable, understandable proposals that can meet the funding criteria set forth in this Guideline.

The Institute suggests that applicants make certain that they address the questions and issues set forth below when preparing a concept paper or application.

Concept papers and applications should, however, be presented in the formats specified in sections VI. and VII. of the guideline, respectively.

1. *What is the subject or problem you wish to address?* Describe the subject or problem and how it affects the courts and the public. Discuss how your approach will improve the situation or advance the state of the art or knowledge, and explain why it is the most appropriate approach to take. When statistics or research findings are cited to support a statement or position, the source of the citation should be referenced in a footnote or a reference list.

2. *What do you want to do?* Explain the goal(s) of the project in simple, straightforward terms. The goals should describe the intended consequences or expected overall effect of the proposed project (e.g., to enable judges to sentence drug-abusing offenders more effectively, or to dispose of civil cases within 24 months), rather than the tasks or activities to be conducted (e.g., hold three training sessions, or install a new computer system).

To the greatest extent possible, an applicant should avoid a specialized vocabulary that is not readily understood by the general public. Technical jargon does not enhance a paper.

3. *How will you do it?* Describe the methodology carefully so that what you propose to do and how you would do it are clear. All proposed tasks should be set forth so that a reviewer can see a logical progression of tasks and relate those tasks directly to the accomplishment of the project's goal(s). When in doubt about whether to provide a more detailed explanation or to assume a particular level of knowledge or expertise on the part of the reviewers, provide the additional information. A description of project tasks also will help identify necessary budget items. All staff positions and project costs should relate directly to the tasks described. The Institute encourages applicants to attach letters of cooperation and support from the courts and related agencies that will be involved in or directly affected by the proposed project.

4. *How will you know it works?* Include an evaluation component that will determine whether the proposed training, procedure, service, or technology accomplished the objectives it was designed to meet. Concept papers and applications should describe the criteria that will be used to evaluate the project's effectiveness and identify program elements which will require further modification. The description in the application should include how the evaluation will be conducted, when it will occur during the project period, who will conduct it, and what specific measures will be used. In most instances, the evaluation should be conducted by persons not connected with the implementation of the procedure, training, service, or technique, or the administration of the project.

The Institute has also prepared a more thorough list of recommendations to grant writers regarding the development of project evaluation plans. Those recommendations are available from the Institute upon request.

5. *How will others find out about it?* Include a plan to disseminate the results of the training, research, or demonstration beyond the jurisdictions

and individuals directly affected by the project. The plan should identify the specific methods which will be used to inform the field about the project, such as the publication of law review or journal articles, or the distribution of key materials. A statement that a report or research findings ''will be made available to'' the field is not sufficient. The specific means of distribution or dissemination as well as the types of recipients should be identified. Reproduction and dissemination costs are allowable budget items.

6. *What are the specific costs invoved?* The budget in both concept papers and applications should be presented clearly. Major budget categories such as personnel, benefits, travel, supplies, equipment, and indirect costs should be identified separately. The components of ''Other'' or ''Miscellaneous'' items should be specified in the application budget narrative, and should not include set-asides for undefined contingencies.

7. *What, if any, match is being offered?* Courts and other units of State and local government (not including publicly-supported institutions of higher education) are required by the State Justice Institute Act to contribute a match (cash, non-cash, or both) of not less than 50 percent of the grant funds requested from the Institute. All other applicants also are encouraged to provide a matching contribution to assist in meeting the costs of a project.

The match requirement works as follows: If, for example, the total cost of a project is anticipated to be $150,000, a State or local court or executive branch agency may request up to $100,000 from the Institute to implement the project. The remaining $50,000 (50% of the $100,000 requested from SJI) must be provided as match.

Cash match includes funds directly contributed to the project by the applicant, or by other public or private sources. It does not include income generated from tuition fees or the sale of project products. Non-cash match refers to in-kind contributions by the applicant, or other public or private sources. This includes, for example, the monetary value of time contributed by existing personnel or members of an advisory committee (but not the time spent by participants in an educational program attending program sessions). When match is offered, the nature of the match (cash or in-kind) should be explained and, at the application stage, the tasks and line items for which costs will be covered wholly or in part by match should be specified.

8. *Which of the two budget forms should be used?* Section VII.A.3. of the SJI Grant Guideline encourages use of the spreadsheet format of Form C1 if the funding request exceeds $100,000. Form C1 also works well for projects with discrete tasks, regardless of the dollar value of the project. Form C, the tabular format, is preferred for projects lacking a number of discrete tasks, or for projects requiring less than $100,000 of Institute funding. Generally, use the form that best lends itself to representing most accurately the budget estimates for the project.

9. *How much detail should be included in the budget narrative?* The budget narrative of an application should provide the basis for computing all project-related costs, as indicated in section VII.D. of the SJI Grant Guideline. To avoid common shortcomings of application budget narratives, include the following information:

- Personnel estimates that accurately provide the amount of time to be spent by personnel involved with the project and the total associated costs, including current salaries for the designated personnel (e.g., Project Director, 50% for one year, annual salary of $50,000=$25,000). If salary costs are computed using an hourly or daily rate, the annual salary and number of hours or days in a work-year should be shown.
- Estimates for supplies and expenses supported by a complete description of the supplies to be used, nature and extent of printing to be done, anticipated telephone charges, and other common expenditures, with the basis for computing the estimates included (e.g., 100 reports × 75 pages each × .05/page=$375.00). Supply and expense estimates offered simply as ''based on experience'' are not sufficient.

In order to expedite Institute review of the budget, make a final comparison of the amounts listed in the budget narrative with those listed on the budget form. In the rush to complete all parts of the application on time, there may be many last-minute changes; unfortunately, when there are discrepancies between the budget narrative and the budget form or the amount listed on the application cover sheet, it is not possible for the Institute to verify the amount of the request. A final check of the numbers on the form against those in the narrative will preclude such confusion. The Institute will provide an illustrative budget and budget form upon request.

10. *What travel regulations apply to the budget estimates?* Transportation costs and per diem rates must comply with the policies of the applicant organization, and a copy of the applicant's travel policy should be submitted as an appendix to the application. If the applicant does not have a travel policy established in writing, then travel rates must be consistent with those established by the Institute or the Federal Government (a copy of the Institute's travel policy is available upon request). The budget narrative should state which regulations are in force for the project and should include the estimated fare, the number of persons traveling, the number of trips to be taken, and the length of stay. The estimated costs of travel, lodging, ground transportation, and other subsistence should be listed separately. When combined, the subtotals for these categories should equal the estimate listed on the budget form.

11. *May grant funds be used to purchase equipment?* Generally, grant funds may be used to purchase only the equipment that is necessary to demonstrate a new technological application in a court, or that is otherwise essential to accomplishing the objectives of the project. Equipment purchases to support basic court operations ordinarily will not be approved. The budget narrative must list the equipment to be purchased and explain why the equipment is necessary to the success of the project. Written prior approval of the Institute is required when the amount of computer hardware to be purchased or leased exceeds $10,000, or the software to be purchased exceeds $3,000.

12. *To what extent may indirect costs be included in the budget estimates?* It is the policy of the Institute that all costs should be budgeted directly; however, if an applicant has an indirect cost rate that has been approved by a Federal agency within the last two years, an indirect cost recovery estimate may be included in the budget. A copy of the approved rate agreement should be submitted as an appendix to the application.

If an applicant does not have an approved rate agreement, an indirect cost rate proposal should be prepared in accordance with Section XI.H.4. of the Grant Guideline, based on the applicant's audited financial statements for the prior fiscal year. (Applicants lacking an audit should budget all project costs directly.) If an indirect cost rate proposal is to be submitted, the budget should reflect estimates based on that proposal. Obviously, this requires that the proposal be completed at the time of application so that the appropriate estimates may be included; however, grantees have until three months after the project start date to submit the indirect cost proposal to the Institute for approval. An indirect cost rate worksheet on computer diskette is

available from the Institute upon request.

13. *Does the budget truly reflect all costs required to complete the project?* After preparing the program narrative portion of the application, applicants may find it helpful to list all the major tasks or activities required by the proposed project, including the preparation of products, and note the individual expenses, including personnel time, related to each. This will help to ensure that, for all tasks described in the application (e.g., development of a videotape, research site visits, distribution of a final report), the related costs appear in the budget and are explained correctly in the budget narrative.

Recommendations To Grantees

The Institute's staff works with grantees to help assure the smooth operation of the project and compliance with the SJI Guidelines. On the basis of monitoring more than 1000 grants, the Institute staff offers the following suggestions to aid grantees in meeting the administrative and substantive requirements of their grants.

1. *After the grant has been awarded, when are the first quarterly reports due?* Quarterly Progress Reports and Financial Status Reports must be submitted within 30 days after the end of every calendar quarter—i.e., no later than January 30, April 30, July 30, and October 30—regardless of the project's start date. The reporting periods covered by each quarterly report end 30 days before the respective deadline for the report. When an award period begins December 1, for example, the first Quarterly Progress Report describing project activities between December 1 and December 31 will be due on January 30. A Financial Status Report should be submitted even if funds have not been obligated or expended.

By documenting what has happened over the past three months, Quarterly Progress Reports provide an opportunity for project staff and Institute staff to resolve any questions before they become problems, and make any necessary changes in the project time schedule, budget allocations, etc. Thus, the Quarterly Project Report should describe project activities, their relationship to the approved timeline, and any problems encountered and how they were resolved, and outline the tasks scheduled for the coming quarter. It is helpful to attach copies of relevant memos, draft products, or other requested information. An original and one copy of a Quarterly Progress Report and attachments should be submitted to the Institute.

Additional Quarterly Progress Report or Financial Status Report forms may be obtained from the grantee's Program Manager at SJI, or photocopies may be made from the supply received with the award.

2. *Do reporting requirements differ for renewal grants or package grants?* Recipients of a continuation, on-going support, or package grant are required to submit quarterly progress and financial status reports on the same schedule and with the same information as recipients of a grant for a single new project.

A continuation grant and each yearly grant under an on-going support award should be considered as a separate phase of the project. The reports should be numbered on a grant rather than project basis. Thus, the first quarterly report filed under a continuation grant or a yearly increment of an on-going support award should be designated as number one, the second as number two, and so on, through the final progress and financial status reports due within 90 days after the end of the grant period.

Recipients of a package grant should file a summary Financial Status Report covering the entire package as well as separate financial reports for each of the projects in the package, identified by letter of the alphabet (e.g., SJI–93–15R–J–001–A; SJI–93–15R–J–001–B; SJI–93–15R–J–001–C).

3. *What information about project activities should be communicated to SJI?* In general, grantees should provide prior notice of critical project events such as advisory board meetings or training sessions so that the Institute Program Manager can attend if possible. If methodological, schedule, staff, budget allocations, or other significant changes become necessary, the grantee should contact the Program Manager prior to implementing any of these changes, so that possible questions may be addressed in advance. Questions concerning the financial requirements section of the Guideline, quarterly financial reporting or payment requests, should be addressed to the Grants Financial Manager listed in the award letter.

It is helpful to include the grant number assigned to the award on all correspondence to the Institute.

4. *Why is it important to address the special conditions that are attached to the award document?* In some instances, a list of special conditions is attached to the award document. The special conditions are imposed to establish a schedule for reporting certain key information, to assure that the Institute has an opportunity to offer suggestions at critical stages of the project, and to provide reminders of some, but not all of the requirements contained in the Grant Guideline. Accordingly, it is important for grantees to check the special conditions carefully and discuss with their Program Manager any questions or problems they may have with the conditions. Most concerns about timing, response time, and the level of detail required can be resolved in advance through a telephone conversation. The Institute's primary concern is to work with grantees to assure that their projects accomplish their objectives, not to enforce rigid bureaucratic requirements. However, if a grantee fails to comply with a special condition or with other grant requirements, the Institute may, after proper notice, suspend payment of grant funds or terminate the grant.

Sections X., XI., and XII. of the Grant Guideline contain the Institute's administrative and financial requirements. Institute Finance and Management Division staff are always available to answer questions and provide assistance regarding these provisions.

5. *What is a Grant Adjustment?* A Grant Adjustment is the Institute's form for acknowledging the satisfaction of special conditions, or approving changes in grant activities, schedule, staffing, sites, or budget allocations requested by the project director. It also may be used to correct errors in grant documents, add small amounts to a grant award, or deobligate funds from the grant.

6. *What schedule should be followed in submitting requests for reimbursements or advance payments?* Requests for reimbursements or advance payments may be made at any time after the project start date and before the end of the 90-day close-out period. However, the Institute follows the U.S. Treasury's policy limiting advances to the minimum amount required to meet immediate cash needs. Given normal processing time, grantees should not seek to draw down funds for periods greater than 30 days from the date of the request.

7. *Do procedures for submitting requests for reimbursement or advance payment differ for renewal grants or package grants?* The basic procedures are the same for any grant. A continuation grant or the yearly grant under an on-going support award should be considered as a separate phase of the project. Payment requests should be numbered on a grant rather than a project basis. Thus, the first request for funds from a continuation grant or a yearly increment under an on-going support award should be designated as number one, the second as

number two, and so on through the final payment request for that grant.

Recipients of a package grant should file separate requests for each project in the package. For example, if there are three projects within a package grant, a grantee should prepare three separate payment requests, each identified by the letter of the alphabet designated in the award document (e.g., SJI–93–15R–J–001–A; SJI–93–15R–J–001–B; SJI–93–15R–J–001–C). Subsequent payment requests should be numbered consecutively for each project within the package (e.g., project SJI–93–15R–J–001–A payment number 2; SJI–93–15R–J–001–B payment number 4; etc.).

8. *If things change during the grant period, can funds be reallocated from one budget category to another?* The Institute recognizes that some flexibility is required in implementing a project design and budget. Thus, grantees may shift funds among direct cost budget categories. When any one reallocation or the cumulative total of reallocations are expected to exceed five percent of the approved project budget, a grantee must specify the proposed changes, explain the reasons for the changes, and request Institute approval.

The same standard applies to renewal grants and package grants. In addition, prior written Institute approval is required to shift leftover funds from the original award to cover activities to be conducted under the renewal award, or to use renewal grant monies to cover costs incurred during the original grant period. Prior written Institute approval also is needed to shift funds between projects included in a package grant.

9. *What is the 90-day close-out period?* Following the last day of the grant, a 90-day period is provided to allow for all grant-related bills to be received and posted, and grant funds drawn down to cover these expenses. No obligations of grant funds may be incurred during this period. The last day on which an expenditure of grant funds can be obligated is the end date of the grant period. Similarly, the 90-day period is not intended as an opportunity to finish and disseminate grant products. This should occur before the end of the grant period.

Starting the day after the end of the award period, and during the following 90 days, all monies that have been obligated should be expended. All payment requests must be received by the end of the 90-day ''close-out-period.'' Any unexpended monies held by the grantee that remain after the 90-day follow-up period must be returned to the Institute. Any funds remaining in the grant that have not been drawn down by the grantee will be deobligated.

10. *Are funds granted by SJI ''Federal'' funds?* The State Justice Institute Act provides that, except for purposes unrelated to this question, ''the Institute shall not be considered a department, agency, or instrumentality of the Federal Government.'' 42 U.S.C. § 10704(c)(1). Because SJI receives appropriations from Congress, some grantee auditors have reported SJI grants funds as ''Other Federal Assistance.'' This classification is acceptable to SJI but is not required.

11. *If SJI is not a Federal Agency, do OMB circulars apply with respect to audits?* Except to the extent that they are inconsistent with the express provisions of the SJI Grant Guideline, Office of Management and Budget (OMB) Circulars A–110, A–21, A–87, A–88, A–102, A–122, A–128 and A–133 are incorporated into the Grant Guideline by reference. Because the Institute's enabling legislation specifically requires the Institute to ''conduct, or require each recipient to provide for, an annual fiscal audit'' [see 42 U.S.C. § 10711(c)(1)], the Grant Guideline sets forth options for grantees to comply with this statutory requirement. (See Section XI.J.)

Prior to FY 1994, the Institute did not require grantees to comply with the audit-related provisions of OMB circulars A–110, A–128, or A–133, but did require that grantees, lacking an audit report prepared for a Federal agency, conduct an independent audit in compliance with generally accepted auditing standards established by the American Institute of Certified Public Accountants.

The current Guideline makes it clear that SJI will accept audits conducted in accordance with the Single Audit Act of 1984 and OMB Circulars A–128, or A–133, in satisfaction of the annual fiscal audit requirement. Grantees who are required to undertake these audits in conjunction with Federal grants may include SJI funds as part of the audit even if the receipt of SJI funds would not require such audits. This approach gives grantees an option to fold SJI funds into the governmental audit rather than to undertake a separate audit to satisfy SJI's Guideline requirements.

In sum, educational and nonprofit organizations that receive payments from the Institute that are sufficient to meet the applicability thresholds of OMB Circular A–133 must have their annual audit conducted in accordance with Government Auditing Standards issued by the Comptroller General of the United States rather than with generally accepted auditing standards. Grantees in this category that receive amounts below the minimum threshold referenced in Circular A–133 must also submit an annual audit to SJI, but they would have the option to conduct an audit of the entire grantee organization in accordance with generally accepted auditing standards; include SJI funds in an audit of Federal funds conducted in accordance with the Single Audit Act of 1984 and OMB Circulars A–128 or A–133; or conduct an audit of only the SJI funds in accordance with generally accepted auditing standards. (See Guideline Section XI.J.) A copy of the above-noted circulars may be obtained by calling OMB at (202) 395–7250.

12. *Does SJI have a CFDA number?* Auditors often request that a grantee provide the Institute's Catalog of Federal Domestic Assistance (CFDA) number for guidance in conducting an audit in accordance with Government Accounting Standards. Because SJI is not a Federal agency, it has not been issued such a number, and there are no additional compliance tests to satisfy under the Institute's audit requirements beyond those of a standard governmental audit.

Moreover, because SJI is not a Federal agency, SJI funds should not be aggregated with Federal funds to determine if the applicability threshold of Circular A–133 has been reached. For example, if in fiscal year 1996 grantee ''X'' received $10,000 in Federal funds from a Department of Justice (DOJ) grant program and $20,000 in grant funds from SJI, the minimum A–133 threshold would not be met. The same distinction would preclude an auditor from considering the additional SJI funds in determining what Federal requirements apply to the DOJ funds.

Grantees that are required to satisfy either the Single Audit Act, OMB Circulars A–128, or A–133 and who include SJI grant funds in those audits, need to remember that because of its status as a private non-profit corporation, SJI is not on routing lists of cognizant Federal agencies. Therefore, the grantee needs to submit a copy of the audit report prepared for such a cognizant Federal agency directly to SJI. The Institute's audit requirements may be found in Section XI.J. of the Grant Guideline.

The following Grant Guideline is proposed by the State Justice Institute for FY 1996:

State Justice Institute Grant Guideline

Table of Contents

I. Background
II. Scope of the program
III. Definitions
IV. Eligibility for award
V. Types of projects and grants; size of awards

VI. Concept paper submission requirements for new projects
VII. Application requirements for new projects
VIII. Application review procedures
IX. Renewal funding procedures and requirements
X. Compliance requirements
XI. Financial requirements
XII. Grant adjustments
Appendix I List of State contacts regarding administration of institute grants to State and local courts
Appendix II SJI libraries: Designated sites and contacts
Appendix III Judicial education scholarship application forms
Appendix IV Preliminary budget form
Appendix V Certificate of State approval form
Appendix VI Illustrative list of model curricula

Summary

This Guideline sets forth the programmatic, financial, and administrative requirements of grants, cooperative agreements, and contracts awarded by the State Justice Institute. The Institute, a private, nonprofit corporation established by an Act of Congress, is authorized to award grants, cooperative agreements, and contracts to improve the administration and quality of justice in the State courts.

Grants may be awarded to State and local courts and their agencies; national nonprofit organizations controlled by, operating in conjunction with, and serving the judicial branch of State governments; and national nonprofit organizations for the education and training of judges and support personnel of the judicial branch of State governments. The Institute may also award grants to other nonprofit organizations with expertise in judicial administration; institutions of higher education; individuals, partnerships, firms, or corporations; and private agencies with expertise in judicial administration if the objectives of the funded program can be better served by such an entity. Funds may be awarded, as well, to Federal, State or local agencies and institutions other than courts for services that cannot be provided adequately through nongovernmental arrangements. In addition, the Institute may provide financial assistance in the form of interagency agreements with other grantors.

The Institute will consider applications for funding support that address any of the areas specified in its enabling legislation, as amended. However, the Board of Directors of the Institute has designated certain program categories as being of special interest.

The Institute has established one round of competition for FY 1996 funds. The concept paper submission deadline for all but four specific funding categories is November 28, 1995. Concept papers to implement the plans developed at the March 1995 National Conference on Eliminating Race and Ethnic Bias in the Courts must be mailed by October 6, 1995. Concept papers to follow up on the National Interbranch Conference on Funding the State Courts, the National Town Hall Meeting on Improving Public Confidence in the Courts, and the National Symposium on the Implementation and Operation of Drug Courts must be submitted by March 8, 1996.

It is anticipated that between $11 million and $11.5 million will be available for award. This Guideline applies to all concept papers and applications submitted, as well as grants awarded in FY 1996.

The awards made by the State Justice Institute are governed by the requirements of this Guideline and the authority conferred by Pub. L. 98–620, Title II, 42 U.S.C. 10701, *et seq.*, as amended.

I. Background

The Institute was established by Pub. L. 98–620 to improve the administration of justice in the State courts in the United States. Incorporated in the State of Virginia as a private, nonprofit corporation, the Institute is charged, by statute, with the responsibility to:

A. Direct a national program of financial assistance designed to assure that each citizen of the United States is provided ready access to a fair and effective system of justice;

B. Foster coordination and cooperation with the Federal judiciary;

C. Promote recognition of the importance of the separation of powers doctrine to an independent judiciary; and

D. Encourage education for judges and support personnel of State court systems through national and State organizations, including universities.

To accomplish these broad objectives, the Institute is authorized to provide funds to State courts, national organizations which support and are supported by State courts, national judicial education organizations, and other organizations that can assist in improving the quality of justice in the State courts.

The Institute is supervised by an 11-member Board of Directors appointed by the President, by and with the consent of the Senate. The Board is statutorily composed of six judges, a State court administrator, and four members of the public, no more than two of whom can be of the same political party.

Through the award of grants, contracts, and cooperative agreements, the Institute is authorized to perform the following activities:

A. Support research, demonstrations, special projects, technical assistance, and training to improve the administration of justice in the State courts;

B. Provide for the preparation, publication, and dissemination of information regarding State judicial systems;

C. Participate in joint projects with Federal agencies and other private grantors;

D. Evaluate or provide for the evaluation of programs and projects funded by the Institute to determine their impact upon the quality of criminal, civil, and juvenile justice and the extent to which they have contributed to improving the quality of justice in the State courts;

E. Encourage and assist in furthering judicial education;

F. Encourage, assist, and serve in a consulting capacity to State and local justice system agencies in the development, maintenance, and coordination of criminal, civil, and juvenile justice programs and services; and

G. Be responsible for the certification of national programs that are intended to aid and improve State judicial systems.

II. Scope of the Program

During FY 1996, the Institute will consider applications for funding support that address any of the areas specified in its enabling legislation. The Board, however, has designated certain program categories as being of ''special interest.'' See section II.B.

A. Authorized Program Areas

The Institute is authorized to fund projects addressing one or more of the following program areas listed in the State Justice Institute Act, the Battered Women's Testimony Act of 1992, the Judicial Training and Research for Child Custody Litigation Act of 1992, the International Parental Kidnapping Crime Act of 1993, and the Violent Crime Reduction Act of 1994.

1. Assistance to State and local court systems in establishing appropriate procedures for the selection and removal of judges and other court personnel and in determining appropriate levels of compensation;

2. Education and training programs for judges and other court personnel for

the performance of their general duties and for specialized functions, and national and regional conferences and seminars for the dissemination of information on new developments and innovative techniques;

3. Research on alternative means for using judicial and nonjudicial personnel in court decisionmaking activities, implementation of demonstration programs to test such innovative approaches, and evaluations of their effectiveness;

4. Studies of the appropriateness and efficacy of court organizations and financing structures in particular States, and support to States to implement plans for improved court organization and financing;

5. Support for State court planning and budgeting staffs and the provision of technical assistance in resource allocation and service forecasting techniques;

6. Studies of the adequacy of court management systems in State and local courts, and implementation and evaluation of innovative responses to records management, data processing, court personnel management, reporting and transcription of court proceedings, and juror utilization and management;

7. Collection and compilation of statistical data and other information on the work of the courts and on the work of other agencies which relate to and affect the work of courts;

8. Studies of the causes of trial and appellate court delay in resolving cases, and establishing and evaluating experimental programs for reducing case processing time;

9. Development and testing of methods for measuring the performance of judges and courts and experiments in the use of such measures to improve the functioning of judges and the courts;

10. Studies of court rules and procedures, discovery devices, and evidentiary standards to identify problems with the operation of such rules, procedures, devices, and standards; and the development of alternative approaches to better reconcile the requirements of due process with the need for swift and certain justice, and testing of the utility of those alternative approaches;

11. Studies of the outcomes of cases in selected areas to identify instances in which the substance of justice meted out by the courts diverges from public expectations of fairness, consistency, or equity; and the development, testing and evaluation of alternative approaches to resolving cases in such problem areas;

12. Support for programs to increase court responsiveness to the needs of citizens through citizen education, improvement of court treatment of witnesses, victims, and jurors, and development of procedures for obtaining and using measures of public satisfaction with court processes to improve court performance;

13. Testing and evaluating experimental approaches to provide increased citizen access to justice, including processes which reduce the cost of litigating common grievances and alternative techniques and mechanisms for resolving disputes between citizens;

14. Collection and analysis of information regarding the admissibility and quality of expert testimony on the experiences of battered women offered as part of the defense in criminal cases under State law, as well as sources of and methods to obtain funds to pay costs incurred to provide such testimony, particularly in cases involving indigent women defendants;

15. Development of training materials to assist battered women, operators of domestic violence shelters, battered women's advocates, and attorneys to use expert testimony on the experiences of battered women in appropriate cases, and individuals with expertise in the experiences of battered women to develop skills appropriate to providing such testimony;

16. Research regarding State judicial decisions relating to child custody litigation involving domestic violence;

17. Development of training curricula to assist State courts to develop an understanding of, and appropriate responses to child custody litigation involving domestic violence;

18. Dissemination of information and training materials and provision of technical assistance regarding the issues listed in paragraphs 14–17 above;

19. Development of national, regional, and in-State training and educational programs dealing with criminal and civil aspects of interstate and international parental child abduction;

20. Development, testing, presentation, and dissemination of model educational programs and materials for judges and court personnel on the nature and incidence of rape, sexual assault, incest, child sexual abuse, domestic violence, and other gender-related violent crimes; the impact of such crimes on the victim and on society; the evolution and application of the laws governing those crimes; the attitudes toward those crimes including the stereotypes of the victims; the sentencing of persons convicted of those crimes; the use of expert testimony regarding the effects on victims of those crimes; the application of rape shield laws and other limits on the introduction of evidence; and the interpretation of defenses based on self-defense or provoked responses by victims of rape, sexual assault, incest, child sexual abuse, domestic violence, and other gender-related crimes of violence.

21. Other programs, consistent with the purposes of the State Justice Institute Act, as may be deemed appropriate by the Institute, including projects dealing with the relationship between Federal and State court systems in areas where there is concurrent State-Federal jurisdiction and where Federal courts, directly or indirectly, review State court proceedings.

Funds will *not* be made available for the ordinary, routine operation of court systems or programs in any of these areas.

B. Special Interest Program Categories

1. General Description

The Institute is interested in funding both innovative programs and programs of proven merit that can be replicated in other jurisdictions. Although applications in any of the statutory program areas are eligible for funding in FY 1996, the Institute is especially interested in funding those projects that:

a. Formulate new procedures and techniques, or creatively enhance existing arrangements to improve the courts;

b. Address aspects of the State judicial systems that are in special need of serious attention;

c. Have national significance in terms of their impact or replicability in that they develop products, services, and techniques that may be used in other States; and

d. Create and disseminate products that effectively transfer the information and ideas developed to relevant audiences in State and local judicial systems or provide technical assistance to facilitate the adaptation of effective programs and procedures in other State and local jurisdictions.

A project will be identified as a ''Special Interest'' project if it meets the four criteria set forth above and (1) it falls within the scope of the ''special interest'' program areas designated below, or (2) information coming to the attention of the Institute from the State courts, their affiliated organizations, the research literature, or other sources demonstrates that the project responds to another special need or interest of the State courts.

Concept papers and applications which address a ''Special Interest'' category will be accorded a preference

in the rating process. (See the selection criteria listed in sections VI.B., ''Concept Paper Submission Requirements for New Projects,'' and VIII.B., ''Application Review Procedures.'')

2. Specific Categories

The Board has designated the areas set forth below as ''Special Interest'' program categories. The order of listing does not imply any ordering of priorities among the categories.

a. *Improving Public Confidence in the Courts.* This category includes research, demonstration, evaluation and education projects designed to improve the responsiveness of courts to public concerns regarding the fairness, accessibility, timeliness, and comprehensibility of the court process, and to test innovative methods for increasing the public's confidence in the State courts.

i. The Institute is particularly interested in supporting innovative projects that examine, develop, and test methods that trial or appellate courts may use to:

- Improve service to individual litigants and trial participants, including innovative methods for handling cases involving unrepresented litigants fairly and effectively;
- Test methods for more clearly and effectively communicating decisions and the reasons for them to litigants and the public;
- Address court-community problems resulting from the influx of legal and illegal immigrants, including projects to define the impact of immigration on State courts; design and assess procedures for use in custody, visitation, and other domestic relations cases when key family members or property are outside the United States; facilitate communication with Federal authorities when illegal aliens are involved in State court proceedings; and develop protocols to facilitate service of process, the enforcement of orders of judgment, and the disposition of criminal and juvenile cases when a non-U.S. citizen or corporation is involved; and
- Increase public understanding of jury decisions and the juror selection and service and service process; foster positive attitudes toward jury service; and enhance the attractiveness of juror service through, e.g., incentives to participate, modifications of terms of service, and/or juror orientation and education programs.

Institute funds may not be used to directly or indirectly support legal representation of individuals in specific cases. In addition, it is unlikely that the Institute will continue to support development or testing of additional automated kiosks such as those being used by the courts in Arizona, California, Florida and New York.

ii. The Institute also is interested in supporting projects designed to improve the quality of justice including those testing methods for improving court operations based on the research examining ''procedural'' and ''distributive'' justice, and those assessing the impact of live television coverage of trials on court proceedings, public understanding, and fairness to litigants.

iii. The Institute is sponsoring a National Town Hall Meeting on Improving Public Confidence in the Courts that will be convened, via a videoconference, in 17 sites across the country on October 13–14, 1995. During the one-and-one-half day meeting, the downlink sites will tailor the Town Hall Meeting activities to the concerns of the local court constituencies. Information about the National Town Hall Meeting may be obtained from the National Center for State Courts (P.O. Box 8798, Williamsburg, VA 23187–8798, 804–253–2000) and the American Judicature Society (25 E. Washington Street, Suite 1600, Chicago, IL 60602, 312–558–6900).

The Institute is interested in supporting projects that implement the findings, recommendations, strategies, and action plans developed through the National Town Hall Meeting. In order to provide participants with sufficient time to plan such projects, a special funding cycle is establishing. Concept papers proposing projects to follow-up on the National Town Hall Meeting must be mailed by March 8, 1996. They will be reviewed by the Institute's Board of Directors on April 19–20, 1996. Applications based on these papers will be considered by the Board on July 26–27, 1996.

Previous SJI-supported projects that address these issues include: evaluation of an experimental community court in New York City; development of a manual for management of court interpretation services and materials for training and assisting court interpreters; development of interpreter certification tests in Russian and Hmong; development of touchscreen computer systems, videotapes, and written materials to assist pro se litigants; a demonstration of the use of volunteers to monitor guardianships; studies of effective and efficient methods for providing legal representation to indigent parties in criminal and family cases and the applicability of various dispute resolution procedures to different cultural groups; guidelines for court-annexed day care systems; and development of a manual for implementing innovations in jury selection, use, and management; technical assistance and training to facilitate implementation of the Standards on Jury Management; development of a guide for making juries accessible to persons with disabilities.

b. *Education and Training for Judges and Other Key Court Personnel.* The Institute continues to be interested in supporting an array of projects to strengthen and broaden the availability of court education programs at the State, regional, and national levels. Accordingly, this category is divided into five subsections: (i) Development of Innovative Educational Programs; (ii) Curriculum Adaptation Projects; (iii) Judicial Education Technical Assistance; (iv) Conferences; and (v) Scholarships. All Institute-supported conferences and education and training seminars should be accessible to persons with disabilities in accordance with the Americans with Disabilities Act.

i. *Development of Innovative Educational Programs.* This category includes support for the development and testing of educational programs for judges or court personnel that address key substantive and administrative issues of concern to the nation's courts, or assist local courts or State court systems to develop or enhance their capacity to deliver quality continuing education. Programs may be designed for presentation at the local, State, regional, or national level. Ordinarily, court education programs should be based on some form of assessment of the needs of the target audience; include clearly stated learning objectives that delineate the new knowledge or skills that participants will acquire; incorporate adult education principles and varying teaching/learning methods; and result in the development of a curriculum as defined in section III.K.

The Institute is particularly interested in the development of education programs that:

- Offer or comprise a portion of a comprehensive course of study that includes seminars or materials for judges or court personnel at various stages of their careers;
- Include self-directed learning packages such as those using interactive computer-programs, videos, or other visual media supported by written materials or manuals, or distance-learning approaches that could help local courts in creating organization-wide continuing learning opportunities

and assist those who do not have ready access to classroom-centered programs;

• Are interdisciplinary or involve collaboration between the judicial and other branches of government or between courts within a metropolitan area or multi-State region;

• Develop judicial leadership abilities, improve teamwork within a court, and enhance service to the public by a court;

• Familiarize faculty with the effective use of technology in presenting information; or

• Incorporate the findings from SJI-supported demonstration, evaluation, or research projects.

ii. *Curriculum Adaptation Projects.*

(a) *Description of the Program.* The Board is reserving up to $250,000 to provide support for adaptation and implementation of model curricula and/or model training programs previously developed with SJI support. The exact amount to be awarded for curriculum adaptation grants will depend on the number and quality of the applications submitted in this category and other categories of the Guideline.

The goal of the Curriculum Adaptation Program is to provide State and local courts with sufficient support to prepare and test a model curriculum, course module, national or regional conference program, or other model education program developed with SJI funds by any other State or national organization which has been modified to meet a State's or local jurisdiction's educational needs. Generally, it is anticipated that the adapted curriculum would become part of the grantee's ongoing education offerings, and that local instructors would receive the training needed to enable them to make future presentations of the curriculum. An illustrative list of the curricula that may be appropriate for the adaptation is contained in Appendix VI.

Only State or local courts may apply for Curriculum Adaptation funding. Grants to support adaptation of educational programs previously developed with SJI funds are limited to no more than $20,000 each. As with other awards to State or local courts, cash or in-kind match must be provided equal to at least 50% of the grant amount requested.

(b) *Review Criteria.* Curriculum Adaptation grants will be awarded on the basis of criteria including: the goals and objectives of the proposed project; the need for outside funding to support the program; the likelihood of effective implementation; the appropriateness of the educational approach in achieving the project's educational objectives; the likelihood of effective implementation and integration into the State's or local jurisdiction's ongoing educational programming; and expressions of interest by the judges and/or court personnel who would be directly involved in or affected by the project. In making implementation awards, the Institute will also consider factors such as the reasonableness of the amount requested, compliance with the statutory match requirements, diversity of subject matter, geographic diversity, the level of appropriations available in the current year, and the amount expected to be available in succeeding fiscal years.

(c) *Application Procedures.* In lieu of concept papers and formal applications, applicants for grants may submit, at any time, a detailed letter, and three photocopies. Although there is no prescribed form for the letter nor a minimum or maximum page limit, letters of application should include the following information to assure that each of the criteria for evaluating applications is addressed:

• *Project Description.* What are the project's goals and learning objectives? What is the title of the model curriculum to be tried? Who developed it? What program components would be implemented, and what benefits would be derived from this test? Why is this education program needed at the present time? Who will be responsible for adapting the model curriculum, and what types of modifications, if any, in length, format, and content are anticipated? Who will the participants be, how will they be recruited, and from where will they come (e.g., from across the State, from a single local jurisdiction, from a multi-State region)? How many participants are anticipated?

• *Need for Funding.* Why cannot State or local resources fully support the modification and presentation of the model curriculum? What is the potential for replicating or integrating the program in the future using State or local funds, once it has been successfully adapted and tested?

• *Likelihood of Implementation.* What is the proposed timeline for modifying and presenting the program? Who would serve as faculty and how were they selected? How will the presentation of the program be evaluated and by whom? (Ordinarily, an outside evaluation is not necessary; however, the results of any participant evaluation should be included in the final report.) What measures will be taken to facilitate subsequent presentations of the adapted program?

• *Expressions of Interest by Judges and/or Court Personnel.* Does the proposed program have the support of the court system leadership, and of judges, court managers, and judicial education personnel who are expected to attend? (This may be demonstrated by attaching letters of support.)

• *Budget and Matching State Contribution.* Applicants should attach a copy of budget Form E (see Appendix IV) and a budget narrative (see Section VII.B) that describes the basis for the computation of all project-related costs and the source of the match offered.

• Local courts should attach a concurrence signed by the Chief Justice of the State or his or her designee. (See Form B, Appendix V.)

Letters of application may be submitted at any time. However, applicants should allow at least 90 days between the date of submission and the date of the proposed program to allow sufficient time for needed planning. The Board of Directors has delegated its authority to approve Curriculum Adaptation grants to its Judicial Education Committee. The committee anticipates acting upon applications within 45 days after receipt. Formal grant awards will be made only after committee approval and negotiation of the final terms of the grant.

(d) *Grantee Responsibilities.* A recipient of a Curriculum Adaptation grant must:

(1) Comply with the same quarterly reporting requirements as other Institute grantees (see Section X.L., infra);

(2) Include in each grant product a prominent acknowledgment that support was received from the Institute, along with the ''SJI'' logo, and a disclaimer paragraph based on the example provided in section X.Q. of the Guideline; and

(3) Submit two copies of the manuals, handbooks, or conference packets developed under the grant at the conclusion of the grant period, along with a final report that includes evaluation results and explains how it intends to replicate the program in the future.

Applicants seeking other types of funding for developing and testing educational programs must comply with the requirements for concept papers and applications set forth in Sections VI and VII or the requirements for renewal applications set forth in Section IX.

iii. *Judicial Education Technical Assistance.* Unlike the preceding categories which support the development and delivery of court education programs, ''Technical Assistance'' refers to services which will support the acquisition of adult education and other expertise needed to prepare individual courses or multi-course curricula, or develop and

administer comprehensive ongoing judicial education programs for judges and court personnel. Projects in this category should focus on the needs of the States, and applicants should demonstrate their ability to work effectively with State judicial educators.

The Institute is currently funding the following judicial education technical assistance projects: the Judicial Education Reference Information and Technology Transfer Project (JERITT), which collects and disseminates information, and provides technical assistance on continuing education programs for judges and court personnel; the Judicial Education/Adult Education Project (JEAEP), which provides expert assistance on the application of adult and continuing education theory and practices to court education programs; the Leadership Institute in Judicial Education, which offers an annual training program and follow-up assistance to State judicial education leadership teams to help them develop improved approaches to court education; and NASJE NEWS, a newsletter of the National Association of State Judicial Educators.

iv. *Conferences.* This category includes support for regional or national conferences on topics of major concern to the State judiciary and court personnel. Applicants are encouraged to consider the use of videoconferencing and other technologies to increase participation and limit travel expenses in planning and presenting conferences. Applicants also are reminded that conference sites should be accessible to persons with disabilities in accordance with the Americans With Disabilities Act. In planning a conference, applicants should provide for a written, video, or other product that would widely disseminate the information, findings, and any recommendations resulting from the conference.

v. *Scholarships for Judges and Court Personnel.* The Institute is reserving up to $250,000 to support a scholarship program for State court judges and court managers.

(a) *Program Description/Scholarship Amounts.* The purposes of the Institute scholarship program are to: enhance the knowledge, skills, and abilities of judges and court managers; enable State court judges and court managers to attend out-of-State educational programs sponsored by national and State providers that they could not otherwise attend because of limited State, local and personal budgets; and provide States, judicial educators, and the Institute with evaluative information on a range of judicial and court-related education programs.

Scholarships will be granted to individuals only for the purpose of attending an out-of-State educational program within the United States. The annual or midyear meeting of a State or national organization of which the applicant is a member does not qualify as an out-of-State educational program for scholarship purposes, even though it may include workshops or other training sessions.

A scholarship may cover the cost of tuition and travel up to a maximum total of $1,500 per scholarship. (Transportation expenses include round-trip coach airfare or train fare.) Recipients who drive to the site of the program may receive $.30/mile up to the amount of the advanced purchase round-trip airfare between their home and the program site. Funds to pay tuition and transportation expenses in excess of $1,500, and other costs of attending the program such as lodging, meals, materials, and local transportation (including rental cars) at the site of the education program, must be obtained from other sources or be borne by the scholarship recipient.

Scholarship recipients are encouraged to check with their tax advisor to determine whether the scholarship constitutes taxable income under Federal and State law.

(b) *Eligibility Requirements.* Because of the limited amount of funds available, scholarships can be awarded only to full-time judges of State or local trial and appellate courts; to full-time professional, State or local court personnel with management responsibilities; and to supervisory and management probation personnel in judicial branch probation offices. Senior judges, part-time judges, quasi-judicial hearing officers, State administrative law judges, staff attorneys, law clerks, line staff, law enforcement officers, and other executive branch personnel will not be eligible to receive a scholarship.

(c) *Application Procedures.* Judges and court managers interested in receiving a scholarship must submit the Institute's Judicial Education Scholarship Application Form (Form S1, see Appendix III). Applications must be submitted by:

November 1, 1995, for programs beginning between January 12, and April 12, 1996;

February 1, 1996, for programs beginning between April 13 and July 12, 1996;

April 15, 1996, for programs beginning between July 13 and September 30, 1996; and

July 15, 1996, for programs beginning between October 1, and December 31, 1996.

No exceptions or extensions will be granted.

(d) *Concurrence Requirement. All scholarship applicants must obtain the written concurrence of the Chief Justice of his or her State's Supreme Court (or the Chief Justice's designee) on the Institute's Judicial Education Scholarship Concurrence form (Form S2, see Appendix III).* Court managers, other than elected clerks of court, also should submit a letter of support from their supervisor. The Concurrence form (Form S2) may accompany the application or be sent separately. However, the original signed Concurrence form must be received by the Institute within two weeks after the appropriate application mailing deadline (i.e. by November 15, 1995, or February 15, April 30, or July 30, 1996). No application will be reviewed if a signed Concurrence has not been received by the required date.

(e) *Review Procedures/Selection Criteria.* The Board of Directors has delegated the authority to approve or deny scholarships to its Judicial Education Committee. The Institute intends to notify each applicant whose scholarship has been approved within 60 days after the relevant application deadline. The Committee will reserve sufficient funds each quarter to assure the availability of scholarships throughout the year.

The factors that the Institute will consider in selecting scholarship recipients are:

- The applicant's need for training in the particular course subject and how the applicant would apply the information/skills gained
- The benefits to the applicant's court or the State's court system that would be derived from the applicant's participation in the specific educational program, including a description of current legal, procedural, administrative, or other problems affecting the State's courts, related to topics to be addressed at the educational program (in addition to submission of a signed Form S2);
- The absence of educational programs in the applicant's State addressing the particular topic;
- How the applicant will disseminate the knowledge gained (e.g., by developing/teaching a course or providing inservice training for judges or court personnel at the State or local level);
- The length of time that the applicant intends to serve as a judge or court manager, assuming reelection or reappointment, where applicable;

- The likelihood that the applicant would be able to attend the program without a scholarship;
- The unavailability of State or local funds to cover the costs of attending the program;
- The quality of the educational program to be attended as demonstrated by the sponsoring organization's experience in judicial education, evaluations by participants or other professionals in the field, or prior SJI support for this or other programs sponsored by the organization;
- Geographic balance;
- The balance of scholarships among types of applicants and courts;
- The balance of scholarships among educational programs; and
- The level of appropriations available to the Institute in the current year and the amount expected to be available in succeeding fiscal years.

(f) *Responsibilities of Scholarship Recipients.* In order to receive the funds authorized by a scholarship award, recipients must submit a Scholarship Payment Voucher (Form S3) together with a tuition statement from the program sponsor, and a transportation fare receipt (or statement of the driving mileage to and from the recipient's home to the site of the educational program). Recipients also must submit to the Institute a certificate of attendance at the program and an evaluation of the educational program they attended. A copy of the evaluation also must be sent to the Chief Justice of their State.

A State or a local jurisdiction may impose additional requirements on scholarship recipients that are consistent with SJI's criteria and requirements, e.g., a requirement to serve as faculty on the subject at a State- or locally- sponsored judicial education program.

c. *Dispute Resolution and the Courts.* This category includes education, research, evaluation, and demonstration projects addressing and expanding upon the findings and recommendations developed at the National Symposium on Court-Connected Dispute Resolution Research, conducted in Orlando in October 1993. The Institute is interested in projects that enhance the courts' ability to compare findings among research studies; address the nature and operation of ADR programs within the context of the court system as a whole; and compare dispute resolution processes to attorney settlement as well as trial. Among the topics of greatest interest are:

i. The structure of court-connected dispute resolution programs including such issues as the appropriate timing for referrals to dispute resolution services and the effects of implementing such referrals at various stages during litigation; the effect of different referral methods including any differences in outcome between voluntary and mandatory referrals; cultural issues including the nature of conflict in various cultural communities, different culturally-based perceptions of the ADR process, and the effect of the differences on outcomes; and the assessment of approaches that provide rural courts and other underserved areas with adequate court-connected dispute resolution services.

ii. The selection, qualifications and training of court-connected neutrals including evaluation of the effectiveness of different selection procedures; assessment of the effectiveness of different models of dispute resolution training and of various methods and criteria for determining; when people should be eliminated from the training process; and evaluation of methods courts can use to maintain and improve neutrals' skills and remove ineffective neutrals from the pool.

iii. Innovative uses of court-connected dispute resolution for resolving complex and multi-party cases including land-use litigation.

Applicants should be aware that the Institute will not provide operational support for on-going ADR programs or start-up costs of new but non-innovative ADR programs. Courts also should be advised that it is preferable for the applicant to support operational costs of a new innovative program, with Institute funds targeted to support related technical assistance, training, and evaluation needs.

In previous funding cycles, grants have been awarded to support evaluation of the use of mediation in civil, domestic relations, juvenile, probate, medical malpractice, appellate, and minor criminal cases. SJI grants also have supported assessments of the impact of early neutral evaluation of motor vehicle cases, the impact of private judging on State courts, multi-door courthouse programs, arbitration of civil cases, screening and intake procedures for mediation, the relationship between mediator qualifications and outcomes, and trial and appellate level civil settlement programs. In addition, SJI has supported the creation of a national ADR resource center; the preparation of a consumer guide to choosing a mediator; the development of training programs for judges; the testing of Statewide and trial court based ADR monitoring/evaluation systems and implementation manuals; the promulgation of principles and policies for court-connected neutrals; and technical assistance on implementation of multi-door courthouse programs, development of standards for court-annexed mediation programs, examination of the applicability of various dispute resolution procedures to different cultural groups, and creation of a national database of court-connected dispute resolution programs.

d. *Court Financing, Planning, and Management.* The Institute is interested in supporting activities that would enable courts to institutionalize long-range strategic planning processes, integrate and evaluate the long-term effects of complementary innovative management approaches, and test effective techniques for securing and managing the resources required to fully meet the responsibilities of the judicial branch. Among the types of projects that fall within this category are those to:

i. Institutionalize long-range planning approaches in individual States and local jurisdictions, including development of an ongoing internal capacity to conduct environmental scanning, trends analysis, and benchmarking;

ii. Evaluate the long-term effects of innovative management approaches, such as total quality management, designed to complement, enhance, or support use of a long-range strategic planning process. This includes the on-going, internal application of internal and external user evaluations of the quality of court services, and use of judicial performance evaluations as a means for assuring continuous improvement of court performance. Also included is the assessment of the advantages and disadvantages of privatizing court activities;

iii. Develop, present and evaluate the training necessary to enable judges and court staff to participate productively in the implementation or institutionalization of innovative management approaches other than total quality management, including training to enhance the ability of courts to develop effective plans for coping with natural or other disasters; and

iv. Develop and implement the ideas, issues, and recommendations arising from the National Interbranch Conference on Funding the State Courts held in Minneapolis on September 28–October 1, 1995, including the development, implementation, and evaluation of mechanisms for linking assessments of effectiveness such as the Trial Court Performance Standards to fiscal planning and budgeting, including service efforts and accomplishments approaches (SEA), performance audits,

and performance budgeting, and the testing of innovative programs and procedures for providing clear and open communications between the judicial and legislative branches of government.

In order to provide participants with sufficient time to plan such projects, a special funding cycle is established. Concept papers proposing projects to follow-up on the National Interbranch Conference on Funding the State Courts must be mailed by March 8, 1996. They will be reviewed by the Institute's Board of Directors on April 19–20, 1996. Applications based on these papers will be considered by the Board on July 26–27, 1996.

v. Develop accurate comparative information on retirement and other benefits offered to judges in each State.

The Institute has supported futures commissions in seven States. Because the Board of Directors believes that a sufficient variety of commission models now exists, the Institute will not support the development or implementation of any State futures commissions in FY 1996.

The Institute also has supported planning, futures, and innovative management projects including: national and Statewide ''future and the courts'' conferences and training; development of curricula, guidebooks and a video on visioning, and a long-range planning guide for trial courts; the provision of technical assistance to courts conducting futures and long-range planning activities, including development of a court futures network on Internet; a test of the feasibility of implementing the Trial Court Performance Standards in four States; the development of Appellate Court Performance Standards; and the application of total quality management principles to court operations, as well as the development of a TQM guidebook and training materials for trial courts.

e. *Children and Families in Court.* This category includes education, evaluation, technical assistance, and research projects to identify and inform judges of innovative, appropriate, and effective approaches for handling cases involving children and families. The Institute is particularly interested in projects to:

i. Assist the courts in addressing the special needs of children in cases involving family violence including the development and testing of innovative protocols, procedures, educational programs, and other measures for improving the capacity of courts to:

- Adjudicate child custody cases in which family violence may be involved;
- Determine and address the service needs of children exposed to family violence including the short- and long-term effects on children of exposure to family violence and the methods for mitigating those effects when issuing projection, custody, visitation, or other orders;
- Adjudicate and monitor child abuse and neglect litigation and reconcile the need to protect the child with the requirement to make reasonable efforts to maintain or reunite the family.

ii. Enhance the fairness and effectiveness of the process used to file, hear, and dispose of cases involving family violence, including projects to:

- Determine when it may be appropriate to refer a case involving family violence for mediation, and what procedures and safeguards should be employed;
- Assess the impact of family violence coordinating councils in improving the procedures and practices used by and the services available to courts in family violence cases, in order to identify techniques and procedures for improving their operation and effectiveness;
- Evaluate the effectiveness of the innovative programs, procedures, and strategies used by courts to improve their responsiveness to the needs of victims of family violence, and the fair and effective adjudication and disposition of cases involving family violence.

iii. Improve the effectiveness and operating efficiency of juvenile and family courts, including projects to:

- Develop information for judges and court staff on, and appropriate special procedures for determining release, protecting witnesses, adjudicating, and developing dispositions in cases involving gang members;
- Assess the role and effectiveness of courts with jurisdiction over juveniles and families in light of the upcoming 100th anniversary of the establishment of the first juvenile court, and identify the changes that may be needed as these courts enter the 21st century.
- Define the roles, enhance the training, and assure the effective use of guardians ad litem;
- Develop and test educational materials and curricula to assist judges in determining the best interest of a child when an adoption is contested;
- Improve the capacity of courts, regardless of structure, to expeditiously coordinate multiple cases involving members of the same family, and obtain and appropriately use social and psychological information gathered in one case involving a family member in a case involving another family member; and
- Improve the handling of the criminal and civil aspects of interstate and international parental child abductions.

In previous funding cycles, the Institute supported a national and a State symposium on courts, children, and the family; the development of protocols and a benchbook on the questioning of child witnesses; the preparation of educational materials on making reasonable efforts to preserve families, adjudicating allegations of child sexual abuse when custody is in dispute, child victimization, handling child abuse and neglect cases when parental substance abuse is involved, and on children as the silent victims of spousal abuse; and examinations of supervised visitation programs, effective court responses when domestic violence and custody disputes coincide, and foster care review procedures.

The Institute has also supported a national and several State conferences on family violence and the courts, as well as projects supporting the action plans developed at those conferences; preparation of descriptions of innovative court practices in family violence cases; evaluations of the use of court-ordered treatment for domestic violence offenders, alternatives to adjudication in child abuse and neglect cases, and the use of a court-enforced treatment program for batterers who are also substance abusers; the exploration of the policy issues related to the mediation of domestic relations cases involving allegations of family violence; the preparation of educational materials for judges on family violence issues; and the testing of videotapes and other educational programs for the parties in divorce actions and their children.

Finally, the Institute has supported a national symposium on enhancing coordination of cases involving the same family that are being heard in different courts; examinations to document the nature and extent of the coordination problem and demonstrations of innovative approaches for improving intra-court coordination; technical assistance to States considering establishment of a family court; development of a State-based training program for guardians ad litem; examinations of the authority of the juvenile court to enforce treatment orders and the role of juvenile court judges; and development of innovative approaches for coordinating services for children and youth.

f. *Application of Technology.* This category includes the testing of innovative applications of technology to improve the operation of court management systems and judicial

practices at both the trial and appellate court levels.

The Institute seeks to support local experiments with promising but untested applications of technology in the courts that include a structured evaluation of the impact of the technology in terms of costs, benefits, and staff workload, and an educational component to assure that the staff is appropriately informed regarding the purpose and use of the new technology. In this context, ''untested'' refers to novel applications of technology developed for the private sector and other fields that have not previously been applied to the courts.

The Institute is particularly interested in supporting efforts to determine what benefits and problems may occur as a result of courts entering the ''information superhighway,'' including projects to establish standards for judicial electronic data interchange (EDI); and local, Statewide, and/or interstate demonstrations of the courts' use of EDI (i.e., the exchange of documents or data in a computerized format that enables courts to process or perform work electronically on the documents received) beyond simple image transfer (facsimile or computer-imaging). In addition, the Institute is interested in demonstrations and evaluation of the effective use of management information systems to monitor, assess, and predict evolving court needs; and innovative information system links between courts and criminal justice, social service, and treatment agencies; as well as evaluations of innovative technologies highlighted at the Fourth National Conference on Court Technology held in Nashville in October 1994.

Ordinarily, the Institute will not provide support for the purchase of equipment or software in order to implement a technology that has been thoroughly tested in other jurisdictions such as the establishment of videolinks between courts and jails, the use of optical imaging for recordkeeping, and the creation of an automated management information system. (See section XI.H.2.b. regarding other limits on the use of grant funds to purchase equipment and software.)

In previous funding cycles, grants have been awarded to support:

Demonstration and evaluation of communications technology, e.g., interactive computerized information systems to assist pro se litigants; the use of FAX technology by courts; a multi-user ''system for judicial interchange'' designed to link disparate automated information systems and share court information among judicial system offices throughout a State without replacement of the various hardware and software environments which support individual courts; a computerized voice information system permitting parties to access by telephone information pertaining to their cases; an automated public information directory of courthouse facilities and services; an automated appellate court bulletin board; and a computer-integrated courtroom that provides full access to the judicial system for hearing-impaired jurors, witnesses, crime victims, litigants, attorneys, and judges.

Demonstration and evaluation of records technology, including: the development of a court management information display system; the integration of bar-coding technology with an existing automated case management system; an on-bench automated system for generating and processing court orders; an automated judicial education management system; testing of a document management system for small courts that uses imaging technology, and of automated telephone docketing for circuit-riding judges; and evaluation of the use of automated teller machines for paying jurors.

Court technology assistance services, e.g., circulation of a court technology bulletin designed to inform judges and court managers about the latest developments in court-related technologies; creation of a court technology laboratory to provide judges and court managers with the opportunity to test automated court-related systems; enhancement of a data base documenting automated systems currently in use in courts across the country; establishment of a technical information service to respond to specific inquiries concerning court-related technologies; development of court automation performance standards; and an assessment of programs that allow public access to electronically stored court information.

Grants also provided support for national court technology conferences; preparation of guidelines on privacy and public access to electronic court information and on court access to the information superhighway; the testing of a computerized citizen intake and referral service; development of an ''analytical judicial desktop system'' to assist judges in making sentencing decisions; implementation and evaluation of a Statewide automated integrated case docketing and record-keeping system; a prototype computerized benchbook using hypertext technology; and computer simulation models to assist State courts in evaluating potential strategies for improving civil caseflow.

g. *Resolution of Current Evidentiary Issues.* This category includes educational programs and other projects to assist judges in deciding questions regarding:

- The admissibility of new forms of demonstrative evidence, including computer simulations;
- The admissibility of testimony based on recovered memory, and the admissibility of expert testimony about memory recovery;
- The appropriate use of expert testimony regarding the application of rape shield laws and other limits on the introduction of evidence or the cross-examination of witnesses;
- The appropriate use of expert testimony in criminal cases concerning the impact on culpability of the prior victimization of the defendant; and
- Other complex evidentiary issues.

In previous funding cycles, the Institute has supported the development of a computer-assisted training program on evidentiary problems for juvenile and family court judges; training on medical/legal and scientific evidence issues; regional seminars on evidentiary questions; production of a videotape and other materials on scientific evidence; presentation of a workshop on the use of DNA evidence in criminal proceedings; and preparation of a benchbook for judges on the credibility, competence, and courtroom treatment of child witnesses as well as protocols for questioning child victims of crime.

h. *Substance Abuse.* On December 2–5, 1995, the Institute is supporting a National Symposium on the Implementation and Operation of Drug Courts. The Symposium, which will be held in Portland, Oregon, is designed to facilitate interchange among judges and court personnel, criminal justice practitioners, and substance abuse treatment professionals regarding the legal, philosophical, and operational issues related to designing, implementing, operating, and evaluating court-enforced substance abuse treatment programs. (For further information regarding the Symposium, please contact Caroline Cooper, Justice Programs Office, The American University, 4400 Massachusetts Avenue NW, Brandywine-Suite 660, Washington, DC 20016–8159, 202–885–2875.)

The Institute is interested in supporting projects that address the issues, findings, and recommendations resulting from the Symposium, including, but not limited to:

• The development and testing of educational programs for judges and court personnel concerning the management of treatment-based drug court programs;

• The examination of the judicial ethics concerns that may be involved in operating a treatment-based drug court program;

• The preparation of measures, forms, and other tools for self-evaluation of a treatment-based drug court program;

• The development and testing of innovative information systems to facilitate the efficient sharing of information between the court and the agencies and services involved in the operation of an effective treatment-based drug court program; and

• The evaluation of the applicability of court-enforced treatment programs to substance abuse-related cases involving juveniles and cases requiring treatment services in addition to substance abuse treatment (e.g., spousal abuse, child abuse, or mental health cases).

Concept papers proposing projects that fall within this category must be mailed by March 8, 1996.

The Institute will not fund projects focused on developing additional assessment tools, establishing court-enforced treatment programs for adult substance abusers, or providing support for basic court or treatment services.

The Institute is currently supporting the presentation of a National Symposium on the Implementation and Operation of Court-Enforced Drug Treatment Programs. In previous funding cycles, the Institute has sponsored a National Conference on Substance Abuse and the Courts, and State efforts to implement the plans developed at that Conference. It has also supported projects to evaluate: court-enforced treatment programs initiated by the Dade County, Florida, Pulaski County, Arkansas, and New York City courts; special court-ordered programs for women offenders, and other court-based alcohol and drug assessment programs; replicate the Dade County program in non-urban sites; assess the impact of legislation and court decisions dealing with drug-affected infants, and strategies for coping with increasing caseload pressures; develop a benchbook and other educational materials to assist judges in child abuse and neglect cases involving parental substance abuse and in developing appropriate sentences for pregnant substance abusers; test the use of a dual diagnostic treatment model for domestic violence cases in which substance abuse was a factor; and present local and regional educational programs for judges and other court personnel on substance abuse and its treatment.

The Institute and the Bureau of Justice Assistance (BJA) also are supporting two technical assistance projects: one by the National Center for State Courts to assist courts in implementing the plans developed at the National Conference; and the other by the American University Court Technical Assistance Project to identify successful drug case management strategies, conduct seminars on drug case management, and develop a guidebook for implementing drug case processing initiatives. In addition, the Institute and the Department of Health and Human Services' Center for Substance Abuse Treatment (CSAT) have extended an inter-agency agreement to conduct regional training programs for State judges and legislators on substance abuse treatment.

i. *Eliminating Race and Ethnic Bias in the Courts.* The Institute supported a National Conference on Eliminating Race and Ethnic Bias in the Courts that was held in March, 1995 in Albuquerque, New Mexico. Court teams from every State and nearly every Territory attended the Conference and prepared an action plan to address the bias-related issues of greatest concern in their jurisdiction.

The Institute has previously announced a special funding cycle for projects to assist in implementing the State action plans developed at the Conference. Concept papers submitted for this special cycle must be mailed by October 6, 1995. Interested jurisdictions unable to meet this deadline may submit concept papers for projects to implement State action plans as part of the Institute's regular funding cycle. (The deadline for submitting these papers is November 28, 1995.)

In addition, the Institute is interested in national, regional, and State education, demonstration, technical assistance, research, and evaluation projects addressing the non-State specific issues discussed during the Conference.

In previous funding cycles, the Institute has supported several projects to prepare and test curricula and other materials for judges, court personnel, and judicial education faculty on diversity and related issues; and provide information regarding the American justice system for non-English speakers, and improve the quality of court interpreting.

j. *Responding Effectively to the Court-Related Needs of Mentally Disabled Persons.* This category includes education, demonstration, research, evaluation, and technical assistance projects to assist courts in more effectively meeting the legal and service needs of persons with mental retardation or a mental illness in civil, criminal, family, juvenile, and probate proceedings. The Institute is particularly interested in the development of educational curricula and materials for judges and court personnel to improve their understanding of mental illness and mental retardation; the treatment and habiliation methods available to assist persons who have a mental illness or mental retardation inside and outside the courtroom, and how to access those services; the differing standards and burdens of proof applicable in civil commitment, guardianship, competency, and other proceedings in which the capacity to make knowing and voluntary decisions is at issue; and how indigent mentally ill or mentally retarded persons interface with public treatment, medical, social, and criminal justice agencies and draw on the services provided by those agencies.

In previous funding cycles, the Institute has supported national and State conferences on the court-related needs of persons who are elderly or disabled; the development and testing of effective programs for monitoring guardianships; and the preparation and testing of educational curricula on guardianship and court-related issues concerning mental retardation.

k. *Improving the Courts' Response to Gender-Related Crimes of Violence.* This category includes the development, testing, presentation, and dissemination of education programs for State, local, and Tribal court judges and court personnel on:

• The nature and incidence of stalking and other gender-related crimes of violence (e.g., rape, sexual assault, spousal abuse), and their impact on the victim and society;

• Sentencing decision-making in cases involving gender-related crimes of violence;

• The nature and impact of stereotypes applied to victims of gender-related crimes of violence;

• The use of self-defense and provocation defenses by alleged victims of gender-related violence accused of assaulting or killing their alleged abusers; and

• The effective use and enforcement of protective orders and the implications of mutual orders of protection.

Institute funds may not be used to provide operational support to programs offering direct services or compensation to victims of crimes.

In previous funding cycles, the Institute supported a national conference on family violence and the courts, and follow-up conferences and technical assistance in several States; development of curricula for judges on handling stranger and non-stranger rape and sexual assault cases and on family violence; evaluation of the effectiveness of court-ordered treatment for family violence offenders; a demonstration of ways to improve court processing of injunctions for protection and a study of ways to improve the effectiveness of civil protection orders for family violence victims; an examination of state-of-the-art court practices for handling family violence cases and of ways to improve access to rural courts for victims of family violence; and preparation of an analysis of the issues related to the use of expert testimony in criminal cases involving domestic violence.

l. *The Relationship Between State and Federal Courts.* This category includes education, research, demonstration, and evaluation projects designed to facilitate appropriate and effective communication, cooperation, and coordination between State and Federal courts. The Institute is particularly interested in innovative education, evaluation, demonstration, technical assistance, and research projects that:

i. Build upon the findings and recommendations made at the Institute-supported National Conference on the Management of Mass Tort Cases held in November, 1994. (A summary of the recommendations and findings from the conference was published in the Winter 1995 issue of *SJI NEWS*.)

ii. Develop and test curricula and other educational materials to:

- Illustrate effective methods being used at the trial court, State, and Circuit levels to coordinate cases and administrative activities; and
- Conduct regional conferences replicating the 1992 National Conference on State/Federal Judicial Relationships.

iii. Develop and test new approaches to:

- Handle capital habeas corpus cases fairly and efficiently;
- Coordinate related State and Federal criminal cases;
- Coordinate cases that may be brought under the Violence Against Women Act;
- Exchange information and coordinate calendars among State and Federal courts; and
- Share jury pools, alternative dispute resolution programs, and court services.

In previous funding cycles, the Institute has supported national and regional conferences on State-Federal judicial relationships, a national conference on mass tort litigation, and the Chief Justices' Special Committee on Mass Tort Litigation. In addition, the Institute has supported projects developing judicial impact statement procedures for national legislation affecting State courts, and projects examining methods of State and Federal court cooperation; procedures for facilitating certification of questions of law; the impact on the State courts of diversity cases and cases brought under section 1983; the procedures used in Federal habeas corpus review of State court criminal cases; the factors that motivate litigants to select Federal or State courts; and the mechanisms for transferring cases between Federal and State courts, as well as the methods for effectively consolidating, deciding, and managing complex litigation. The Institute has also supported a test of assigning specialized law clerks to trial courts hearing capital cases in order to improve the fairness and efficiency of death penalty litigation at the trial level, a clearinghouse of information on State constitutional law decisions, educational programs for State judges on coordination of Federal bankruptcy cases with State litigation, and a seminar examining the implications of the ''Federalization'' of crime.

m. *Improving the Security of Courthouses, Judges, Jurors, and Witnesses.* This category includes education, demonstration, technical assistance, research, and evaluation projects to:

- Develop or refine policies, practices, procedures, and curricula designed to prevent incidents that endanger the lives of judges, court personnel, jurors, witnesses, and other members of the public in or near the courthouse;
- Prepare and test checklists, protocols, and other tools that courts can use to assess security;
- Assess innovative technology and procedures that can protect the safety of those who do business with and work in the courts without compromising the fairness of court proceedings or individual privacy; and
- Disseminate information on effective methods for determining and improving court security.

Grant funds will not be available solely to hire additional security personnel, purchase security equipment, or support the operational costs of a court security program.

In previous grant cycles, the Institute supported development of a curriculum to train court security personnel and a demonstration of the sharing of court security personnel between rural counties.

C. Single Jurisdiction Projects

The Board will consider supporting a limited number of projects submitted by State or local courts that address the needs of only the applicant State or local jurisdiction. It has established two categories of Single Jurisdiction Projects:

1. Projects Addressing a Critical Need of a Single State or Local Jurisdiction

a. *Description of the Program.* The Board will set aside up to $600,000 to support projects submitted by State or local courts that address the needs of only the applicant State or local jurisdiction. A project under this section may address any of the topics included in the Special Interest Categories or Statutory Program Areas, and may, but need not, seek to implement the findings and recommendations of Institute-supported research, evaluation, or demonstration programs. Concept papers for single jurisdiction projects may be submitted by a State court system, an appellate court, or a limited or general jurisdiction trial court. All awards under this category are subject to the matching requirements set forth in section X.B.1.

b. *Application Procedures.* Concept papers and applications requesting funds for projects under this section must meet the requirements of sections VI. (''Concept Paper Submission Requirements for New Projects'') and VII. (''Application Requirements''), respectively, and must demonstrate that:

i. The proposed project is essential to meeting a critical need of the jurisdiction; and

ii. The need cannot be met solely with State and local resources within the foreseeable future.

2. Technical Assistance Grants

a. *Description of the Program.* The Board will set aside up to $600,000 of Fiscal Year 1996 funds (in addition to any technical assistance funds remaining from Fiscal Year 1995) to support the provision of technical assistance to State and local courts. The exact amount to be awarded for these grants will depend on the number and quality of the applications submitted in this category and other categories of the Guideline. It is anticipated, however, that at least $150,000 will be available each quarter to support Technical Assistance grants. The program is designed to provide State and local courts with sufficient support to obtain technical assistance to diagnose a problem, develop a response to that

problem, and initiate implementation of any needed changes.

Technical Assistance grants are limited to no more than $30,000 each, and may cover the cost of obtaining the services of expert consultants, travel by a team of officials from one court to examine a practice, program, or facility in another jurisdiction that the applicant court is interested in replicating, or both. Technical assistance grant funds ordinarily may not be used to support production of a videotape. Normally, the technical assistance must be completed within 12 months after the start-date of the grant.

The Technical Assistance grant program described in this section should not be confused with the Judicial Education Technical Assistance projects described in Section II.B.2.b.iii.

b. *Eligibility for Technical Assistance Grants.* Only a State or local court may apply for a Technical Assistance grant. As with other awards to State or local courts, cash or in-kind match must be provided equal to at least 50% of the grant amount.

c. *Review Criteria.* Technical Assistance grants will be awarded on the basis of criteria including: Whether the assistance would address a critical need of the court; the soundness of the technical assistance approach to the problem; the qualifications of the consultant(s) to be hired, or the specific criteria that will be used to select the consultant(s); commitment on the part of the court to act on the consultant's recommendations; and the reasonableness of the proposed budget. The Institute also will consider factors such as the level and nature of the match that would be provided, diversity of subject matter, geographic diversity, and the level of appropriations available to the Institute in the current year and the amount expected to be available in succeeding fiscal years.

The Board has delegated its authority to approve these grants to its Technical Assistance Committee.

d. *Application Procedures.* In lieu of concept papers and formal applications, applicants for Technical Assistance grants may submit, at any time, an original and three copies of a detailed letter describing the proposed project and addressing the issues listed below. Letters from an individual trial or appellate court must be signed by the presiding judge or manager of that court. Letters from the State court system must be signed by the Chief Justice or State Court Administrator.

Although there is no prescribed form for the letter nor a minimum or maximum page limit, letters of application should include the following information to assure that each of the criteria is addressed:

i. *Need for Funding.* What is the critical need facing the court? How will the proposed technical assistance help the court to meet this critical need? Why cannot State or local resources fully support the costs of the required consultant services?

ii. *Project Description.* What tasks would the consultant be expected to perform and how would they be accomplished? Who (organization or individual) would be hired to provide the assistance and how was this consultant selected? If a consultant has not yet been identified, what procedures and criteria would be used to select the consultant? (Applicants are expected to follow their jurisdiction's normal procedures for procuring consultant services.) What is the time frame for completion of the technical assistance? How would the court oversee the project and provide guidance to the consultant?

If the consultant has been identified, a letter from that individual or organization documenting interest in and availability for the project, as well as the consultant's ability to complete the assignment within the proposed time period and for the proposed cost, should accompany the applicant's letter. The consultant must agree to submit a detailed written report to the court and the Institute upon completion of the technical assistance.

iii. *Likelihood of Implementation.* What steps have been/will be taken to facilitate implementation of the consultant's recommendations upon completion of the technical assistance? For example, if the support or cooperation of specific court officials or committees, other agencies, funding bodies, organizations, or a court other than the applicant will be needed to adopt the changes recommended by the consultant and approved by the court, how will they be involved in the review of the recommendations and development of the implementation plan?

iv. *Budget and Matching State Contribution.* A completed Form E, ''Preliminary Budget'' (see Appendix IV to the Grant Guideline), must be included with the applicant's letter requesting technical assistance. Please note that the estimated cost of the technical assistance services should be broken down into the categories listed on the budget form rather than aggregated under the Consultant/Contractual category. The budget narrative should provide the basis for all project-related costs, including the basis for determining the estimated consultant costs (e.g., number of days per task times the requested daily consultant rate). In addition, the budget should provide for submission of two copies of the consultant's final report to the Institute.

v. *Support for the Project from the State Supreme Court or its Designated Agency or Council.* Written concurrence on the need for the technical assistance must be submitted. This concurrence may be a copy of SJI Form B (see Appendix V.) signed by the Chief Justice of the State Supreme Court or the Chief Justice's designee, or a letter from the State Chief Justice or designee. The concurrence may be submitted with the applicant's letter or under separate cover prior to consideration of the application. The concurrence also must specify whether the State Supreme Court would receive, administer, and account for the grant funds, if awarded, or would designate the local court or a specified agency or council to receive the funds directly.

Letters of application may be submitted at any time; however, all of the letters received during a calendar quarter will be considered at one time. Applicants submitting letters between September 30, 1995, and January 12, 1996 will be notified of the Board's decision by March 29, 1996; those submitting letters between January 13 and March 15, 1996 will be notified by May 31, 1996. Notification of the Board's decisions concerning letters received between March 16 and June 16, 1996 will be made by August 31, 1996 and applicants submitting letters between June 17 and September 30, 1996, will be notified by November 29, 1996.

If the support or cooperation of agencies, funding bodies, organizations, or courts other than the applicant, would be needed in order for the consultant to perform the required tasks, written assurances of such support or cooperation must accompany the application letter. Support letters also may be submitted under separate cover; however, to ensure that there is sufficient time to bring them to the attention of the Board's Technical Assistance Committee, letters sent under separate cover must be received not less than two weeks prior to the Board meeting at which the technical assistance requests will be considered (i.e., by November 16, 1995; February 14, 1996; April 4, 1996; and July 11, 1996).

e. *Grantee Responsibilities.* Technical Assistance grant recipients are subject to the same quarterly reporting requirements as other Institute grantees. At the conclusion of the grant period, a Technical Assistance grant recipient

must complete a Technical Assistance Evaluation Form. The grantee also must submit to the Institute two copies of a final report that explains how it intends to act on the consultant's recommendations as well as two copies of the consultant's written report.

III. Definitions

The following definitions apply for the purposes of this guideline:

A. Institute

The State Justice Institute.

B. State Supreme Court

The highest appellate court in a State, or, for the purposes of the Institute program, a constitutionally or legislatively established judicial council that acts in place of that court. In States having more than one court with final appellate authority, State Supreme Court shall mean that court which also has administrative responsibility for the State's judicial system. State Supreme Court also includes the office of the court or council, if any, it designates to perform the functions described in this Guideline.

C. Designated Agency or Council

The office or judicial body which is authorized under State law or by delegation from the State Supreme Court to approve applications for funds and to receive, administer, and be accountable for those funds.

D. Grantee

The organization, entity, or individual to which an award of Institute funds is made. For a grant based on an application from a State or local court, grantee refers to the State Supreme Court or its designee.

E. Subgrantee

A State or local court which receives Institute funds through the State Supreme Court.

F. Match

The portion of project costs not borne by the Institute. Match includes both in-kind and cash contributions. Cash match is the direct outlay of funds by the grantee to support the project. In-kind match consists of contributions of time, services, space, supplies, etc., made to the project by the grantee or others (e.g., advisory board members) working directly on the project. Under normal circumstances, allowable match may be incurred only during the project period. When appropriate, and with the prior written permission of the Institute, match may be incurred from the date of the Institute Board of Directors' approval of an award. Match does not include project-related income such as tuition or revenue from the sale of grant products, or the time of participants attending an education program. Amounts contributed as cash or in-kind match may not be recovered through the sale of grant products during or following the grant period.

G. Continuation Grant

A grant of no more than 24 months to permit completion of activities initiated under an existing Institute grant or enhancement of the programs or services produced or established during the prior grant period.

H. On-going Support Grant

A grant of up to 36 months to support a project that is national in scope and that provides the State courts with services, programs or products for which there is a continuing important need.

I. Package Grant

A single grant that supports two or more closely-related projects which logically should be viewed as a whole or would require substantial duplication of effort if administered separately. Closely-related projects may include those addressing interrelated topics, or those requiring the services of all or some of the same key staff persons, or the core elements of a multifaceted program. Each of the components of a package grant must operate within the same project period.

J. Human Subjects

Individuals who are participants in an experimental procedure or who are asked to provide information about themselves, their attitudes, feelings, opinions and/or experiences through an interview, questionnaire, or other data collection technique(s).

K. Curriculum

The materials needed to replicate an education or training program developed with grant funds including, but not limited to: the learning objectives; the presentation methods; a sample agenda or schedule; an outline of presentations and other instructors' notes; copies of overhead transparencies or other visual aids; exercises, case studies, hypotheticals, quizzes and other materials for involving the participants; background materials for participants; evaluation forms; and suggestions for replicating the program including possible faculty or the preferred qualifications or experience of those selected as faculty.

L. Products

Tangible materials resulting from funded projects including, but not limited to: curricula; monographs; reports; books; articles; manuals; handbooks; benchbooks; guidelines; videotapes; audiotapes; and computer software.

IV. Eligibility for Award

In awarding funds to accomplish these objectives and purposes, the Institute has been authorized by Congress to award grants, cooperative agreements, and contracts to State and local courts and their agencies (42 U.S.C. 10705(b)(1)(A)); national nonprofit organizations controlled by, operating in conjunction with, and serving the judicial branches of State governments (42 U.S.C. 10705(b)(1)(B)); and national nonprofit organizations for the education and training of judges and support personnel of the judicial branch of State governments (42 U.S.C. 10705(b)(1)(C)).

An applicant will be considered a national education and training applicant under section 10705(b)(1)(C) if: (1) The principal purpose or activity of the applicant is to provide education and training to State and local judges and court personnel; and (2) the applicant demonstrates a record of substantial experience in the field of judicial education and training.

The Institute also is authorized to make awards to other nonprofit organizations with expertise in judicial administration, institutions of higher education, individuals, partnerships, firms, corporations, and private agencies with expertise in judicial administration, provided that the objectives of the relevant program area(s) can be served better. In making this judgment, the Institute will consider the likely replicability of the projects' methodology and results in other jurisdictions. For-profit organizations are also eligible for grants and cooperative agreements; however, they must waive their fees.

The Institute may also make awards to Federal, State or local agencies and institutions other than courts for services that cannot be adequately provided through nongovernmental arrangements.

In addition, the Institute may enter into inter-agency agreements with other public or private funders to support projects consistent with the purpose of the State Justice Institute Act.

Finally, the Institute may award grants to non-profit organizations, Tribal courts, or Tribal governments to support the development, testing, presentation,

or dissemination of educational programs and materials for Tribal court judges and Tribal court personnel on the issues listed in section 40412 of the Violence Against Women Act (Title IV, Violent Crime and Law Enforcement Act, P.L. 103–322). (See section II.A.20.)

Each application for funding from a State or local court must be approved, consistent with State law, by the State's Supreme Court or its designated agency or council. The latter shall receive all Institute funds awarded to such courts and be responsible for assuring proper administration of Institute funds, in accordance with section XI.B.2. of this Guideline. A list of persons to contact in each State regarding approval of applications from State and local courts and administration of Institute grants to those courts is contained in Appendix I.

V. Types of Projects and Grants; Size of Awards

A. Types of Projects

Except as expressly provided in section II.B.2.b. and II.C. above, the Institute has placed no limitation on the overall number of awards or the number of awards in each special interest category. The general types of projects are:

1. Education and training;
2. Research and evaluation;
3. Demonstration; and
4. Technical assistance.

B. Types of Grants

The Institute has established the following types of grants:

1. New grants (See sections VI. and VII.).
2. Continuation grants (See sections III.H. and IX.A).
3. On-going Support grants (See sections III.I. and IX.B.).
4. Package grants (See sections III.J., VI.A.2.b., VI.A.3.b., and VII.).
5. Technical Assistance grants (See section II.C.2.).
6. Curriculum Adaptation grants (See section II.B.2.b.i.i.).
7. Scholarships (See section II.B.2.b.v.).

C. Maximum Size of Awards

1. Except as specified below, concept papers and applications for new projects other than national conferences, and applications for continuation grants may request funding in amounts up to $300,000, although new and continuation awards in excess of $200,000 are likely to be rare and to be made, if at all, only for highly promising proposals that will have a significant impact nationally.

2. Applications for on-going support grants may request funding in amounts up to $600,000, except as provided in paragraph V.C.3. At the discretion of the Board, the funds for on-going support grants may be awarded either entirely from the Institute's appropriations for the fiscal year of the award or from the Institute's appropriations for successive fiscal years beginning with the fiscal year of the award. When funds to support the full amount of an on-going support grant are not awarded from the appropriations for the fiscal year of award, funds to support any subsequent years of the grant will be made available upon (1) the satisfactory performance of the project as reflected in the quarterly Progress Reports required to be filed and grant monitoring, and (2) the availability of appropriations for that fiscal year.

3. An application for a package grant may request funding in an amount up to a total of $750,000 per year.

4. Applications for technical assistance grants may request funding in amounts up to $30,000.

5. Applications for curriculum adaptation grants may request funding in amounts up to $20,000.

6. Applications for scholarships may request funding in amounts up to $1,500.

D. Length of Grant Periods

1. Grant periods for all new and continuation projects ordinarily will not exceed 24 months.

2. Grant periods for on-going support grants ordinarily will not exceed 36 months.

3. Grant periods for technical assistance grants and curriculum adaptation grants ordinarily will not exceed 12 months.

VI. Concept Paper Submission Requirements for New Projects

Concept papers are an extremely important part of the application process because they enable the Institute to learn the program areas of primary interest to the courts and to explore innovative ideas, without imposing heavy burdens on prospective applicants. The use of concept papers also permits the Institute to better project the nature and amount of grant awards. This requirement and the submission deadlines for concept papers and applications may be waived by the Executive Director for good cause (e.g., the proposed project could provide a significant benefit to the State courts or the opportunity to conduct the project did not arise until after the deadline).

A. Format and Content

All concept papers must include a cover sheet, a program narrative, and a preliminary budget, regardless of whether the applicant is proposing a single project or a ''package'' of projects, or whether the applicant is requesting accelerated award of a grant of less than $40,000.

1. The Cover Sheet

The cover sheet for all concept papers must contain:

a. A title describing the proposed project;

b. The name and address of the court, organization or individual submitting the paper;

c. The name, title, address (if different from that in b.), and telephone number of a contact person(s) who can provide further information about the paper;

d. The letter of the Special Interest Category (see section II.B.2.) or the number of the statutory Program Area (see section II.A.) that the proposed project addresses most directly; and

e. The estimated length of the proposed project.

Applicants requesting the Board to waive the application requirement and approve a grant of less than $40,000 based on the concept paper, should add APPLICATION WAIVER REQUESTED to the information on the cover page.

2. The Program Narrative

a. *Concept Papers Proposing a Single Project.* The program narrative of a concept paper describing a single project should be no longer than necessary, but *in no case should exceed eight (8) double-spaced pages on 8½ by 11 inch paper. Margins must not be less than 1 inch and type no smaller than 12 point and 12 cpi must be used.* The narrative should describe:

i. *Why is this project needed and how will it benefit State courts?* If the project is to be conducted in a specific location(s), applicants should discuss the particular needs of the project site(s) to be addressed by the project, why those needs are not being met through the use of existing materials, programs, procedures, services or other resources, and the benefits that would be realized by the proposed site(s).

If the project is not site-specific, applicants should discuss the problems that the proposed project will address, why existing materials, programs, procedures, services or other resources do not adequately resolve those problems, and the benefits that would be realized from the project by State courts generally.

ii. *What will be done if a grant is awarded?* Applicants should include a summary description of the project to be conducted and the approach to be taken, including the anticipated length of the

grant period. Applicants requesting a waiver of the application requirement for a grant of less than $40,000 should explain the proposed methods for conducting the project as fully as space allows, and include a detailed task schedule as an attachment to the concept paper.

iii. *How will the effects and quality of the project be determined?* Applicants should include a summary description of how the project will be evaluated, including the evaluation criteria.

iv. *How will others find out about the project and be able to use the results?* Applicants should describe the products that will result, the degree to which they will be applicable to courts across the nation, and the manner in which the products and results of the project will be disseminated.

b. *Concept Papers Requesting a Package Grant Covering More Than One Project.* The program narrative of a concept paper requesting a package grant (see definition in section III.I.) should be no longer than necessary, but in no case should exceed 15 double-spaced pages on 8½ by 11 inch paper. Margins must not be less than 1 inch, and type no smaller than 12-point and 12 cpi must be used.

In addition to addressing the issues listed in paragraph VI.A.2.a., the program narrative of a package grant concept paper must describe briefly each component project, as well as how its inclusion enhances the entire package; and explain:

i. How are the proposed projects related?

ii. How would their operation and administration be enhanced if they were funded as a package rather than as individual projects? and

iii. What disadvantages, if any, would accrue by considering or funding them separately?

3. The Budget

a. *Concept Papers Proposing a Single Project.* A preliminary budget must be attached to the narrative that includes the estimates and information specified on Form E included in Appendix IV of this Guideline.

b. *Concept Papers Requesting a Package Grant Covering More Than One Project.* A separate preliminary budget for each component project of the package, as well as a combined budget that reflects the costs of the entire package, must be attached to the narrative. Each project budget must be identified by the title that corresponds to the narrative description of the project in the program narrative and a letter of the alphabet (i.e. A, B, C). Each of these budgets must include the estimates and information specified on Form E included in Appendix IV of this Guideline.

c. *Concept Papers Requesting Accelerated Award of a Grant of Less than $40,000.* Applicants requesting a waiver of the application requirement and approval of a grant based on a concept paper under section VI.C., must attach to Form E (see Appendix IV) a budget narrative explaining the basis for each of the items listed, and whether the costs would be paid from grant funds or through a matching contribution or other sources. The budget narrative is not counted against the eight-page limit for the program narrative.

4. Letters of Cooperation or Support

The Institute encourages concept paper applicants to attach letters of cooperation and support from the courts and related agencies that will be involved in or directly affected by the proposed project. Letters of support also may be sent under separate cover. However, in order to ensure that there is sufficient time to bring them to the Board's attention, support letters sent under separate cover must be received no later than January 12, 1996.

5. Page Limits

a. The Institute will not accept concept papers with program narratives exceeding the limits set in sections VI.A.2.a. and b. The page limit does not include the cover page, budget form, the budget narrative if required under section VI.A.3.c., the task schedule if required under section VI.A.2.a.ii., and any letters of cooperation or endorsements. Additional material should not be attached unless it is essential to impart a clear understanding of the project.

b. Applicants submitting more than one concept paper may include material that would be identical in each concept paper in a cover letter, and incorporate that material by reference in each paper. The incorporated material will be counted against the eight-page limit for each paper. A copy of the cover letter should be attached to each copy of each concept paper.

6. Sample Concept Papers

Sample concept papers from previous funding cycles are available from the Institute upon request.

B. Selection Criteria

1. All concept papers will be evaluated by the staff on the basis of the following criteria:

a. The demonstration of need for the project;

b. The soundness and innovativeness of the approach described;

c. The benefits to be derived from the project;

d. The reasonableness of the proposed budget;

e. The proposed project's relationship to one of the ''Special Interest'' categories set forth in section II.B; and

f. The degree to which the findings, procedures, training, technology, or other results of the project can be transferred to other jurisdictions.

2. ''Single jurisdiction'' concept papers submitted pursuant to section II.C. will be rated on the proposed project's relation to one of the ''Special Interest'' categories set forth in section II.B., and on the special requirements listed in section II.C.1.

3. In determining which concept papers will be selected for development into full applications, the Institute will also consider the availability of financial assistance from other sources for the project; the amount and nature (cash or in-kind) of the applicant's anticipated match; whether the applicant is a State court, a national court support or education organization, a non-court unit of government, or another type of entity eligible to receive grants under the Institute's enabling legislation (see 42 U.S.C. 10705(b) (as amended) and section IV above); the extent to which the proposed project would also benefit the Federal courts or help the State courts enforce Federal constitutional and legislative requirements, and the level of appropriations available to the Institute in the current year and the amount expected to be available in succeeding fiscal years.

C. Review Process

Concept papers will be reviewed competitively by the Board of Directors. Institute staff will prepare a narrative summary and a rating sheet assigning points for each relevant selection criterion for those concept papers which fall within the scope of the Institute's funding program and merit serious consideration by the Board. Staff will also prepare a list of those papers that, in the judgment of the Executive Director, propose projects that lie outside the scope of the Institute's funding program or are not likely to merit serious consideration by the Board. The narrative summaries, rating sheets, and list of non-reviewed papers will be presented to the Board for their review. Committees of the Board will review concept paper summaries within assigned program areas and prepare recommendations for the full Board. The full Board of Directors will then

decide which concept paper applicants should be invited to submit formal applications for funding.

The decision to invite an application is solely that of the Board of Directors. With regard to concept papers requesting a package grant, the Board retains discretion to invite an application including all, none, or selected portions of the package for possible funding.

The Board may waive the application requirement and approve a grant based on a concept paper for a project requiring less than $40,000, when the need for and benefits of the project are clear, and the methodology and budget require little additional explanation. Because the Institute's experience has been that projects to conduct empirical research or program evaluation ordinarily require a more thorough explanation of the methodology to be used than can be provided within the space limitations of a concept paper, the Board is unlikely to waive the application requirement for such projects.

D. Submission Requirements

An original and three copies of all concept papers submitted for consideration in Fiscal Year 1996 must be sent by first class or overnight mail or by courier no later than November 28, 1995, except for concept papers proposing to implement an action plan developed during the National Conference on Eliminating Race and Ethnic Bias in the Courts which must be sent by October 6, 1995 (see section II.B.2.i.) and concept papers proposing projects that follow up on the National Town Hall Meeting Video Conference, the National Interbranch Conference on Funding the State Courts, or the National Symposium on the Implementation and Operation of Drug Courts which must be sent by March 8, 1996 (see sections II.B.2.a.,d., and h.). A postmark or courier receipt will constitute evidence of the submission date. All envelopes containing concept papers should be marked CONCEPT PAPER and should be sent to: State Justice Institute, 1650 King Street, Suite 600, Alexandria, Virginia 22314.

It is preferable for letters of cooperation and support to be appended to the concept paper when it is submitted. If support letters are sent under separate cover, they must be received no later than January 12, 1996 in order to ensure that there is sufficient time to bring them to the Board's attention.

The Institute will send written notice to all persons submitting concept papers of the Board's decisions regarding their papers and of the key issues and questions that arose during the review process. A decision by the Board not to invite an application may not be appealed, but does not prohibit resubmission of the concept paper or a revision thereof in a subsequent round of funding. The Institute will also notify the designated State contact listed in the Appendix when the Board invites applications that are based on concept papers which are submitted by courts within their State or which specify a participating site within their State.

Receipt of each concept paper will be acknowledged in writing. Extensions of the deadline for submission of concept papers will not be granted.

VII. Application Requirements For New Projects

Except as specified in section VI., a formal application for a new project is to be submitted only upon invitation of the Board following review of a concept paper. An application for Institute funding support must include an application form; budget forms (with appropriate documentation); a project abstract and program narrative; a disclosure of lobbying form, when applicable; and certain certifications and assurances. These documents are described below.

A. Forms

1. Application Form (FORM A)

The application form requests basic information regarding the proposed project, the applicant, and the total amount of funding support requested from the Institute. It also requires the signature of an individual authorized to certify on behalf of the applicant that the information contained in the application is true and complete, that submission of the application has been authorized by the applicant, and that if funding for the proposed project is approved, the applicant will comply with the requirements and conditions of the award, including the assurances set forth in Form D.

2. Certificate of State Approval (FORM B)

An application from a State or local court must include a copy of FORM B signed by the State's Chief Justice or Chief Judge, the director of the designated agency, or the head of the designated council. The signature denotes that the proposed project has been approved by the State's highest court or the agency or council it has designated. It denotes further that if funding for the project is approved by the Institute, the court or the specified designee will receive, administer, and be accountable for the awarded funds.

3. Budget Forms (FORM C or C1)

Applicants may submit the proposed project budget either in the tabular format of FORM C or in the spreadsheet format of FORM C1. Applicants requesting more than $100,000 are strongly encouraged to use the spreadsheet format. If the proposed project period is for more than a year, a separate form should be submitted for each year or portion of a year for which grant support is requested.

In addition to FORM C or C1, applicants must provide a detailed budget narrative providing an explanation of the basis for the estimates in each budget category. (See section VII.D.)

Applications for a package grant must include a separate budget and budget narrative for each project included in the proposed package, as well as a combined budget that reflects the total costs of the entire package.

If funds from other sources are required to conduct the project, either as match or to support other aspects of the project, the source, current status of the request, and anticipated decision date must be provided.

4. Assurances (FORM D)

This form lists the statutory, regulatory, and policy requirements and conditions with which recipients of Institute funds must comply.

5. Disclosure of Lobbying Activities

This form requires applicants other than units of State or local government to disclose whether they, or another entity that is part of the same organization as the applicant, have advocated a position before Congress on any issue, and to identify the specific subjects of their lobbying efforts. (See section X.D.)

B. Project Abstract

The abstract should highlight the purposes, goals, methods and anticipated benefits of the proposed project. It should not exceed one single-spaced page on 8½ by 11 inch paper.

C. Program Narrative

The program narrative for an application proposing a single project should not exceed 25 double-spaced pages on 8½ by 11 inch paper. The program narrative for an application requesting a package grant for more than one project should not exceed 40 double-spaced pages on 8½ by 11 inch paper. Margins must not be less than 1 inch, and type no smaller than 12-point

and 12 cpi must be used. The page limit does not include the forms, the abstract, the budget narrative, and any appendices containing resumes and letters of cooperation or endorsement. Additional background material should be attached only if it is essential to impart a clear understanding of the proposed project. Numerous and lengthy appendices are strongly discouraged.

The program narrative should address the following topics:

1. Project Objectives

The applicant should include a clear, concise statement of what the proposed project is intended to accomplish. In stating the objectives of the project, applicants should focus on the overall programmatic objective (e.g., to enhance understanding and skills regarding a specific subject, or to determine how a certain procedure affects the court and litigants) rather than on operational objectives (e.g., provide training for 32 judges and court managers, or review data from 300 cases).

2. Program Areas to be Covered

The applicant should include a statement which lists the program areas set forth in the State Justice Institute Act, and, if appropriate, the Institute's Special Interest program categories that are addressed by the proposed projects.

3. Need for the Project

If the project is to be conducted in a specific location(s), the applicant should include a discussion of the particular needs of the project site(s) to be addressed by the project and why those needs are not being met through the use of existing materials, programs, procedures, services or other resources.

If the project is not site specific, the applicant should include a discussion of the problems that the proposed project will address, and why existing materials, programs, procedures, services or other resources do not adequately resolve those problems. The discussion should include specific references to the relevant literature and to the experience in the field.

An application requesting a package grant to support more than one project also must describe how the proposed projects in the package are related; how their operation and administration would be enhanced if they were funded as a package rather than as individual projects; and what disadvantages, if any, would accrue by considering or funding them separately.

4. Tasks, Methods and Evaluation

a. *Tasks and Methods.* The applicant should delineate the tasks to be performed in achieving the project objectives and the methods to be used for accomplishing each task. For example:

i. *For research and evaluation projects,* the applicant should include the data sources, data collection strategies, variables to be examined, and analytic procedures to be used for conducting the research or evaluation and ensuring the validity and general applicability of the results. For projects involving human subjects, the discussion of methods should address the procedures for obtaining respondents' informed consent, ensuring the respondents' privacy and freedom from risk or harm, and the protection of others who are not the subjects of research but would be affected by the research. If the potential exists for risk or harm to the human subjects, a discussion should be included that explains the value of the proposed research and the methods to be used to minimize or eliminate such risk.

ii. *For education and training projects,* the applicant should include the adult education techniques to be used in designing and presenting the program, including the teaching/learning objectives of the educational design, the teaching methods to be used, and the opportunities for structured interaction among the participants; how faculty will be recruited, selected, and trained; the proposed number and length of the conferences, courses, seminars or workshops to be conducted; the materials to be provided and how they will be developed; and the cost to participants.

iii. *For demonstration projects,* the applicant should include the demonstration sites and the reasons they were selected, or if the sites have not been chosen, how they will be identified and their cooperation obtained; and how the program or procedures will be implemented and monitored.

iv. *For technical assistance projects,* the applicant should explain the types of assistance that will be provided; the particular issues and problems for which assistance will be provided; how requests will be obtained and the type of assistance determined; how suitable providers will be selected and briefed; how reports will be reviewed; and the cost to recipients.

An application requesting a package grant for more than one project must describe separately the tasks associated with each project in the proposed package. Each project must be identified by a separate letter of the alphabet (i.e., A, B, C) and a descriptive title.

b. *Evaluation.* Every project design must include an evaluation plan to determine whether the project met its objectives. The evaluation should be designed to provide an objective and independent assessment of the effectiveness or usefulness of the training or services provided; the impact of the procedures, technology or services tested; or the validity and applicability of the research conducted. In addition, where appropriate, the evaluation process should be designed to provide on-going or periodic feedback on the effectiveness or utility of particular programs, educational offerings, or achievements which can then be further refined as a result of the evaluation process. The plan should present the qualifications of the evaluator(s); describe the criteria, related to the project's programmatic objectives, that will be used to evaluate the project's effectiveness; explain how the evaluation will be conducted, including the specific data collection and analysis techniques to be used; discuss why this approach is appropriate; and present a schedule for completion of the evaluation within the proposed project period.

The evaluation plan should be appropriate to the type of project proposed. For example:

i. An evaluation approach suited to may *research* projects is a review by an advisory panel of the research methodology, data collection instruments, preliminary analyses, and products as they are drafted. The panel should be comprised of independent researchers and practitioners representing the perspectives affected by the proposed project.

ii. The most valuable approaches to evaluating *educational or training* programs will serve to reinforce the participants' learning experience while providing useful feedback on the impact of the program and possible areas for improvement. One appropriate evaluation approach is to assess the acquisition of new knowledge, skills, attitudes or understanding through participant feedback on the seminar or training event. Such feedback might include a self-assessment on what was learned along with the participant's response to the quality and effectiveness of faculty presentations, the format of sessions, the value or usefulness of the material presented and other relevant factors. Another appropriate approach would be to use an independent observer who might request verbal as

well as written responses from participants in the program. When an education project involves the development of curricular materials an advisory panel of relevant experts can be coupled with a test of the curriculum to obtain the reactions of participants and faculty as indicated above.

iii. The evaluation plan for a *demonstration* project should encompass an assessment of program effectiveness (e.g., how well did it work?); user satisfaction, if appropriate; the cost-effectiveness of the program; a process analysis of the program (e.g., was the program implemented as designed? did it provide the services intended to the targeted population?); the impact of the program (e.g., what effect did the program have on the court? what benefits resulted from the program?); and the replicability of the program or components of the program.

iv. For *technical assistance* projects, applicants should explain how the quality, timeliness, and impact of the assistance provided will be determined, and should develop a mechanism for feedback from both the users and providers of the technical assistance.

v. Evaluation plans involving *human subjects* should include a discussion of the procedures for obtaining respondents' informed consent, ensuring the respondents' privacy and freedom from risk or harm, and the protection of others who are not the subjects of evaluation but would be affected by it. Other than the provision of confidentiality to respondents, human subjects protection issues ordinarily are not applicable to participants evaluating an education program.

vi. The evaluation plan in a package grant application should address the issues listed above for the particular types of projects included in the package, assessing the strengths and weaknesses of the individual components as well as the benefits and limitations of the projects as a package.

5. Project Management

The applicant should present a detailed management plan including the starting and completion date for each task; the time commitments to the project of key staff and their responsibilities regarding each project task; and the procedures that will be used to ensure that all tasks are performed on time, within budget, and at the highest level of quality. In preparing the project time line, Gantt Chart, or schedule, applicants should make certain that all project activities, including publication or reproduction of project products and their initial dissemination will occur within the proposed project period. The management plan must also provide for the submission of Quarterly Progress and Financial Reports within 30 days after the close of each calendar quarter (i.e., no later than January 30, April 30, July 30, and October 30).

Package grant applications must include a management plan for each project included in the package with the same project title and alphabetic identifier describing the project in the program narrative, as well as a plan embracing the package as a whole.

6. Products

The application should contain a description of the products to be developed by the project (e.g., training curricula and materials, videotapes, articles, manuals, or handbooks), including when they will be submitted to the Institute.

a. Dissemination Plan. The application must explain how and to whom the products will be disseminated; describe how they will benefit the State courts including how they can be used by judges and court personnel; identify development, production, and dissemination costs covered by the project budget; and present the basis on which products and services developed or provided under the grant will be offered to the courts community and the public at large (i.e. whether products will be distributed at no cost to recipients, or if costs are involved, the reason for charging recipients and the estimated price of the product). (See section X.V.) Ordinarily, applicants should schedule all product preparation and distribution activities within the project period. Applicants also must submit a diskette containing a one-page abstract summarizing the products resulting from a project in Word, WordPerfect or ASCII. The abstract should include the grant number and the name of a contact person together with that individual's address, telephone number, and e-mail address (if applicable).

Package grant applications must discuss these issues with regard to the products that would result from each of the projects included in the package.

A copy of each product must be sent to the library established in each State to collect the materials developed with Institute support. (A list of these libraries is contained in Appendix II.) To facilitate their use, all videotaped products should be distributed in VHS format.

Twenty copies of all project products, must be submitted to the Institute. A mastercopy of each videotape, in addition to 20 copies of each videotape product, must also be provided to the Institute.

b. Types of Products. The type of products to be prepared depend on the nature of the project. For example, in most instances, the products of a research, evaluation, or demonstration project should include an article summarizing the project findings that is publishable in a journal serving the courts community nationally, an executive summary that will be disseminated to the project's primary audience, or both. Applicants proposing to conduct empirical research or evaluation projects with national import should describe how they will make their data available for secondary analysis after the grant period. (See section X.W.)

The curricula and other products developed by education and training projects should be designed for use outside the classroom so that they may be used again by original participants and others in the course of their duties.

c. Institute Review. Applicants must provide for submitting a final draft of written grant product(s) to the Institute for review and approval at least 30 days before the product(s) are submitted for publication or reproduction. For products in a videotape or CD–ROM format, applicants must provide for incremental Institute review of the product at the treatment, script, rough-cut, and final stages of development, or their equivalents. No grant funds may be obligated for publication or reproduction of a final grant product without the written approval of the Institute.

d. Acknowledgment, Disclaimer, and Logo. Applicants must also provide for including in all project products a prominent acknowledgment that support was received from the Institute and a disclaimer paragraph based on the example provided in section X.Q. of the Guideline. The ''SJI'' logo must appear on the front cover of a written product, or in the opening frames of a video product, unless the Institute approves another placement.

7. Applicant Status

An applicant that is not a State or local court and has not received a grant from the Institute within the past two years should include a statement indicating whether it is either a national nonprofit organization controlled by, operating in conjunction with, and serving the judicial branches of State governments; or a national nonprofit organization for the education and training of State court judges and support personnel. See section IV. If the

applicant is a nonjudicial unit of Federal, State, or local government, it must explain whether the proposed services could be adequately provided by nongovernmental entities.

8. Staff Capability

The applicant should include a summary of the training and experience of the key staff members and consultants that qualify them for conducting and managing the proposed project. Resumes of identified staff should be attached to the application. If one or more key staff members and consultants are not known at the time of the application, a description of the criteria that will be used to select persons for these positions should be included.

9. Organizational Capacity

Applicants that have not received a grant from the Institute within the past two years should include a statement describing the capacity of the applicant to administer grant funds including the financial systems used to monitor project expenditures (and income, if any), and a summary of the applicant's past experience in administering grants, as well as any resources or capabilities that the applicant has that will particularly assist in the successful completion of the project.

If the applicant is a non-profit organization (other than a university), it must also provide documentation of its 501(c) tax exempt status as determined by the Internal Revenue Service and a copy of a current certified audit report. For purposes of this requirement, ''current'' means no earlier than two years prior to the current calender year. If a current audit report is not available, the Institute will require the organization to complete a financial capability questionnaire which must be signed by a Certified Public Accountant. Other applicants may be required to provide a current audit report, a financial capability questionnaire, or both, if specifically requested to do so by the Institute.

Unless requested otherwise, an applicant that has received a grant from the Institute within the past two years should describe only the changes in its organizational capacity, tax status, or financial capability that may affect its capacity to administer a grant.

10. Statement of Lobbying Activities

Non-governmental applicants must submit the Institute's Disclosure of Lobbying Activities Form that requires them to state whether they, or another entity that is a part of the same organization as the applicant, have advocated a position before Congress on any issue, and identifies the specific subjects of their lobbying efforts.

11. Letters of Support for the Project

If the cooperation of courts, organizations, agencies, or individuals other than the applicant is required to conduct the project, the applicant should attach written assurances of cooperation and availability to the application, or send them under separate cover. In order to ensure that there is sufficient time to bring them to the Board's attention, letters of support sent under separate cover must be received at least four weeks before the meeting of the Board of Directors at which the application will be considered (i.e., no later than November 2, 1995, February 1, 1996, March 21, 1996, June 28, 1996, or August 22, 1996, respectively).

D. Budget Narrative

The budget narrative should provide the basis for the computation of all project-related costs. An application for a package grant for more than one project must include a separate budget narrative for each project component, with the same alphabetic identifier and project title used to describe each component project in the program narrative. Additional background or schedules may be attached if they are essential to obtaining a clear understanding of the proposed budget. Numerous and lengthy appendices are strongly discouraged.

The budget narrative should cover the costs of all components of the project and clearly identify costs attributable to the project evaluation. Under OMB grant guidelines incorporated by reference in this Guideline, grant funds may not be used to pay for coffee breaks during seminars or meetings, or to purchase alcoholic beverages.

1. Justification of Personnel Compensation

The applicant should set forth the percentages of time to be devoted by the individuals who will serve as the staff of the proposed project, the annual salary of each of those persons, and the number of work days per year used for calculating the percentages of time or daily rate of those individuals. The applicant should explain any deviations from current rates or established written organization policies. If grant funds are requested to pay the salary and related costs for a current employee of a court or other unit of government, the applicant should explain why this would not constitute a supplantation of State or local funds in violation of 42 U.S.C. 10706 (d)(1). An acceptable explanation may be that the position to be filled is a new one established in conjunction with the project or that the grant funds will be supporting only the portion of the employee's time that will be dedicated to new or additional duties related to the project.

2. Fringe Benefit Computation

The applicant should provide a description of the fringe benefits provided to employees. If percentages are used, the authority for such use should be presented as well as a description of the elements included in the determination of the percentage rate.

3. Consultant/Contractual Services and Honoraria

The applicant should describe the tasks each consultant will perform, the estimated total amount to be paid to each consultant, the basis for compensation rates (e.g., number of days x the daily consultant rates), and the method for selection. Rates for consultant services must be set in accordance with section XI.H.2.c. Honorarium payments must be justified in the same manner as other consultant payments.

4. Travel

Transportation costs and per diem rates must comply with the policies of the applicant organization. If the applicant does not have an established travel policy, then travel rates shall be consistent with those established by the Institute or the Federal Government. (A copy of the Institute's travel policy is available upon request.) The budget narrative should include an explanation of the rate used, including the components of the per diem rate and the basis for the estimated transportation expenses. The purpose for travel should also be included in the narrative.

5. Equipment

Grant funds may be used to purchase only the equipment that is necessary to demonstrate a new technological application in a court, or that is otherwise essential to accomplishing the objectives of the project. Equipment purchases to support basic court operations ordinarily will not be approved. The applicant should describe the equipment to be purchased or leased and explain why the acquisition of that equipment is essential to accomplish the project's goals and objectives. The narrative should clearly identify which equipment is to be leased and which is to be purchased. The method of procurement should also be described.

Purchases for automatic data processing equipment must comply with section XI.H.2.b.

6. Supplies

The applicant should provide a general description of the supplies necessary to accomplish the goals and objectives of the grant. In addition, the applicant should provide the basis for the amount requested for this expenditure category.

17. Construction

Construction expenses are prohibited except for the limited purposes set forth in section X.H.2. Any allowable construction or renovation expense should be described in detail in the budget narrative.

8. Telephone

Applicants should include anticipated telephone charges, distinguishing between monthly charges and long distance charges in the budget narrative. Also, applicants should provide the basis used in developing the monthly and long distance estimates.

9. Postage

Anticipated postage costs for project-related mailings should be described in the budget narrative. The cost of special mailings, such as for a survey or for announcing a workshop, should be distinguished from routine operational mailing costs. The bases for all postage estimates should be included in the justification material.

10. Printing/Photocopying

Anticipated costs for printing or photocopying should be included in the budget narrative. Applicants should provide the details underlying these estimates in support of the request.

11. Indirect Costs

Applicants should describe the indirect cost rates applicable to the grant in detail. If costs often included within an indirect cost rate are charged directly (e.g., a percentage of the time of senior managers to supervise product activities), the applicant should specify that these costs are not included within their approved indirect cost rate. These rates must be established in accordance with section XI.H.4. If the applicant has an indirect cost rate or allocation plan approved by any Federal granting agency, a copy of the approved rate agreement should be attached to the application.

12. Match

The applicant should describe the source of any matching contribution and the nature of the match provided. Any additional contributions to the project should be described in this section of the budget narrative as well. If in-kind match is to be provided, the applicant should describe how the amount and value of the time, services or materials actually contributed will be documented sufficiently clearly to permit them to be included in an audit of the grant. Applicants should be aware that the time spent by participants in education courses does not qualify as in-kind match. (Samples of forms used by current grantees to track in-kind match are available from the Institute upon request.)

Applicants that do not contemplate making matching contributions continuously throughout the course of the project or on a task-by-task basis must provide a schedule within 30 days after the beginning of the project period indicating at what points during the project period the matching contributions will be made. (See sections III.F., VIII.B., X.B. and XI.D.1.)

E. Submission Requirements

1. An application package containing the application, an original signature on FORM A (and on FORM B, if the application is from a State or local court, or on the Disclosure of Lobbying Form if the applicant is not a unit of State or local government), and four photocopies of the application package must be sent by first class or overnight mail, or by courier no later than May 8, 1996. A postmark or courier receipt will constitute evidence of the submission date. Please mark APPLICATION on all application package envelopes and send to: State Justice Institute, 1650 King Street, Suite 600, Alexandria, Virginia 22314.

Receipt of each proposal will be acknowledged in writing. Extensions of the deadline for receipt of applications will not be granted. See section VII.C.11. for receipt deadlines for letters of support.

2. Applicants invited to submit more than one application may include material that would be identical in each application in a cover letter, and incorporate that material by reference in each application. The incorporated material will be counted against the 25-page (or in the case of package grant applications, the 40-page) limit for the program narrative. A copy of the cover letter should be attached to each copy of each application.

VIII. Application Review Procedures

A. Preliminary Inquiries

The Institute staff will answer inquiries concerning application procedures. The staff contact will be named in the Institute's letter inviting submission of a formal application.

B. Selection Criteria

1. All applications will be rated on the basis of the criteria set forth below. The Institute will accord the greatest weight to the following criteria:

a. The soundness of the methodology;

b. The appropriateness of the proposed evaluation design;

c. The qualifications of the project's staff;

d. The applicant's management plan and organizational capabilities;

e. The reasonableness of the proposed budget;

f. The demonstration of need for the project;

g. The products and benefits resulting from the project;

h. The demonstration of cooperation and support of other agencies that may be affected by the project;

i. The proposed project's relationship to one of the ''Special Interest'' categories set forth in section II.B.; and

j. The degree to which the findings, procedures, training, technology, or other results of the project can be transferred to other jurisdictions.

2. ''Single jurisdiction'' applications submitted pursuant to section II.C.1. will also be rated on the proposed project's relation to one of the ''Special Interest'' categories set forth in section II.B. and on the special requirements listed in section II.C.1.b.

3. In determining which applicants to fund, the Institute will also consider whether the applicant is a State court, a national court support or education organization, a non-court unit of government, or other type of entity eligible to receive grants under the Institute's enabling legislation (see 42 U.S.C. 10705((6) (as amended) and Section IV above); the availability of financial assistance from other sources for the project; the amount and nature (cash or in-kind) of the applicant's match; the extent to which the proposed project would also benefit the Federal courts or help State courts enforce Federal constitutional and legislative requirements; and the level of appropriations available to the Institute in the current year and the amount expected to be available in succeeding fiscal years.

C. Review and Approval Process

Applications will be reviewed competitively by the Board of Directors.

The Institute staff will prepare a narrative summary of each application, and a rating sheet assigning points for each relevant selection criterion. When necessary, applications may also be reviewed by outside experts. Committees of the Board will review applications within assigned program categories and prepare recommendations to the full Board. The full Board of Directors will then decide which applications to approve for a grant. The decision to award a grant is solely that of the Board of Directors.

Awards approved by the Board will be signed by the Chairman of the Board on behalf of the Institute.

D. Return Policy

Unless a specific request is made, unsuccessful applications will not be returned. Applicants are advised that Institute records are subject to the provisions of the Federal Freedoms of Information Act, 5 U.S.C. 552.

E. Notification of Board Decision

The Institute will send written notice to applicants concerning all Board decisions to approve or deny their respective applications and the key issues and questions that arose during the review process. A decision by the Board to deny an application may not be appealed, but does not prohibit resubmission of a concept paper based on that application in a subsequent round of funding. The Institute will also notify the designated State contact listed in Appendix I when grants are approved by the Board to support projects that will be conducted by or involve courts in their State.

F. Response to Notification of Approval

Applicants have 30 days from the date of the latter notifying them that the Board has approved their application to respond to any revisions requested by the Board. If the requested revisions (or a reasonable schedule for submitting such revisions) have not been submitted to the Institute within 30 days after notification, the approval will be automatically rescinded and the application presented to the Board for reconsideration.

IX. Renewal Funding Procedures and Requirements

The Institute recognizes two types of renewal funding as described below—''continuation grants'' and ''on-going support grants.'' The award of an initial grant to support a project does not constitute a commitment by the Institute to renew funding. The Board of Directors anticipates allocating no more than $3 million of available FY 1996 grant funds for renewal grants.

A. Continuation Grants

1. Purpose and Scope

Continuation grants are intended to support projects with a limited duration that involve the same type of activities as the previous project. They are intended to enhance the specific program or service produced or established during the prior grant period. They may be used, for example, when a project is divided into two or more sequential phases, for secondary analysis of data obtained in an Institute-supported research project, or for more extensive testing of an innovative technology, procedure, or program developed with SJI grant support.

In order for a project to be considered for continuation funding, the grantee must have completed the project tasks and met all grant requirements and conditions in a timely manner, absent extenuating circumstances or prior Institute approval of changes to the project design. Continuation grants are not intended to provide support for a project for which the grantee has underestimated the amount of time or funds needed to accomplish the project tasks.

A continuation grant may be awarded for either a single project or for more than one project as a package grant (see sections III.J., V.C.1 and 3; and V.D.1 and 3.).

2. Application Procedures—Letters of Intent

In lieu of a concept paper, a grantee seeking a continuation grant must inform the Institute, by letter, of its intent to submit an application for such funding as soon as the need for renewal funding becomes apparent but not less than 120 days before the end of the current grant period.

a. A letter of intent must be no more than 3 single-spaced pages on 8½ by 11 inch paper and must contain a concise but thorough explanation of the need for continuation; an estimate of the funds to be requested; and a brief description of anticipated changes in scope, focus or audience of the project.

b. Letters of intent will not be reviewed competitively. Institute staff will review the proposed activities for the next project period and, within 30 days of receiving a letter of intent, inform the grantee of specific issues to be addressed in the continuation application and the date by which the application for a continuation grant must be submitted.

3. Application Format

An application for a continuation grant must include an application form, budget forms (with appropriate documentation), a project abstract conforming to the format set forth in section VII.B., a program narrative, a budget narrative, a disclosure of lobbying form (from applicants other than units of State or local government), and certain certifications and assurances.

The program narrative should conform to the length and format requirements set forth in section VII.C. However, rather than the topics listed in section VII.C., the program narrative of an application for a continuation grant should include:

a. *Project Objectives.* The applicant should clearly and concisely state what the continuation project is intended to accomplish.

b. *Need for Continuation.* The applicant should explain why continuation of the project is necessary to achieve the goals of the project, and how the continuation will benefit the participating courts or the courts community generally. That is, to what extent will the original goals and objectives of the project be unfulfilled if the project is not continued, and conversely, how will the findings or results of the project be enhanced by continuing the project?

A continuation application requesting a package grant to support more than one project should explain, in addition, how the proposed projects are related; how their operation and administration would be enhanced by the grant; the advantages of funding the projects as package rather than individually; and the disadvantages, if any, that would accrue by considering or funding them separately.

c. *Report of Current Project Activities.* The applicant should discuss the status of all activities conducted during the previous project period. Applicants should identify any activities that were not completed, and explain why. A continuation application requesting a package grant must describe separately the activities undertaken in each of the projects included within the proposed package.

d. *Evaluation Findings.* The applicant should present the key findings, impact, or recommendations resulting from the evaluation of the project, if they are available, and how they will be addressed during the proposed continuation. If the findings are not yet available, applicants should provide the date by which they will be submitted to the Institute. Ordinarily, the Board will

not consider an application for continuation funding until the Institute has received the evaluator's report.

e. *Tasks, Methods, Staff and Grantee Capability.* The applicant should fully describe any changes in the tasks to be performed, the methods to be used, the products of the project, and how and to whom those products will be disseminated, as well as any changes in the assigned staff or the grantee's organizational capacity. Applicants should include, in addition, the criteria and methods by which the proposed continuation project would be evaluated.

A continuation application for a package grant must address these issues separately for each project included in the proposed package, using the same alphabetic identifiers and project titles as in the original application.

f. *Task Schedule.* The applicant should present a detailed task schedule and timeline for the next project period. A continuation application for a package grant should include a separate task schedule and timeline for each project included in the proposed package, as well as a schedule and timeline that covers the package of projects as a whole. The same alphabetic identifiers and project titles used in the original application should be used to identify the component projects in the renewal application.

g. *Other Sources of Support.* The applicant should indicate why other sources of support are inadequate, inappropriate or unavailable.

4. Budget and Budget Narrative

The applicant should provide a complete budget and budget narrative conforming to the requirements set forth in paragraph VII.D. Changes in the funding level requested should be discussed in terms of corresponding increases or decreases in the scope of activities or services to be rendered.

A continuation application for a package grant must include a separate budget narrative identified alphabetically (i.e., A, B, C) and by project title for each project component.

5. References to Previously Submitted Material

An application for a continuation grant should not repeat information contained in a previously approved application or other previously submitted materials, but should provide specific references to such materials where appropriate.

6. Submission Requirements, Review and Approval Process, and Notification of Decision

The submission requirements set forth in section VII.E., other than the deadline for mailing, apply to applications for a continuation grant. Such applications will be rated on the selection criteria set forth in section VIII.B. The key findings and recommendations resulting from an evaluation of the project and the proposed response to those findings and recommendations will also be considered. The review and approval process, return policy, and notification procedures are the same as those for new projects set forth in sections VIII.C.–VIII.E.

B. On-going Support Grants

1. Purpose and Scope

On-going support grants are intended to support projects that are national in scope and that provide the State courts with services, programs or products for which there is a continuing important need. An on-going support grant may also be used to fund longitudinal research that directly benefits the State courts. On-going support grants are subject to the limits on size and duration set forth in V.C.2. and V.D.2. A project is eligible for consideration for an on-going support grant if:

a. The project is supported by and has been evaluated under a grant from the Institute;

b. The project is national in scope and provides a significant benefit to the State courts;

c. There is a continuing important need for the services, programs or products provided by the project as indicated by the level of use and support by members of the court community;

d. The project is accomplishing its objectives in an effective and efficient manner; and

e. It is likely that the service or program provided by the project would be curtailed or significantly reduced without Institute support.

Each project supported by an on-going support grant must include an evaluation component assessing its effectiveness and operation throughout the grant period. The evaluation should be independent, but may be designed collaboratively by the evaluator and the grantee. The design should call for regular feedback from the evaluator to the grantee throughout the project period concerning recommendations for mid-course corrections or improvement of the project, as well as periodic reports to the Institute at relevant points in the project.

An interim evaluation report must be submitted 18 months into the grant period. The decision to obligate Institute funds to support the third year of the project will be based on the interim evaluation findings and the applicant's response to any deficiencies noted in the report.

A final evaluation assessing the effectiveness, operation of, and continuing need for the project must be submitted 90 days before the end of the 3-year project period.

In addition, a detailed annual task schedule must be submitted not later than 45 days before the end of the first and second years of the grant period, along with an explanation of any necessary revisions in the projected costs for the remainder of the project period. (See also section IX.B.3.h.)

2. Application Procedures—Letters of Intent

The Board will consider awarding an on-going support grant for a period of up to 36 months. The total amount of the grant will be fixed at the time of the initial award. Funds ordinarily will be made available in annual increments as specified in section V.C.2.

In lieu of a concept paper, a grantee seeking an on-going support grant must inform the Institute, by letter, of its intent to submit an application for such funding as soon as the need for renewal funding becomes apparent but no less than 120 days before the end of the current grant period. The letter of intent should be in the same format as that prescribed for continuation grants in section IX.A.2.a.

3. Application Procedures and Format

An application for an on-going support grant must include an application form, budget forms (with appropriate documentation), a project abstract conforming to the format set forth in section VII.B., a program narrative, a budget narrative, and certain certifications and assurances.

The program narrative should conform to the length and format requirements set forth in section VII.C. However, rather than the topics listed in section VII.C., the program narrative of applications for on-going support grants should address:

a. *Description of Need for and Benefits of the Project.* The applicant should provide a detailed discussion of the benefits provided by the project to the State courts around the country, including the degree to which State courts, State court judges, or State court managers and personnel are using the services or programs provided by the project.

An application for on-going support of a package grant should explain, in addition, how the proposed projects are related; how their operation and administration would be enhanced by the grant; the advantages of funding the projects as a package rather than individually; and the disadvantages, if any, that would accrue by considering or funding them separately.

b. *Demonstration of Court Support.* The applicant should demonstrate support for the continuation of the project from the courts community.

c. *Report on Current Project Activities.* The applicant should discuss the extent to which the project has met its goals and objectives, identify any activities that have not been completed, and explain why. An application for on-going support of a package grant must describe separately the activities undertaken in each of the projects included within the proposed package.

d. *Evaluation Findings.* The applicant should attach a copy of the final evaluation report regarding the effectiveness, impact, and operation of the project, specify the key findings or recommendations resulting from the evaluation, and explain how they will be addressed during the proposed renewal period. Ordinarily, the Board will not consider an application for on-going support until the Institute has received the evaluator's report.

e. *Objectives, Tasks, Methods, Staff and Grantee Capability.* The applicant should describe fully any changes in the objectives; tasks to be performed; the methods to be used; the products of the project; how and to whom those products will be disseminated; the assigned staff; and the grantee's organizational capacity.

An application for on-going support of a package grant must address these issues separately for each project included in the proposed package, using the same alphabetic identifiers and project titles as in the original application.

f. *Task Schedule.* The applicant should present a general schedule for the full proposed project period and a detailed task schedule for the first year of the proposed new project period. An application for on-going support of a package grant should include a separate task schedule and timeline for each project included in the proposed package, as well as a schedule and timeline that covers the package of projects as a whole. The same alphabetic identifiers and project titles used in the original application should be used to identify the component projects in the renewal application.

g. *Other Sources of Support.* The applicant should indicate why other sources of support are inadequate, inappropriate or unavailable.

4. Budget and Budget Narrative

The applicant should provide a complete three-year budget and budget narrative conforming to the requirements set forth in paragraph VII.D. Changes in the funding level requested should be discussed in terms of corresponding increases or decreases in the scope of activities or services to be rendered. A complete budget narrative should be provided for each year, or portion of a year, for which grant support is requested. Changes in the funding level requested should be discussed in terms of corresponding increases or decreases in the scope of activities or services to be rendered. The budget should provide for realistic cost-of-living and staff salary increases over the course of the requested project period. Applicants should be aware that the Institute is unlikely to approve a supplemental budget increase for an on-going support grant in the absence of well-documented, unanticipated factors that clearly justify the requested increase.

A continuation application for a package grant must include a separate budget narrative identified alphabetically (i.e. A, B, C) and by project title for each project component.

5. References to Previously Submitted Material

An application for an on-going support grant should not repeat information contained in a previously approved application or other previously submitted materials, but should provide specific references to such materials where appropriate.

6. Submission Requirements, Review and Approval Process, and Notification of Decision

The submission requirements set forth in section VII.E., other than the deadline for mailing, apply to applications for an on-going support grant. Such applications will be rated on the selection criteria set forth in section VIII.B. The key findings and recommendations resulting from an evaluation of the project and the proposed response to those findings and recommendations will also be considered. The review and approval process, return policy, and notification procedures are the same as those for new projects set forth in sections VIII.C.–VIII.E.

X. Compliance Requirements

The State Justice Institute Act contains limitations and conditions on grants, contracts and cooperative agreements of which applicants and recipients should be aware. In addition to eligibility requirements which must be met to be considered for an award from the Institute, all applicants should be aware of and all recipients will be responsible for ensuring compliance with the following:

A. State and Local Court Systems

Each application for funding from a State or local court must be approved, consistent with State law, by the State's Supreme Court, or its designated agency or council. The Supreme Court or its designee shall receive, administer, and be accountable for all funds awarded on the basis of such an application. 42 U.S.C. 10705(b)(4). Appendix I to this Guideline lists the person to contact in each State regarding the administration of Institute grants to State and local courts.

B. Matching Requirements

1. All awards to courts or other units of State or local government (not including publicly supported institutions of higher education) require a match from private or public sources of not less than 50% of the total amount of the Institute's award. For example, if the total cost of a project is anticipated to be $150,000, a State court or executive branch agency may request up to $100,000 from the Institute to implement the project. The remaining $50,000 (50% of the $100,000 requested from SJI) must be provided as a match. A cash match, non-cash match, or both may be provided, but the Institute will give preference to those applicants who provide a cash match to the Institute's award. (For a further definition of match, see section III.F.)

The requirement to provide match may be waived in exceptionally rare circumstances upon approval of the Chief Justice of the highest court in the State and a majority of the Board of Directors. 42 U.S.C. 10705(d).

2. Other eligible recipients of Institute funds are not required to provide a match, but are encouraged to contribute to meeting the costs of the project. In instances where match is proposed, the grantee is responsible for ensuring that the total amount proposed is actually contributed. If a proposed contribution is not fully met, the Institute may reduce the award amount accordingly, in order to maintain the ratio originally provided for in the award agreement (see sections VIII.B. above and XI.D.).

C. Conflict of Interest

Personnel and other officials connected with Institute-funded programs shall adhere to the following requirements:

1. No official or employee of a recipient court or organization shall participate personally through decision, approval, disapproval, recommendation, the rendering of advice, investigation, or otherwise in any proceeding, application, request for a ruling or other determination, contract, grant, cooperative agreement, claim, controversy, or other particular matter in which Institute funds are used, where to his/her knowledge he/she or his/her immediate family, partners, organization other than a public agency in which he/she is serving as officer, director, trustee, partner, or employee or any person or organization with whom he/she is negotiating or has any arrangement concerning prospective employment, has a financial interest.

2. In the use of Institute project funds, an official or employee of a recipient court or organization shall avoid any action which might result in or create the appearance of:

a. Using an official position for private gain; or

b. Affecting adversely the confidence of the public in the integrity of the Institute program.

3. Requests for proposals or invitations for bids issued by a recipient of Institute funds or a subgrantee or subcontractor will provide notice to prospective bidders that the contractors who develop or draft specifications, requirements, statements of the work and/or requests for proposals for a proposed procurement will be excluded from bidding on or submitting a proposal to compete for the award of such procurement.

D. Lobbying

Funds awarded to recipients by the Institute shall not be used, indirectly or directly, to influence Executive orders or similar promulgations by Federal, State or local agencies, or to influence the passage or defeat of any legislation by Federal, State or local legislative bodies, 42 U.S.C. 10706(a).

It is the policy of the Board of Directors to award funds only to support applications submitted by organizations that would carry out the objectives of their applications in an unbiased manner. Consistent with this policy and the provisions of 42 U.S.C. 10706, the Institute will not knowingly award a grant to an applicant that has, directly or through an entity that is part of the same organization as the applicant, advocated a position before Congress on the specific subject matter of the application.

E. Political Activities

No recipient shall contribute or make available Institute funds, program personnel, or equipment to any political party or association, or the campaign of any candidate for public or party office. Recipients are also prohibited from using funds in advocating or opposing any ballot measure, initiative, or referendum. Finally, officers and employees of recipients shall not intentionally identify the Institute or recipients with any partisan or nonpartisan political activity associated with a political party or association, or the campaign of any candidate for public or party office. 42 U.S.C. 10706(a).

F. Advocacy

No funds made available by the Institute may be used to support or conduct training programs for the purpose of advocating particular nonjudicial public policies or encouraging nonjudicial political activities. 42 U.S.C. 10706(b).

G. Prohibition Against Litigation Support

No funds made available by the Institute may be used directly or indirectly to support legal assistance to parties in litigation, including cases involving capital punishment.

H. Supplantation and Construction

To ensure that funds are used to supplement and improve the operation of State courts, rather than to support basic court services, funds shall not be used for the following purposes:

1. To supplant State or local funds supporting a program or activity (such as paying the salary of court employees who would be performing their normal duties as part of the project, or paying rent for space which is part of the court's normal operations);

2. To construct court facilities or structures, except to remodel existing facilities or to demonstrate new architectural or technological techniques, or to provide temporary facilities for new personnel or for personnel involved in a demonstration or experimental program; or

3. Solely to purchase equipment.

I. Confidentiality of Information

Except as provided by Federal law other than the State Justice Institute Act, no recipient of financial assistance from SJI may use or reveal any research or statistical information furnished under the Act by any person and identifiable to any specific private person for any purpose other than the purpose for which the information was obtained. Such information and copies thereof shall be immune from legal process, and shall not, without the consent of the person furnishing such information, be admitted as evidence or used for any purpose in any action, suit, or other judicial, legislative, or administrative proceedings.

J. Human Research Protection

All research involving human subjects shall be conducted with the informed consent of those subjects and in a manner that will ensure their privacy and freedom from risk or harm and the protection of persons who are not subjects of the research but would be affected by it, unless such procedures and safeguards would make the research impractical. In such instances, the Institute must approve procedures designed by the grantee to provide human subjects with relevant information about the research after their involvement and to minimize or eliminate risk or harm to those subjects due to their participation.

K. Nondiscrimination

No person may, on the basis of race, sex, national origin, disability, color, or creed be excluded from participation in, denied the benefits of, or otherwise subjected to discrimination under any program or activity supported by Institute funds. Recipients of Institute funds must immediately take any measures necessary to effectuate this provision.

L. Reporting Requirements

Recipients of Institute funds, other than scholarships awarded under section II.B.2.b.v., shall submit Quarterly Progress and Financial Reports within 30 days of the close of each calendar quarter (that is, no later than January 30, April 30, July 30, and October 30). Two copies of each report must be sent. The Quarterly Progress Reports shall include a narrative description of project activities during the calendar quarter, the relationship between those activities and the task schedule and objectives set forth in the approved application or an approved adjustment thereto, any significant problem areas that have developed and how they will be resolved, and the activities scheduled during the next reporting period.

The quarterly financial status report shall be submitted in accordance with section XI.G.2. of this Guideline. A final project progress report and financial

status report shall be submitted within 90 days after the end of the grant period in accordance with section XI.K.2. of this Guideline.

M. Audit

Each recipient must provide for an annual fiscal audit which shall include an opinion on whether the financial statements of the grantee present fairly its financial position and financial operations are in accordance with generally accepted accounting principles. (See section XI.J. of the Guideline for the requirements of such audits.)

N. Suspension of Funding

After providing a recipient reasonable notice and opportunity to submit written documentation demonstrating why fund termination or suspension should not occur, the Institute may terminate or suspend funding of a project that fails to comply substantially with the Act, Institute Guideline, or the terms and conditions of the award. 42 U.S.C. 10708(a).

O. Title to Property

At the conclusion of the project, title to all expendable and nonexpendable personal property purchased with Institute funds shall vest in the recipient court, organization, or individual that purchased the property if certification is made to the Institute that the property will continue to be used for the authorized purposes of the Institute-funded project or other purposes consistent with the State Justice Institute Act, as approved by the Institute. If such certification is not made or the Institute disapproves such certification, title to all such property with an aggregate or individual value of $1,000 or more shall vest in the Institute, which will direct the disposition of the property.

P. Original Material

All products prepared as the result of Institute-supported projects must be originally-developed material unless otherwise specified in the award documents. Material not originally developed that is included in such products must be properly identified, whether the material is in a verbatim or extensive paraphrase format.

Q. Acknowledgment and Disclaimer

Recipients of Institute funds shall acknowledge prominently on all products developed with grant funds that support was received from the Institute. The ''SJI'' logo must appear on the front cover of a written product, or in the opening frames of a video product, unless another placement is approved in writing by the Institute. This includes final products printed or otherwise reproduced during the grant period, as well as reprintings or reproductions of those materials following the end of the grant period. A camera-ready logo sheet is available from the Institute upon request.

Recipients also shall display the following disclaimer on all grant products:

''This [document, film, videotape, etc.] was developed under [grant/cooperative agreement, number SJI–(insert number)] from the State Justice Institute. The points of view expressed are those of the [author(s), filmmaker(s), etc.] and do not necessarily represent the official position or policies of the State Justice Institute.''

R. Institute Approval of Grant Products

No grant funds may be obligated for publication or reproduction of a final product developed with grant funds without the written approval of the Institute. Grantees shall submit a final draft of each written product to the Institute for review and approval. These drafts shall be submitted at least 30 days before the product is scheduled to be sent for publication or reproduction to permit Institute review and incorporation of any appropriate changes agreed upon by the grantee and the Institute. Grantees shall provide for timely reviews by the Institute of videotape or CD–ROM products at the treatment, script, rough cut, and final stages of development or their equivalents, prior to initiating the next stage of product development.

S. Distribution of Grant Products

In addition to the distribution specified in the grant application, grantees shall send:

1. Twenty copies of each final product developed with grant funds to the Institute, unless the product was developed under either a curriculum adaptation or a technical assistance grant, in which case submission of 2 copies is required.

2. A mastercopy of each videotape produced with grant funds to the Institute.

3. A one-page abstract to the Institute summarizing the products produced during the project for posting on the Internet together with a diskette containing the abstract in Word, WordPerfect, or ASCII. The abstract should include the grant number, a contact name, address, telephone numbers, and e-mail address (if applicable).

4. One copy of each final product developed with grant funds to the library established in each State to collect materials prepared with Institute support. (A list of these libraries is contained in Appendix II. Labels for these libraries are available from the Institute upon request.) Recipients of curriculum adaptation and technical assistance grants are not required to submit final products to State libraries.

T. Copyrights

Except as otherwise provided in the terms and conditions of an Institute award, a recipient is free to copyright any books, publications, or other copyrightable materials developed in the course of an Institute-supported project, but the Institute shall reserve a royalty-free, nonexclusive and irrevocable right to reproduce, publish, or otherwise use, and to authorize others to use, the materials for purposes consistent with the State Justice Institute Act.

U. Inventions and Patents

If any patentable items, patent rights, processes, or inventions are produced in the course of Institute-sponsored work, such fact shall be promptly and fully reported to the Institute. Unless there is a prior agreement between the grantee and the Institute on disposition of such items, the Institute shall determine whether protection of the invention or discovery shall be sought. The Institute will also determine how the rights in the invention or discovery, including rights under any patent issued thereon, shall be allocated and administered in order to protect the public interest consistent with ''Government Patent Policy'' (President's Memorandum for Heads of Executive Departments and Agencies, February 18, 1983, and statement of Government Patent Policy).

V. Charges for Grant-Related Products/ Recovery of Costs

When Institute funds fully cover the cost of developing, producing, and disseminating a product (e.g., a report, curriculum, videotape or software), the product should be distributed to the field without charge. When Institute funds only partially cover the development, production, or dissemination costs, the grantee may, with the Institute's prior written approval, recover its costs for developing, producing, and disseminating the material to those requesting it, to the extent that those costs were not covered by Institute funds or grantee matching contributions.

Applicants should disclose their intent to sell grant-related products in both the concept paper and the

application. Grantees must obtain the written, prior approval of the Institute of their plans to recover project costs through the sale of grant products.

Written requests to recover costs ordinarily should be received during the grant period and should specify the nature and extent of the costs to be recouped, the reason that such costs were not budgeted (if the rationale was not disclosed in the approved application), the number of copies to be sold, the intended audience for the products to be sold, and the proposed sale price. If the product is to be sold for more than $25.00, the written request also should include a detailed itemization of costs that will be recovered and a certification that the costs were not supported by either Institute grant funds or grantee matching contributions.

In the event that the sale of grant products results in revenues that exceed the costs to develop, produce, and disseminate the product, the revenue must continue to be used for the authorized purposes of the Institute-funded project or other purposes consistent with the State Justice Institute Act that have been approved by the Institute. See sections III.F. and XI.F. for requirements regarding project-related income realized during the project period.

W. Availability of Research Data for Secondary Analysis

Upon request, grantees must make available for secondary analysis a diskette(s) or data tape(s) containing research and evaluation data collected under an Institute grant and the accompanying code manual. Grantees may recover the actual cost of duplicating and mailing or otherwise transmitting the data set and manual from the person or organization requesting the data. Grantees may provide the requested data set in the format in which it was created and analyzed.

X. Approval of Key Staff

If the qualifications of an employee or consultant assigned to a key project staff position are not described in the application or if there is a change of a person assigned to such a position, a recipient shall submit a description of the qualifications of the newly assigned person to the Institute. Prior written approval of the qualifications of the new person assigned to a key staff position must be received from the Institute before the salary or consulting fee of that person and associated costs may be paid or reimbursed from grant funds.

XI. Financial Requirements

A. Accounting Systems and Financial Records

All grantees, subgrantees, contractors, and other organizations directly or indirectly receiving Institute funds are required to establish and maintain accounting systems and financial records to accurately account for funds they receive. These records shall include total program costs, including Institute funds, State and local matching shares, and any other fund sources included in the approved project budget.

1. Purpose

The purpose of this section is to establish accounting system requirements and to offer guidance on procedures which will assist all grantees/subgrantees in:

a. Complying with the statutory requirements for the awarding, disbursement, and accounting of funds;

b. Complying with regulatory requirements of the Institute for financial management and disposition of funds;

c. Generating financial data which can be used in the planning, management and control of programs; and

d. Facilitating an effective audit of funded programs and projects.

2. References

Except where inconsistent with specific provisions of this Guideline, the following regulations, directives and reports are applicable to Institute grants and cooperative agreements under the same terms and conditions that apply to Federal grantees. These materials supplement the requirements of this section for accounting systems and financial recordkeeping and provide additional guidance on how these requirements may be satisfied. (Circulars may be obtained from OMB by calling 202–395–7250.)

a. *Office of Management and Budget (OMB) Circular A–21,* Cost Principles for Educational Institutions.

b. *Office of Management and Budget (OMB) Circular A–87,* Cost Principles for State and Local Governments.

c. *Office of Management and Budget (OMB) Circular A–88 (revised),* Indirect Cost Rates, Audit and Audit Follow-up at Educational Institutions.

d. *Office of Management and Budget (OMB) Circular A–102,* Uniform Administrative Requirements for Grants-in-Aid to State and Local Governments.

e. *Office of Management and Budget (OMB) Circular A–110,* Grants and Agreements with Institutions of Higher Education, Hospitals and other Non-Profit Organizations.

f. *Office of Management and Budget (OMB) Circular A–128,* Audits of State and Local Governments.

g. *Office of Management and Budget (OMB) Circular A–122,* Cost Principles for Non-profit Organizations.

h. *Office of Management and Budget (OMB) Circular A–133,* Audits of Institutions of Higher Education and Other Non-profit Institutions.

B. Supervision and Monitoring Responsibilities

1. Grantee Responsibilities

All grantees receiving direct awards from the Institute are responsible for the management and fiscal control of all funds. Responsibilities include accounting for receipts and expenditures, maintaining adequate financial records and refunding expenditures disallowed by audits.

2. Responsibilities of State Supreme Court

Each application for funding from a State or local court must be approved, consistent with State law, by the State's Supreme Court, or its designated agency or council.

The State Supreme Court or its designee shall receive all Institute funds awarded to such courts; shall be responsible for assuring proper administration of Institute funds; and shall be responsible for all aspects of the project, including proper accounting and financial recordkeeping by the subgrantee. These responsibilities include:

a. *Reviewing Financial Operations.* The State Supreme Court or its designee should be familiar with, and periodically monitor, its subgrantees' financial operations, records system and procedures. Particular attention should be directed to the maintenance of current financial data.

b. *Recording Financial Activities.* The subgrantee's grant award or contract obligation, as well as cash advances and other financial activities, should be recorded in the financial records of the State Supreme Court or its designee in summary form. Subgrantee expenditures should be recorded on the books of the State Supreme Court *OR* evidenced by report forms duly filed by the subgrantee. Non-Institute contributions applied to projects by subgrantees should likewise be recorded, as should any project income resulting from program operations.

c. *Budgeting and Budget Review.* The State Supreme Court or its designee should ensure that each subgrantee prepares an adequate budget as the basis for its award commitment. The detail of each project budget should be

maintained on file by the State Supreme Court.

d. *Accounting for Non-Institute Contributions.* The State Supreme Court or its designee will ensure, in those instances where subgrantees are required to furnish non-Institute matching funds, that the requirements and limitations of this guideline are applied to such funds.

e. *Audit Requirement.* The State Supreme Court or its designee is required to ensure that subgrantees have met the necessary audit requirements as set forth by the Institute (see sections X.M. and XI.J).

f. *Reporting Irregularities.* The State Supreme Court, its designees, and its subgrantees are responsible for promptly reporting to the Institute the nature and circumstances surrounding any financial irregularities discovered.

C. Accounting System

The grantee is responsible for establishing and maintaining an adequate system of accounting and internal controls for itself and for ensuring that an adequate system exists for each of its subgrantees and contractors. An acceptable and adequate accounting system is considered to be one which:

1. Properly accounts for receipt of funds under each grant awarded and the expenditure of funds for each grant by category of expenditure (including matching contributions and project income);
2. Assures that expended funds are applied to the appropriate budget category included within the approved grant;
3. Presents and classifies historical costs of the grant as required for budgetary and evaluation purposes;
4. Provides cost and property controls to assure optimal use of grant funds;
5. Is integrated with a system of internal controls adequate to safeguard the funds and assets covered, check the accuracy and reliability of the accounting data, promote operational efficiency, and assure conformance with any general or special conditions of the grant;
6. Meets the prescribed requirements for periodic financial reporting of operations; and
7. Provides financial data for planning, control, measurement and evaluation of direct and indirect costs.

D. Total Cost Budgeting and Accounting

Accounting for all funds awarded by the Institute shall be structured and executed on a ''total project cost'' basis. That is, total project costs, including Institute funds, State and local matching shares, and any other fund sources included in the approved project budget shall be the foundation for fiscal administration and accounting. Grant applications and financial reports require budget and cost estimates on the basis of total costs.

1. Timing of Matching Contributions

Matching contributions need not be applied at the exact time of the obligation of Institute funds. However, the full matching share must be obligated during the award period, except that with the prior written permission of the Institute, contributions made following approval of the grant by the Institute's Board but before the beginning of the grant may be counted as match. Grantees that do not contemplate making matching contributions continuously throughout the course of a project or on a task-by-task basis, are required to submit a schedule within 30 days after the beginning of the project period indicating at what points during the project period the matching contributions will be made. In instances where a proposed cash match is not fully met, the Institute may reduce the award amount accordingly, in order to maintain the ratio originally provided for in the award agreement.

2. Records for Match

All grantees must maintain records which clearly show the source, amount, and timing of all matching contributions. In addition, if a project has included, within its approved budget, contributions which exceed the required matching portion, the grantee must maintain records of those contributions in the same manner as it does the Institute funds and required matching shares. For all grants made to State and local courts, the State Supreme Court has primary responsibility for grantee/subgrantee compliance with the requirements of this section. (See section XI.B.2.)

E. Maintenance and Retention of Records

All financial records, supporting documents, statistical records and all other records pertinent to grants, subgrants, cooperative agreements or contracts under grants shall be retained by each organization participating in a project for at least three years for purposes of examination and audit. State Supreme Courts may impose record retention and maintenance requirements in addition to those prescribed in this chapter.

1. Coverage

The retention requirement extends to books of original entry, source documents supporting accounting transactions, the general ledger, subsidiary ledgers, personnel and payroll records, canceled checks, and related documents and records. Source documents include copies of all grant and subgrant awards, applications, and required grantee/subgrantee financial and narrative reports. Personnel and payroll records shall include the time and attendance reports for all individuals reimbursed under a grant, subgrant or contract, whether they are employed full-time or part-time. Time and effort reports will be required for consultants.

2. Retention Period

The three-year retention period starts from the date of the submission of the final expenditure report or, for grants which are renewed annually, from the date of submission of the annual expenditure report.

3. Maintenance

Grantees and subgrantees are expected to see that records of different fiscal years are separately identified and maintained so that requested information can be readily located. Grantees and subgrantees are also obligated to protect records adequately against fire or other damage. When records are stored away from the grantee's/subgrantee's principal office, a written index of the location of stored records should be on hand, and ready access should be assured.

4. Access

Grantees and subgrantees must give any authorized representative of the Institute access to and the right to examine all records, books, papers, and documents related to an Institute grant.

F. Project-Related Income

Records of the receipt and disposition of project-related income must be maintained by the grantee in the same manner as required for the project funds that gave rise to the income. The policies governing the disposition of the various types of project-related income are listed below.

1. Interest

A State and any agency or instrumentality of a State including State institutions of higher education and State hospitals, shall not be held accountable for interest earned on advances of project funds. When funds are awarded to subgrantees through a State, that subgrantees are not held

accountable for interest earned on advances of project funds. Local units of government and nonprofit organizations that are direct grantees must refund any interest earned. Grantees shall order their affairs so as to ensure minimum balances in their respective grant cash accounts.

2. Royalties

The grantee/subgrantee may retain all royalties received from copyrights or other works developed under projects or from patents and inventions, unless the terms and conditions of the project provide otherwise.

3. Registration and Tuition Fees

Registration and tuition fees shall be used to pay project-related costs not covered by the grant, or to reduce the amount of grant funds needed to support the project. Registration and tuition fees may be used for other purposes only with the prior written approval of the Institute. Estimates of registration and tuition fees, and any expenses to be offset by the fees, should be included in the application budget forms and narrative.

4. Income from the Sale of Grant Products

When grant funds fully cover the cost of producing and disseminating a limited number of copies of a product, the grantee may, with the written prior approval of the Institute, sell additional copies reproduced at its expense only at a price intended to recover actual reproduction and distribution costs that were not covered by Institute grant funds or grantee matching contributions to the project. When grant funds only partially cover the costs of developing, producing and disseminating a product, the grantee may, with the written prior approval of the Institute, recover costs for developing, reproducing, and disseminating the material to the extent that those costs were not covered by Institute grant funds or grantee matching contributions. If the grantee recovered its costs in this manner, then amounts expended by the grantee to develop, produce, and disseminate the material may not be considered match.

If the sale of products occurs during the project period, the costs and income generated by the sales must be reported on the Quarterly Financial Status Reports and documented in an auditable manner. Whenever possible, the intent to sell a product should be disclosed in the concept paper and application or reported to the Institute in writing once a decision to sell products has been made. The grantee must request approval to recover its product development, reproduction, and dissemination costs as specified in section X.V.

5. Other

Other project income shall be treated in accordance with disposition instructions set forth in the project's terms and conditions.

G. Payments and Financial Reporting Requirements

1. Payment of Grant Funds

The procedures and regulations set forth below are applicable to all Institute grant funds and grantees.

a. *Request for Advance or Reimbursement of Funds.* Grantees will receive funds on a ''Check-Issued'' basis. Upon receipt, review, and approval of a Request for Advance or Reimbursement by the Institute, a check will be issued directly to the grantee or its designated fiscal agent. A request must be limited to the grantee's immediate cash needs. The Request for Advance or Reimbursement, along with the instructions for its preparation, will be included in the official Institute award package.

Payment requests for projects within a package grant may be submitted at the same time, but must be identified by component project. The alphabetic project identifier (A, B, C, etc.) should be appended to the grant number in Block 5 of the Request for Advance or Reimbursement. (See Recommendations to Grantees in the Introduction for further guidance.)

b. *Continuation and On-Going Support Awards.* For purposes of submitting Requests for Advance or Reimbursement, recipients of continuation and on-going support grants should treat each grant as a new project and number their requests accordingly (i.e. on a grant rather than a project basis). For example, the first request for payment from a continuation grant or each year of an on-going support would be number 1, the second number 2, etc. (See Recommendations to Grantees in the Introduction for further guidance.)

c. *Termination of Advance and Reimbursement Funding.* When a grantee organization receiving cash advances from the Institute:

i. Demonstrates an unwillingness or inability to attain program or project goals, or to establish procedures that will minimize the time elapsing between cash advances and disbursements, or cannot adhere to guideline requirements or special conditions;

ii. Engages in the improper award and administration of subgrants or contracts; or

iii. Is unable to submit reliable and/or timely reports;

the Institute may terminate advance financing and require the grantee organization to finance its operations with its own working capital. Payments to the grantee shall then be made by check to reimburse the grantee for actual cash disbursements. In the event the grantee continues to be deficient, the Institute reserves the right to suspend reimbursement payments until the deficiencies are corrected.

d. *Principle of Minimum Cash on Hand.* Recipient organizations should request funds based upon immediate disbursement requirements. Grantees should time their requests to ensure that cash on hand is the minimum needed for disbursements to be made immediately or within a few days. Idle funds in the hands of subgrantees will impair the goals of good cash management.

2. Financial Reporting

a. *General Requirements.* In order to obtain financial information concerning the use of funds, the Institute requires that grantees/subgrantees of these funds submit timely reports for review.

Three copies of the Financial Status Report are required from all grantees, other than recipients of scholarships under section II.B.2.b.v., for each active quarter on a calendar-quarter basis. This report is due within 30 days after the close of the calendar quarter. It is designed to provide financial information relating to Institute funds, State and local matching shares, and any other fund sources included in the approved project budget. The report contains information on obligations as well as outlays. A copy of the Financial Status Report, along with instructions for its preparation, will be included in the official Institute Award package. In circumstances where an organization requests substantial payments for a project prior to the completion of a given quarter, the Institute may request a brief summary of the amount requested, by object class, in support of the Request for Advance or Reimbursement.

b. *Additional Requirements for Renewal Grants.* Grantees receiving a continuation or on-going support grant should number their quarterly Financial Status Reports on a grant rather than a project basis. For example, the first quarterly report for a continuation grant or each year of an on-going support award should be number 1, the second number 2, etc.

c. *Additional Requirements for Package Grants.* Grantees receiving a package grant must submit a quarterly financial report summarizing the financial activity for the entire package and separate reports for each project within the package. On the separate reports for the component projects, the alphabetic project identifier (A, B, C, etc.) must be appended to the grant number in Block 5 of the Financial Status Report.

3. Consequences of Non-Compliance With Submission Requirements

Failure of the grantee organization to submit required financial and program reports may result in a suspension of grant payments or revocation of the grant award.

H. Allowability of Costs

1. General

Except as may be otherwise provided in the conditions of a particular grant, cost allowability shall be determined in accordance with the principles set forth in *OMB Circulars A–87,* Cost Principles for State and Local Governments; *A–21,* Cost Principles Applicable to Grants and Contracts with Educational Institutions; and *A–122,* Cost Principles for Non-Profit Organizations. No costs may be recovered to liquidate obligations which are incurred after the approved grant period. Copies of these circulars may be obtained from OMB by calling (202) 395–7250.

2. Costs Requiring Prior Approval

a. *Preagreement Costs.* The written prior approval of the Institute is required for costs which are considered necessary to the project but occur prior to the award date of the grant.

b. *Equipment.* Grant funds may be used to purchase or lease only that equipment which is essential to accomplishing the goals and objectives of the project. The written prior approval of the Institute is required when the amount of automated data processing (ADP) equipment to be purchased or leased exceeds $10,000 or the software to be purchased exceeds $3,000.

c. *Consultants.* The written prior approval of the Institute is required when the rate of compensation to be paid a consultant exceeds $300 a day.

3. Travel Costs

Transportation and per diem rates must comply with the policies of the applicant organization. If the applicant does not have an established written travel policy, then travel rates shall be consistent with those established by the Institute or the Federal Government. Institute funds shall not be used to cover the transportation or per diem costs of a member of a national organization to attend an annual or other regular meeting of that organization.

4. Indirect Costs

These are costs of an organization that are not readily assignable to a particular project, but are necessary to the operation of the organization and the performance of the project. The cost of operating and maintaining facilities, depreciation, and administrative salaries are examples of the types of costs that are usually treated as indirect costs. It is the policy of the Institute that all costs should be budgeted directly; however, if a recipient has an indirect cost rate approved by a Federal agency as set forth below, the Institute will accept that rate.

a. *Approved Plan Available.*

i. The Institute will accept an indirect cost rate or allocation plan approved for a grantee during the preceding two years by any Federal granting agency on the basis of allocation methods substantially in accord with those set forth in the applicable cost circulars. A copy of the approved rate agreement must be submitted to the Institute.

ii. Where flat rates are accepted in lieu of actual indirect costs, grantees may not also charge expenses normally included in overhead pools, e.g., accounting services, legal services, building occupancy and maintenance, etc., as direct costs.

iii. Organizations with an approved indirect cost rate, utilizing total direct costs as the base, usually exclude contracts under grants from any overhead recovery. The negotiated agreement will stipulate that contracts are excluded from the base for overhead recovery.

b. *Establishment of Indirect Cost Rates.* In order to be reimbursed for indirect costs, a grantee or organization must first establish an appropriate indirect cost rate. To do this, the grantee must prepare an indirect cost rate proposal and submit it to the Institute. The proposal must be submitted within three months after the start of the grant period to assure recovery of the full amount of allowable indirect costs, and it must be developed in accordance with principles and procedures appropriate to the type of grantee institution involved as specified in the applicable OMB Circular. Copies of OMB Circulars may be obtained directly from OMB by calling (202) 395–7250.

c. *No Approved Plan.* If an indirect cost proposal for recovery of actual indirect costs is not submitted to the Institute within three months after the start of the grant period, indirect costs will be irrevocably disallowed for all months prior to the month that the indirect cost proposal is received. This policy is effective for all grant awards.

I. Procedure and Property Management Standards

1. Procurement Standards

For State and local governments, the Institute is adopting the standards set forth in Attachment O of *OMB Circular A–102.* Institutions of higher education, hospitals, and other non-profit organizations will be governed by the standards set forth in Attachment O of *OMB Circular A–110.*

2. Property Management Standards

The property management standards as prescribed in Attachment N of *OMB Circulars A–102* and *A–110* shall be applicable to all grantees and subgrantees of Institute funds except as provided in section X.O.

All grantees/subgrantees are required to be prudent in the acquisition and management of property with grant funds. If suitable property required for the successful execution of projects is already available within the grantee or subgrantee organization, expenditures of grant funds for the acquisition of new property will be considered unnecessary.

J. Audit Requirements

1. Implementation

Each non-scholarship grantee (including a State or local court receiving a subgrant from the State Supreme Court) shall provide for an annual fiscal audit. The audit may be of the entire grantee organization (e.g., a university) or of the specific project funded by the Institute. Audits conducted in accordance with the Single Audit Act of 1984 and OMB Circular A–128, or OMB Circular A–133 will satisfy the requirement for an annual fiscal audit. The audit shall be conducted by an independent Certified Public Accountant, or a State or local agency authorized to audit government agencies.

Grantees who receive funds from a Federal agency and who satisfy audit requirements of the cognizant Federal agency, should submit a copy of the audit report prepared for that Federal agency to the Institute in order to satisfy the provisions of this section. Cognizant Federal agencies do not send reports to the Institute. Therefore, each grantee must send this report directly to the Institute.

2. Resolution and Clearance of Audit Reports

Timely action on recommendations by responsible management officials is an integral part of the effectiveness of an audit. Each grant recipient shall have policies and procedures for acting on audit recommendations by designating officials responsible for: follow-up, maintaining a record of the actions taken on recommendations and time schedules, responding to and acting on audit recommendations, and submitting periodic reports to the Institute on recommendations and actions taken.

3. Consequences of Non-Resolution of Audit Issues

It is the general policy of the State Justice Institute not to make new grant awards to an applicant having an unresolved audit report involving Institute awards. Failure of the grantee organization to resolve audit questions may also result in the suspension of payments for active Institute grants to that organization.

K. Close-Out of Grants

1. Definition

Close-out is a process by which the Institute determines that all applicable administrative and financial actions and all required work of the grant have been completed by both the grantee and the Institute.

2. Grantee Close-Out Requirements

Within 90 days after the end of the date of the grant or any approved extension thereof (revised end date), the following documents must be submitted to the Institute by the grantee other than a recipient of a scholarship under section II.B.2.b.v. These reporting requirements apply at the conclusion of any non-scholarship grant, even when the project will receive renewal funding through a continuation or on-going support grant.

a. *Financial Status Report.* The final report of expenditures must have no unliquidated obligations and must indicate the exact balance of unobligated funds. Any unobligated/unexpended funds will be deobligated from the award by the Institute. Final payment requests for obligations incurred during the award period must be submitted to the Institute prior to the end of the 90-day close-out period. Grantees of a check-issued basis, who have drawn down funds in excess of their obligations/expenditures, must return any unused funds as soon as it is determined that the funds are not required. In no case should any unused funds remain with the grantee beyond the submission date of the final financial status report.

b. *Final Progress Report.* This report should describe the project activities during the final calendar quarter of the project and the close-out period, including to whom project products have been disseminated; provide a summary of activities during the entire project; specify whether all the objectives set forth in the approved application or an approved adjustment thereto have been met and, if any of the objectives have not been met, explain the reasons therefor; and discuss what, if anything, could have been done differently that might have enhanced the impact of the project or improved its operation.

3. Extension of Close-Out Period

Upon the written request of the grantee, the Institute may extend the close-out period to assure completion of the Grantee's close-out requirements. Requests for an extension must be submitted at least 14 days before the end of the close-out period and must explain why the extension is necessary and what steps will be taken to assure that all the grantee's responsibilities will be met by the end of the extension period.

XII. Grant Adjustments

All requests for program or budget adjustments requiring Institute approval must be submitted in a timely manner by the project director. All requests for changes from the approved application will be carefully reviewed for both consistency with this Guideline and the enhancement of grant goals and objectives.

A. Grant Adjustments Requiring Prior Written Approval

There are several types of grant adjustments which require the prior written approval of the Institute. Examples of these adjustments include:

1. Budget revisions among direct cost categories which, individually or in the aggregate, exceed or are expected to exceed five percent of the approved original budget or the most recently approved revised budget. For the purposes of this section, the Institute will view budget revisions cumulatively.

a. For package grants, reallocations among budget categories of an individual project within the package that total less than five percent of the approved budget for that project do not require a grant adjustment. However, transfers of funds between projects included in the package require prior written approval by the Institute.

b. For continuation and on-going support grants, funds from the original award may be used during the renewal grant period and funds awarded by a continuation or on-going support grant may be used to cover project-related expenditures incurred during the original award period, with the prior written approval of the Institute.

2. A change in the scope of work to be performed or the objectives of the project (see section XII.D.).

3. A change in the project site.

4. A change in the project period, such as an extension of the grant period and/or extension of the final financial or progress report deadline (see section XII.E.).

5. Satisfaction of special conditions, if required.

6. A change in or temporary absence of the project director (see sections XII.F. and G.).

7. The assignment of an employee or consultant to a key staff position whose qualifications were not described in the application, or a change of a person assigned to a key project staff position (see section X.X.).

8. A change in the name of the grantee organization.

9. A transfer or contracting out of grant-supported activities (see section XII.H.).

10. A transfer of the grant to another recipient.

11. Preagreement costs, the purchase of automated data processing equipment and software, and consultant rates, as specified in section XI.H.2.

12. A change in the nature or number of the products to be prepared or the manner in which a product would be distributed.

B. Request for Grant Adjustments

All grantees and subgrantees must promptly notify the SJI program managers, in writing, of events or proposed changes which may require an adjustment to the approved application. In requesting an adjustment, the grantee must set forth the reasons and basis for the proposed adjustment and any other information the SJI program managers determine would help the Institute's review.

C. Notification of Approval/Disapproval

If the request is approved, the grantee will be sent a Grant Adjustment signed by the Executive Director or his designee. If the request is denied, the grantee will be sent a written explanation of the reasons for the denial.

D. Changes in the Scope of the Grant

A grantee/subgrantee may make minor changes in methodology,

approach, or other aspects of the grant to expedite achievement of the grant's objectives with subsequent notification of the SJI program manager. Major changes in scope, duration, training methodology, or other significant areas must be approved in advance by the Institute.

E. Date Changes

A request to change or extend the grant period must be made at least 30 days in advance of the end date of the grant. A revised task plan should accompany requests for a no-cost extension of the grant period, along with a revised budget if shifts among budget categories will be needed. A request to change or extend the deadline for the final financial report or final progress report must be made at least 14 days in advance of the report deadline (see section XI.K.3.).

F. Temporary Absence of the Project Director

Whenever absence of the project director is expected to exceed a continuous period of one month, the plans for the conduct of the project director's duties during such absence must be approved in advance by the Institute. This information must be provided in a letter signed by an authorized representative of the grantee/subgrantee at least 30 days before the departure of the project director, or as soon as it is known that the project director will be absent. The grant may be terminated if arrangements are not approved in advance by the Institute.

G. Withdrawal of/Change in Project Director

If the project director relinquishes or expects to relinquish active direction of the project, the Institute must be notified immediately. In such cases, if the grantee/subgrantee wishes to terminate the project, the Institute will forward procedural instructions upon notification of such intent. If the grantee wishes to continue the project under the direction of another individual, a statement of the candidate's qualifications should be sent to the Institute for review and approval. The grant may be terminated if the qualifications of the proposed individual are not approved in advance by the Institute.

H. Transferring or Contracting Out of Grant-Supported Activities

A principal activity of the grant-supported project shall not be transferred or contracted out to another organization without specific prior approval by the Institute. All such arrangements should be formalized in a contract or other written agreement between the parties involved. Copies of the proposed contract or agreement must be submitted for prior approval at the earliest possible time. The contract or agreement must state, at a minimum, the activities to be performed, the time schedule, the policies and procedures to be followed, the dollar limitation of the agreement, and the cost principles to be followed in determining what costs, both direct and indirect, are to be allowed. The contract or other written agreement must not affect the grantee's overall responsibility for the direction of the project and accountability to the Institute.

State Justice Institute Board of Directors

John F. Daffron, Jr., Chairman, Judge, Twelfth Judicial Circuit, Chesterfield, Virginia
David A. Brock, Vice Chairman, Chief Justice, Supreme Court of New Hampshire, Concord, New Hampshire
Janice L. Gradwohl, Secretary, Judge (ret.), County Courts, Lincoln, Nebraska
Terrence B. Adamson, Esq., Executive Committee Member, Kaye, Scholer, Fierman, Hays, and Handler, Washington, DC
Joseph F. Baca, Chief Justice, Supreme Court of New Mexico, Albuquerque, New Mexico
Robert N. Baldwin, State Court Administrator, Supreme Court of Virginia, Richmond, Virginia
Carlos R. Garza, Administrative Judge (ret.), Vienna, Virginia
Keith McNamara, Esq., McNamara and McNamara, Columbus, Ohio
Florence Murray, Justice, Rhode Island Supreme Court, Providence, Rhode Island
Sandra A. O'Connor, State Attorney of Baltimore County, Towson, Maryland
Janie L. Shores, Justice, Supreme Court of Alabama, Montgomery, Alabama
David I. Tevelin, Executive Director (ex officio)

David I. Tevelin,

Executive Director.

Appendix I

List of State Contacts Regarding Administration of Institute Grants to State and Local Courts

Mr. Oliver Gilmore, Administrative Director, Administrative Office of the Courts, 817 South Court Street, Montgomery, Alabama 36130, (205) 834–7990
Mr. Arthur H. Snowden II, Administrative Director, Alaska Court System, 303 K Street, Anchorage, Alaska 99501, (907) 264–0547
Mr. David K. Byers, Administrative Director, Supreme Court of Arizona, 1501 West Washington Street, Suite 411, Phoenix, Arizona 85007–3330, (602) 542–9301
Mr. James D. Gingerich, Director, Administrative Office of the Courts, 625 Marshall, Little Rock, Arkansas 72201–1078, (501) 376–6655
Mr. William C. Vickrey, State Court Administrator, Administrative Office of the Courts, 303 Second Street, South Tower, San Francisco, California 94107, (415) 396–9100
Mr. Steven V. Berson, State Court Administrator, Colorado Judicial Department, 1301 Pennsylvania Street, Suite 300, Denver, Colorado 80203–2416, (303) 861–1111, ext. 585
Ms. Faith P. Arkin, Director, External Affairs, Office of the Chief Court Administrator, Drawer N, Station A, Hartford, Connecticut 06106, (203) 566–8210
Mr. Lowell Groundland, Director, Administrative Office of the Courts, Carvel State Office Building, 820 N. French Street, Wilmington, Delaware 19801, (302) 571–2480
Mr. Ulysses Hammond, Executive Officer, Courts of the District of Columbia, 500 Indiana Avenue, N.W., Washington, D.C. 20001, (202) 879–1700
Mr. Kenneth Palmer, State Courts Administrator, Florida State Courts System, Supreme Court Building, Tallahassee, Florida 32399–1900, (904) 922–5081
Mr. Robert L. Doss, Jr., Director, Administrative Office of the Georgia Courts, The Judicial Council of Georgia, 244 Washington Street, S.W., Suite 500, Atlanta, Georgia 30334–5900, (404) 656–5171
Mr. Perry C. Taitano, Administrative Director, Superior Court of Guam, Judiciary Building, 110 West O'Brien Drive, Agana, Guam 96920, 011 (671) 472–8961 through 8968
Sharon Miyoshiro, Administrative Director of the Courts, Office of the Administrative Director, Post Office Box 2560, Honolulu, Hawaii 96813, (808) 539–4900
Honorable Charles F. McDevitt, Chief Justice, Idaho Supreme Court, 451 West State Street, Boise, Idaho 83720, (208) 334–3464
Mr. Robert E. Davison, Director, Administrative Office of the Courts, 840 S. Spring Street, Springfield, Illinois 62704, (312) 793–3250
Mr. Bruce A. Kotzan, Executive Director, Supreme Court of Indiana, State House, Room 323, Indianapolis, Indiana 46204, (317) 232–2542
Mr. William J. O'Brien, State Court Administrator, Supreme Court of Iowa, State House, Des Moines, Iowa 50319, (515) 281–5241
Dr. Howard P. Schwartz, Judicial Administrator, Kansas Judicial Center, 301 West 10th Street, Topeka, Kansas 66612, (923) 296–4873
Ms. Laura Stammel, Assistant Director, Administrative Office of the Courts, 100 Mill Creek Park, Frankfort, Kentucky 40601, (502) 564–2350
Dr. Hugh M. Collins, Judicial Administrator, Supreme Court of Louisiana, 301 Loyola Avenue, Room 109, New Orleans, Louisiana 70112–1887, (504) 568–5747

Mr. James T. Glessner, State Court Administrator, Administrative Office of the Courts, P.O. Box 4820, Downtown Station, Portland, Maine 04112, (207) 822–0792

Ms. Deborah A. Unitus, Assistant State Court Administrator, Administrative Office of the Courts, Rowe Boulevard and Taylor Avenue, Annapolis, Maryland 21401, (301) 974–2141

Honorable John J. Irwin, Jr., Chief Justice for Administration and Management, The Trial Court, Administrative Office of the Trial Court, Two Center Plaza, Suite 540, Boston, Massachusetts 02108, (617) 742–8575

Ms. Marilyn K. Hall, State Court Administrator, Michigan Supreme Court, P.O. Box 30048, 611 West Ottawa Street, Lansing, Michigan 48909, (517) 373–0136

Ms. Sue K. Dosal, State Court Administrator, Supreme Court of Minnesota, 230 State Capitol, St. Paul, Minnesota 55155, (617) 296–2474

Honorable Leslie Johnson, Director, Center for Court Education and Continuing Studies, P.O. Box 879, Oxford, Mississippi 38677, (601) 232–5955

Mr. Ron Larkin, State Court Administrator, 1105 R Southwest Blvd., Jefferson City, Missouri 65109, (314) 751–3585

Mr. Patrick A. Chenovick, State Court Administrator, Montana Supreme Court, Justice Building, Room 315, 215 North Sanders, Helena, Montana 59620–3001, (406) 444–2621

Mr. Joseph C. Steele, State Court Administrator, Supreme Court of Nebraska, State Capitol Building, Room 1220, Lincoln, Nebraska 68509, (404) 471–2643

Mr. Donald J. Mello, Court Administrator, Administrative Office of the Courts, Capitol Complex, Carson City, Nevada 89710, (702) 885–5076

James A. Brickner, Acting State Court Administrator, Supreme Court of New Hampshire, Frank Rowe Kenison Building, Concord, New Hampshire 03301, (603) 271–2419

Mr. Robert Lipscher, Administrative Director, Administrative Office of the Courts, CN–037, RJH Justice Complex, Trenton, New Jersey 08625, (609) 984–0275

Honorable E. Leo Milonas, Chief Administrative Judge, Office of Court Administration, 270 Broadway, New York, New York 10007, (212) 587–2004

Ms. Deborah Kanter, State Court Administrator, Administrative Office of the Courts, Supreme Court of New Mexico, Supreme Court Building, Room 25, Santa Fe, New Mexico 87503, (505) 827–4800

Mr. James C. Drennan, Administrative Director, Administrative Office of the Courts, P.O. Box 2448, Raleigh, North Carolina 27602, (919) 733–7106/7107

Mr. Keithe E. Nelson, State Court Administrator, Supreme Court of North Dakota, State Capitol Building, Bismarck, North Dakota 58505, (701) 224–4216

Mr. Stephan W. Stover, Administrative Director of the Courts, Supreme Court of Ohio, State Office Tower, 30 East Broad Street, Columbus, Ohio 43266–0419, (614) 466–2653

Mr. Howard W. Conyers Administrative Director, Administrative Office of the Courts, 1925 N. Stiles, Suite 305, Oklahoma City, Oklahoma 73105, (405) 521–2450

Ms. Kingsley Click, Acting State Court Administrator, Supreme Court of Oregon, Supreme Court Building, Salem, Oregon 97310, (503) 986–5500

Mr. Thomas B. Darr, Director for Legislative Affairs, Communications and Administration, 5035 Ritter Road, Mechanicsburg, Pennsylvania 17055, (717) 795–2000

Dr. Robert C. Harrall, State Court Administrator, Supreme Court of Rhode Island, 250 Benefit Street, Providence, Rhode Island 02903, (401) 277–3266

Mr. Louis L. Rosen, Director, South Carolina Court Administration, P.O. Box 50447, Columbia, South Carolina 29250, (803) 734–1800

Honorable Robert A. Miller, Chief Justice, Supreme Court of South Dakota, 500 East Capitol Avenue, Pierre, South Dakota 57501, (605) 773–4885

Mr. Charles E. Ferrell, Executive Secretary, Supreme Court of Tennessee, Supreme Court Building, Room 422, Nashville, Tennessee 37219, (615) 741–2687

Administrative Director, Office of Court Administration of the Texas Judicial System, P.O. Box 12066, Austin, Texas 78711, (512) 463–1625

Mr. Ronald W. Gibson, State Court Administrator, Administrative Office of the Courts, 230 South 500 East, Salt Lake City, Utah 84102, (801) 533–6371

Mr. Thomas J. Lehner, Court Administrator, Supreme Court of Vermont, 111 State Street, Montpelier, Vermont 05602, (802) 828–3281

Ms. Viola E. Smith, Clerk of the Court/Administrator, Territorial Court of the Virgin Islands, P.O. Box 70, Charlotte Amalie, St. Thomas, Virgin Islands 00801, (809) 774–6680, ext. 248

Mr. Robert N. Baldwin, Executive Secretary, Supreme Court of Virginia, Administrative Offices, 100 North Ninth Street, 3rd Floor, Richmond, Virginia 23219, (804) 786–6455

Ms. Mary C. McQueen, Administrator for the Courts, Supreme Court of Washington, Highways-Licensing Building, 6th Floor, 12th & Washington, Olympia, Washington 98504, (206) 753–5780

Mr. Ted J. Philyaw, Administrative Director of the Courts, Administrative Office, 402–E State Capitol, Charleston, West Virginia 25305, (304) 348–0145

Mr. J. Denis Moran, Director of State Courts, P.O. Box 1688, Madison, Wisconsin 53701–1688, (608) 266–6828

Mr. Robert L. Duncan, Court Coordinator, Supreme Court Building, Cheyenne, Wyoming 82002, (307) 777–7581

Appendix II

SJI Libraries, Designated Sites and Contacts (August 1995)

State: Alabama.
Location: Supreme Court Library.
Contact: Mr. William C. Younger, State Law Librarian, Alabama Supreme Court Bldg., 445 Dexter Avenue, Montgomery, Alabama 36130, (205) 242–4347.

State: Alaska.
Location: Anchorage Law Library.
Contact: Ms. Cynthia S. Petumenos, State Law Librarian, Alaska Court Libraries, 303 K Street, Anchorage, Alaska 99501, (907) 264–0583.

State: Arizona.
Location: State Law Library.
Contact: Ms. Sharon Womack, Director, Department of Library & Archives, State Capitol, 1700 West Washington, Phoenix, Arizona 85007, (602) 542–4035.

State: Arkansas.
Location: Administrative Office of the Courts.
Contact: Mr. James D. Gingerich, Director, Supreme Court of Arkansas, Administrative Office of the Courts, Justice Building, 625 Marshall, Little Rock, Arkansas 72201–1078, (501) 376–6655.

State: California.
Location: Administrative Office of the Courts.
Contact: Mr. William C. Vickrey, State Court Administrator, Administrative Office of the Courts, 303 Second Street, South Tower, San Francisco, California 94107, (415) 396–9100.

State: Colorado.
Location: Supreme Court Library.
Contact: Ms. Frances Campbell, Supreme Court Law Librarian, Colorado State Judicial Building, 2 East 14th Avenue, Denver, Colorado 80203, (303) 837–3720.

State: Connecticut.
Location: State Library.
Contact: Mr. Richard Akeroyd, State Librarian, 231 Capital Avenue, Hartford, Connecticut 06106, (203) 566–4301.

State: Delaware.
Location: Administrative Office of the Courts.
Contact: Mr. Michael E. McLaughlin, Deputy Director, Administrative Office of the Courts, Carvel State Office Building, 820 North French Street, 11th Floor, P.O. Box 8911, Wilmington, Delaware 19801, (302) 571–2480.

State: District of Columbia.
Location: Executive Office, District of Columbia Courts.
Contact: Mr. Ulysses Hammond, Executive Officer, Courts of the District of Columbia, 500 Indiana Avenue, N.W., Washington, D.C. 20001, (202) 879–1700.

State: Florida.
Location: Administrative Office of the Courts.
Contact: Mr. Kenneth Palmer, State Court Administrator, Florida State Courts System, Supreme Court Building, Tallahassee, Florida 32399–1900, (904) 488–8621.

State: Georgia.
Location: Administrative Office of the Courts.
Contact: Mr. Robert L. Doss, Jr., Director, Administrative Office of the Courts, The Judicial Council of Georgia, 244 Washington Street, S.W., Suite 550, Atlanta, Georgia 30334, (404) 656–5171.

State: Hawaii.
Location: Supreme Court Library.
Contact: Ms. Ann Koto, Acting Law Librarian, Supreme Court Law Library, P.O. Box 2560, Honolulu, Hawaii 96804, (808) 548–4605.

State: Idaho.
Location: AOC Judicial Education Library/State
Law Library in Boise.

Contact: Ms. Laura Pershing, State Law Librarian, Idaho State Law Library, Supreme Court Building, 451 West State Street, Boise, Idaho 83720, (208) 334–3316.

State: Illinois.
Location: Supreme Court Library.

Contact: Ms. Brenda I. Larison, Supreme Court Library, Supreme Court Building, Springfield, Illinois 62701–1791, (217) 782–2424.

State: Indiana.
Location: Supreme Court Library.
Contact: Ms. Constance Matts, Supreme Court Librarian, Supreme Court Library, State House, Indianapolis, Indiana 46204, State House, Indianapolis, Indiana 46204, (317) 232–2557.

State: Iowa.
Location: Administrative Office of the Court.
Contact: Mr. Jerry K. Beatty, Executive Director, Judicial Education and Planning, Administrative Office of the Courts, State Capital Building, Des Moines, Iowa 50319, (515) 281–8279.

State: Kansas.
Location: Supreme Court Library.
Contact: Mr. Fred Knecht, Law Librarian, Kansas Supreme Court Library, 301 West 10th Street, Topeka, Kansas 66613, (913) 296–3257.

State: Kentucky.
Location: State Law Library.
Contact: Ms. Sallie Howard, State Law Librarian, State Law Library, State Capital, Room 200–A, Frankfort, Kentucky 40601, (502) 564–4848.

State: Louisiana.
Location: State Law Library.
Contact: Ms. Carol Billings, Director, Louisiana Law Library, 301 Loyola Avenue, New Orleans, Louisiana 70112, (504) 568–5705.

State: Maine.
Location: State Law and Legislative Reference Library.
Contact: Ms. Lynn E. Randall, State Law Librarian, State House Station 43, Augusta, Maine 04333, (207) 289–1600.

State: Maryland.
Location: State Law Library.
Contact: Mr. Michael S. Miller, Director, Maryland State Law Library, Court of Appeal Building, 361 Rowe Boulevard, Annapolis, Maryland 21401, (301) 974–3395.

State: Massachusetts.
Location: Middlesex Law Library.
Contact: Ms. Sandra Lindheimer, Librarian, Middlesex Law Library, Superior Court House, 40 Thorndike Street, Cambridge, Massachusetts 02141, (617) 494–4148.

State: Michigan.
Location: Michigan Judicial Institute.
Contact: Mr. Dennis W. Catlin, Executive Director, Michigan Judicial Institute, 222 Washington Square North, P.O. Box 30205, Lansing, Michigan 48909, (517) 334–7804.

State: Minnesota.
Location: State Law Library (Minnesota Judicial Center).

Contact: Mr. Marvin R. Anderson, State Law Librarian, Supreme Court of Minnesota, 25 Constitution Avenue, St. Paul, Minnesota 55155, (612) 297–2084.

State: Mississippi.
Location: Mississippi Judicial College.
Contact: Mr. Rick D. Patt, Staff Attorney, Mississippi Judicial College, 6th Floor, 3825 Ridgewood, Jackson, Mississippi 39211, (601) 982–6590.

State: Montana.
Location: State Law Library.
Contact: Ms. Judith Meadows, State Law Librarian, State Law Library of Montana, Justice Building, 215 North Sanders, Helena, Montana 59620, (406) 444–3660.

State: Nebraska.
Location: Administrative Office of the Courts.
Contact: Mr. Joseph C. Steele, State Court Administrator, Supreme Court of Nebraska, Administrative Office of the Courts, P.O. Box 98910, Lincoln, Nebraska 68509–8910, (402) 471–3730.

State: Nevada.
Location: National Judicial College.
Contact: Dean V. Robert Paymat, National Judicial College, Judicial College Building, University of Nevada, Reno, Nevada 89550, (702) 784–6747.

State: New Jersey.
Location: New Jersey State Library.
Contact: Mr. Robert L. Bland, Law Coordinator, State of New Jersey, Department of Education, State Library, 185 West State Street, CN520, Trenton, New Jersey 08625, (609) 292–6230.

State: New Mexico.
Location: Supreme Court Library.
Contact: Mr. Thaddeus Bejnar, Librarian, Supreme Court Library, Post Office Drawer L, Santa Fe, New Mexico 87504, (505) 827–4850.

State: New York.
Location: Supreme Court Library.
Contact: Ms. Susan M. Wood, Esq., Principal Law Librarian, New York State Supreme Court Law Library, Onondaga County Court House, Syracuse, New York 13202, (315) 435–2063.

State: North Carolina.
Location: Supreme Court Library.
Contact: Ms. Louise Stafford, Librarian, North Carolina Supreme Court Library, P.O. Box 28006 (by courier) 500 Justice Building, 2 East Morgan Street, Raleigh, North Carolina 27601, (919) 733–3425.

State: North Dakota.
Location: Supreme Court Library.
Contact: Ms. Marcella Kramer, Assistant Law Librarian, Supreme Court Law Library, 600 East Boulevard Avenue, 2nd Floor, Judicial Wing, Bismarck, North Dakota 58505–0530, (701) 224–2229.

State: Northern Mariana Islands.
Location: Supreme Court of the Northern Mariana Islands.
Contact: Honorable Jose S. Dela Cruz, Chief Justice, Supreme Court of the Northern Mariana Islands, P.O. Box 2165, Saipan, MP 96950, (607) 234–5275.

State: Ohio.
Location: Supreme Court Library.

Contact: Mr. Paul S. Fu, Law Librarian, Supreme Court Law Library, Supreme Court of Ohio, 30 East Broad Street, Columbus, Ohio 43266–0419, (614) 466–2044.

State: Oklahoma.
Location: Administrative Office of the Courts.
Contact: Mr. Howard W. Conyers, Director, Administrative Office of the Courts, 1915 North Stiles, Suite 305, Oklahoma City, Oklahoma 73105, (405) 521–2450.

State: Oregon.
Location: Administrative Office of the Courts.
Contact: Mr. R. William Linden, Jr., State Court Administrator, Supreme Court of Oregon, Supreme Court Building, Salem, Oregon 97310, (503) 378–6046.

State: Pennsylvania.
Location: State Library of Pennsylvania.
Contact: Ms. Betty Lutz, Head, Acquisitions Section, State Library of Pennsylvania, Technical Services, G46 Forum Building, Harrisburg, Pennsylvania 17105, (717) 787–4440.

State: Puerto Rico.
Location: Office of Court Administration.
Contact: Mr. Alfredo Rivera-Mendoza, Esq., Director, Area of Planning and Management, Office of Court Administration, P.O. Box 917, Hato Rey, Puerto Rico 00919.

State: Rhode Island.
Location: State Law Library.
Contact: Mr. Kendall F. Svengalis, Law Librarian, Licht Judicial Complex, 250 Benefit Street, Providence, Rhode Island 02903, (401) 277–3275.

State: South Carolina.
Location: Coleman Karesh Law Library (University of South Carolina School of Law).
Contact: Mr. Bruce S. Johnson, Law Librarian, Associate Professor of Law, Coleman Karesh Law Library, U.S.C. Law Center, University of South Carolina, Columbia, South Carolina 29208, (803) 777–5944.

State: Tennessee.
Location: Tennessee State Law Library.
Contact: Ms. Donna C. Wair, Librarian, Tennessee State Law Library, Supreme Court Building, 401 Seventh Avenue N, Nashville, Tennessee 37243–0609, (615) 741–2016.

State: Texas.
Location: State Law Library.
Contact: Ms. Kay Schleuter, Director, State Law Library, P.O. Box 12367, Austin, Texas 78711, (512) 463–1722.

State: U.S. Virgin Islands.
Location: Library of the Territorial Court of the Virgin Islands (St. Thomas).
Contact: Librarian, The Library, Territorial Court of the Virgin Islands, Post Office Box 70, Charlotte Amalie, St. Thomas, U.S. Virgin Islands 00804.

State: Utah.
Location: Utah State Judicial Administration Library.
Contact: Ms. Jennifer Bullock, Librarian, Utah State Judicial Administration Library, 230 South 500 East, Suite 300, Salt Lake City, Utah 84102, (801) 533–6371.

State: Vermont.
Location: Supreme Court of Vermont.

Contact: Mr. Thomas J. Lehner, Court Administrator, Supreme Court of Vermont, 111 State Street, c/o Pavilion Office Building, Montpelier, Vermont 05602, (802) 828–3278.

State: Virginia.
Location: Administrative Office of the Courts.
Contact: Mr. Robert N. Baldwin, Executive Secretary, Supreme Court of Virginia, Administrative Offices, 100 North Ninth Street, Third Floor, Richmond, Virginia 23219, (804) 786–6455.

State: .Washington.
Location: Washington State Law Library.
Contact: Ms. Deborah Norwood, State Law Librarian, Washington State Law Library, Temple of Justice, Mail Stop AV–02, Olympia, Washington 98504–0502, (206) 357–2146.

State: West Virginia.
Location: Administrative Office of the Courts.
Contact: Mr. Richard H. Rosswurm, Deputy Administrative Director for Judicial Education, West Virginia Supreme Court of Appeals, State Capitol, Capitol E–400, Charleston, West Virginia 25305, (304) 348–0145.

State: Wisconsin.
Location: State Law Library.
Contact: Ms. Marcia Koslov, State Law Librarian, State Law Library, 310 E State Capitol, P.O. Box 7881, Madison, Wisconsin 53707, (608) 266–1424.

State: Wyoming.
Location: Wyoming State Law Library.
Contact: Ms. Kathy Carlson, Law Librarian, Wyoming State Law Library, Supreme Court Building, Cheyenne, Wyoming 82002, (307) 777–7509.

National: American Judicature Society.
Contact: Ms. Clara Wells, Assistant for Information and Library Services, 25 East Washington Street, Suite 1600, Chicago, Illinois 60602, (312) 558–6900.

National: National Center for State Courts.
Contact: Ms. Peggy Rogers, Acquisitions/Serials Librarian, 300 Newport Avenue, Williamsburg, Virginia 23187–8798, (804) 253–2000.

National: Michigan State University.
Contact: Dr. John K. Hudzik, Project Director, Judicial Education, Reference, Information and Technical Transfer Project (JERITT), Michigan State University, 560 Baker Hall, East Lansing, Michigan 48824, (517) 353–8603.

(Form S1)

Appendix III

State Justice Institute—Scholarship Application

This application does not serve as a registration for the course. Please contact the education provider.

Applicant Information

1. Applicant Name: _____
(Last) (First) (M)
2. Position: _____
3. Name of Court: _____
4. Address: _____
Street/P.O. Box
_____
City State Zip Code
Street/P.O. Box
_____
City State Zip Code
5. Telephone No. _____
6. Congressional District: _____

Program Information

7. Course Name: _____
8. Course Dates: _____
9. Course Provider: _____
10. Location Offered: _____

Estimated Expenses

(Please note, scholarships are limited to tuition and transportation expenses to and from the site of the course up to a maximum of $1,500.)

Tuition: $ _____

Amount Requested: $ _____

Transportation: $ _____

(Airfare, trainfare, or if you plan to drive, an amount equal to the approximate distance and mileage rate.)

Additional Information

Please attach a current resume or professional summary, and answer the following questions. (You may attach additional pages if necessary.)

1. How will taking this course benefit you, your court, and the State's courts generally?
2. Is there any education or training currently available through your State on this topic?
3. How will you apply what you have learned? Please include any plans you may have to develop/teach a course on this topic in your jurisdiction/State, provide in-service training, or otherwise disseminate what you have learned to colleagues.
4. Are State or local funds available to support your attendance at the proposed course? If so, what amount(s) will be provided?
5. How long have you served as a judge or court manager?
6. How long do you anticipate serving as a judge or court manager, assuming reelection or reappointment?
7. How long has it been since you attended a non-mandatory continuing professional education program?

Statement of Applicant's Commitment

If a scholarship is awarded, I will submit an evaluation of the educational program to the State Justice Institute and to the Chief Justice of my State.

_____
Signature

_____
Date

Please return this form and Form S–2 to: State Justice Institute, 1650 King Street, Suite 600, Alexandria, Virginia 22314.

(Form S2)

State Justice Institute—Scholarship Application—Concurrence

I, _____
Name of Chief Justice (or Chief Justice's Designee)

have reviewed the application for a scholarship to attend the program entitled

_____

prepared by, _____
Name of Applicant

and concur in its submission to the State Justice Institute. The applicant's participation in the program would benefit the State; the applicant's absence to attend the program would not present an undue hardship to the court; and receipt of a scholarship would not diminish the amount of funds made available by the State for judicial education.

_____
Signature

_____
Name

_____
Title

_____
Date

Form E

Appendix IV

State Justice Institute—Project Budget

Category	SJI funds	Cash match	In-kind match
Personnel	$	$	$
Fringe Benefits	$	$	$
Consultant/Contractual	$	$	$
Travel	$	$	$
Equipment	$	$	$
Supplies	$	$	$
Telephone	$	$	$
Postage	$	$	$
Printing/Photocopying	$	$	$
Audit	$	$	$
Other	$	$	$

Category	SJI funds	Cash match	In-kind match
Indirect Costs (%)	$	$	$
Total	$	$	$
Project Total	$		

Financial assistance has been or will be sought for this project from the following other sources:

_____

_____

* Concept papers requesting an accelerated award, Curriculum Adaptation grant requests, and Technical Assistance grant requests should be accompanied by a budget narrative explaining the basis for each line-item listed in the proposed budget.

Form B (Instructions on Reverse Side)

Appendix V

State Justice Institute—Certificate of State Approval

The _____
Name of State Supreme Court or Designated Agency or Council

has reviewed the application entitled _____

_____

Prepared by _____
Name of Applicant

approves its submission to the State Justice Institute, and

[ ] agrees to receive and administer and be accountable for all funds awarded by the Institute pursuant to the application.

[ ] designates _____
Name of Trial or Appellate Court or Agency

as the entity to receive, administer, and be accountable for all funds awarded by the Institute pursuant to the application.

_____
Signature

_____
Name

_____
Title

_____
Date

Instructions—Form B

The State Justice Institute Act requires that:

Each application for funding by a State or local court shall be approved, consistent with State law, by the State's Supreme Court, or its designated agency or council, which shall receive, administer, and be accountable for all funds awarded by the Institute to such courts. 42 U.S.C. 10705(b)(4).

Form B should be signed by the Chief Judge or Chief Justice of the State Supreme Court, or by the director of the designated or chair of the designated council. If the designated agency or council differs from the designee listed in Appendix I to the State Justice Institute Grant Guideline, evidence of the new or additional designation should be attached.

The term ''State Supreme Court'' refers to the court of last resort of a State. ''Designated agency or council'' refers to the office or judicial body which is authorized under State law or by delegation from the State Supreme Court to approve applications for funds and to receive, administer and be accountable for those funds.

Appendix VI—Illustrative List of Model Curricula

The following list includes examples of curricula that have been developed with support from SJI, and that might be—or in some cases have been—successfully adapted for State-based education programs for judges and other court personnel. A list of all SJI-supported education projects is available from the Institute. Please also check with the JERITT project (517/353-8603) and with your State SJI-designated library (see Appendix II) for information on other curricula that may be appropriate for your State's needs.

''Manual for Judicial Writing Workshop for Trial Judges'' (University of Georgia/Colorado Judicial Department: SJI–87–018/019)

''Judicial Education Curriculum: Teaching Guides on Court Security, and Jury Management and Impanelment'' (Institute for Court Management/National Center for State Courts: SJI–88–053)

''Caseflow Management Principles and Practices'' (Institute for Court Management/National Center for State Courts: SJI–87–056)

''Adjudication of Farm Credit Issues'' (Rural Justice Center: SJI–87–059)

''A National Program for Reporting on the Courts and the Law'' (American Judicature Society: SJI–88–014)

''Model Judicial Mediation Training Program'' (American Arbitration Association: SJI–88–078)

''Domestic Violence: A Curriculum for Rural Courts'' from ''A Project to Improve Access to Rural Courts for Victims of Domestic Violence'' (Rural Justice Center: SJI–88–081)

''Career Writing Program for Appellate Judges'' (American Academy of Judicial Education: SJI–88–086–P92–1)

''Judges Media Relations Seminar'' from ''A Statewide Program for Improving Media and Judicial Relations'' (Minnesota Supreme Court: SJI–89–024)

''Minding the Courts into the Twentieth Century'' (Michigan Judicial Institute: SJI–89–029)

''Innovative Juvenile and Family Court Training'' (Youth Law Center: SJI–87–060, SJI–89–039)

''Troubled Families, Troubled Judges'' (Brandeis University: SJI–89–071)

''Judicial Settlement Manual'' from ''Judicial Settlement: Development of a New Course Module, Film, and Instructional Manual'' (National Judicial College: SJI–89–089)

''Judicial Training Materials on Spousal Support''; ''Family Violence: Effective Judicial Intervention''; ''Judicial Training Materials on Child Custody and Visitation'' from ''Enhancing Gender Fairness in the State Courts'' (Women Judges' Fund for Justice: SJI–89–062)

''Introduction to the Jurisprudence of Victims' Rights'' from ''Victim Rights and the Judiciary: A Training and Implementation Project'' (National Organization for Victim Assistance: SJI–89–083)

''Fundamental Skills Training Curriculum for Juvenile Probation Officers'' (National Council of Juvenile and Family Court Judges: SJI–90–017)

''Pre-Bench Training for New Judges'' (American Judicature Society: SJI–90–028)

''A Manual for Workshops on Processing Felony Dispositions in Limited Jurisdiction Courts'' (National Center for State Courts: SJI–90–052)

''The Crucial Nature of Attitudes and Values in Judicial Education'' (National Council of Juvenile and Family Court Judges: SJI–90–058)

''Policy Alternatives and Current Court Practices in the Special Problem Areas of Jurisdiction Over the Family'' from ''Juvenile and Family Court Key Issues Curriculum Enhancement Project'' (National Council of Juvenile and Family Court Judges: SJI–90–066)

''Gender Fairness Faculty Development Workshops'' (National Judicial College: SJI–90–077)

''A Unified Orientation and Mentoring Program for New Judges of All Arizona Trial Courts'' (Arizona Supreme Court: SJI–90–078)

''National Guardianship Monitoring Program'' from ''AARP Volunteers: A Resource for State Guardianship Services'' (Association for the Advancement of Retired Persons: SJI–91–013)

''Medicine, Ethics, and the Law: Preconception to Birth'' (Women Judges Fund for Justice: SJI–89–062, SJI–91–019)

''The Leadership Institute in Judicial Education'' and ''The Advanced Leadership Institute in Judicial Education'' (Appalachian State University: SJI–91–021)

''Managing Trials Effectively: A Program for State Trial Judges'' (National Center for State Courts/National Judicial College: SJI–87–066/067, SJI–89–054/055, SJI–91–025/026)

''Faculty Development Instructional Program'' from ''Curriculum Review'' (National Judicial College: SJI–91–039)

''Legal Institute for Special and Limited Jurisdiction Judges'' (National Judicial College: SJI–89–043, SJI–91–040)

''Managerial Budgeting in the Courts''; ''Performance Appraisal in the Courts'';

''Managing Change in the Courts''; all three from ''Broadening Educational Opportunities for Judges and Other Key Court Personnel'' (Institute for Court Management/National Center for State Courts: SJI–91–043)

''An Approach to Long-Range Strategic Planning in the Courts'' (Center for Public Policy Studies: SJI–91–045)

''Implementing the Court-Related Needs of Older People and Persons with Disabilities: An Instructional Guide'' (National Judicial College: SJI–91–054)

''National Judicial Response to Domestic Violence: Civil and Criminal Curricula'' (Family Violence Prevention Fund: SJI–87–061, SJI–89–070, SJI–91–055)

''Access to Justice: The Impartial Jury and the Justice System'' and ''When Justice is Up to You'' from ''Pre-Juror Education Project'' (Consortium of Universities of the Washington Metropolitan Area: SJI–91–071)

''Judicial Review of Administrative Agency Decisions'' National Judicial College: SJI–91–080)

''Strengthening Rural Courts of Limited Jurisdiction'' and ''Team Training for Judges and Clerks'' from ''Rural Limited Jurisdiction Court Curriculum Project (Rural Justice Center: SJI–90–014, SJI–91–082)

''Medical/Legal Issues in Juvenile and Family Courts'' (National Council for Juvenile and Family Court Judges: SJI–91–091)

''Good Times, Bad Times: Drugs, Youth, and the Judiciary'' (Professional Development and Training Center, Inc.: SJI–91–095)

''Judicial Response to Stranger and Nonstranger Rape and Sexual Assault'' (National Judicial Education Program to Promote Equality for Women and Men: SJI–92–003)

''Interbranch Relations Workshop'' (Ohio Judicial Conference: SJI–92–079)

''Legal Institute for Non-Law Trained Judges'' (Arizona Supreme Court: SJI–92–146)

''New Employee Orientation Facilitators Guide'' from ''The Minnesota Comprehensive Curriculum Design and Training Program for Court Personnel'' (Minnesota Supreme Court: SJI–92–155)

''Magistrates Correspondence Course'' (Alaska Court System: SJI–92–156)

''Southwestern Judges' Conference on Environmental Law'' (University of New Mexico: SJI–92–162)

''Cultural Diversity Awareness in Nebraska Courts'' from ''Native American Alternatives to Incarceration Project'' (Nebraska Urban Indian Health Coalition: SJI–93–028)

''A Videotape Training Program in Ethics and Professional Conduct for Nonjudicial Court Personnel'' (American Judicature Society: SJI–93–068)

''Integrating Trial Management and Caseflow Management'' (Justice Management Institute: SJI–93–214)

''Civil and Criminal Procedural Innovations for Appellat Courts'' (National Center for State Courts: SJI–94–002)

''Comprehensive ADR Curriculum for Judges'' (American Bar Association SJI–95–002)

[FR Doc. 95–21242 Filed 8–28–95; 8:45 am]

BILLING CODE 6820–SC–P–M

federal register

Tuesday
August 29, 1995

Part III

Office of Management and Budget

5 CFR Part 1320

Reporting and Recordkeeping Requirements: Final Rule

OFFICE OF MANAGEMENT AND BUDGET

5 CFR Part 1320

Controlling Paperwork Burdens on the Public; Regulatory Changes Reflecting Recodification of the Paperwork Reduction Act

AGENCY: Office of Management and Budget, Executive Office of the President.

ACTION: Final rule.

SUMMARY: This rule implements the Paperwork Reduction Act of 1995. The Act changes existing law in several significant ways. It makes more explicit the responsibilities of agencies in developing proposed collections of information and submitting them for OMB review and approval. Among other things it requires agencies to seek public comment concerning proposed collections of information through 60-day notice to the public before submission for clearance by the Office of Management and Budget (OMB) and thereafter to certify to OMB that the proposed collection reduces to the extent practicable and appropriate the burden on respondents for small business, local government, and other small entities, and indicates for each recordkeeping requirement the length of time persons are required to maintain the records specified. The Act also redefines ''collection of information'' explicitly to include third-party and public disclosures, and changes a number of definitions and other provisions. This final rule amends OMB's existing paperwork clearance rules to reflect these and other legislative changes made by the Paperwork Reduction Act of 1995.

EFFECTIVE DATE: October 1, 1995.

FOR FURTHER INFORMATION CONTACT: Mr. Jefferson B. Hill, Office of Information and Regulatory Affairs, OMB, Washington, D.C. 20503 (202/395–7340). Inquiries may be submitted via facsimile to 202/395–7285. Electronic mail inquiries may be submitted via SMTP to Hill—J@a1.eop.gov or via X.400 to G=Jefferson, S=Hill, PRMD=gov+eop, ADMD+telemail, C=us. Inquiries submitted via electronic mail should include the commenter's name, affiliation, postal address, telephone number, and e-mail address in the text of the message.

SUPPLEMENTARY INFORMATION:

A. Background

The Office of Management and Budget (OMB) last issued 5 CFR Part 1320—Controlling Paperwork Burden on the Public—on May 10, 1988 [53 FR 16618]. The 1988 rule implemented the provisions of the Paperwork Reduction Act of 1980 (Pub. L. 96–511, 44 U.S.C. Chapter 35), as amended by the Paperwork Reduction Reauthorization Act of 1986 (Pub. L. 99–500 (October 18, 1986) and 99–591 (October 30, 1986), section 101(m)). The rationale supporting the 1988 rule is set forth at 53 FR 16618 (May 10, 1988), 52 FR 27768 (July 23, 1987), 48 FR 13666 (March 31, 1983), and 47 FR 39515 (September 8, 1982).

The Paperwork Reduction Act of 1995 (Pub. L. 104–13 (May 22, 1995)) replaced the Paperwork Reduction Act of 1980, as amended in 1986. The Paperwork Reduction Act of 1995 takes effect on October 1, 1995. The procedural requirements of the Paperwork Reduction Act of 1980, as amended in 1986, continue to apply to collections of information approved by OMB on or before September 30, 1995, and which have a valid OMB control number expiring after that date.

As a result of this legislative recodification of the Paperwork Reduction Act, OMB published proposed changes to 5 CFR Part 1320 in a Notice of Proposed Rulemaking (NPRM) on June 8, 1995 [60 FR 30438]. The NPRM changed the order and structure of the 1988 rule in order to clarify agency and OMB responsibilities, and to elaborate upon the various requirements of the Paperwork Reduction Act of 1995. The scope of these proposed changes, their legislative basis, and their relation to the 1988 rule are described in the NPRM.

In response to the NPRM, OMB received 50 comments. Each comment has been considered in preparing this final rule. In developing this recodification of 5 CFR Part 1320, OMB has also relied upon its 14 years of practical experience in administering the Paperwork Reduction Act of 1980 and upon its 12 years of implementing 5 CFR Part 1320.

Some of the comments received were of an administrative nature—that is, comments from agency staff requesting further elaboration or explanation of how the paperwork clearance process will work administratively. OMB staff have met with and are continuing to meet with agency staff in order to answer this type of question. OMB also notes that, in January 1989, the Office of Information and Regulatory Affairs (OIRA) in OMB issued an Information Collection Review Handbook, which was designed to offer detailed guidance to agency staff and the public on OMB's paperwork clearance process. It is OMB's intention to review and update that Handbook in light of the Paperwork Reduction Act of 1995 and these implementing regulations, and—in that document—provide more detailed elaboration and explanation.

Significant comments received in response to the NPRM, and any significant changes are discussed below.

B. Legislative Intent

In issuing this final rule, OMB is fully cognizant of the legislative intent of the draftsmen of the Paperwork Reduction Act of 1995: ''To the extent the revision is a restatement of the Paperwork Reduction Act of 1980, as amended in 1986, the legislation is a reaffirmation of the law's scope, underlying purposes, requirements, and legislative history. It is the intent of the [Senate] Committee that the Act's prior legislative history remain unchanged and continue to be viewed [as] an important explanation of the Congressional intent underpinning the Act's provisions'' (S. Rpt. 104–8, p. 35; see H. Rpt. 104–37, p. 35; H. Rpt. 104–99, pp. 27–28).

C. Significant Comments or Changes

1. Proposed § 1320.1 (''Purpose''): A comment suggested that the last sentence of the statement of purpose more closely track the text of 44 U.S.C. 3501(1) and (2). The final rule is modified accordingly.

2. Proposed § 1320.3(c)(1) (Definition of ''collection of information''): Several comments questioned the need for the provision in proposed § 1320.3(c)(1) to the effect that a collection of information may include ''any other techniques or technological methods used to monitor compliance with agency requirements''.

This provision was added in recognition that Federal agencies now collect, and in the future will increasingly collect information by having respondents use a wide variety of automated, electronic, mechanical, and other technological means—as well as the more traditional paper forms and interviews—to demonstrate compliance with agency requirements. Congress was fully aware of the increased respondent use of technology to collect, process, and disclose information to an agency or the public. In the Paperwork Reduction Act, a ''collection of information'' is defined to mean ''the obtaining * * * or requiring the disclosure to third parties or the public'' of facts or opinions, ''regardless of form or format'' (44 U.S.C. 3502(3)(A)). The Congressional Committees explained that ''the phrase 'regardless of form or format' * * * clarifies that regardless of the instrument, media, or method of agency action, a collection of information is any

agency action that calls for * * * identical reporting or recordkeeping requirements, or third party information disclosure requirements. * * * It also includes information collection activities regardless of whether the collection is formulated or communicated in written, oral, electronic or other form'' (H. Rpt. 104–37, p. 36; see S. Rpt. 104–8, p. 37). This same awareness is reflected in the definition of ''burden'' in the 1995 Act, which expressly includes the burden of ''acquiring, installing, and utilizing technology and systems'' (44 U.S.C. 3502(2)(B)). The Committees stated their intent to have the definition of burden include ''the resources expended for * * * acquiring, installing, and utilizing technology to gather, obtain, compile, or report'' information (H. Rpt. 104–37; see S. Rpt. 104–8, p. 35).

The final rule, in § 1320.3(c)(1), is modified to make it clear that, unless exempted, all agency collections of information are subject to OMB review and approval under the Paperwork Reduction Act, regardless of form or format, and regardless of whether the collections are implemented through paper, voice, automation, electronics, or other technological, scientific, or mechanical collection techniques.

3. Proposed § 1320.3(c)(3) (Definition of ''collection of information''): Proposed § 1320.3(c)(3) provided that a ''collection of information'' includes questions posed to agencies, instrumentalities, or employees of the United States, if the results are to be used for ''general statistical purposes.'' Several comments suggested that it would be useful to define ''general statistical purposes,'' consistent with historical practice.

The legislative history of the 1980 Act is helpful. ''As used in the definition [of collection of information], 'general statistical purposes' is intended to have precisely the same meaning as 'statistical compilations of general public interest' as the phrase appears in the original [Federal] Reports Act'' (See S. Rpt. 96–930, pp. 38–39).

Accordingly, in the final rule, a defining clause consistent with this legislative history has been added to § 1320.3(c)(3). The clarification is intended to distinguish between statistics collected for publication for the general public (such as studies of the Federal workforce made by the Office of Personnel Management) and internal statistics (information solicited from employees to support management purposes such as improving customer service or conducting internal audits of agency performance).

4. Proposed § 1320.3(f)(3) (Definition of ''display'') and proposed § 1320.5(b)(2)(ii)(C): The proposed rule in § 1320.3(f)(3) stated that, in the case of collections of information published in regulations in the **Federal Register**, an agency may ''display'' the OMB control number by publishing it in the preamble or the regulatory text for the final rule, in a technical amendment to the final rule, in a separate notice announcing OMB approval of the collection of information, and/or in the Code of Federal Regulations. The proposed rule also recommended that, for ease of reference, the agency also publish the control number in the Code of Federal Regulations, even when the agency has already ''displayed'' the control number by publishing it in the **Federal Register**. The proposed rule contained a similar provision at § 1320.5(b)(2)(ii)(C) regarding the requirement to inform potential respondents that they are not required to respond to the collection of information unless it displays a valid control number.

A comment stressed that the Code of Federal Regulations does not function independently of the **Federal Register**. Specifically, the comment pointed out that materials that are in the preamble for a final rule, or in a general notice in the **Federal Register**, will not be codified in the Code of Federal Regulations. For this reason, the comment expressed concern that the proposed rule's language might wrongly suggest that materials which are published in a preamble or in a notice indicating OMB approval would be codified in the Code of Federal Regulations.

The comment's point is well taken. To avoid any ambiguity or confusion on this matter, § 1320.3(f)(3) and § 1320.5(b)(2)(ii)(C) are revised in the final rule, and additional background explanation is included in this preamble.

With respect to § 1320.3(f)(3), this provision has been revised to make clear that, for purposes of the Act, an agency satisfies the requirement to ''display'' the OMB control number if the control number is published in the **Federal Register** or, alternatively, if the control number is published in the Code of Federal Regulations. Either form of publication satisfies the requirement to ''display'' the control number. Both are not required. A similar revision has been made to § 1320.5(b)(2)(ii)(C).

As additional background explanation, consider the application of § 1320.3(f)(3). If the agency publishes (and thus ''displays'') the control number in the **Federal Register** as part of the regulatory text for the final rule or in a technical amendment to the final rule, then the Office of the Federal Register will automatically place the control number in the Code of Federal Regulations. By contrast, if the agency publishes (and thus ''displays'') the control number in the **Federal Register** as part of the preamble for the final rule or in a separate notice announcing that OMB has approved the collection of information, then the Office of the Federal Register will not automatically place the control number in the Code of Federal Regulations. In the latter situation, although the agency has already ''displayed'' the control number by publishing it in the preamble or in a separate notice, OMB recommends for ease of future reference that the agency also place the control number in a table or codified section to be included in the Code of Federal Regulations. In addition to aiding in future reference, such a table or codification section would itself constitute an alternative form of ''display.'' The placement of the control number in regulations is governed by a regulation issued by the Administrative Committee of the Federal Register, at 1 CFR 21.35. The same background principles apply to the application of § 1320.5(b)(2)(ii)(C).

5. Proposed § 1320.3(h)(1) (Definition of ''information''): In the NPRM, OMB clarified the exemption for ''certifications'' in proposed § 1320.3(h)(1) to ensure that the exempted certification is used only to identify an individual in a routine, non-intrusive, non-burdensome way. OMB further stated that the exemption is not to be available for a certification that substitutes for a collection of information to collect evidence of, or to monitor, compliance with regulatory standards.

A comment objected to the burden of agency certification requirements and, while supportive of the proposed clarification, suggested the following amendment: ''A certification that requires more than the identity of the respondent, the date, the respondent's address, and the nature of the instrument will be considered to be 'information' unless and until the Agency demonstrates and OMB determines that it is not 'information' following OMB review and public comment in accordance with the requirements of § 1320.11.'' On the other hand, another comment suggested that the use of certifications in lieu of detailed records is a way to reduce, to the lowest possible level, the burden imposed on respondents, and that a certification of compliance with a regulatory requirement is a de minimis

activity compared to full recordkeeping. This commenter suggested that the certification exemption be broadened to include any certification of compliance with a regulatory requirement.

Given that the issue in dispute involves paperwork burdens—which is one of the primary issues that OMB is to evaluate under the Paperwork Reduction Act, it is appropriate for OMB to review such certifications in order to evaluate the burden involved and balance those concerns against agency need. For example, the one commenter stated that certification requirements impose less burden than full recordkeeping requirements. The imposition of less burden would of course be an important consideration in evaluating a proposed certification requirements under the ''practical utility''-''burden'' criteria. However, the fact that certification requirements may impose less burden than full recordkeeping does not argue for exempting them altogether from review. With respect to the other commenter's suggested amendment, OMB believes that the provision in the NPRM should address the commenter's fundamental concerns. Before concluding that the provision should be revised further, OMB prefers to see whether any issues arise in implementing this provision in the context of concrete situations. The final rule is left unchanged.

6. Proposed § 1320.3(k) (Definition of ''person''): In proposed § 1320.3(k), the definition of ''person'' included ''corporation (including operations of government-owned, contractor-operated facilities).'' One comment suggested that ''Government-owned contractor-operated facilities contractors'' should be excluded from this definition of ''person.''

This portion of proposed § 1320.3(k) is identical to that found in the OMB regulations since 1983 (see 5 CFR 1320.7(p) (1984); 5 CFR 1320.7(n) (1989)). As OMB explained in 1983: ''In response to a request for clarification, the term 'person' has been defined to include 'operations of government-owned contractor-operated facilities.' Such operations are specifically excepted from the statutory definition of 'agency,' see 44 U.S.C. 3502(1) [(1981)]. Since they are not agencies, but are private businesses falling within the purposes of the Act, they are covered as 'persons' '' (48 FR 13677 [March 31, 1983]). Since Congress did not substantively amend the definitions of ''agency'' and ''person'' in the 1995 Act, the final rule is left unchanged.

7. Proposed § 1320.4 (''Coverage''): In the NPRM, OMB pointed out that, for certain agency offices, including Chief Financial Officers or Inspectors General, an investigation (a term used in 44 U.S.C. 3518(c)(1) and (2)) often carries the title of ''audit'' (a term used in the Inspector General Act, Section 3(a), 5 U.S.C. App. 3). Several Inspectors General suggested that the scope of the exemptions should make specific reference to the word ''audit.'' The final rule is modified accordingly, with equivalent amendments to § 1320.4(a)(2), § 1320.4(b), and § 1320.4(c). These changes are made for clarification; no substantive change is intended.

8. Proposed § 1320.6(e) (''Public Protection''): In the NPRM, OMB stated in proposed § 1320.6(e) that the Act's ''public protection'' provision in 44 U.S.C. 3512 ''does not preclude the imposition of a penalty on a person for failing to comply with a collection of information that is imposed on the person by statute''. The proposed regulation also provided two examples of such a statute: 26 U.S.C. 6011(a) and 42 U.S.C. 6938(c).

In the preamble of the NPRM, OMB explained that the proposed provision ''is based on the principle announced by the courts in several cases which addressed the issue of whether the public protection provided by 44 U.S.C. 3512 could preclude the Federal government from prosecuting persons for their failure to perform paperwork duties imposed upon them by statute. * * * In those cases, the courts concluded that Congress, in enacting the Paperwork Reduction Act, did not intend to require itself to comply with the requirements of that Act (and seek and obtain OMB approval) whenever Congress decided to impose a paperwork requirement on persons directly by statute.'' 60 FR at 30441. Thus, the preamble described proposed § 1320.6(e) as stating the principle ''where Congress imposes a collection of information directly on persons, by statute [as in those two statutory examples in the proposed regulation], then the public protection provided by proposed § 1320.6(a) would not preclude the imposition of penalties for a person's failure to comply with the statutory mandate.'' Id. The preamble concluded by noting that ''[t]his principle, however, does not extend to situations in which a statute authorizes, or directs, an agency to impose a collection of information on persons, and the agency does so. In such cases, the agency is obligated to comply with the Paperwork Reduction Act of 1995 in imposing the paperwork requirement (just as the agency must comply with other applicable statutes—e.g. the Administrative Procedure Act in the case of regulations), and the public protection provided by proposed § 1320.6(a) would apply to such paperwork requirements.'' Id.

OMB received four comments regarding proposed § 1320.6(e). These comments criticized the provision as either too broad or too narrow. For the reasons stated below, the final rule adopts the provision as proposed.

Three comments objected to proposed § 1320.6(e) as being too broad. They stated that proposed § 1320.6(e) would undermine agency compliance with the Paperwork Reduction Act's requirements. These commenters understood proposed § 1320.6(e) to mean that agencies would not be required to comply with the requirements of the Paperwork Reduction Act with regard to paperwork requirements that agencies impose in connection with those statutes in which Congress has imposed collections of information directly on persons. These comments objected to such a reading of the Act, pointing out that Congress intended the agencies to comply with the Act's requirements with regard to all of their collections of information, including those mandated by statute. As one comment stated: ''Even if a collection is mandated by statute, the law requires that the specifics be put out for public comment and subjected to OMB review.'' For this reason, that comment objected that proposed § 1320.6(e) ''creates an unnecessary loophole and is a back door signal to agencies to declare that their collection requirements are mandated by statutory action and therefore not subject to public comment and OMB review.'' Another comment made the same objection, stating that proposed § 1320.6(e) ''would enable federal agencies to undermine and avoid fundamental requirements of this law [i.e., the Paperwork Reduction Act] by mere assertion that collections of information were statutorily mandated.'' Finally, the third comment stated that the ''plain meaning'' of 44 U.S.C. 3512 ''is clear and unambiguous; the regulations should be revised to make it clear that a valid OMB control number and the notice that one does not have to comply if a valid control number is not displayed should be required on all covered information requests from the Federal government.''

In addition to the three comments that criticized proposed § 1320.6(e) as being too broad, OMB received one comment that took the contrary view, contending that proposed § 1320.6(e) was too narrow. In summarizing proposed § 1320.6(e), this comment stated that ''1320.6(e) provides that the public

protection provision does not apply to noncompliance with collections of information imposed on persons by statute. The preamble (at 30441) explains that the scope of this provision is limited to collections of information imposed 'on persons *directly* by statute' and 'does not extend to situations in which a statute * * * directs an agency to impose a collection of information on persons, and the agency does so.' '' (Emphasis supplied in comment.) According to the comment, ''This distinction * * * is not supported by the case law,'' which in this commenter's view, ''simply distinguishes collections of information mandated by Congress in statute from those imposed by regulation under an agency's discretionary authority.'' For this reason, the comment concluded that proposed § 1320.6(e) was too narrowly drawn, and should be broadened: ''Thus, the scope of section 1320.6(e) should cover all collections of information specifically mandated by statute, regardless of whether Congress imposes them on persons directly or through an agency.''

With respect to the criticism that proposed § 1320.6(e) is too broad, OMB did not intend in proposed § 1320.6(e) or in the preamble of the NPRM to suggest that the requirements of the Paperwork Reduction Act do not apply to agency paperwork requirements that implement mandates that Congress imposes on persons. We agree with these comments that the legislative history to the Paperwork Reduction Act of 1980 indicates the Act's broad coverage with respect to agency collections of information: ''Unless the collection of information is specifically required by statutory law the Director's determination is final for agencies which are not independent regulatory agencies. The fact the collection of information is specifically required by statute does not, however, relieve an agency of the obligation to submit the proposed collection for the Director's review'' (S. Rpt. 96–930, at p. 49).

Accordingly, OMB's 1983 regulations implementing the 1980 Act stated that ''OMB will consider necessary any collection of information specifically mandated by statute or court order, but will independently assess any collection of information to the extent that the agency exercises discretion in its implementation'' (5 CFR 1320.4(c)(1) (1984)). This provision has remained in OMB's regulations since then. Moreover, it was included in the proposed rule at § 1320.5(e)(1), where it is found in the final rule issued today.

OMB's intention in proposed § 1320.6(e) was therefore not to exempt any agency collections of information from the requirements of the Paperwork Reduction Act. Instead, our intention was to address the consequences under the Act's public protection provision if an agency fails to comply with the Act's requirements with respect to a particular collection of information. In the cases that OMB discussed in the NPRM, the courts held that an agency's failure to comply with the Act cannot preclude the enforcement of a requirement that Congress in a statute has imposed on persons. The reason for this conclusion, as those courts explained (see 60 FR 30441), was that Congress did not subject its law-making process to the requirements of the Paperwork Reduction Act.

In other words, Congress in the Paperwork Reduction Act did not provide that Congress must comply with the Act's requirements, which include seeking and obtaining OMB approval (and periodic reapproval), when Congress passes a law that imposes paperwork requirements on the public. OMB does not review laws for compliance with the Paperwork Act, and thus, laws do not have to display OMB control numbers and do not require subsequent OMB review and approval at least once every three years.

This is not to say that an agency's implementing forms, regulations, and other directives to the public are exempt from the Act's requirements; those implementing forms, regulations, and directives are indeed subject to the Act's requirements. However, it does mean that an agency's failure to comply with the Act cannot preclude the enforcement of a statute that imposes paperwork requirements on persons. Otherwise, agency officials, by failing to satisfy their statutory obligations, would have the power to nullify a requirement that Congress imposes on persons by statute. The Act's public protection provision does not have such a reach.

Accordingly, as we have clarified above, proposed § 1320.6(e) does not exempt any agency collections of information from the Act's requirements. We believe that, with this clarification, we have addressed the main concerns that were expressed by the three commenters who considered proposed § 1320.6(e) to be too broad. To the extent that the comments are suggesting that the Act's public protection provision precludes the Government from enforcing duties that Congress imposes on persons by statute, we believe that the Act does not support such an interpretation, for the reasons outlined above.

With respect to the one comment that criticized proposed § 1320.6(e) as being too narrow, we believe that the suggestion in this comment is contrary to the Congressional intent behind the Act's public protection provision and is contrary to administrative practice generally. As noted above, this comment asserts that the case law discussed in the proposed rule's preamble ''simply distinguishes collections of information mandated by Congress in statute from those imposed by regulation under an agency's discretionary authority.'' According to the comment, ''the scope of section 1320.6(e) should cover all collections of information specifically mandated by statute, regardless of whether Congress imposes them on persons directly or through an agency.'' In other words, whereas OMB's proposed § 1320.6(e) stated that the public protection provision does not apply to paperwork requirements that Congress imposes upon persons by statute, the commenter's view is that the public protection provision also does not apply to any paperwork requirement that an agency imposes on persons in response to a statutory requirement that the agency impose such a requirement.

OMB does not agree with this reading of the Act. As we explained above, statutes are not subject to the Paperwork Reduction Act. Therefore, Congress does not have to seek and obtain OMB approval for the statutes that Congress enacts, and the Act's public protection provision cannot preclude the enforcement of a statute that imposes paperwork requirements on persons. It is an entirely different matter when Congress in a statute requires an agency to impose a paperwork requirement on persons.

In this regard, moreover, the comment's suggested reading of the public protection provision would substantially narrow its scope. Agencies impose many collections of information in response to mandates that they receive from Congress (although, as OMB's regulation indicates, see § 1320.5(e)(1), these mandates may leave agencies with varying degrees of discretion). Nothing in the Act's public protection provision supports the comment's suggested distinction between agency action that is ''mandated by Congress'' and agency action that is ''discretionary,'' just as there is no such distinction in the Administrative Procedure Act.

In sum, an agency's failure to comply with the Paperwork Reduction Act cannot override a statutory obligation on persons that Congress imposes on persons through statute. By contrast, an agency's failure to comply with the requirements that Congress imposes on the agency in one statute (in this case,

the Paperwork Reduction Act) can preclude the Government from enforcing a requirement that the agency has imposed on persons, including when the agency has imposed the requirement in order to comply with a statutory obligation that Congress imposed on the agency in another statute.

9. Proposed § 1320.7(a) and (b) (''Agency head and Senior Official responsibilities''): In the NPRM, OMB recognized that the Inspectors General have an important statutory function that requires independence in the conduct of their work. OMB sought public comment on how best to implement the objectives of the Paperwork Reduction Act of 1995 while maintaining the practical ability of the Inspectors General to perform their statutory functions. (60 FR 30440.)

All the Inspectors General who responded and one private party were concerned about the need to protect the statutory independence of Inspectors General, which is based on two sections of the Inspector General Act (5 U.S.C. App. 3). First, ''each Inspector General * * * is authorized * * * to make such investigations and reports relating to the administration of the programs and operations of the applicable establishment as are, in the judgment of the Inspector General, necessary or desirable'' (Sec. 6(a)(2)). Second, ''each Inspector General shall report to and be under the general supervision of the head of the establishment involved or, to the extent such authority is delegated, to the officer next in rank below such head, but shall not report to, or be subject to supervision by, any other officer of such establishment'' (Sec. 3(a)).

On the other hand, a comment suggested that ''unless the information requested by the Inspectors General falls into one of the categories of information expressly excluded from coverage by the [Paperwork Reduction] Act under sections 3502(3) and 3518(c)(1) [of title 44, U.S.C.], the Inspectors General must comply with the PRA and implementing regulations.'' Two other comments expressed similar views.

One issue of particular concern to the Inspectors General was that involving proposed § 1320.4, discussed above. A second issue was a suggestion in the comments that Inspectors General be added to the list of agencies that are designated as independent regulatory agencies (see 44 U.S.C. 3502(5) and 5 CFR 1320.3(g)). With respect to this suggestion, OMB does not believe that the Inspectors General qualify as a ''similar agency designated by statute as a Federal independent regulatory agency or commission'' under the statute.

A third issue of particular concern involves proposed § 1320.7(a) and (b), and the relationship of the agency head, the Senior Official, and the Inspector General's office. Under proposed § 1320.7(a) and (b), the head of each agency is responsible for carrying out agency responsibilities under this Act, but either may designate a Senior Official to carry out these responsibilities or ''may retain full undelegated review authority for any component of the agency which by statute is required to be independent of any agency official below the agency head'' (proposed § 1320.7(b)). OMB explained the need for the agency head to retain full undelegated review authority in 1982: ''Section 3506 of the [Paperwork Reduction] Act must be accommodated to other laws concerning intra-agency structures, by providing that an agency head may retain full undelegated review authority for any component of the agency which by statute is required to be independent of any agency official below the agency head'' (47 FR 39521 [September 8, 1982]).

Given their concerns about institutional independence, the Inspectors General suggested a number of alternatives—that the ''may'' in proposed § 1320.7(b) be changed to ''shall''; that the agency head designate the Inspector General to be the ''Senior Official''; or that the agency head review a proposed collection of information by the Inspector General and forward comments on it to OMB, but not be able to ''impound'' the proposed collection of information.

OMB is sensitive to the concerns that the Inspectors General have raised regarding their independence under the Inspector General Act. However, OMB is reluctant through provisions in a rulemaking implementing the Paperwork Reduction Act to seek to establish agency institutional relations between an agency head and the agency's Inspector General, particularly as these relations are already well established through statute and agency practice. It is also inappropriate in this rulemaking for OMB to impose on agencies and their Inspectors General an interpretation of the Inspector General Act. However, in evaluating the three suggestions noted above, OMB must bring to bear the terms of the Paperwork Reduction Act of 1995 and OMB's experience in implementing the predecessor statutes.

On this basis, OMB has decided not to adopt these suggestions. First, OMB disagrees with changing the ''may'' in proposed § 1320.7(b) to ''shall.'' The Inspectors General are not the only independent components located within agency structures (e.g., the Federal Energy Regulatory Commission within the Department of Energy). While the final rule states that an agency head ''may'' retain full undelegated review authority for any statutorily independent component of the agency, it is not appropriate for OMB in this rulemaking to compel an agency head to retain full undelegated review authority. OMB notes, nonetheless, that it would be appropriate and consistent with the structure and intent of the Paperwork Reduction Act for an agency head to retain full undelegated Paperwork Reduction Act oversight authority over an Inspector General. Second, OMB does not want to encourage an agency head to designate an Inspector General as the agency's Senior Official. Under 44 U.S.C. 3506(a)(2) and (b), an agency head (other than in the Department of Defense) may delegate the agency's Paperwork Reduction Act responsibilities only to ''a'' Senior Official. For an Inspector General to undertake paperwork review and clearance responsibilities for an entire agency may be both inappropriate and impractical, particularly since the Senior Official's responsibilities are broader than just paperwork review and clearance. This regulation preserves the agency head's discretion to determine the appropriate Senior Official for that agency. Third, the suggestion that the regulation state that an agency head may review and comment on a proposed collection of information, but may not ''impound'' it, appears to involve an interpretation of the Inspector General Act. While this regulation does not preclude an agency and its Inspector General from establishing such an institutional relationship, it would not be appropriate for OMB to mandate it in this rulemaking.

In sum, there are a number of ways, consistent with the Paperwork Reduction Act, in which agency heads and Inspectors General could decide to submit information clearance packages for OMB review, which would be for them to decide. Because the proposed rule, in proposed § 1320.7(a) and (b), is neither prescriptive of an approach, nor preclusive of any approach that serves this end, the final rule is left unchanged. In addition, while OMB has not yet reached any firm conclusions on this point, OMB believes that it would be worthwhile to explore whether, in light of the Inspector General Act, it would be consistent with the Paperwork Reduction Act for an Inspector General

to ''establish a process [within his or her office] * * * that is sufficiently independent of [the Inspector General's] program responsibility to evaluate fairly whether proposed collections of information should be approved'' under the Act (44 U.S.C. 3506(c)(1)). Under such an approach, the ''independent'' office within the Office of Inspector General would develop information clearance packages for OMB review (for those that are not otherwise exempt from review) and transmit them directly to OMB for review, perhaps with copies simultaneously to the agency head to permit the agency head to transmit any comments to OMB as he or she may deem appropriate.

10. Proposed § 1320.8(b)(2) (''Agency collection of information responsibilities''): Proposed § 1320.8(b)(2) instructs the agency office established under § 1320.7 to assure, under 44 U.S.C. 3506(c)(1)(B)(ii), that each agency collection of information ''is reviewed'' by OMB in accordance with the clearance requirements of 44 U.S.C. 3507. One comment suggested the insertion of ''has been reviewed''. We believe that, in context, this provision states an ongoing responsibility and that the inserted phrase is not needed. The final rule is left unchanged.

11. Proposed § 1320.8(d)(2) (''Agency collection of information responsibilities''): In the NPRM, OMB proposed that, where an agency does not publish the proposed collection of information, together with related instructions, as part of the **Federal Register** notice, the agency either provide more than 60-day notice to permit timely receipt of a copy by interested members of the public or explain how and from whom a copy can be obtained without charge (including by electronic access). See preamble discussion at 60 FR 30442. A comment suggested that the 60-day advance notice provides sufficient time for those interested to obtain a copy of the proposed collection of information and to comment upon it.

OMB believes that the proposed provision is reasonable. It gives agencies a choice of providing more than 60 days for comment, or explaining in the **Federal Register** notice how and from whom a copy can be obtained. The proposed provision therefore ensures that the public receives ''60-day notice in the **Federal Register**,'' as 44 U.S.C. 3506(c)(2) requires. Accordingly, the provision is left unchanged in the final rule.

12. Proposed § 1320.9(f) (''Agency certifications for proposed collections of information''): Proposed § 1320.9(f) has each agency include with its paperwork clearance package to OMB a certification that the collection of information ''indicates for each recordkeeping requirement the length of time persons are required to maintain the records specified''. One concern is that the recordkeeper be made aware of the length of the retention; a comment suggested that agencies should be encouraged to publish the applicable retention period ''on all relevant documents.'' Another concern is that at least some existing retention periods are open-ended; for example, 26 CFR 1.6001–1(e) requires records to ''be retained so long as the contents thereof may become material in the administration of any internal revenue law.''

In the final rule, this provision is left unchanged. It simply reiterates the statutory requirement in 44 U.S.C. 3506(c)(3)(F). OMB believes that any implementation issues that arise are best addressed in particular concrete situations.

13. Proposed § 1320.11(a) (''Clearance of collections of information in proposed rules''): Under proposed § 1320.11(a), the agency is to include a statement, in a Notice of Proposed Rulemaking containing collections of information, that those collections have been submitted for OMB review, and that the public should direct their comments to the Office of Information and Regulatory Affairs (OIRA) within OMB.

Several comments pointed out that the statement in a proposed rule concerning OMB review of collections of information needed to comply with not only the requirements in proposed § 1320.5(a)(1)(iv), but also those in proposed § 1320.8(d) (See 44 U.S.C. 3507(a)(1)(D) and 44 U.S.C. 3506(c)(2)(B)). In the final rule, § 1320.11(a) is modified to refer to both of these provisions.

In addition, several comments raised a concern with the following sentence in proposed § 1320.11(a): ''The statement shall request that comments be submitted to OMB within 60 days of the notice's publication.'' This sentence does not appear in the previously existing counterpart § 1320.13(a).

These comments pointed out that OMB is obligated both to ''provide at least 30 days for public comment prior to making a decision'' under proposed § 1320.11 (see 44 U.S.C. 3507(b)), and also to make its decision ''within 60 days'' (44 U.S.C. 3507(d)(1)(B)). The comments suggested that OMB should change the sentence to have agencies request the public to submit comments to OMB within 30 days of the notice's publication, thus providing OMB adequate time to review the public's comments before making its decision.

For the reasons discussed below, OMB is deleting this sentence from § 1320.11(a) in the final rule. For many Notices of Proposed Rulemaking, agencies provide the public with 60 days to comment (cf. Section 6(a)(1) in Executive Order No. 12866, 58 FR 51740 (October 4, 1993), which encourages agencies to ''afford the public a meaningful opportunity to comment on any proposed regulation''). To change the sentence in proposed § 1320.11(a) to have agencies allow the public only 30 days for comments to OMB, but to retain 60 days for comments to the agency, may confuse the public and have the unintended consequence of encouraging all the public comments to be submitted to OMB and the agency within 30 days. On the other hand, to require agencies to provide a 60-day comment period for OMB submissions may needlessly confuse the public for those proposed rules for which the agency wishes to allow a 30-day comment period (often used for routine or administrative regulations) or a 90-day comment period (often used for particularly significant regulations). In addition, the absence of this sentence from the previously existing counterpart § 1320.13(a) has not appeared to interfere with the public's awareness of the need to send pertinent comments to OMB in a timely manner. In addition to deleting the sentence from proposed § 1320.11(a), OMB has also deleted a parallel ''30-day'' statement that was in proposed § 1320.5(a)(1)(iv). However, OMB has retained the parallel ''30-day'' statements that were in proposed § 1320.10(a) and in proposed § 1320.12(c).

OMB requests that agencies, in providing guidance in their statement directing comments concerning collections of information to OMB, point out that OMB is required to make a decision concerning the collections of information contained in the proposed rule between 30 and 60 days after publication and that a comment to OMB is best assured of having its full effect if OMB receives it within 30 days of publication. Such a statement, however, should only be done in a way that does not confuse the public concerning the comment period that the agency wishes to provide for the proposed rule.

14. Proposed § 1320.13 (''Emergency processing''): Proposed § 1320.13 (preamble) authorizes the agency head or Senior Official to request emergency processing of an agency's submission of a collection of information for review. One comment suggested that the

designee, authorized under § 1320.7(e), should also be able to make such a request.

OMB agrees, and the final rule is modified accordingly. An emergency may arise when the agency head or Senior Official is not available, for any reason. In order to make the lines of responsibility clear, the designee authorized under this Part should be an individual located in an office that is independent of the office with responsibility for implementing the collection of information involved (cf. 44 U.S.C. 3506(c)(1)).

Other Changes

15. In addition to the revisions discussed above, additional revisions have been made. These were generally technical and non-substantive in nature, designed to correct mistakes, improve clarity, and remove ambiguities. For example, in the definition of ''collection of information'' in § 1320.3(c)(1), the reference to ''collections of information contained in, derived from, or authorized by such rules or regulations'' was removed as surplusage (being contained by implication in the final sentence); the references to ''electronic'', ''mechanical'' and ''other technological'' collection techniques, though implicit, were added to increase clarity; and ''recordkeeping'' in the last sentence was replaced with ''collection of information'' for clarity. Similarly, in the definition of ''information'' in § 1320.3(h), the added reference to ''estimate'' was implicit, but increases clarity. In addition, proposed § 1320.5(d)(2)(vii) was dropped as surplusage; such collections of information are subject to the same review and clearance process that applies to collections of information generally. Other such changes are found in § 1320.3(b)(1)(vi), § 1320.3(c) (preamble), § 1320.3(g), § 1320.3(l), § 1320.5(a)(1)(iii), § 1320.5(a)(1)(iv), § 1320.5(a)(1)(iv)(B), § 1320.5(b)(2)(ii)(D), § 1320.5(d)(2), § 1320.5(h), § 1320.8(a)(5), § 1320.8(b)(3), § 1320.8(c)(2), § 1320.8(d)(1)(ii) and (iv), § 1320.12(b)(2), § 1320.12(f)(1)(ii), § 1320.16(b)(1), and Appendix A1 and A2.

Other Comments

16. OMB received letters from several State agencies. The specific comments varied, but the common theme was a concern that OMB's proposed regulation would require the State agencies to obtain OMB Paperwork Reduction Act approval for all the forms they use. The State agencies believed this could undermine their ability to perform their mission.

The Paperwork Reduction Act applies to a collection of information that is ''conducted or sponsored'' by an agency (i.e., Federal agencies) (see § 1320.3 (a) and (d); S. Rpt. 104–8, p. 36; H. Rpt. 104–37, p. 36). Accordingly, a State agency is not required to obtain OMB approval in order to undertake, on its own initiative, to collect information. However, in those cases where the State agency's collection of information is being ''conducted or sponsored'' by a Federal agency, then the Federal agency would need to obtain OMB approval for the collection of information.

17. OMB received two comments expressing contradictory interpretations of the following statutory provision involving agency statistical policy and coordination: ''With respect to statistical policy and coordination, each agency shall * * * protect respondents' privacy and ensure that disclosure policies fully honor pledges of confidentiality'' (44 U.S.C. 3506(e)(3)).

In its Paperwork Reduction Act regulation, OMB has addressed the need to ensure confidentiality with respect to collections of information generally. That provision has been found at 5 C.F.R. 1320.6(i) (1984). In the proposed rule, this provision was moved to § 1320.5(d)(2)(ix). The proposed rule also included additional provisions regarding confidentiality, at § 1320.5(d)(2)(viii) and § 1320.8(b)(3)(v). These provisions have been retained in this final rule, at § 1320.5(d)(2)(vii)–(viii) and § 1320.8(b)(3)(v). To the extent that issues involving the application of 44 U.S.C. 3506(e)(3) arise in the course of the development and review of proposed collections of statistical information, those issues are best addressed in particular concrete situations.

Assessment of Potential Costs and Benefits and Regulatory Flexibility Act Analysis

OMB has analyzed the effects of this rule under the Regulatory Flexibility Act (5 U.S.C. §§ 601 et seq.). Copies of this analysis are available upon request. In summary, OMB has concluded that these amendments will have a salutary impact on small entities through the reduction of unnecessary paperwork.

For purposes of the Unfunded Mandates Reform Act of 1995 (P.L. 104–4), as well as Executive Order No. 12875, this rule does not include any Federal mandate that may result in increased expenditures by State, local, and tribal governments, or by the private sector.

Issued in Washington, DC, August 21, 1995.

Sally Katzen,

Administrator, Office of Information and Regulatory Affairs.

List of Subjects in 5 CFR Part 1320

Reporting and recordkeeping requirements, Paperwork, Collections of information.

5 CFR Part 1320 is revised to read as follows:

PART 1320—CONTROLLING PAPERWORK BURDENS ON THE PUBLIC

Sec.
1320.1 Purpose.
1320.2 Effect.
1320.3 Definitions.
1320.4 Coverage.
1320.5 General requirements.
1320.6 Public protection.
1320.7 Agency head and Senior Official responsibilities.
1320.8 Agency collection of information responsibilities.
1320.9 Agency certifications for proposed collections of information.
1320.10 Clearance of collections of information, other than those contained in proposed rules or in current rules.
1320.11 Clearance of collections of information in proposed rules.
1320.12 Clearance of collections of information in current rules.
1320.13 Emergency processing.
1320.14 Public access.
1320.15 Independent regulatory agency override authority.
1320.16 Delegation of approval authority.
1320.17 Information collection budget.
1320.18 Other authority.

Appendix A: Agencies with Delegated Review and Approval Authority

Authority: 31 U.S.C. Sec. 1111 and 44 U.S.C. Chs. 21, 25, 27, 29, 31, 35.

§ 1320.1 Purpose.

The purpose of this Part is to implement the provisions of the Paperwork Reduction Act of 1995 (44 U.S.C. chapter 35)(the Act) concerning collections of information. It is issued under the authority of section 3516 of the Act, which provides that ''The Director shall promulgate rules, regulations, or procedures necessary to exercise the authority provided by this chapter.'' It is designed to reduce, minimize and control burdens and maximize the practical utility and public benefit of the information created, collected, disclosed, maintained, used, shared and disseminated by or for the Federal government.

§ 1320.2 Effect.

(a) Except as provided in paragraph (b) of this section, this Part takes effect on October 1, 1995.

(b)(1) In the case of a collection of information for which there is in effect on September 30, 1995, a control number issued by the Office of Management and Budget under 44 U.S.C. Chapter 35, the provisions of this Part shall take effect beginning on the earlier of:

(i) the date of the first extension of approval for or modification of that collection of information after September 30, 1995; or

(ii) the date of the expiration of the OMB control number after September 30, 1995.

(2) Prior to such extension of approval, modification, or expiration, the collection of information shall be subject to 5 CFR Part 1320, as in effect on September 30, 1995.

§ 1320.3 Definitions.

For purposes of implementing the Act and this Part, the following terms are defined as follows:

(a) *Agency* means any executive department, military department, Government corporation, Government controlled corporation, or other establishment in the executive branch of the government, or any independent regulatory agency, but does not include:

(1) the General Accounting Office;

(2) Federal Election Commission;

(3) the governments of the District of Columbia and the territories and possessions of the United States, and their various subdivisions; or

(4) government-owned contractor-operated facilities, including laboratories engaged in national defense research and production activities.

(b)(1) *Burden* means the total time, effort, or financial resources expended by persons to generate, maintain, retain, or disclose or provide information to or for a Federal agency, including:

(i) reviewing instructions;

(ii) developing, acquiring, installing, and utilizing technology and systems for the purpose of collecting, validating, and verifying information;

(iii) developing, acquiring, installing, and utilizing technology and systems for the purpose of processing and maintaining information;

(iv) developing, acquiring, installing, and utilizing technology and systems for the purpose of disclosing and providing information;

(v) adjusting the existing ways to comply with any previously applicable instructions and requirements;

(vi) training personnel to be able to respond to a collection of information;

(vii) searching data sources;

(viii) completing and reviewing the collection of information; and

(ix) transmitting, or otherwise disclosing the information.

(2) The time, effort, and financial resources necessary to comply with a collection of information that would be incurred by persons in the normal course of their activities (e.g., in compiling and maintaining business records) will be excluded from the ''burden'' if the agency demonstrates that the reporting, recordkeeping, or disclosure activities needed to comply are usual and customary.

(3) A collection of information conducted or sponsored by a Federal agency that is also conducted or sponsored by a unit of State, local, or tribal government is presumed to impose a Federal burden except to the extent that the agency shows that such State, local, or tribal requirement would be imposed even in the absence of a Federal requirement.

(c) *Collection of information* means, except as provided in § 1320.4, the obtaining, causing to be obtained, soliciting, or requiring the disclosure to an agency, third parties or the public of information by or for an agency by means of identical questions posed to, or identical reporting, recordkeeping, or disclosure requirements imposed on, ten or more persons, whether such collection of information is mandatory, voluntary, or required to obtain or retain a benefit. ''Collection of information'' includes any requirement or request for persons to obtain, maintain, retain, report, or publicly disclose information. As used in this Part, ''collection of information'' refers to the act of collecting or disclosing information, to the information to be collected or disclosed, to a plan and/or an instrument calling for the collection or disclosure of information, or any of these, as appropriate.

(1) A *Collection of information* may be in any form or format, including the use of report forms; application forms; schedules; questionnaires; surveys; reporting or recordkeeping requirements; contracts; agreements; policy statements; plans; rules or regulations; planning requirements; circulars; directives; instructions; bulletins; requests for proposal or other procurement requirements; interview guides; oral communications; posting, notification, labeling, or similar disclosure requirements; telegraphic or telephonic requests; automated, electronic, mechanical, or other technological collection techniques; standard questionnaires used to monitor compliance with agency requirements; or any other techniques or technological methods used to monitor compliance with agency requirements. A ''collection of information'' may implicitly or explicitly include related collection of information requirements.

(2) Requirements by an agency for a person to obtain or compile information for the purpose of disclosure to members of the public or the public at large, through posting, notification, labeling or similar disclosure requirements constitute the ''collection of information'' whenever the same requirement to obtain or compile information would be a ''collection of information'' if the information were directly provided to the agency. The public disclosure of information originally supplied by the Federal government to the recipient for the purpose of disclosure to the public is not included within this definition.

(3) *Collection of information* includes questions posed to agencies, instrumentalities, or employees of the United States, if the results are to be used for general statistical purposes, that is, if the results are to be used for statistical compilations of general public interest, including compilations showing the status or implementation of Federal activities and programs.

(4) As used in paragraph (c) of this section, ''ten or more persons'' refers to the persons to whom a collection of information is addressed by the agency within any 12-month period, and to any independent entities to which the initial addressee may reasonably be expected to transmit the collection of information during that period, including independent State, territorial, tribal or local entities and separately incorporated subsidiaries or affiliates. For the purposes of this definition of ''ten or more persons,'' ''persons'' does not include employees of the respondent acting within the scope of their employment, contractors engaged by a respondent for the purpose of complying with the collection of information, or current employees of the Federal government (including military reservists and members of the National Guard while on active duty) when acting within the scope of their employment, but it does include retired and other former Federal employees.

(i) Any recordkeeping, reporting, or disclosure requirement contained in a rule of general applicability is deemed to involve ten or more persons.

(ii) Any collection of information addressed to all or a substantial majority of an industry is presumed to involve ten or more persons.

(d) *Conduct or Sponsor.* A Federal agency is considered to ''conduct or

sponsor'' a collection of information if the agency collects the information, causes another agency to collect the information, contracts or enters into a cooperative agreement with a person to collect the information, or requires a person to provide information to another person, or in similar ways causes another agency, contractor, partner in a cooperative agreement, or person to obtain, solicit, or require the disclosure to third parties or the public of information by or for an agency. A collection of information undertaken by a recipient of a Federal grant is considered to be ''conducted or sponsored'' by an agency only if:

(1) the recipient of a grant is conducting the collection of information at the specific request of the agency; or

(2) the terms and conditions of the grant require specific approval by the agency of the collection of information or collection procedures.

(e) *Director* means the Director of OMB, or his or her designee.

(f) *Display* means:

(1) in the case of forms, questionnaires, instructions, and other written collections of information sent or made available to potential respondents (other than in an electronic format), to place the currently valid OMB control number on the front page of the collection of information;

(2) in the case of forms, questionnaires, instructions, and other written collections of information sent or made available to potential respondents in an electronic format, to place the currently valid OMB control number in the instructions, near the title of the electronic collection instrument, or, for on-line applications, on the first screen viewed by the respondent;

(3) in the case of collections of information published in regulations, guidelines, and other issuances in the **Federal Register**, to publish the currently valid OMB control number in the **Federal Register** (for example, in the case of a collection of information in a regulation, by publishing the OMB control number in the preamble or the regulatory text for the final rule, in a technical amendment to the final rule, or in a separate notice announcing OMB approval of the collection of information). In the case of a collection of information published in an issuance that is also included in the Code of Federal Regulations, publication of the currently valid control number in the Code of Federal Regulations constitutes an alternative means of ''display.'' In the case of a collection of information published in an issuance that is also included in the Code of Federal Regulations, OMB recommends for ease of future reference that, even where an agency has already ''displayed'' the OMB control number by publishing it in the **Federal Register** as a separate notice or in the preamble for the final rule (rather than in the regulatory text for the final rule or in a technical amendment to the final rule), the agency also place the currently valid control number in a table or codified section to be included in the Code of Federal Regulations. For placement of OMB control numbers in the Code of Federal Regulations, see 1 CFR 21.35.

(4) in other cases, and where OMB determines in advance in writing that special circumstances exist, to use other means to inform potential respondents of the OMB control number.

(g) *Independent regulatory agency* means the Board of Governors of the Federal Reserve System, the Commodity Futures Trading Commission, the Consumer Product Safety Commission, the Federal Communications Commission, the Federal Deposit Insurance Corporation, the Federal Energy Regulatory Commission, the Federal Housing Finance Board, the Federal Maritime Commission, the Federal Trade Commission, the Interstate Commerce Commission, the Mine Enforcement Safety and Health Review Commission, the National Labor Relations Board, the Nuclear Regulatory Commission, the Occupational Safety and Health Review Commission, the Postal Rate Commission, the Securities and Exchange Commission, and any other similar agency designated by statute as a Federal independent regulatory agency or commission.

(h) *Information* means any statement or estimate of fact or opinion, regardless of form or format, whether in numerical, graphic, or narrative form, and whether oral or maintained on paper, electronic or other media. ''Information'' does not generally include items in the following categories; however, OMB may determine that any specific item constitutes ''information'':

(1) affidavits, oaths, affirmations, certifications, receipts, changes of address, consents, or acknowledgments; provided that they entail no burden other than that necessary to identify the respondent, the date, the respondent's address, and the nature of the instrument (by contrast, a certification would likely involve the collection of ''information'' if an agency conducted or sponsored it as a substitute for a collection of information to collect evidence of, or to monitor, compliance with regulatory standards, because such a certification would generally entail burden in addition to that necessary to identify the respondent, the date, the respondent's address, and the nature of the instrument);

(2) samples of products or of any other physical objects;

(3) facts or opinions obtained through direct observation by an employee or agent of the sponsoring agency or through nonstandardized oral communication in connection with such direct observations;

(4) facts or opinions submitted in response to general solicitations of comments from the public, published in the **Federal Register** or other publications, regardless of the form or format thereof, provided that no person is required to supply specific information pertaining to the commenter, other than that necessary for self-identification, as a condition of the agency's full consideration of the comment;

(5) facts or opinions obtained initially or in follow-on requests, from individuals (including individuals in control groups) under treatment or clinical examination in connection with research on or prophylaxis to prevent a clinical disorder, direct treatment of that disorder, or the interpretation of biological analyses of body fluids, tissues, or other specimens, or the identification or classification of such specimens;

(6) a request for facts or opinions addressed to a single person;

(7) examinations designed to test the aptitude, abilities, or knowledge of the persons tested and the collection of information for identification or classification in connection with such examinations;

(8) facts or opinions obtained or solicited at or in connection with public hearings or meetings;

(9) facts or opinions obtained or solicited through nonstandardized follow-up questions designed to clarify responses to approved collections of information; and

(10) like items so designated by OMB.

(i) *OMB* refers to the Office of Management and Budget.

(j) *Penalty* includes the imposition by an agency or court of a fine or other punishment; a judgment for monetary damages or equitable relief; or the revocation, suspension, reduction, or denial of a license, privilege, right, grant, or benefit.

(k) *Person* means an individual, partnership, association, corporation (including operations of government-owned contractor-operated facilities), business trust, or legal representative, an organized group of individuals, a State, territorial, tribal, or local government or branch thereof, or a

political subdivision of a State, territory, tribal, or local government or a branch of a political subdivision;

(l) *Practical utility* means the actual, not merely the theoretical or potential, usefulness of information to or for an agency, taking into account its accuracy, validity, adequacy, and reliability, and the agency's ability to process the information it collects (or a person's ability to receive and process that which is disclosed, in the case of a third-party or public disclosure) in a useful and timely fashion. In determining whether information will have ''practical utility,'' OMB will take into account whether the agency demonstrates actual timely use for the information either to carry out its functions or make it available to third-parties or the public, either directly or by means of a third-party or public posting, notification, labeling, or similar disclosure requirement, for the use of persons who have an interest in entities or transactions over which the agency has jurisdiction. In the case of recordkeeping requirements or general purpose statistics (see § 1320.3(c)(3)), ''practical utility'' means that actual uses can be demonstrated.

(m) *Recordkeeping requirement* means a requirement imposed by or for an agency on persons to maintain specified records, including a requirement to:

(1) Retain such records;

(2) Notify third parties, the Federal government, or the public of the existence of such records;

(3) Disclose such records to third parties, the Federal government, or the public; or

(4) Report to third parties, the Federal government, or the public regarding such records.

§ 1320.4 Coverage.

(a) The requirements of this Part apply to all agencies as defined in § 1320.3(a) and to all collections of information conducted or sponsored by those agencies, as defined in § 1320.3 (c) and (d), wherever conducted or sponsored, but, except as provided in paragraph (b) of this section, shall not apply to collections of information:

(1) during the conduct of a Federal criminal investigation or prosecution, or during the disposition of a particular criminal matter;

(2) during the conduct of a civil action to which the United States or any official or agency thereof is a party, or during the conduct of an administrative action, investigation, or audit involving an agency against specific individuals or entities;

(3) by compulsory process pursuant to the Antitrust Civil Process Act and section 13 of the Federal Trade Commission Improvements Act of 1980; or

(4) during the conduct of intelligence activities as defined in section 3.4(e) of Executive Order No. 12333, issued December 4, 1981, or successor orders, or during the conduct of cryptologic activities that are communications security activities.

(b) The requirements of this Part apply to the collection of information during the conduct of general investigations or audits (other than information collected in an antitrust investigation to the extent provided in paragraph (a)(3) of this section) undertaken with reference to a category of individuals or entities such as a class of licensees or an entire industry.

(c) The exception in paragraph (a)(2) of this section applies during the entire course of the investigation, audit, or action, whether before or after formal charges or complaints are filed or formal administrative action is initiated, but only after a case file or equivalent is opened with respect to a particular party. In accordance with paragraph (b) of this section, collections of information prepared or undertaken with reference to a category of individuals or entities, such as a class of licensees or an industry, do not fall within this exception.

§ 1320.5 General requirements.

(a) An agency shall not conduct or sponsor a collection of information unless, in advance of the adoption or revision of the collection of information—

(1) the agency has—

(i) conducted the review required in § 1320.8;

(ii) evaluated the public comments received under § 1320.8(d) and § 1320.11;

(iii) submitted to the Director, in accordance with such procedures and in such form as OMB may specify,

(A) the certification required under § 1320.9,

(B) the proposed collection of information in accordance with § 1320.10, § 1320.11, or § 1320.12, as appropriate,

(C) an explanation for the decision that it would not be appropriate, under § 1320.8(b)(1), for a proposed collection of information to display an expiration date;

(D) an explanation for a decision to provide for any payment or gift to respondents, other than remuneration of contractors or grantees;

(E) a statement indicating whether (and if so, to what extent) the proposed collection of information involves the use of automated, electronic, mechanical, or other technological collection techniques or other forms of information technology, e.g., permitting electronic submission of responses, and an explanation for the decision;

(F) a summary of the public comments received under § 1320.8(d), including actions taken by the agency in response to the comments, and the date and page of the publication in the **Federal Register** of the notice therefor; and

(G) copies of pertinent statutory authority, regulations, and such related supporting materials as OMB may request; and

(iv) published, except as provided in § 1320.13(d), a notice in the **Federal Register**—

(A) stating that the agency has made such submission; and

(B) setting forth—

(*1*) a title for the collection of information;

(*2*) a summary of the collection of information;

(*3*) a brief description of the need for the information and proposed use of the information;

(*4*) a description of the likely respondents, including the estimated number of likely respondents, and proposed frequency of response to the collection of information;

(*5*) an estimate of the total annual reporting and recordkeeping burden that will result from the collection of information;

(*6*) notice that comments may be submitted to OMB; and

(*7*) the time period within which the agency is requesting OMB to approve or disapprove the collection of information if, at the time of submittal of a collection of information for OMB review under § 1320.10, § 1320.11 or § 1320.12, the agency plans to request or has requested OMB to conduct its review on an emergency basis under § 1320.13; and

(2) OMB has approved the proposed collection of information, OMB's approval has been inferred under § 1320.10(c), § 1320.11(i), or § 1320.12(e), or OMB's disapproval has been voided by an independent regulatory agency under § 1320.15; and

(3) the agency has obtained from the Director a control number to be displayed upon the collection of information.

(b) In addition to the requirements in paragraph (a) of this section, an agency shall not conduct or sponsor a collection of information unless:

(1) the collection of information displays a currently valid OMB control number; and

(2)(i) the agency informs the potential persons who are to respond to the collection of information that such persons are not required to respond to the collection of information unless it displays a currently valid OMB control number.

(ii) An agency shall provide the information described in paragraph (b)(2)(i) of this section in a manner that is reasonably calculated to inform the public.

(A) In the case of forms, questionnaires, instructions, and other written collections of information sent or made available to potential respondents (other than in an electronic format), the information described in paragraph (b)(2)(i) of this section is provided ''in a manner that is reasonably calculated to inform the public'' if the agency includes it either on the form, questionnaire or other collection of information, or in the instructions for such collection.

(B) in the case of forms, questionnaires, instructions, and other written collections of information sent or made available to potential respondents in an electronic format, the information described in paragraph (b)(2)(i) of this section is provided ''in a manner that is reasonably calculated to inform the public'' if the agency places the currently valid OMB control number in the instructions, near the title of the electronic collection instrument, or, for on-line applications, on the first screen viewed by the respondent.

(C) in the case of collections of information published in regulations, guidelines, and other issuances in the **Federal Register**, the information described in paragraph (b)(2)(i) of this section is provided ''in a manner that is reasonably calculated to inform the public'' if the agency publishes such information in the **Federal Register** (for example, in the case of a collection of information in a regulation, by publishing such information in the preamble or the regulatory text, or in a technical amendment to the regulation, or in a separate notice announcing OMB approval of the collection of information). In the case of a collection of information published in an issuance that is also included in the Code of Federal Regulations, publication of such information in the Code of Federal Regulations constitutes an alternative means of providing it ''in a manner that is reasonably calculated to inform the public.'' In the case of a collection of information published in an issuance that is also included in the Code of Federal Regulations, OMB recommends for ease of future reference that, even where an agency has already provided such information ''in a manner that is reasonably calculated to inform the public'' by publishing it in the **Federal Register** as a separate notice or in the preamble for the final rule (rather than in the regulatory text for the final rule or in a technical amendment to the final rule), the agency also publish such information along with a table or codified section of OMB control numbers to be included in the Code of Federal Regulations (see § 1320.3(f)(3)).

(D) in other cases, and where OMB determines in advance in writing that special circumstances exist, to use other means that are reasonably calculated to inform the public of the information described in paragraph (b)(2)(i) of this section.

(c)(1) Agencies shall submit all collections of information, other than those contained in proposed rules published for public comment in the **Federal Register** or in current regulations that were published as final rules in the **Federal Register**, in accordance with the requirements in § 1320.10. Agencies shall submit collections of information contained in interim final rules or direct final rules in accordance with the requirements of § 1320.10.

(2) Agencies shall submit collections of information contained in proposed rules published for public comment in the **Federal Register** in accordance with the requirements in § 1320.11.

(3) Agencies shall submit collections of information contained in current regulations that were published as final rules in the **Federal Register** in accordance with the requirements in § 1320.12.

(4) Special rules for emergency processing of collections of information are set forth in § 1320.13.

(5) For purposes of time limits for OMB review of collections of information, any submission properly submitted and received by OMB after 12:00 noon will be deemed to have been received on the following business day.

(d)(1) To obtain OMB approval of a collection of information, an agency shall demonstrate that it has taken every reasonable step to ensure that the proposed collection of information:

(i) is the least burdensome necessary for the proper performance of the agency's functions to comply with legal requirements and achieve program objectives;

(ii) is not duplicative of information otherwise accessible to the agency; and

(iii) has practical utility. The agency shall also seek to minimize the cost to itself of collecting, processing, and using the information, but shall not do so by means of shifting disproportionate costs or burdens onto the public.

(2) Unless the agency is able to demonstrate, in its submission for OMB clearance, that such characteristic of the collection of information is necessary to satisfy statutory requirements or other substantial need, OMB will not approve a collection of information—

(i) requiring respondents to report information to the agency more often than quarterly;

(ii) requiring respondents to prepare a written response to a collection of information in fewer than 30 days after receipt of it;

(iii) requiring respondents to submit more than an original and two copies of any document;

(iv) requiring respondents to retain records, other than health, medical, government contract, grant-in-aid, or tax records, for more than three years;

(v) in connection with a statistical survey, that is not designed to produce valid and reliable results that can be generalized to the universe of study;

(vi) requiring the use of a statistical data classification that has not been reviewed and approved by OMB;

(vii) that includes a pledge of confidentiality that is not supported by authority established in statute or regulation, that is not supported by disclosure and data security policies that are consistent with the pledge, or which unnecessarily impedes sharing of data with other agencies for compatible confidential use; or

(viii) requiring respondents to submit proprietary, trade secret, or other confidential information unless the agency can demonstrate that it has instituted procedures to protect the information's confidentiality to the extent permitted by law.

(e) OMB shall determine whether the collection of information, as submitted by the agency, is necessary for the proper performance of the agency's functions. In making this determination, OMB will take into account the criteria set forth in paragraph (d) of this section, and will consider whether the burden of the collection of information is justified by its practical utility. In addition:

(1) OMB will consider necessary any collection of information specifically mandated by statute or court order, but will independently assess any collection of information to the extent that the agency exercises discretion in its implementation; and

(2) OMB will consider necessary any collection of information specifically required by an agency rule approved or not acted upon by OMB under § 1320.11 or § 1320.12, but will independently assess any such collection of

information to the extent that it deviates from the specifications of the rule.

(f) Except as provided in § 1320.15, to the extent that OMB determines that all or any portion of a collection of information is unnecessary, for any reason, the agency shall not engage in such collection or portion thereof. OMB will reconsider its disapproval of a collection of information upon the request of the agency head or Senior Official only if the sponsoring agency is able to provide significant new or additional information relevant to the original decision.

(g) An agency may not make a substantive or material modification to a collection of information after such collection of information has been approved by OMB, unless the modification has been submitted to OMB for review and approval under this Part.

(h) An agency should consult with OMB before using currently approved forms or other collections of information after the expiration date printed thereon (in those cases where the actual form being used contains an expiration date that would expire before the end of the use of the form).

§ 1320.6 Public protection.

(a) Notwithstanding any other provision of law, no person shall be subject to any penalty for failing to comply with a collection of information that is subject to the requirements of this Part if:

(1) the collection of information does not display, in accordance with § 1320.3(f) and § 1320.5(b)(1), a currently valid OMB control number assigned by the Director in accordance with the Act; or

(2) the agency fails to inform the potential person who is to respond to the collection of information, in accordance with § 1320.5(b)(2), that such person is not required to respond to the collection of information unless it displays a currently valid OMB control number.

(b) The protection provided by paragraph (a) of this section may be raised in the form of a complete defense, bar, or otherwise to the imposition of such penalty at any time during the agency administrative process in which such penalty may be imposed or in any judicial action applicable thereto.

(c) Whenever an agency has imposed a collection of information as a means for proving or satisfying a condition for the receipt of a benefit or the avoidance of a penalty, and the collection of information does not display a currently valid OMB control number or inform the potential persons who are to respond to the collection of information, as prescribed in § 1320.5(b), the agency shall not treat a person's failure to comply, in and of itself, as grounds for withholding the benefit or imposing the penalty. The agency shall instead permit respondents to prove or satisfy the legal conditions in any other reasonable manner.

(1) If OMB disapproves the whole of such a collection of information (and the disapproval is not overridden under § 1320.15), the agency shall grant the benefit to (or not impose the penalty on) otherwise qualified persons without requesting further proof concerning the condition.

(2) If OMB instructs an agency to make a substantive or material change to such a collection of information (and the instruction is not overridden under § 1320.15), the agency shall permit respondents to prove or satisfy the condition by complying with the collection of information as so changed.

(d) Whenever a member of the public is protected from imposition of a penalty under this section for failure to comply with a collection of information, such penalty may not be imposed by an agency directly, by an agency through judicial process, or by any other person through administrative or judicial process.

(e) The protection provided by paragraph (a) of this section does not preclude the imposition of a penalty on a person for failing to comply with a collection of information that is imposed on the person by statute—e.g., 26 U.S.C. § 6011(a) (statutory requirement for person to file a tax return), 42 U.S.C. § 6938(c) (statutory requirement for person to provide notification before exporting hazardous waste).

§ 1320.7 Agency head and Senior Official responsibilities.

(a) Except as provided in paragraph (b) of this section, each agency head shall designate a Senior Official to carry out the responsibilities of the agency under the Act and this Part. The Senior Official shall report directly to the head of the agency and shall have the authority, subject to that of the agency head, to carry out the responsibilities of the agency under the Act and this Part.

(b) An agency head may retain full undelegated review authority for any component of the agency which by statute is required to be independent of any agency official below the agency head. For each component for which responsibility under the Act is not delegated to the Senior Official, the agency head shall be responsible for the performance of those functions.

(c) The Senior Official shall head an office responsible for ensuring agency compliance with and prompt, efficient, and effective implementation of the information policies and information resources management responsibilities established under the Act, including the reduction of information collection burdens on the public.

(d) With respect to the collection of information and the control of paperwork, the Senior Official shall establish a process within such office that is sufficiently independent of program responsibility to evaluate fairly whether proposed collections of information should be approved under this Part.

(e) Agency submissions of collections of information for OMB review, and the accompanying certifications under § 1320.9, may be made only by the agency head or the Senior Official, or their designee.

§ 1320.8 Agency collection of information responsibilities.

The office established under § 1320.7 shall review each collection of information before submission to OMB for review under this Part.

(a) This review shall include:

(1) an evaluation of the need for the collection of information, which shall include, in the case of an existing collection of information, an evaluation of the continued need for such collection;

(2) a functional description of the information to be collected;

(3) a plan for the collection of information;

(4) a specific, objectively supported estimate of burden, which shall include, in the case of an existing collection of information, an evaluation of the burden that has been imposed by such collection;

(5) an evaluation of whether (and if so, to what extent) the burden on respondents can be reduced by use of automated, electronic, mechanical, or other technological collection techniques or other forms of information technology, e.g., permitting electronic submission of responses;

(6) a test of the collection of information through a pilot program, if appropriate; and

(7) a plan for the efficient and effective management and use of the information to be collected, including necessary resources.

(b) Such office shall ensure that each collection of information:

(1) is inventoried, displays a currently valid OMB control number, and, if appropriate, an expiration date;

(2) is reviewed by OMB in accordance with the clearance requirements of 44 U.S.C. § 3507; and

(3) informs and provides reasonable notice to the potential persons to whom the collection of information is addressed of—

(i) the reasons the information is planned to be and/or has been collected;

(ii) the way such information is planned to be and/or has been used to further the proper performance of the functions of the agency;

(iii) an estimate, to the extent practicable, of the average burden of the collection (together with a request that the public direct to the agency any comments concerning the accuracy of this burden estimate and any suggestions for reducing this burden);

(iv) whether responses to the collection of information are voluntary, required to obtain or retain a benefit (citing authority), or mandatory (citing authority);

(v) the nature and extent of confidentiality to be provided, if any (citing authority); and

(vi) the fact that an agency may not conduct or sponsor, and a person is not required to respond to, a collection of information unless it displays a currently valid OMB control number.

(c)(1) An agency shall provide the information described in paragraphs (b)(3)(i) through (v) of this section as follows:

(i) In the case of forms, questionnaires, instructions, and other written collections of information sent or made available to potential respondents (except in an electronic format), such information can be included either on the form, questionnaire or other collection of information, as part of the instructions for such collection, or in a cover letter or memorandum that accompanies the collection of information.

(ii) in the case of forms, questionnaires, instructions, and other written collections of information sent or made available to potential respondents in an electronic format, such information can be included either in the instructions, near the title of the electronic collection instrument, or, for on-line applications, on the first screen viewed by the respondent;

(iii) In the case of collections of information published in regulations, guidelines, and other issuances in the **Federal Register**, such information can be published in the **Federal Register** (for example, in the case of a collection of information in a regulation, by publishing such information in the preamble or the regulatory text to the final rule, or in a technical amendment to the final rule, or in a separate notice announcing OMB approval of the collection of information).

(iv) In other cases, and where OMB determines in advance in writing that special circumstances exist, agencies may use other means to inform potential respondents.

(2) An agency shall provide the information described in paragraph (b)(3)(vi) of this section in a manner that is reasonably calculated to inform the public (see § 1320.5(b)(2)(ii)).

(d)(1) Before an agency submits a collection of information to OMB for approval, and except as provided in paragraphs (d)(3) and (d)(4) of this section, the agency shall provide 60-day notice in the **Federal Register**, and otherwise consult with members of the public and affected agencies concerning each proposed collection of information, to solicit comment to:

(i) evaluate whether the proposed collection of information is necessary for the proper performance of the functions of the agency, including whether the information will have practical utility;

(ii) evaluate the accuracy of the agency's estimate of the burden of the proposed collection of information, including the validity of the methodology and assumptions used;

(iii) enhance the quality, utility, and clarity of the information to be collected; and

(iv) minimize the burden of the collection of information on those who are to respond, including through the use of appropriate automated, electronic, mechanical, or other technological collection techniques or other forms of information technology, e.g., permitting electronic submission of responses.

(2) If the agency does not publish a copy of the proposed collection of information, together with the related instructions, as part of the **Federal Register** notice, the agency should—

(i) provide more than 60-day notice to permit timely receipt, by interested members of the public, of a copy of the proposed collection of information and related instructions; or

(ii) explain how and from whom an interested member of the public can request and obtain a copy without charge, including, if applicable, how the public can gain access to the collection of information and related instructions electronically on demand.

(3) The agency need not separately seek such public comment for any proposed collection of information contained in a proposed rule to be reviewed under § 1320.11, if the agency provides notice and comment through the notice of proposed rulemaking for the proposed rule and such notice specifically includes the solicitation of comments for the same purposes as are listed under paragraph (d)(1) of this section.

(4) The agency need not seek or may shorten the time allowed for such public comment if OMB grants an exemption from such requirement for emergency processing under § 1320.13.

§ 1320.9 Agency certifications for proposed collections of information.

As part of the agency submission to OMB of a proposed collection of information, the agency (through the head of the agency, the Senior Official, or their designee) shall certify (and provide a record supporting such certification) that the proposed collection of information—

(a) is necessary for the proper performance of the functions of the agency, including that the information to be collected will have practical utility;

(b) is not unnecessarily duplicative of information otherwise reasonably accessible to the agency;

(c) reduces to the extent practicable and appropriate the burden on persons who shall provide information to or for the agency, including with respect to small entities, as defined in the Regulatory Flexibility Act (5 U.S.C. 601(6)), the use of such techniques as:

(1) establishing differing compliance or reporting requirements or timetables that take into account the resources available to those who are to respond;

(2) the clarification, consolidation, or simplification of compliance and reporting requirements; or

(3) an exemption from coverage of the collection of information, or any part thereof;

(d) is written using plain, coherent, and unambiguous terminology and is understandable to those who are to respond;

(e) is to be implemented in ways consistent and compatible, to the maximum extent practicable, with the existing reporting and recordkeeping practices of those who are to respond;

(f) indicates for each recordkeeping requirement the length of time persons are required to maintain the records specified;

(g) informs potential respondents of the information called for under § 1320.8(b)(3);

(h) has been developed by an office that has planned and allocated resources for the efficient and effective management and use of the information to be collected, including the processing of the information in a manner which

shall enhance, where appropriate, the utility of the information to agencies and the public;

(i) uses effective and efficient statistical survey methodology appropriate to the purpose for which the information is to be collected; and

(j) to the maximum extent practicable, uses appropriate information technology to reduce burden and improve data quality, agency efficiency and responsiveness to the public.

§ 1320.10 Clearance of collections of information, other than those contained in proposed rules or in current rules.

Agencies shall submit all collections of information, other than those contained either in proposed rules published for public comment in the **Federal Register** (which are submitted under § 1320.11) or in current rules that were published as final rules in the **Federal Register** (which are submitted under § 1320.12), in accordance with the following requirements:

(a) On or before the date of submission to OMB, the agency shall, in accordance with the requirements in § 1320.5(a)(1)(iv), forward a notice to the **Federal Register** stating that OMB approval is being sought. The notice shall direct requests for information, including copies of the proposed collection of information and supporting documentation, to the agency, and shall request that comments be submitted to OMB within 30 days of the notice's publication. The notice shall direct comments to the Office of Information and Regulatory Affairs of OMB, Attention: Desk Officer for [name of agency]. A copy of the notice submitted to the **Federal Register**, together with the date of expected publication, shall be included in the agency's submission to OMB.

(b) Within 60 days after receipt of the proposed collection of information or publication of the notice under paragraph (a) of this section, whichever is later, OMB shall notify the agency involved of its decision to approve, to instruct the agency to make a substantive or material change to, or to disapprove, the collection of information, and shall make such decision publicly available. OMB shall provide at least 30 days for public comment after receipt of the proposed collection of information before making its decision, except as provided under § 1320.13. Upon approval of a collection of information, OMB shall assign an OMB control number and, if appropriate, an expiration date. OMB shall not approve any collection of information for a period longer than three years.

(c) If OMB fails to notify the agency of its approval, instruction to make substantive or material change, or disapproval within the 60-day period, the agency may request, and OMB shall assign without further delay, an OMB control number that shall be valid for not more than one year.

(d) As provided in § 1320.5(b) and § 1320.6(a), an agency may not conduct or sponsor a collection of information unless the collection of information displays a currently valid OMB control number and the agency informs potential persons who are to respond to the collection of information that such persons are not required to respond to the collection of information unless it displays a currently valid OMB control number.

(e)(1) In the case of a collection of information not contained in a published current rule which has been approved by OMB and has a currently valid OMB control number, the agency shall:

(i) conduct the review established under § 1320.8, including the seeking of public comment under § 1320.8(d); and

(ii) after having made a reasonable effort to seek public comment, but no later than 60 days before the expiration date of the OMB control number for the currently approved collection of information, submit the collection of information for review and approval under this Part, which shall include an explanation of how the agency has used the information that it has collected.

(2) The agency may continue to conduct or sponsor the collection of information while the submission is pending at OMB.

(f) Prior to the expiration of OMB's approval of a collection of information, OMB may decide on its own initiative, after consultation with the agency, to review the collection of information. Such decisions will be made only when relevant circumstances have changed or the burden estimates provided by the agency at the time of initial submission were materially in error. Upon notification by OMB of its decision to review the collection of information, the agency shall submit it to OMB for review under this Part.

(g) For good cause, after consultation with the agency, OMB may stay the effectiveness of its prior approval of any collection of information that is not specifically required by agency rule; in such case, the agency shall cease conducting or sponsoring such collection of information while the submission is pending, and shall publish a notice in the **Federal Register** to that effect.

§ 1320.11 Clearance of collections of information in proposed rules.

Agencies shall submit collections of information contained in proposed rules published for public comment in the **Federal Register** in accordance with the following requirements:

(a) The agency shall include, in accordance with the requirements in § 1320.5(a)(1)(iv) and § 1320.8(d)(1) and (3), in the preamble to the Notice of Proposed Rulemaking a statement that the collections of information contained in the proposed rule, and identified as such, have been submitted to OMB for review under section 3507(d) of the Act. The notice shall direct comments to the Office of Information and Regulatory Affairs of OMB, Attention: Desk Officer for [name of agency].

(b) All such submissions shall be made to OMB not later than the day on which the Notice of Proposed Rulemaking is published in the **Federal Register**, in such form and in accordance with such procedures as OMB may direct. Such submissions shall include a copy of the proposed regulation and preamble.

(c) Within 60 days of publication of the proposed rule, but subject to paragraph (e) of this section, OMB may file public comments on collection of information provisions. The OMB comments shall be in the form of an OMB Notice of Action, which shall be sent to the Senior Official or agency head, or their designee, and which shall be made a part of the agency's rulemaking record.

(d) If an agency submission is not in compliance with paragraph (b) of this section, OMB may, subject to paragraph (e) of this section, disapprove the collection of information in the proposed rule within 60 days of receipt of the submission. If an agency fails to submit a collection of information subject to this section, OMB may, subject to paragraph (e) of this section, disapprove it at any time.

(e) OMB shall provide at least 30 days after receipt of the proposed collection of information before submitting its comments or making its decision, except as provided under § 1320.13.

(f) When the final rule is published in the **Federal Register**, the agency shall explain how any collection of information contained in the final rule responds to any comments received from OMB or the public. The agency shall include an identification and explanation of any modifications made in the rule, or explain why it rejected the comments. If requested by OMB, the agency shall include OMB's comments in the preamble to the final rule.

(g) If OMB has not filed public comments under paragraph (c) of this section, or has approved without conditions the collection of information contained in a rule before the final rule is published in the **Federal Register**, OMB may assign an OMB control number prior to publication of the final rule.

(h) On or before the date of publication of the final rule, the agency shall submit the final rule to OMB, unless it has been approved under paragraph (g) of this section (and not substantively or materially modified by the agency after approval). Not later than 60 days after publication, but subject to paragraph (e) of this section, OMB shall approve, instruct the agency to make a substantive or material change to, or disapprove, the collection of information contained in the final rule. Any such instruction to change or disapprove may be based on one or more of the following reasons, as determined by OMB:

(1) the agency has failed to comply with paragraph (b) of this section;

(2) the agency had substantially modified the collection of information contained in the final rule from that contained in the proposed rule without providing OMB with notice of the change and sufficient information to make a determination concerning the modified collection of information at least 60 days before publication of the final rule; or

(3) in cases in which OMB had filed public comments under paragraph (c) of this section, the agency's response to such comments was unreasonable, and the collection of information is unnecessary for the proper performance of the agency's functions.

(i) After making such decision to approve, to instruct the agency to make a substantive or material change to, or disapprove, the collection of information, OMB shall so notify the agency. If OMB approves the collection of information or if it has not acted upon the submission within the time limits of this section, the agency may request, and OMB shall assign an OMB control number. If OMB disapproves or instructs the agency to make substantive or material change to the collection of information, it shall make the reasons for its decision publicly available.

(j) OMB shall not approve any collection of information under this section for a period longer than three years. Approval of such collection of information will be for the full three-year period, unless OMB determines that there are special circumstances requiring approval for a shorter period.

(k) After receipt of notification of OMB's approval, instruction to make a substantive or material change to, disapproval of a collection of information, or failure to act, the agency shall publish a notice in the **Federal Register** to inform the public of OMB's decision.

(l) As provided in § 1320.5(b) and § 1320.6(a), an agency may not conduct or sponsor a collection of information unless the collection of information displays a currently valid OMB control number and the agency informs potential persons who are to respond to the collection of information that such persons are not required to respond to the collection of information unless it displays a currently valid OMB control number.

§ 1320.12 Clearance of collections of information in current rules.

Agencies shall submit collections of information contained in current rules that were published as final rules in the **Federal Register** in accordance with the following procedures:

(a) In the case of a collection of information contained in a published current rule which has been approved by OMB and has a currently valid OMB control number, the agency shall:

(1) conduct the review established under § 1320.8, including the seeking of public comment under § 1320.8(d); and

(2) after having made a reasonable effort to seek public comment, but no later than 60 days before the expiration date of the OMB control number for the currently approved collection of information, submit the collection of information for review and approval under this Part, which shall include an explanation of how the agency has used the information that it has collected.

(b)(1) In the case of a collection of information contained in a published current rule that was not required to be submitted for OMB review under the Paperwork Reduction Act at the time the collection of information was made part of the rule, but which collection of information is now subject to the Act and this Part, the agency shall:

(i) conduct the review established under § 1320.8, including the seeking of public comment under § 1320.(8)(d); and

(ii) after having made a reasonable effort to seek public comment, submit the collection of information for review and approval under this Part, which shall include an explanation of how the agency has used the information that it has collected.

(2) The agency may continue to conduct or sponsor the collection of information while the submission is pending at OMB. In the case of a collection of information not previously approved, approval shall be granted for such period, which shall not exceed 60 days, unless extended by the Director for an additional 60 days, and an OMB control number assigned. Upon assignment of the OMB control number, and in accordance with § 1320.3(f) and § 1320.5(b), the agency shall display the number and inform the potential persons who are to respond to the collection of information that such persons are not required to respond to the collection of information unless it displays a currently valid OMB control number.

(c) On or before the day of submission to OMB under paragraphs (a) or (b) of this section, the agency shall, in accordance with the requirements set forth in § 1320.5(a)(1)(iv), forward a notice to the **Federal Register** stating that OMB review is being sought. The notice shall direct requests for copies of the collection of information and supporting documentation to the agency, and shall request that comments be submitted to OMB within 30 days of the notice's publication. The notice shall direct comments to the Office of Information and Regulatory Affairs of OMB, Attention: Desk Officer for [name of agency]. A copy of the notice submitted to the **Federal Register**, together with the date of expected publication, shall be included in the agency's submission to OMB.

(d) Within 60 days after receipt of the collection of information or publication of the notice under paragraph (c) of this section, whichever is later, OMB shall notify the agency involved of its decision to approve, to instruct the agency to make a substantive or material change to, or to disapprove, the collection of information, and shall make such decision publicly available. OMB shall provide at least 30 days for public comment after receipt of the proposed collection of information before making its decision, except as provided under § 1320.13.

(e)(1) Upon approval of a collection of information, OMB shall assign an OMB control number and an expiration date. OMB shall not approve any collection of information for a period longer than three years. Approval of any collection of information submitted under this section will be for the full three-year period, unless OMB determines that there are special circumstances requiring approval for a shorter period.

(2) If OMB fails to notify the agency of its approval, instruction to make substantive or material change, or disapproval within the 60-day period, the agency may request, and OMB shall

assign without further delay, an OMB control number that shall be valid for not more than one year.

(3) As provided in § 1320.5(b) and § 1320.6(a), an agency may not conduct or sponsor a collection of information unless the collection of information displays a currently valid OMB control number and the agency informs potential persons who are to respond to the collection of information that such persons are not required to respond to the collection of information unless it displays a currently valid OMB control number.

(f)(1) If OMB disapproves a collection of information contained in an existing rule, or instructs the agency to make a substantive or material change to a collection of information contained in an existing rule, OMB shall:

(i) publish an explanation thereof in the **Federal Register**; and

(ii) instruct the agency to undertake a rulemaking within a reasonable time limited to consideration of changes to the collection of information contained in the rule and thereafter to submit the collection of information for approval or disapproval under § 1320.10 or § 1320.11, as appropriate; and

(iii) extend the existing approval of the collection of information (including an interim approval granted under paragraph (b) of this section) for the duration of the period required for consideration of proposed changes, including that required for OMB approval or disapproval of the collection of information under § 1320.10 or § 1320.11, as appropriate.

(2) Thereafter, the agency shall, within a reasonable period of time not to exceed 120 days, undertake such procedures as are necessary in compliance with the Administrative Procedure Act and other applicable law to amend or rescind the collection of information, and shall notify the public through the **Federal Register**. Such notice shall identify the proposed changes in the collections of information and shall solicit public comment on retention, change, or rescission of such collections of information. If the agency employs notice and comment rulemaking procedures for amendment or rescission of the collection of information, publication of the above in the **Federal Register** and submission to OMB shall initiate OMB clearance procedures under section 3507(d) of the Act and § 1320.11. All procedures shall be completed within a reasonable period of time to be determined by OMB in consultation with the agency.

(g) OMB may disapprove, in whole or in part, any collection of information subject to the procedures of this section, if the agency:

(1) has refused within a reasonable time to comply with an OMB instruction to submit the collection of information for review;

(2) has refused within a reasonable time to initiate procedures to change the collection of information; or

(3) has refused within a reasonable time to publish a final rule continuing the collection of information, with such changes as may be appropriate, or otherwise complete the procedures for amendment or rescission of the collection of information.

(h)(1) Upon disapproval by OMB of a collection of information subject to this section, except as provided in paragraph (f)(1)(iii) of this section, the OMB control number assigned to such collection of information shall immediately expire, and no agency shall conduct or sponsor such collection of information. Any such disapproval shall constitute disapproval of the collection of information contained in the Notice of Proposed Rulemaking or other submissions, and also of the preexisting information collection instruments directed at the same collection of information and therefore constituting essentially the same collection of information.

(2) The failure to display a currently valid OMB control number for a collection of information contained in a current rule, or the failure to inform the potential persons who are to respond to the collection of information that such persons are not required to respond to the collection of information unless it displays a currently valid OMB control number, does not, as a legal matter, rescind or amend the rule; however, such absence will alert the public that either the agency has failed to comply with applicable legal requirements for the collection of information or the collection of information has been disapproved, and that therefore the portion of the rule containing the collection of information has no legal force and effect and the public protection provisions of 44 U.S.C. 3512 apply.

(i) Prior to the expiration of OMB's approval of a collection of information in a current rule, OMB may decide on its own initiative, after consultation with the agency, to review the collection of information. Such decisions will be made only when relevant circumstances have changed or the burden estimates provided by the agency at the time of initial submission were materially in error. Upon notification by OMB of its decision to review the collection of information, the agency shall submit it to OMB for review under this Part.

§ 1320.13 Emergency processing.

An agency head or the Senior Official, or their designee, may request OMB to authorize emergency processing of submissions of collections of information.

(a) Any such request shall be accompanied by a written determination that:

(1) The collection of information:

(i) Is needed prior to the expiration of time periods established under this Part; and

(ii) Is essential to the mission of the agency; and

(2) The agency cannot reasonably comply with the normal clearance procedures under this Part because:

(i) Public harm is reasonably likely to result if normal clearance procedures are followed;

(ii) An unanticipated event has occurred; or

(iii) The use of normal clearance procedures is reasonably likely to prevent or disrupt the collection of information or is reasonably likely to cause a statutory or court ordered deadline to be missed.

(b) The agency shall state the time period within which OMB should approve or disapprove the collection of information.

(c) The agency shall submit information indicating that it has taken all practicable steps to consult with interested agencies and members of the public in order to minimize the burden of the collection of information.

(d) The agency shall set forth in the **Federal Register** notice prescribed by § 1320.5(a)(1)(iv), unless waived or modified under this section, a statement that it is requesting emergency processing, and the time period stated under paragraph (b) of this section.

(e) OMB shall approve or disapprove each such submission within the time period stated under paragraph (b) of this section, provided that such time period is consistent with the purposes of this Act.

(f) If OMB approves the collection of information, it shall assign a control number valid for a maximum of 90 days after receipt of the agency submission.

§ 1320.14 Public access.

(a) In order to enable the public to participate in and provide comments during the clearance process, OMB will ordinarily make its paperwork docket files available for public inspection during normal business hours. Notwithstanding other provisions of this Part, and to the extent permitted by law,

requirements to publish public notices or to provide materials to the public may be modified or waived by the Director to the extent that such public participation in the approval process would defeat the purpose of the collection of information; jeopardize the confidentiality of proprietary, trade secret, or other confidential information; violate State or Federal law; or substantially interfere with an agency's ability to perform its statutory obligations.

(b) Agencies shall provide copies of the material submitted to OMB for review promptly upon request by any person.

(c) Any person may request OMB to review any collection of information conducted by or for an agency to determine, if, under this Act and this Part, a person shall maintain, provide, or disclose the information to or for the agency. Unless the request is frivolous, OMB shall, in coordination with the agency responsible for the collection of information:

(1) Respond to the request within 60 days after receiving the request, unless such period is extended by OMB to a specified date and the person making the request is given notice of such extension; and

(2) Take appropriate remedial action, if necessary.

§ 1320.15 Independent regulatory agency override authority.

(a) An independent regulatory agency which is administered by two or more members of a commission, board, or similar body, may by majority vote void:

(1) Any disapproval, instruction to such agency to make material or substantive change to, or stay of the effectiveness of OMB approval of, any collection of information of such agency; or

(2) An exercise of authority under § 1320.10(g) concerning such agency.

(b) The agency shall certify each vote to void such OMB action to OMB, and explain the reasons for such vote. OMB shall without further delay assign an OMB control number to such collection of information, valid for the length of time requested by the agency, up to three years, to any collection of information as to which this vote is exercised. No override shall become effective until the independent regulatory agency, as provided in § 1320.5(b) and § 1320.6(2), has displayed the OMB control number and informed the potential persons who are to respond to the collection of information that such persons are not required to respond to the collection of information unless it displays a currently valid OMB control number.

§ 1320.16 Delegation of approval authority.

(a) OMB may, after complying with the notice and comment procedures of the Administrative Procedure Act, delegate OMB review of some or all of an agency's collections of information to the Senior Official, or to the agency head with respect to those components of the agency for which he or she has not delegated authority.

(b) No delegation of review authority shall be made unless the agency demonstrates to OMB that the Senior Official or agency head to whom the authority would be delegate:

(1) Is sufficiently independent of program responsibility to evaluate fairly whether proposed collections of information should be approved;

(2) Has sufficient resources to carry out this responsibility effectively; and

(3) Has established an agency review process that demonstrates the prompt, efficient, and effective performance of collection of information review responsibilities.

(c) OMB may limit, condition, or rescind, in whole or in part, at any time, such delegations of authority, and reserves the right to review any individual collection of information, or part thereof, conducted or sponsored by an agency, at any time.

(d) Subject to the provisions of this Part, and in accordance with the terms and conditions of each delegation as specified in Appendix A to this part, OMB delegates review and approval authority to the following agencies:

(1) Board of Governors of the Federal Reserve System; and

(2) Managing Director of the Federal Communications Commission.

§ 1320.17 Information collection budget.

Each agency's Senior Official, or agency head in the case of any agency for which the agency head has not delegated responsibility under the Act for any component of the agency to the Senior Official, shall develop and submit to OMB, in such form, at such time, and in accordance with such procedures as OMB may prescribe, an annual comprehensive budget for all collections of information from the public to be conducted in the succeeding twelve months. For good cause, OMB may exempt any agency from this requirement.

§ 1320.18 Other authority.

(a) OMB shall determine whether any collection of information or other matter is within the scope of the Act, or this Part.

(b) In appropriate cases, after consultation with the agency, OMB may initiate a rulemaking proceeding to determine whether an agency's collection of information is consistent with statutory standards. Such proceedings shall be in accordance with the informal rulemaking procedures of the Administrative Procedure Act.

(c) Each agency is responsible for complying with the information policies, principles, standards, and guidelines prescribed by OMB under this Act.

(d) To the extent permitted by law, OMB may waive any requirements contained in this Part.

(e) Nothing in this Part shall be interpreted to limit the authority of OMB under this Act, or any other law. Nothing in this Part or this Act shall be interpreted as increasing or decreasing the authority of OMB with respect to the substantive policies and programs of the agencies.

Appendix A—Agencies with Delegated Review and Approval Authority

1. The Board of Governors of the Federal Reserve System

(a) Authority to review and approve collection of information requests, collection of information requirements, and collections of information in current rules is delegated to the Board of Governors of the Federal Reserve System.

(1) This delegation does not include review and approval authority over any new collection of information or any modification to an existing collection of information that:

(i) Is proposed to be collected as a result of a requirement or other mandate of the Federal Financial Institutions Examination Council, or other Federal executive branch entities with authority to require the Board to conduct or sponsor a collection of information.

(ii) Is objected to by another Federal agency on the grounds that agency requires information currently collected by the Board, that the currently collected information is being deleted from the collection, and the deletion will have a serious adverse impact on the agency's program, provided that such objection is certified to OMB by the head of the Federal agency involved, with a copy to the Board, before the end of the comment period specified by the Board on the **Federal Register** notices specified in paragraph (1)(3)(i) of this section 1.

(iii) Would cause the burden of the information collections conducted or sponsored by the Board to exceed by the end of the fiscal year the Information Collection Budget allowance set by the Board and OMB for the fiscal year-end.

(2) The Board may ask that OMB review and approve collections of information covered by this delegation.

(3) In exercising delegated authority, the Board will:

(i) Provide the public, to the extent possible and appropriate, with reasonable

opportunity to comment on collections of information under review prior to taking final action approving the collection. Reasonable opportunity for public comment will include publishing a notice in the **Federal Register** informing the public of the proposed collection of information, announcing the beginning of a 60-day public comment period, and the availability of copies of the ''clearance package,'' to provide the public with the opportunity to comment. Such **Federal Register** notices shall also advise the public that they may also send a copy of their comments to the Federal Reserve Board and to the OMB/OIRA Desk Officer.

(A) Should the Board determine that a new collection of information or a change in an existing collection must be instituted quickly and that public participation in the approval process would defeat the purpose of the collection or substantially interfere with the Board's ability to perform its statutory obligation, the Board may temporarily approve of the collection of information for a period not to exceed 90 days without providing opportunity for public comment.

(B) At the earliest practical date after approving the temporary extension to the collection of information, the Board will publish a **Federal Register** notice informing the public of its approval of the collection of information and indicating why immediate action was necessary. In such cases, the Board will conduct a normal delegated review and publish a notice in the **Federal Register** soliciting public comment on the intention to extend the collection of information for a period not to exceed three years.

(ii) Provide the OMB/OIRA Desk Officer for the Federal Reserve Board with a copy of the Board's **Federal Register** notice not later than the day the Board files the notice with the Office of the Federal Register.

(iii) Assure that approved collections of information are reviewed not less frequently than once every three years, and that such reviews are normally conducted before the expiration date of the prior approval. Where the review has not been completed prior to the expiration date, the Board may extend the report, for up to three months, without public notice in order to complete the review and consequent revisions, if any. There may also be other circumstances in which the Board determines that a three-month extension without public notice is appropriate.

(iv) Take every reasonable step to conduct the review established under 5 CFR 1320.8, including the seeking of public comment under 5 CFR 1320.8(d). In determining whether to approve a collection of information, the Board will consider all comments received from the public and other agencies. The Board will not approve a collection of information that it determines does not satisfy the guidelines set forth in 5 CFR 1320.5(d)(2), unless it determines that departure from these guidelines is necessary to satisfy statutory requirements or other substantial need.

(v)(A) Assure that each approved collection of information displays, as required by 5 CFR 1320.6, a currently valid OMB control number and the fact that a person is not required to respond to a collection of information unless it displays a currently valid OMB control number.

(B) Assure that all collections of information, except those contained in regulations, display the expiration date of the approval, or, in case the expiration date has been omitted, explain the decision that it would not be appropriate, under 5 CFR 1320.5(a)(1)(iii)(C), for a proposed collection of information to display an expiration date.

(C) Assure that each collection of information, as required by 5 CFR 1320.8(b)(3), informs and provides fair notice to the potential respondents of why the information is being collected; the way in which such information is to be used; the estimated burden; whether responses are voluntary, required to obtain or retain a benefit, or mandatory; the confidentiality to be provided; and the fact that an agency may not conduct or sponsor, and the respondent is not required to respond to, a collection of information unless it displays a currently valid OMB control number.

(vi) Assure that each approved collection of information, together with a completed form OMB 83–I, a supporting statement, a copy of each comment received from the public and other agencies in response to the Board's **Federal Register** notice or a summary of these comments, the certification required by 5 CFR 1320.9, and a certification that the Board has approved of the collection of information in accordance with the provisions of this delegation is transmitted to OMB for incorporation into OMB's public docket files. Such transmittal shall be made as soon as practical after the Board has taken final action approving the collection. However, no collection of information may be instituted until the Board has delivered this transmittal to OMB.

(b) OMB will:

(1) Provide the Board in advance with a block of control numbers which the Board will assign in sequential order to and display on, new collections of information.

(2) Provide a written notice of action to the Board indicating that the Board approvals of collections of information that have been received by OMB and incorporated into OMB's public docket files and an inventory of currently approved collections of information.

(3) Review any collection of information referred by the Board in accordance with the provisions of section 1(a)(2) of this Appendix.

(c) OMB may review the Board's paperwork review process under the delegation. The Board will cooperate in carrying out such a review. The Board will respond to any recommendations resulting from such review and, if it finds the recommendations to be appropriate, will either accept the recommendations or propose an alternative approach to achieve the intended purpose.

(d) This delegation may, as provided by 5 CFR 1320.16(c), be limited, conditioned, or rescinded, in whole or in part at any time. OMB will exercise this authority only in unusual circumstances and, in those rare instances, will do so, subject to the provisions of 5 CFR 1320.10(f) and 1320.10(g), prior to the expiration of the time period set for public comment in the Board's **Federal Register** notices and generally only if:

(1) Prior to the commencement of a Board review (e.g., during the review for the Information Collection Budget). OMB has notified the Board that it intends to review a specific new proposal for the collection of information or the continued use (with or without modification) of an existing collection;

(2) There is substantial public objection to a proposed information collection: or

(3) OMB determines that a substantially inadequate and inappropriate lead time has been provided between the final announcement date of the proposed requirement and the first date when the information is to be submitted or disclosed. When OMB exercises this authority it will consider that the period of its review began the date that OMB received the **Federal Register** notice provided for in section 1(a)(3)(i) of this Appendix.

(e) Where OMB conducts a review of a Board information collection proposal under section 1(a)(1), 1(a)(2), or 1(d) of this Appendix, the provisions of 5 CFR 1320.13 continue to apply.

2. The Managing Director of the Federal Communications Commission

(a) Authority to review and approve currently valid (OMB-approved) collections of information, including collections of information contained in existing rules, that have a total annual burden of 5,000 hours or less and a burden of less than 500 hours per respondent is delegated to the Managing Director of the Federal Communications Commission.

(1) This delegation does not include review and approval authority over any new collection of information, any collections whose approval has lapsed, any substantive or material modification to existing collections, any reauthorization of information collections employing statistical methods, or any information collections that exceed a total annual burden of 5,000 hours or an estimated burden of 500 hours per respondent.

(2) The Managing Director may ask that OMB review and approve collections of information covered by the delegation.

(3) In exercising delegated authority, the Managing Director will:

(i) Provide the public, to the extent possible and appropriate, with reasonable opportunity to comment on collections of information under review prior to taking final action on reauthorizing an existing collection. Reasonable opportunity for public comment will include publishing a notice in the **Federal Register** and an FCC Public Notice informing the public that a collection of information is being extended and announcing the beginning of a 60-day comment period, notifying the public of the ''intent to extend an information collection,'' and providing the public with the opportunity to comment on the need for the information, its practicality, the accuracy of the agency's burden estimate, and on ways to minimize burden, including the use of automated, electronic, mechanical, or other

technological collection techniques or other forms of information technology, e.g., permitting electronic submission of responses. Such notices shall advise the public that they may also send a copy of their comments to the OMB/Office of Information and Regulatory Affairs desk officer for the Commission.

(A) Should the Managing Director determine that a collection of information that falls within the scope of this delegation must be reauthorized quickly and that public participation in the reauthorization process interferes with the Commission's ability to perform its statutory obligation, the Managing Director may temporarily reauthorize the extension of an information collection, for a period not to exceed 90 days, without providing opportunity for public comment.

(B) At the earliest practical date after granting this temporary extension to an information collection, the Managing Director will conduct a normal delegated review and publish a **Federal Register** notice soliciting public comment on its intention to extend the collection of information for a period not to exceed three years.

(ii) Assure that approved collections of information are reviewed not less frequently than once every three years and that such reviews are conducted before the expiration date of the prior approval. When the review is not completed prior to the expiration date, the Managing Director will submit the lapsed information collection to OMB for review and reauthorization.

(iii) Assure that each reauthorized collection of information displays an OMB control number and, except for those contained in regulations or specifically designated by OMB, displays the expiration date of the approval.

(iv) Inform and provide fair notice to the potential respondents, as required by 5 CFR 1320.8(b)(3), of why the information is being collected; the way in which such information is to be used; the estimated burden; whether responses are voluntary, required, required to obtain or retain a benefit, or mandatory; the confidentiality to be provided; and the fact that an agency may not conduct or sponsor, and the respondent is not required to respond to, a collection of information unless it displays a currently valid OMB control number.

(v) Transmit to OMB for incorporation into OMB's public docket files, a report of delegated approval certifying that the Managing Director has reauthorized each collection of information in accordance with the provisions of this delegation. The Managing Director shall also make the certification required by 5 CFR 1320.9, e.g., that the approved collection of information reduces to the extent practicable and appropriate, the burden on respondents, including, for small business, local government, and other small entities, the use of the techniques outlined in the Regulatory Flexibility Act. Such transmittals shall be made no later than 15 days after the Managing Director has taken final action reauthorizing the extension of an information collection.

(vi) Ensure that the personnel in the Commission's functional bureaus and offices responsible for managing information collections receive periodic training on procedures related to meeting the requirements of this part and the Act.

(b) OMB will:

(1) Provide notice to the Commission acknowledging receipt of the report of delegated approval and its incorporation into OMB's public docket files and inventory of currently approved collections of information.

(2) Act upon any request by the Commission to review a collection of information referred by the Commission in accordance with the provisions of section 2(a)(2) of this Appendix.

(3) Periodically assess, at its discretion, the Commission's paperwork review process as administered under the delegation. The Managing Director will cooperate in carrying out such an assessment. The Managing Director will respond to any recommendations resulting from such a review and, if it finds the recommendations to be appropriate, will either accept the recommendation or propose an alternative approach to achieve the intended purpose.

(c) This delegation may, as provided by 5 CFR 1320.16(c), be limited, conditioned, or rescinded, in whole or in part at any time. OMB will exercise this authority only in unusual circumstances.

[FR Doc. 95–21235 Filed 8–28–95; 8:45 am]

BILLING CODE 3110–01–P

federal register

Tuesday
August 29, 1995

Part IV

Department of Transportation

Federal Aviation Administration

14 CFR Part 25

Revised Structural Loads Requirements for Transport Category Airplanes; Proposed Rule

Availability of Proposed Advisory Circular 25.335–1; Notice

DEPARTMENT OF TRANSPORTATION

Federal Aviation Administration

14 CFR Part 25

[Docket No. 28312; Notice No. 95–14]

RIN 2120–AF70

Revised Structural Loads Requirements for Transport Category Airplanes

AGENCY: Federal Aviation Administration, DOT.

ACTION: Notice of proposed rulemaking.

SUMMARY: This notice proposes to revise the structural loads design requirements of the Federal Aviation Regulations (FAR) for transport category airplanes by incorporating changes developed in cooperation with the Joint Aviation Authorities (JAA) of Europe and the Aviation Rulemaking Advisory Committee (ARAC). This action is necessary because differences between current U.S. and European requirements impose unnecessary costs on airplane manufacturers. This action would make some of the requirements more rational and eliminate differences between current U.S. and European requirements that impose unnecessary costs on airplane manufacturers. These proposals are intended to achieve common requirements and language between the requirements of the U.S. regulations and the Joint Aviation Requirements (JAR) of Europe while maintaining at least the level of safety provided by the current regulations.

DATES: Comments must be received on or before November 27, 1995.

ADDRESSES: Comments on this notice may be mailed in triplicate to: Federal Aviation Administration (FAA), Office of the Chief Counsel, Attention: Rules Docket (AGC–200), Docket No. 28312, 800 Independence Avenue SW., Washington, DC 20591; or delivered in triplicate to: Room 915G, 800 Independence Avenue SW., Washington, DC 20591. Comments delivered must be marked Docket No. 28312. Comments may be examined in Room 915G weekdays, except Federal holidays, between 8:30 a.m. and 5 p.m. In addition, the FAA is maintaining an information docket of comments in the Transport Airplane Directorate (ANM–100), FAA, 1601 Lind Avenue SW., Renton, WA 98055–4056. Comments in the information docket may be examined weekdays, except Federal holidays, between 7:30 a.m. and 4 p.m.

FOR FURTHER INFORMATION CONTACT: James Haynes, Airframe and Propulsion Branch, ANM–112, Transport Airplane Directorate, Aircraft Certification Service, FAA, 1601 Lind Avenue SW., Renton, WA 98055–4056; telephone (206) 227–2131.

SUPPLEMENTARY INFORMATION

Comments Invited

Interested persons are invited to participate in this proposed rulemaking by submitting such written data, views, or arguments as they may desire. Comments relating to any environmental, energy, or economic impact that might result from adopting the proposals contained in this notice are invited. Substantive comments should be accompanied by cost estimates. Commenters should identify the regulatory docket or notice number and submit comments in triplicate to the Rules Docket address above. All comments received on or before the closing date for comments will be considered by the Administrator before taking action on this proposed rulemaking. The proposals contained in this notice may be changed in light of comments received. All comments received will be available in the Rules Docket, both before and after the comment period closing date, for examination by interested persons. A report summarizing each substantive public contact with FAA personnel concerning this rulemaking will be filed in the docket. Persons wishing the FAA to acknowledge receipt of their comments must submit with those comments a self-addressed, stamped postcard on which the following statement is made: ''Comments to Docket No. 28312.'' The postcard will be date/time stamped and returned to the commenter.

Availability of NPRM

Any person may obtain a copy of this notice by submitting a request to the Federal Aviation Administration, Office of Public Affairs, Attention: Public Inquiry Center, APA–230, 800 Independence Avenue SW., Washington, DC 20591; or by calling (202) 267–3484. Communications must identify the notice number of this NPRM. Persons interested in being placed on a mailing list for future rulemaking documents should also request a copy of Advisory Circular No. 11–2A, Notice of Proposed Rulemaking Distribution System, which describes the application procedure.

Background

The manufacturing, marketing and certification of transport airplanes is increasingly an international endeavor. In order for U.S. manufacturers to export transport airplanes to other countries the airplane must be designed to comply, not only with the U.S. airworthiness requirements for transport airplanes (14 CFR part 25), but also with the transport airworthiness requirements of the countries to which the airplane is to be exported.

The European countries have developed a common airworthiness code for transport category airplanes that is administered by the JAA of Europe. This code is the result of a European effort to harmonize the various airworthiness codes of the European countries and is called the Joint Aviation Requirements (JAR)–25. It was developed in a format similar to 14 CFR part 25. Many other countries have airworthiness codes that are aligned closely to part 25 or to JAR–25, or they use these codes directly for their own certification purposes.

Although JAR–25 is very similar to part 25, there are differences in methodologies and criteria that often result in the need to address the same design objective with more than one kind of analysis or test in order to satisfy both part 25 and JAR airworthiness codes. These differences result in additional costs to the transport airplane manufacturers and additional costs to the U.S. and foreign authorities that must continue to monitor compliance with a variety of different airworthiness codes.

In 1988, the FAA, in cooperation with the JAA and other organizations representing the U.S. and European aerospace industries, began a process to harmonize the airworthiness requirements of the United States with the airworthiness requirements of the European authorities. The objective was to achieve common requirements for the certification of transport category airplanes without a substantive change in the level of safety provided by the regulations. Other airworthiness authorities such as Transport Canada have also participated in this process.

In 1992, the harmonization effort was undertaken by the Aviation Rulemaking Advisory Committee (ARAC). By notice in the **Federal Register** (58 FR 13819, March 15, 1993), the FAA chartered a working group of industry and government structural loads specialists from Europe, the United States, and Canada. The harmonization effort has now progressed to a point where some specific proposals have been developed by the working group for the structural loads requirements of Subpart C of part 25, ''Structure,'' and these proposals have been recommended to FAA by letter dated February 2, 1995. This notice contains some of the proposals necessary to achieve harmonization for

the loads requirements of part 25. The ARAC working group is also considering other changes to the loads requirements that may become proposals for future rulemaking.

Certain technical differences in the part 25 and JAR–25 structural requirements have resulted in extensive revision or redevelopment of the criteria and methodology for specific requirements and some of those issues will be made the subject of separate proposals. In addition, some standards were already in the process of revision and improvement by the FAA when the harmonization effort was initiated. These changes have also been subjected to the harmonization process and will be proposed in separate notices.

This notice provides many of the proposals necessary for harmonizing the loads requirements of Subpart C of part 25. Many of the sections of part 25 that would be changed by this notice are also affected by an earlier related proposal ''Revised Discrete Gust Load Design Requirements,'' Notice No. 94–29 (59 FR 47756, September 15, 1994), and the proposals presented here were developed under the presumption that proposal would be adopted. The final rule text of Notice No. 94–29, if adopted, will be taken into account in the drafting of the final rule resulting from the proposals presented in this NPRM.

A comparison of the proposals in this NPRM with the current version of JAR–25 may not show identical wording between the proposed part 25 sections and the equivalent JAR–25 sections since, in many cases, proposals are being made to change both the FAR and the JAR versions at the same time. However, the proposals in this notice, when taken in context with the Notices of Proposed Amendment (NPA) currently proposed by the JAA and FAA Notice No. 94–29, will harmonize the bulk of the requirements of Subpart C of part 25 and Subpart C of JAR–25.

Discussion

The pitching maneuver resulting from the maximum deflection of the control surface is specified in § 25.331(c)(1). This maneuver is commonly known as the ''unchecked'' pitching maneuver since it is not arrested by an opposite control input. Differences in the terminology used in part 25 and JAR–25 have led to differences in the way the rule has been applied. The FAA has interpreted this as a maneuver that applies to the entire airplane and that must be carried out until the normal load factor is reached. Consequently, this maneuver could result in high pitching rates that may be important in determining gyroscopic loads resulting from rotating machinery such as propellers and large fans. The equivalent JAR paragraph, however, allows the maneuver to be terminated when the maximum tail load is reached, and the JAR rule has been interpreted as primarily applying to the determination of empennage loads.

It is proposed that § 25.331(c)(1) be revised to specifically allow the ''unchecked maneuver'' to be terminated when the tail load reaches a maximum. The maneuver and resulting loads would still be considered to apply to the entire airplane but, for the purposes of determining these airplane loads, the maneuver could be terminated when the maximum tail load is reached. However, for the purpose of determining the pitching rate used in calculating the gyroscopic loads of § 25.371, the rule would require the maneuver to be carried out until the maximum limit load factor on the airplane is reached. In this regard, another revision to § 25.371 is proposed as discussed below. These changes would have no impact on safe flight of the airplane, but would reduce the extent of calculations needed for determining the critical design loads.

Section 25.335(a)(2) would be revised by replacing the 43 knot speed margin between the design speed for maximum gust intensity (V_B) and the design cruising speed (V_C) with a variable margin based on the variation of gust speeds with altitude. This new margin would be approximately equal to 43 knots at sea level and would vary proportionally to the gust velocities specified in § 25.34(a)(4) of Notice No. 94–29, Revised Discrete Gust Load Design Requirements (59 FR 47756 at 47760, September 16, 1994). An alternative margin established by a rational investigation, provided for in the current rule, would no longer be allowed since the proposed criteria are considered to provide the minimum acceptable margin between V_B and V_C. Since this proposal provides specific speed margins equivalent to those currently accepted by rational analyses, there would be no impact on safety.

Section § 25.335(b)(2) would be revised by increasing the minimum speed margin for atmospheric variations from 0.05 Mach to 0.07 Mach. Studies by industry have shown that for a conventional aircraft, a margin of approximately 0.07 Mach is necessary to account for atmospheric disturbances. However, it is recognized that some aircraft may have aerodynamic characteristics that would allow a lower margin, provided a rational analysis of the effects of atmospheric disturbances is carried out for the airplane. The ARAC believes the 0.07 Mach margin to be the minimum safe margin unless a rational analysis of the response of the airplane to atmospheric disturbances justifies a lower value. The change is intended to provide a harmonized requirement since a parallel change is being proposed by the JAA in NPA 25C–260. This proposal would allow the minimum margin to be reduced to the level of the current rule (0.05 Mach) if a rational analysis warrants such reduction. Since margins as low as the current margins would still be allowed, if justified, this proposal would not have a significant impact on design. In addition to the amendments to part 25 proposed in this notice, an advisory circular (AC 25.335–1) is being proposed to ensure that the harmonized standards would be interpreted and applied consistently. This proposed AC would provide a means of demonstrating compliance with the provisions of part 25 related to the minimum speed margin between design cruise speed and design dive speed for transport category airplanes. Public comments concerning the proposed AC are invited by separate notice published elsewhere in this issue of the **Federal Register**.

Section 25.345(d) would be revised to specify more clearly the design conditions for wing flaps and similar high lift devices in the landing configuration. It would be revised to make it clear that this is a maneuvering flight condition and not an actual ground landing condition.

In Notice No. 94–29, Revised Discrete Gust Load Design Requirements (59 FR 47756 at 47760, September 16, 1994), the FAA proposed to remove the gust conditions from the yawing conditions specified in § 25.351. This notice proposes to further revise § 25.351, by allowing the 300-pound pilot effort load to be reduced linearly between the design maneuvering speed (V_A) and V_C to 200 pounds at V_C. The current § 25.351 requires 300 pounds to be withstood up to the design dive speed, V_D. Further clarifying changes are also proposed to eliminate confusion concerning the specific design cases required by this section. These proposals would make § 25.351 of part 25 equivalent to § 25.351 of JAR–25 as proposed by the NPA 25C–260. The change would have little effect on most transport category airplanes since they usually have devices that limit the effect of rudder control force on surface deflection. The control pedals and affected systems would still be designed to comply with the 300 pound condition at V_A. In any case, the requirement to

withstand 300 pounds at all speeds up to the maximum design dive speed is considered by the ARAC to be excessive and unrealistic for modern transport category airplanes. As reflected in the NPRM, the FAA agrees.

Seciton 25.363 concerning side loads on engine mounts would be revised to clarify that it applies to auxiliary power units as well as engines. This clarifying proposal would have no impact on safety because it is consistent with current design practice for transport category airplanes.

Section 25.371 concerning gyroscopic loads would be revised as noted above in the discussion of the pitching maneuver of § 25.331(c)(1). In addition, this notice proposes to require that the highest pitching rates derived from all rational flight and landing conditions be used to determine the gyroscopic loads. This proposal would provide some improvement in safety since the pitching rates required for calculating the gyroscopic loads would include landing conditions. Furthermore, to harmonize with the current § 25.371 of JAR–25, this section would be revised to clarify that it applies to auxiliary power units as well as engines.

Although § 25.415 ''Ground gust conditions'' is currently identical in part 25 and JAR–25, this notice proposes to increase the ground gust velocity from the current maximum of 88 feet per second (about 52 knots) to 65 knots. JAR–25 currently has a requirement (§ 25.519) that covers ground loads during jacking and tie-down. Section 25.519 of JAR–25 establishes a 65-knot wind speed for ground gusts during jacking and tie-down and specifically requires these gusts to be applied to the control surfaces, rendering the current § 25.415 of part 25 and JAR–25 ''Ground gust conditions'' inconsistent with § 25.519 of JAR–25 and inconsequential for design. The FAA has a new requirement similar to § 25.519 of JAR–25. This requirement, § 25.519 (59 FR 22100, April 28, 1994), is equivalent to the § 25.519 of JAR–25 except that the control surfaces are not specified in § 25.519. The FAA has determined that control surfaces should continue to be addressed only under § 25.415 so this section is being revised to achieve the same effect as the § 25.519 of JAR–25 by incorporating the 65-knot wind speed into § 25.415. The formula presented in § 25.415 would also be simplified in that the 65-knot wind speed would be contained within the numerical constant (14.3) for the formula used to calculate the ground gust load. These changes are made for the purpose of clarity and harmonization and would have not impact on safety.

This notice proposes to revise and reorganize §§ 25.473, 25.479 and 25.481 and 25.485 in order to clarify the requirement that structural dynamic effects in the landing conditions be considered and to clarify which requirements are full airplane rational design conditions and which are static design loading cases. These proposals would provide identical language for these sections of part 25 and JAR–25. The requirement for consideration of dynamic landing conditions is currently expressed in § 25.473(e) of JAR–25 by specific language, and in § 25.305(c) of the FAR by general language. The change proposed in this notice would make it a specific requirement in part 25.

This notice proposes to add a new requirement in § 25.479 to consider lateral drift in the landing condition. The current JAR requirement (§ 25.479(c)(4)), which covers this subject, would be incorporated into paragraph (d)(2) of the proposed § 25.479. This is a rational airplane load requirement that would be in addition to the requirements of § 25.485 that include specified side loads on the landing gear. These proposed requirements would have no impact on safety since they are equivalent to existing requirements and are consistent with the current design practice for transport airplanes.

Although the language for § 25.483 of part 25 and § 25.483 of JAR–25 are currently identical, differences in interpretation have occurred. This notice proposes to clarify the language to define the requirement as a ''one gear'' landing condition instead of a ''one wheel'' condition in order to resolve confusion that arises in treating multi-wheeled landing gear units. The rule would be retitled ''One gear landing'' and the language in the rule would be revised to reflect this terminology. An identical change to JAR–25 will be proposed.

Section 25.491 would be revised to eliminate differences in interpretation and to clarify that it applies equally to takeoff, taxi and landing roll by changing the title to ''Taxi, takeoff and landing roll.'' In addition, the reference to § 25.235 would be eliminated and the language of § 25.235 would be incorporated directly into the rule.

The requirements concerning nose-gear steering are different between part 25 and JAR–25 in that § 25.499(e) of JAR–25 requires a factor of 1.33 on the maximum steering torque and also for the vertical ground reaction that is combined with the steering torque. This factor is applied in addition to the 1.5 safety factor normally applied to limit loads. Part 25 provides the same requirement without the additional 1.33 factor.There is merit in considering the maximum steering torque in combination with a ground reaction that is greater than the static one, however there is insufficient justification for an additional factor on the maximum steering torque. Therefore the rule would be revised to include a 1.33 factor for the static ground reaction. A related JAA proposal would remove the 1.33 factor from the maximum steering torque in § 25.499(e) of JAR–25, resulting in an identical requirement. This proposal would result in an increase in the level of safety provided by part 25.

Section 25.561(c) would be revised to be equivalent with § 25.561(c) of JAR–25. This would require the application of a 1.33 factor to the loads used to design the restraints of items of mass if the failure of those items could injure occupants in an emergency landing. This would also incorporate a provision that the 1.33 factor applies only to items of mass that are frequently removed during normal operation. This change would provide an increase in the level of safety provided by part 25.

Regulatory Evaluation Summary

Preliminary Regulatory Evaluation, Initial Regulatory Flexibility Determination, and Trade Impact Assessment

Proposed changes to Federal regulations must undergo several economic analyses. First, Executive Order 12866 directs that each Federal agency shall propose or adopt a regulation only upon a reasoned determination that the benefits of the intended regulation justify its costs. Second, the Regulatory Flexibility Act of 1980 requires agencies to analyze the economic effect of regulatory changes on small entities. Third, the Office of Management and Budget directs agencies to assess the effects of regulatory changes on international trade. In conducting these analyses, the FAA has determined that this rule: (1) Would generate benefits that justify its costs and is not a ''significant regulatory action'' as defined in the Executive Order; (2) is not significant as defined in the Department of Transportation's (DOT) Regulatory Policies and Procedures; (3) would not have a significant impact on a substantial number of small entities; and (4) would not constitute a barrier to international trade. These analyses, available in the docket, are summarized below.

Regulatory Evaluation Summary

Depending on airplane design, the proposed rule could result in additional compliance costs for some manufacturers. If manufacturers choose to design to and justify a V_D–V_C margin of 0.05 Mach, there would be an increase in analysis costs of approximately $145,000 per certification. The proposed requirement in § 25.473 to consider structural flexibility in the analysis of landing loads and the proposed increase in the factor on the maximum static reaction on the nose gear vertical force in § 25.499 could add compliance costs, but the FAA estimates that these would be negligible.

The proposed rule would also result in cost savings. Proposed revisions in the conditions in which unchecked pitch maneuvers are investigated could reduce certification costs by as much as $10,000 per certification. The FAA estimates that the proposed change in the speed margin between V_B and V_C from a fixed margin to a margin variable with altitude could result in substantial, though unquantified, cost savings to some manufacturers. Manufacturers that design small transport category airplanes with direct mechanical rudder control systems could realize a savings as a result of the modification in the rudder control force limit in proposed § 25.351. The FAA solicits information from manufacturers and other interested parties concerning these and other benefits of the proposed rule.

The primary benefit of the proposed rule would be cost savings associated with harmonization of part 25 with JAR–25. In order to sell airplanes in a global marketplace, manufacturers usually certify their products under part 25 and JAR–25. Harmonizing design load requirements would outweigh any incremental costs of the proposal, resulting in a net cost savings. These savings would be realized by U.S. manufacturers that market airplanes in JAA countries as well as by manufacturers in JAA countries that market airplanes in the United States.

The proposed change to § 25.335(b)(2) in the minimum speed margin for atmospheric conditions from 0.05 Mach and 0.07 Mach could produce safety benefits. The increase in the margin between V_D/M_D and V_C/M_C would be more conservative and would standardize training across international lines. Crews could cross-train and cross-fly and this standardization could enhance safety as well as result in more efficient training.

The FAA solicits information from manufacturers and other interested parties concerning these and other benefits of the proposed rule.

Regulatory Flexibility Determination

The Regulatory Flexibility Act of 1980 (RFA) was enacted by Congress to ensure that small entities are not unnecessarily and disproportionally burdened by Federal regulations. The RFA requires agencies to determine whether rules would have ''a significant economic impact on a substantial number of small entities,'' and, in cases where they would, to conduct a regulatory flexibility analysis. Based on FAA Order 2100.14A, Regulatory Flexibility Criteria and Guidance, the FAA has determined that the proposed revisions would not have a significant economic impact on a substantial number of small entities because there are no small manufacturers of transport category airplanes.

International Trade Impact Assessment

The proposed rule would not constitute a barrier to international trade, including the export of U.S. airplanes to foreign markets and the import of foreign airplanes into the United States. Because the proposed rule would harmonize with the JAR, it would, in fact, lessen restraints on trade.

Federalism Implications

The regulations proposed herein would not have substantial direct effects on the states, on relationship between the national government and the states, or on the distribution of power and responsibilities among the various levels of government. Thus, in accordance with Executive Order 12612, it is determined that this proposal does not have sufficient federalism implications to warrant the preparation of a Federalism Asssessment.

Conclusion

Because the proposed changes to the structural loads requirements are not expected to result in any substantial economic costs, the FAA has determined that this proposed regulation would not be significant under Executive Order 12866. Because there has not been significant public interest in this issue, FAA has determined that this action is not significant under DOT Regulatory Policies and Procedures (44 FR 11034; February 25, 1979). In addition, since there are no small entities affected by this rulemaking, the FAA certifies that the rule, if promulgated, would not have a significant economic impact, positive or negative, on a substantial number of small entities under the criteria of the Regulatory Flexibility Act, since none would be affected. A copy of the regulatory evaluation prepared for this project may be examined in the Rules Docket or obtained from the person identified under the caption **FOR FURTHER INFORMATION CONTACT.**

List of Subjects in 14 CFR Part 25

Air transportation, Aircraft, Aviation safety, Safety.

The Proposed Amendments

Accordingly, the Federal Aviation Administration (FAA) proposes to amend 14 CFR part 25 of the Federal Aviation Regulations as follows:

PART 25—AIRWORTHINESS STANDARDS: TRANSPORT CATEGORY AIRPLANES

1. The authority citation for Part 25 continues to read as follows:

Authority: 49 U.S.C. App. 1347, 1348, 1354(a), 1357(d)(2), 1372, 1421 through 1430, 1432, 1442, 1443, 1472, 1510, 1522, 1652(e), 1655(c), 1657(f), 49 U.S.C. 106(g).

2. Section 25.331 is amended by revising the introductory text of paragraph (c) and paragraph (c)(1) to read as follows:

§ 25.331 General.

* * * * *

(c) *Pitch maneuver conditions.* The conditions specified in paragraphs (c)(1) and (2) of this section must be investigated. The movement of the pitch control surfaces may be adjusted to take into account limitations imposed by the maximum pilot effort specified by § 25.397(b), control system stops and any indirect effect imposed by limitations in the output side of the control system (for example, stalling torque or maximum rate obtainable by a power control system).

(1) *Maximum pitch control displacement at V_A.* The airplane is assumed to be flying in steady level flight (point A_1, § 25.333(b)) and the cockpit pitch control is suddenly moved to obtain extreme nose up pitching acceleration. In defining the tail load, the response of the airplane must be taken into account. Airplane loads that occur subsequent to the time when normal acceleration at the c.g. exceeds the positive limit maneuvering load factor (at point A_2 § 25.333(b)), or the resulting tailplane normal load reaches its maximum, whichever occurs first, need not be considered.

* * * * *

3. Section 25.335 is amended by revising paragraphs (a)(2) and (b)(2) to read as follows:

§ 25.335 Design airspeeds.

* * * * *

(a) * * *

(2) Except as provided in § 25.335(d)(2), V_C may not be less than V_B+1.32 U_{REF} (with U_{REF} as specified in § 25.341(a)(5)(i)). However V_C need not exceed the maximum speed in level flight at maximum continuous power for the corresponding altitude.

(3) * * *

(b) * * *

(2) The minimum speed margin must be enough to provide for atmospheric variations (such as horizontal gusts, and penetration of jet streams and cold fronts) and for instrument errors and airframe production variations. These factors may be considered on a probability basis. The margin at altitude where M_C is limited by compressibility effects must not be less than 0.07M unless a lower margin is determined using a rational analysis that includes the effects of any automatic systems. In any case, the margin may not be reduced to less than 0.05M.

* * * * *

4. Section 25.345 is amended by revising paragraph (d) to read as follows:

§ 25.345 High lift devices.

* * * * *

(d) The airplane must be designed for a maneuvering load factor of 1.5g at the maximum take-off weight with the wing-flaps and similar high lift devices in the landing configurations.

5. Section 25.351 is revised to read as follows:

§ 25.351 Yaw maneuver conditions.

The airplane must be designed for loads resulting from the yaw maneuver conditions specified in paragraphs (a) through (d) of this section at speeds from V_{MC} to V_D. Unbalanced aerodynamic moments about the center of gravity must be reacted in a rational or conservative manner considering the airplane inertia forces. In computing the tail loads the yawing velocity may be assumed to be zero.

(a) With the airplane in unaccelerated flight at zero yaw, it is assumed that the cockpit rudder control is suddenly displaced to achieve the resulting rudder deflection, as limited by:

(1) The control system or control surface stops; or

(2) A limit pilot force of 300 pounds from V_{MC} to V_A and 200 pounds from V_C/M_C to V_D/M_D, with a linear variation between V_A and V_C/M_C.

(b) With the cockpit rudder control deflected so as always to maintain the maximum rudder deflection available within the limitations specified in paragraph (a) of this section, it is assumed that the airplane yaws to the overwing sideslip angle.

(c) With the airplane yawed to the static equilibrium sideslip angle, it is assumed that the cockpit rudder control is held so as to achieve the maximum rudder deflection available within the limitations specified in paragraph (a) of this section.

(d) With the airplane yawed to the static equilibrium sideslip angle of paragraph (c) of this section, it is assumed that the cockpit rudder control is suddenly returned to neutral.

6. Section 25.363 is amended by revising the title and paragraph (a) to read as follows:

§ 25.363 Side load on engine and auxiliary power unit mounts.

(a) Each engine and auxiliary power unit mount and its supporting structure must be designed for a limit load factor in a lateral direction, for the side load on the engine and auxiliary power unit mount, at least equal to the maximum load factor obtained in the yawing conditions but not less than—

(1) 1.33; or

(2) One-third of the limit load factor for flight condition A as prescribed in § 25.333(b).

* * * * *

7. Section 25.371 is revised to read as follows:

§ 25.371 Gyroscopic loads.

The structure supporting any engine or auxiliary power unit must be designed for the loads including the gyroscopic loads arising from the conditions specified in §§ 25.331, 25.341(a), 25.349, 25.351, 25.473, 25.479, and 25.481, with the engine or auxiliary power unit at the maximum rpm appropriate to the condition. For the purposes of compliance with this section, the pitch maneuver in § 25.331(c)(1) must be carried out until the positive limit maneuvering load factor (point A_2 in § 25.333(b)) is reached.

8. Section 25.415 is amended by revising paragraph (a)(2) to read as follows:

§ 25.415 Ground gust conditions.

(a) * * *

(1) * * *

(2) The control system stops nearest the surfaces, the control system locks, and the parts of the systems (if any) between these stops and locks and the control surface horns, must be designed for limit hinge moments H, in foot pounds, obtained from the formula,

$$H=14.3\ KcS,$$

where—

K=limit hinge moment factor for ground gusts derived in paragraph (b) of this section.

c=mean chord of the control surface aft of the hinge line (ft);

S=area of the control surface aft of the hinge line (sq. ft);

* * * * *

9. Section 25.473 is revised to read as follows:

§ 25.473 Landing load conditions and assumptions.

(a) For the landing conditions specified in §§ 25.479 to 25.485 the airplane is assumed to contact the ground—

(1) In the attitudes defined in § 25.479 and § 25.481;

(2) With a limit descent velocity of 10 fps at the design landing weight (the maximum weight for landing conditions at maximum descent velocity); and

(3) With a limit descent velocity of 6 fps at the design take-off weight (the maximum weight for landing conditions at a reduced descent velocity).

(4) The prescribed descent velocities may be modified if it is shown that the airplane has design features that make it impossible to develop these velocities.

(b) Airplane lift, not exceeding airplane weight, may be assumed unless the presence of systems or procedures significantly affects the lift.

(c) The method of analysis of airplane and landing gear loads must take into account at least the following elements:

(1) Landing gear dynamic characteristics.

(2) Spin-up and springback.

(3) Rigid body response.

(4) Structural dynamic response of the airframe, if significant.

(d) The limit inertia load factors corresponding to the required limit descent velocities must be validated by tests as defined in § 25.723(a).

(e) The coefficient of friction between the tires and the ground may be established by considering the effects of skidding velocity and tire pressure. However, this coefficient of friction need not be more than 0.8.

10. Section 25.479 is revised to read as follows:

§ 25.479 Level landing conditions.

(a) In the level attitude, the airplane is assumed to contact the ground at forward velocity components, ranging from V_{L1} to 1.25 V_{L2} parallel to the ground under the conditions prescribed in § 25.473 with—

(1) V_{L1} equal to V_{S0} (TAS) at the appropriate landing weight and in standard sea level conditions; and

(2) V_{L2} equal to V_{S0} (TAS) at the appropriate landing weight and

altitudes in a hot day temperature of 41 degrees F. above standard.

(3) The effects of increased contact speed must be investigated if approval of downwind landings exceeding 10 knots is requested.

(b) For the level landing attitude for airplanes with tail wheels, the conditions specified in this section must be investigated with the airplane horizontal reference line horizontal in accordance with Figure 2 of Appendix A of this part.

(c) For the level landing attitude for airplanes with nose wheels, shown in Figure 2 of Appendix A of this part, the conditions specified in this section must be investigated assuming the following attitudes:

(1) An attitude in which the main wheels are assumed to contact the ground with the nose wheel just clear of the ground; and

(2) If reasonably attainable at the specified descent and forward velocities, an attitude in which the nose and main wheels are assumed to contact the ground simultaneously.

(d) In addition to the loading conditions prescribed in paragraph (a) of this section, but with maximum vertical ground reactions calculated from paragraph (a), the following apply:

(1) The landing gear and directly affected attaching structure must be designed for the maximum vertical ground reaction combined with an aft acting drag component of not less than 25% of this maximum vertical ground reaction.

(2) The most severe combination of loads that are likely to arise during a lateral drift landing must be taken into account. In absence of a more rational analysis of this condition, the following must be investigated:

(i) A vertical load equal to 75% of the maximum ground reaction of § 25.473 must be considered in combination with a drag and side load of 40% and 25% respectively of that vertical load.

(ii) The shock absorber and tire deflections must be assumed to be 75% of the deflection corresponding to the maximum ground reaction of § 25.25.473(a)(2). This load case need not be considered in combination with flat tires.

(3) The combination of vertical and drag components is considered to be acting at the wheel axle centerline.

11. Section 25.481 is amended by revising paragraph (a) introductory text to read as follows:

§ 25.481 Tail down landing conditions.

(a) In the tail-down attitude, the airplane is assumed to contact the ground at forward velocity components, ranging from V_{L1} to V_{L2} parallel to the ground under the conditions prescribed in § 25.473 with—

* * * * *

12. Section 25.483 is amended by revising the title, introductory text, and paragraph (a) to read as follows:

§ 25.483 One-gear landing conditions.

For the one-gear landing conditions, the airplane is assumed to be in the level attitude and to contact the ground on one main landing gear, in accordance with Figure 4 of Appendix A of this part. In this attitude—

(a) The ground reactions must be the same as those obtained on that side under § 25.479(d)(1), and

* * * * *

13. Section 25.485 is amended by adding introductory text to read as follows:

§ 25.485 Side load conditions.

In addition to § 25.479(d)(2) the following conditions must be considered:

* * * * *

14. Section 25.491 is revised to read as follows:

§ 25.491 Taxi, takeoff and landing roll.

Within the range of appropriate ground speeds and approved weights, the airplane structure and landing gear are assumed to be subjected to loads not less than those obtained when the aircraft is operating over the roughest ground that may reasonably be expected in normal operation.

15. Section 25.499 is amended by revising the heading and paragraph (e) to read as follows:

§ 25.499 Nose-wheel yaw and steering.

* * * * *

(e) With the airplane at design ramp weight, and the nose gear in any steerable position, the combined application of full normal steering torque and vertical force equal to 1.33 times the maximum static reaction on the nose gear must be considered in designing the nose gear, its attaching structure, and the forward fuselage structure.

16. Section 25.561 is amended by revising paragraph (c) to read as follows:

§ 25.561 General.

* * * * *

(c) For equipment, cargo in the passenger compartments and any other large masses, the following apply:

(1) These items must be positioned so that if they break loose they will be unlikely to

(i) Cause direct injury to occupants;

(ii) Penetrate fuel tanks or lines or cause fire or explosion hazard by damage to adjacent systems; or

(iii) Nullify any of the escape facilities provided for use after an emergency landing.

(2) When such positioning is not practical (e.g., fuselage mounted engines or auxiliary power units) each such item of mass shall be restrained under all loads up to those specified in paragraph (b)(3) of this section. The local attachments for these items should be designed to withstand 1.33 times the specified loads if these items are subject to severe wear and tear through frequent removal (e.g., quick change interior items).

* * * * *

Issued in Washington, D.C. on August 16, 1995.

Thomas E. McSweeny,

Director, Aircraft Certification Service.

[FR Doc. 95–21012 Filed 8–28–95; 8:45 am]

BILLING CODE 4910–13–M

DEPARTMENT OF TRANSPORTATION

Federal Aviation Administration

Proposed Advisory Circular 25.335–1, Design Dive Speed

AGENCY: Federal Aviation Administration, DOT.

ACTION: Notice of availability of proposed circular (AC) 25.335–1 and request for comments.

SUMMARY: This notice announces the availability of and requests comments on a proposed advisory circular (AC) which provides a method of compliance with the requirements of § 25.335 of the Federal Aviation Regulations (FAR). Section 23.335 contains the certification requirements for the minimum speed margin between cruise speed and design dive speed for transport category airplanes. This proposed AC complements revisions to the airworthiness standards that are being proposed by a separate notice. This notice is necessary to give all interested persons an opportunity to present their views on the proposed AC.

DATES: Comments must be received on or before November 27, 1995.

ADDRESSES: Send all comments on proposed AC to: Federal Aviation Administration, Attention: James Haynes, Airframe and Propulsion Branch, ANM–112, Transport Airplane Directorate, Aircraft Certification Service, 1601 Lind Avenue SW., Renton, WA 98055–4056. Comments may be inspected at the above address between 7:30 a.m. and 4:00 p.m. weekdays, except Federal holidays.

FOR FURTHER INFORMATION CONTACT: Jan Thor, Transport Standards Staff, at the address above, telephone (206) 227–2127.

SUPPLEMENTARY INFORMATION:

Comments Invited

A copy of the draft AC may be obtained by contacting the person named above under **FOR FURTHER INFORMATION CONTACT.** Interested persons are invited to comment on the proposed AC by submitting such written data, views, or arguments as they may desire.

Commenters should identify AC 25.335–1 and submit comments, in duplicate, to the address specified above. All communications received on or before the closing date for comments will be considered by the Transport Standards Staff before issuing the final AC.

Discussion

Section 25.335(b) requires the design dive speed of the airplane to be established so that the design cruise speed is no greater than 0.8 times the design dive speed or that it be based on an upset criterion initiated at the design cruise speed. At altitudes where the cruise speed is limited by compressibility effects, § 25.335(b)(2) requires the margin to be not less than 0.05 Mach. Furthermore, at any altitude, the margin must be great enough to provide for atmospheric variations (such as horizontal gusts and the penetration of jet streams), instrument errors, and reduction variations. This proposed AC provides a rational method for considering the atmospheric variations This proposed AC provides guidance material and one means, but not the only means, of complying with the part 25 revisions proposed in Notice No. 95–14 entitled ''Revised Structural Loads Requirements for Transport Category Airplanes,'' published in this same edition of the **Federal Register**. Issuance of AC 25.335–1 is contingent on final adoption of the proposed revisions to part 25.

Issued in Renton, Washington, on July 14, 1995.

James V. Devany,

Acting Manager, Transport Airplane Directorate, Aircraft Certification Service, ANM–100.

[FR Doc. 95–21011 Filed 8–28–95; 8:45 am]

BILLING CODE 4910–13–M

federal register

Tuesday
August 29, 1995

Part V

Department of Transportation

Coast Guard

33 CFR 156

Designation of Lightering Zones in the Gulf of Mexico; Final Rule

DEPARTMENT OF TRANSPORTATION

Coast Guard

33 CFR Part 156

[CGD 93–081]

RIN 2115–AE90

Designation of Lightering Zones

AGENCY: Coast Guard, DOT.

ACTION: Final rule.

SUMMARY: The Coast Guard is designating four lightering zones in the Gulf of Mexico, each more than 60 miles from the baseline from which the territorial sea of the United States is measured. By using these lightering zones, single hull tank vessels contracted for after June 30, 1990, and older single hull tank vessels phased out by the Oil Pollution Act of 1990, will be permitted to offload oil in the U.S. Exclusive Economic Zone (EEZ) until January 1, 2015 for transshipment to U.S. ports. This rule establishes the first lightering zones designated by the Coast Guard. It also establishes three areas in the Gulf of Mexico where all lightering will be prohibited.

EFFECTIVE DATE: This rule is effective on August 29, 1995. The Director of the Federal Register approves as of August 29, 1995, the incorporation by reference of certain publications listed in § 156.111.

ADDRESSES: Unless otherwise indicated, documents referred to in this preamble are available for inspection or copying at the office of the Executive Secretary, Marine Safety Council (G–LRA/3406), U.S. Coast Guard Headquarters, 2100 Second Street, SW., room 3406, Washington, DC 20593–0001, between 8 a.m. and 3 p.m., Monday through Friday, except Federal holidays. The telephone number is (202) 267–1477.

FOR FURTHER INFORMATION CONTACT: LCDR Stephen Kantz, Project Manager, Oil Pollution Act (OPA 90) Staff, (G–MS–A), (202) 267–6740. This telephone is equipped to record messages on a 24-hour basis.

SUPPLEMENTARY INFORMATION:

Drafting Information

The principal persons involved in drafting this document are LCDR Stephen Kantz, Project Manager, Oil Pollution Act (OPA 90) Staff, and C. G. Green, Project Counsel, Regulations and Administrative Law Division (G–LRA).

Regulatory History

In November 1993, the Coast Guard received several requests to establish lightering zones in the Gulf of Mexico. On December 2, 1993, the Coast Guard published in the **Federal Register** a notice of these petitions for rulemaking and request for comment (58 FR 63544).

The requests received by the Coast Guard for the designation of lightering zones varied in their specifics. One requested that all U.S. waters of the Gulf of Mexico more than 60 miles beyond the baseline from which the territorial sea is measured be designated as a lightering zone. Another sought a large lightering zone off the coast of Texas and a smaller one off the coast of Louisiana. The third request was for a lightering zone off the coast of Mississippi.

On December 16, 1993, the Coast Guard published in the **Federal Register** a notice of public meeting to solicit opinions on whether lightering zones should be established and, if so, where they should be located and what operating conditions should be mandated (58 FR 65683). A public meeting was held in Houston, Texas, on January 18, 1994. Ninety-six people attended this meeting, representing industry, environmental advocates, and government agencies.

On January 5, 1995, the Coast Guard published a notice of proposed rulemaking (NPRM) entitled ''Designation of Lightering Zones'' in the **Federal Register** (60 FR 1958). The Coast Guard received 23 letters commenting on the proposal.

On January 13, 1995, the Coast Guard published in the **Federal Register** a notice of public meeting to solicit additional opinions on the NPRM (60 FR 3185). A public meeting was held in Metairie, Louisiana, on February 16, 1995. Fifty-five people attended this meeting, representing tankship owners and operators, service and support industries, and government agencies. Ten attendees made oral presentations, and most of these individuals subsequently provided written copies of their presentations for the docket. No additional public meeting was requested and none was held.

Background and Purpose

Section 3703a of Title 46 of the United States Code establishes the requirements for tank vessels eventually to be equipped with double hulls, and includes a phaseout schedule for single hull tank vessels. This section also provides exemptions from the double hull requirement. Until January 1, 2015, a tank vessel need not comply with the double hull requirement when it is offloading oil at a deepwater port licensed under the Deepwater Port Act of 1974, as amended (33 U.S.C. 1501, *et seq.*) or within a lightering zone established under 46 U.S.C. 3715(b)(5), which is more than 60 miles from the baseline from which the U.S. territorial sea is measured (46 U.S.C. 3703a(b)(3)). Currently, only the Louisiana Offshore Oil Port (LOOP) has been authorized under the Deepwater Port Act of 1974. No lightering zones have previously been established under 46 U.S.C. 3715(b)(5).

By using designated lightering zones more than 60 miles from the baseline from which the territorial sea is measured, single hull tank vessels contracted for after June 30, 1990, and older single hull tank vessels phased out by the Oil Pollution Act of 1990 (OPA 90) (Pub. L. 101–380), will be able to lighter until January 1, 2015. For clarification, throughout the preamble discussion for this final rule, the term ''double hull'' means a tank vessel meeting the requirements of 33 CFR 157.10d, or an equivalent to the requirements of 33 CFR 157.10d. The term ''single hull'' tank vessel means any tank vessel which does not conform to, or is not considered equivalent to, the requirements of 33 CFR 157.10d.

Before proposing the zones designated by this rule, in accordance with 33 CFR part 156, the Coast Guard considered the various factors in designating lightering zones: Traditional use of the area for lightering; weather and sea conditions; water depth; proximity to shipping lanes, vessel traffic schemes, anchorages, fixed structures, designated marine sanctuaries, fishing areas, and designated units of the National Park System, National Wild and Scenic Rivers System, National Wilderness Preservation System, properties included on the National Register of Historic Places and National Registry of Natural Landmarks, and National Wildlife Refuge System; and other relevant safety, environmental, and economic data (33 CFR 156.230). Current regulations at 33 CFR 156.225 provide the District Commander the authority to designate lightering zones. Due to the extensive environmental and economic analysis required, and because this rulemaking was determined to be a significant regulatory action under Department of Transportation (DOT) policy, this rulemaking was prepared by the Commandant of the Coast Guard. However, this rulemaking by the Commandant will not affect the District Commander's authority under 33 CFR 156.225 to administer and modify these zones as appropriate or to designate subsequent lightering zones.

Related Rulemakings

On September 15, 1993, the Coast Guard published a final rule (CGD 90–052) revising 33 CFR part 156, subpart B, to clarify that regulations issued under section 311(j) of the Federal Water Pollution Control Act (FWPCA) (33 U.S.C. 1321 *et seq.*) apply to offshore lightering operations when conducted in the U.S. marine environment (58 FR 48436). Under that rulemaking, a Declaration of Inspection (as required by 33 CFR 156.150) and a vessel response plan (if required under part 155) serve as acceptable evidence of compliance with section 311(j) of the FWPCA. The vessel to be lightered and the service vessel, as defined in 33 CFR 156.205, must both have such evidence of compliance on board at the time of a transfer. The rule also amended 33 CFR 156.215, pre-arrival notice requirements, to include the number of transfers expected and the amount of cargo expected to be transferred during each lightering operation.

On July 1, 1994, the Coast Guard published an interim final rule (CGD 91–005) implementing provisions concerning financial responsibility for vessels under OPA 90 and the Comprehensive Environmental Response, Compensation, and Liability Act (CERCLA), as amended. These provisions included expanding the applicability of the financial responsibility requirements of 33 CFR part 130 to ''vessels of any size using the waters of the exclusive economic zone to transship or lighter oil'', specifically meaning both the delivering and receiving vessels. Consequently, when lightering in the EEZ, both vessels are required to possess valid Certificates of Financial Responsibility (COFR) demonstrating evidence of insurance, or other evidence of financial responsibility, sufficient to meet the vessels' potential liability under OPA 90 and CERCLA for discharges or threatened discharges of oil. This requirement went into effect July 1, 1994.

Effective Date

This rule is being made effective on August 29, 1995. Under 5 U.S.C. 553(d) a rule may be made effective less than 30 days after its publication if it grants or recognizes an exemption or relieves a restriction. At the present time, single hull tank vessels contracted for after June 30, 1990, and single hull tank vessels phased out by OPA 90 cannot offload oil destined for the U.S. in the U.S. Exclusive Economic Zone (EEZ) except at a deepwater port or in a designated lightering zone. The first single hull vessel phase out date went into effect January 1, 1995. There is only one deepwater port (LOOP) and this deepwater port does not provide oil to many of the refineries along the Gulf Coast. This rule establishes the first designated lightering zones for the United States. By using these lightering zones, single hull tank vessels currently precluded from operating in the EEZ may lighter their oil cargo closer to the U.S. ports for which it is destined. For these reasons, the Coast Guard finds that this rule should be made effective in less than 30 days after publication.

Discussion of Comments and Changes

The Coast Guard has reviewed all of the comments received in response to the NPRM and, in some instances, revised the final rule language based on these comments. The comments have been grouped by major issue or specific regulatory section and are discussed below.

General

Of the comments received in response to the NPRM, most generally supported the designation of lightering zones in the Gulf of Mexico and noted that the need for lightering was increasing.

An individual representing the American Institute of Merchant Shipping (AIMS), the American Petroleum Institute (API), and the Industry Task Force on Offshore Lightering (ITOL) spoke at the public meeting in New Orleans and also provided a letter to the docket, giving a number of detailed reasons why these organizations all support this rulemaking. Together these organizations represent over 300 companies engaged in all aspects of the petroleum and marine transportation industry. Since the comments, both at the public meeting and in a letter to the docket, present the views of the majority of commercial interests impacted by this rulemaking, they are identified as the ''industry comments'' throughout the remaining preamble discussion, and the individual who spoke at the hearing is identified as the ''industry representative''.

At the public meeting the industry representative stated that lightering has long been established as a safe and effective means of transferring imported crude oil from tankers too large for shallow water ports to small tankers that serve refineries ashore. He further stated that 25 percent of U.S. crude oil imports are delivered this way in the Gulf of Mexico at a rate of approximately 2 million barrels per day. He asserted that the establishment of these zones is absolutely critical to meet the supply requirements of U.S. refineries and noted that lightering operations historically have been conducted in a safe and environmentally sound manner. He cited the Coast Guard 1993 Deepwater Ports Study which stated that between 1986 and 1990 only 15 lightering casualties were reported for a total spillage of 45 barrels and that the relative risk factor of lightering operations in zones 40 to 60 miles offshore was zero. The industry representative added that factors which would benefit spill response and mitigation should be considered in establishing lightering zones.

Two comments from organizations involved in the shipbuilding industry generally opposed the proposed regulations. Both comments stated that the designation of lightering zones would be a disincentive to purchase new double hull tankers. They also stated that the continued use of single hull tankers would increase the potential risks of collisions and oil spills which OPA 90 was intended to prevent, and that the proposed regulations would circumvent the transition to double hull tankers.

The Coast Guard has determined that establishing lightering zones will not encourage further single hull tanker construction. Such construction is effectively barred by the International Maritime Organization's (IMO) adoption of Regulation 13F of Annex I to the International Convention for the Prevention of Pollution from Ships, 1973, as modified by the Protocol of 1978 (MARPOL 73/78) which requires double hull or mid-deck construction of all new tankers for which contracts are placed on or after July 6, 1993, or which are to be completed after July 6, 1996. (It should be noted that mid-deck construction is not an acceptable alternative to a double hull under 46 U.S.C. 3703a). Additionally, the IMO has adopted Regulation 13G in Annex I of MARPOL 73/78. Regulation 13G subjects tank vessels to increasingly rigorous hull surveys at 5-year intervals and is practically certain to bring about the timely retirement of most aging single hull tankers. This retirement of single hull tankers would occur, notwithstanding the exemption under OPA 90 that permits single hull tankers to operate in U.S. waters until the year 2015 by using a designated lightering zone. It is the consensus of the worldwide industry that a minority of crude oil tankers will survive the prohibitively costly survey regimen that will begin at their 25th anniversary survey. The international regulations, in conjunction with the provisions of section 4115 of OPA 90, effectively

ensure that the day of the single hull tanker is ending. Available data shows that many single hull tankers are being scrapped earlier than required by either OPA 90 or MARPOL 73/78.

A letter from the Minerals Management Service (MMS) of the Department of the Interior expressed concern about establishing lightering zones in active oil and gas development areas on the Outer Continental Shelf (OCS). It was concerned with the safety of offshore production facilities which could be at risk from vessels in the proposed lightering zones. The comment urged that the Coast Guard work together with MMS to monitor lightering zones to avoid use conflicts and to promote safety, and suggested that the Coast Guard decrease the size of the proposed zones or require permanent mooring buoys for use by lightering vessels.

The Coast Guard is aware of the active mineral and oil industry on the Gulf of Mexico's OCS and has historically been involved with the safety of the offshore marine industry and environment. The reserves and refineries of the western Gulf Coast region play a significant role in the nation's energy needs. The development of the extensive refining capacity which now exists along the Gulf Coast was a consequence of the development of regional land-based oil and gas reserves as well as those offshore. Due to the fluctuations in crude oil prices and the variations in crude oil composition, these Gulf Coast refineries must supplement their domestically produced sources with waterborne oil imports. This rule will help to meet the regional needs of these refiners for imported oil and provide stability to the nation's energy supply and economy. The designated lightering zones and prohibited areas in this rulemaking will only affect the lightering activities within their geographical bounds and will not interfere with or discourage the development of OCS oil and gas reserves.

Regarding the safety of offshore production facilities from vessel activities in the lightering zones, only the South Sabine Point lightering zone and the northern tip of the Southtex lightering zone include waters where an appreciable number of production facilities have been constructed. A significant factor favoring construction of production platforms in these areas is the shallow water depths, generally less than 200 meters (109 fathoms). The shallower areas of the South Sabine Point and the northern tip of the Southtex lightering zones allow lightering to be conducted while vessels are anchored.

During the last 15 years, offshore lightering in the vicinity of the South Sabine Point transshipment area (TSA) and Offshore Galveston No. 1 and No. 2 TSAs has not proven to be a safety hazard to the production platforms in the areas, nor has it affected offshore oil and gas development. It is anticipated that lightering will continue in these locations even after designation of lightering zones. The operational restrictions in this rule mirror several practices currently used by many offshore lightering companies. One of these industry practices is a 1-nautical mile minimum closest-point-of-approach (CPA) to production platforms and drilling units. The maintenance of a 1-nautical mile CPA by lighterers has thus far proven adequate to provide for the safety of nearby offshore mineral, oil, and gas development facilities. Formally requiring this minimum CPA and other operating restrictions in the final rule enhances the safety of production facilities in the designated lightering zones. The remaining areas of the designated lightering zones, other than South Sabine Point and the northern tip of Southtex zones, have undergone little development and, therefore, provide expansive open waters to all users.

This rulemaking establishes the first lightering zones designated by the Coast Guard. As discussed previously, the District Commander's authority at 33 CFR 156.225 to designate lightering zones and their operating requirements remains unaffected by this rulemaking. The Commander, Eighth Coast Guard District, located in New Orleans, Louisiana, will administer the lightering zones designated in this rule. If experience indicates that a realistic threat to offshore facilities exists or that additional safety criteria or procedures are warranted to regulate activities in these zones, the District Commander may revise these regulations as appropriate.

One comment suggested that the proposed regulations should also authorize offloading of oil from deepwater production facilities located inside lightering zones. These facilities would include tension leg platforms, spars, semi-submersibles, and converted tankers.

The comment misunderstood the NPRM as limiting authorized operations within lightering zones to lightering and bunkering operations from oceangoing tankers. There are no generally authorized or prohibited activities in designated lightering zones. Rather, this rule regulates how lightering activities should be conducted within the designated zones. Offloading of oil from deepwater production facilities in designated lightering zones is not prohibited or otherwise regulated by this rule. That activity continues to be subject to the regulations in 33 CFR part 154 and subpart A of part 156, whether the activity occurs inside or outside a designated lightering zone.

Addition of Fourth Lightering Zone at South Sabine Point

In the NPRM for this rulemaking, the Coast Guard specifically requested comments on whether an additional area off Galveston, Texas, in the vicinity of South Sabine Point TSA, should be designated as a fourth lightering zone. Twelve comments addressed this issue.

These comments supported designating the area as an additional lightering zone. The comments indicated that this area is closest to lightering support centers of Texas refining complexes and within range of all support helicopters. The comments also indicated that the South Sabine Zone would decrease congestion in the northwestern corner of the Southtex zone by providing additional anchorage area for lightering operations. Industry comments at the public meeting in New Orleans detailed reasons why an additional zone at South Sabine Point should be established. These reasons were stated as follows:

(1) The South Sabine Point zone is closest to shoreside responders and response vessels pre-staged to respond to a pollution incident.

(2) In many environmental conditions, anchoring is the preferred method of lightering. This procedure generally is not available to tankers lightering in the other lightering zone off the coast of Texas (Southtex), where the waters are largely too deep.

(3) Shallower water depths in the South Sabine Point zone contribute to more moderate sea conditions than those generally found in the Southtex zone.

(4) This area is currently being used for lightering and historically has been so used for almost 20 years.

(5) It is the closest zone to the principal lightering support centers of eastern Texas.

(6) This area is also within the range of most helicopters from the Houston-Galveston-Port Arthur areas which can fly round trip, without requiring refueling.

(7) The majority of oil lightered in the Gulf of Mexico is destined for the Houston-Galveston-Port Arthur areas. If the Southtex zone were the only one available for tankers with oil destined

for Houston, Galveston, or Port Arthur, the added costs for support and transportation would create an additional economic burden for many Texas refineries. This burden would not be shared by other refineries on the Gulf Coast, placing them at an economic disadvantage.

(8) Because of proximity to ports and shallower water depths for anchoring, the northwestern corner of the Southtex zone would get very crowded if lightering were not allowed in the South Sabine Point zone.

(9) The extension of the logistics lines for lightering support is a major safety and economic concern.

Unified comments from three international organizations heavily involved in the tanker industry, Oil Companies International Marine Forum (OCIMF), the International Chamber of Shipping (ICS), and the International Association of Independent Tanker Owners (INTERTANKO), expressed support for the designation of the proposed lightering zones. These organizations also supported the designation of South Sabine Point zone, citing many of the same reasons as in the industry comments. The Texas GLO also supported the designation of the South Sabine Point zone.

Data contained in the Regulatory Assessment on 1992 U.S. crude oil imports by water show that all offshore lightering for the U.S. was conducted in the Gulf of Mexico. The data further indicate that lightered oil delivered to the Houston, Galveston, and Port Arthur areas was approximately 50 percent of the total lightered oil, averaging over 800,000 barrels per day. Similar import data for 1993 shows an increase to 900,400 barrels per day. This latter figure represents 60 percent of the oil lightered in the Gulf of Mexico. Based on the data, the industry comments expressed at the public meeting, and comment letters to the docket, the Coast Guard has decided to designate a fourth zone named ''South Sabine Point.'' The boundaries of the South Sabine Point zone have been added to § 156.300 as a new paragraph (d). The same operational conditions and restrictions which apply in the proposed three lightering zones will apply to this new zone.

Request for Comments on Additional Rulemaking

In response to the Coast Guard's request for comments on whether to consider a rulemaking to change the traditional lightering areas into formal lightering zones and whether any of the concepts contained in the NPRM could be used in such a subsequent rulemaking, comments from industry noted that lightering operations are highly professional cargo transfer operations and that the industry's record for safety is outstanding. The comments stated that the purpose of this rulemaking is to implement the clear language of OPA 90 which allows single hull vessels to continue to lighter in the Gulf of Mexico until January 1, 2015, and that there is no need for this rulemaking to regulate current long-standing lightering operations being conducted elsewhere in the Gulf of Mexico.

The Texas GLO stated that the proposed weather, operational, and work hour limitations should apply to all vessels engaged in lightering activities regardless of their location. The GLO also suggested that lightering should be prohibited in all areas, except for the proposed designated lightering zones, and that designation of lightering zones would minimize the area which must be patrolled and inspected for compliance with the Coast Guard's rule. It added that the ability to plan for responses to offshore spills would be greatly enhanced by allowing lightering only in specific areas, asserting that failure to contain and remove oil from the offshore environment often results in substantial impact to Texas shores. The GLO cited the recent spill from the BERGE BANKER [1] as an example of such impact, noting that most of the fuel oil sank and that large tar mats and tar balls washed ashore in Texas weeks after the spill, threatening recreational use of the beaches.

The Coast Guard has decided to limit this rulemaking to designating lightering zones and prescribing some restrictions on lightering activities within the zones to implement the exceptions in OPA 90 to the double hull standards. The rule does not affect existing regulations concerning the response to and recovery of spilled oil. Other than the prohibited areas designated in § 156.310, the Coast Guard is not restricting lightering activities elsewhere in the Gulf of Mexico at this time, but it may do so in the future if circumstances change. The final rule contains a new paragraph in § 156.330 that governs vessels maneuvering in preparation for mooring alongside. Like the other operational restrictions in the final rule, it applies only in the lightering zones and is intended to prevent the occurrence of oil spills associated with that aspect of lightering activities in the zones.

One comment from National Oceanic and Atmospheric Administration (NOAA) suggested moving the northernmost boundary of the Southtex lightering zone 15 nautical miles to the south. This suggestion was based upon spill trajectory data concerning the Flower Gardens Sanctuary, which NOAA had obtained from the MMS. The suggested boundary change would keep the zone outside a 10 percent contact probability area over a 3-day period during the spring and summer seasons.

The Coast Guard has reviewed this trajectory information and has decided to retain the boundaries of the Southtex lightering zone as proposed in the NPRM. Accommodating the requested 3-day/10-percent seasonal contact probability would remove from the zone some of the area closer to shore where most users in this zone would operate. There are already numerous oil and gas production platforms within an 8 nautical mile range of the sanctuary. Additionally, the main east-west shipping fairway extends through the Flower Garden prohibited area between the marine sanctuary and the northern edge of the Southtex lightering zone. The Coast Guard believes that providing an 8 nautical mile distance from the northernmost boundary of the Southtex zone affords an adequate range of protection to the sanctuary against surface spillage. In the event of an oil spill originating at or near the water surface, the toxic effects of the soluble and lighter aromatic components of crude oil (C–12 [crude oil with 12 carbon molecules] or less) can reasonably be expected to be minimal after 24 hours of exposure to air, surface wave action, and the relatively warm climatic conditions of the Gulf. As indicated in a 1987 MMS study, small surface spills are unlikely to have any significant impact on the health of Flower Garden Banks corals. Oil from surface spills, driven into the water column to depths of 10 meters (33 feet), is found only at concentrations several

[1] The collision between two Norwegian tankers, the BERGE BANKER and the SKAUBAY, which were maneuvering in preparation for lightering, occurred on February 5, 1995. The vessels collided in the vicinity of the Offshore Galveston No. 2 transshipment area, 45 miles off the Texas coast. This incident constitutes the first transit casualty related to offshore lightering, and, although no cargo oil was spilled, nearly 900 barrels of heavy fuel oil spilled into the Gulf, creating an oil sheen 3 miles long. This collision is still under investigation.

The Coast Guard was the Federal On-Scene Coordinator for this spill cleanup both offshore and later on shore when beach impact occurred. The offshore cleanup of this spill was limited in its effectiveness due to two related factors: the type of oil spilled, a heavy bunker fuel oil, and the sea and weather conditions at the time. Although two oil spill recovery vessels were used for a period of 3 days, less than 5 barrels of oil was recovered. Due to subsequent winds and currents, the weathered oil washed ashore 12 days later on Matagorda Island, predominantly in the form of tar mats and balls.

orders of magnitude lower that those shown to have an effect on corals. Oil released in surface spills and driven 15 meters (50 feet) deep to the shallowest point on the Flower Garden Banks would be in such low concentrations that, according to the study, it would have no significant impact on these reefs.

Section 156.111 Incorporation by Reference

Five comments addressed this section of the NPRM. One comment agreed with the inclusion of documents mentioned in this section. A letter from the Oil Companies International Marine Forum (OCIMF) provided an updated address for their organization as well as for the International Chamber of Shipping (ICS). These two organizations are the co-authors of the Ship to Ship Transfer Guide (Petroleum). This section has been amended to reflect these new addresses.

Three of the comments suggested additional materials be included in this section. One comment suggested incorporating by reference the ''Limitation/Obstruction Markings'' discussion in the American Petroleum Institute publication, API Recommended Practice for Planning, Designing, and Construction of Heliports for Fixed Offshore Platforms in § 156.330, arguing that such guidelines should be included because markings benefit landing safety on shipboard helodecks. This same comment suggested making the International Chamber of Shipping (ICS) Guide to Helicopter/Ship Operations, Third Edition (1989), a recommended rather than mandated reference for operations in these lightering zones. Two comments suggested incorporation of two additional standards in § 156.330: the ITOL Guidelines for Offshore Lightering (1994), and the Rubber Manufacturers Association Specifications for Rubber Hose for Oil Suction and Discharge Specification (1991).

Comments from the Texas General Land Office (GLO), although generally supporting the rulemaking, stated that the goals of the rulemaking could be better served by requiring that the practices in the Oil Companies International Marine Forum (OCIMF) Ship to Ship Transfer Guide (Petroleum), Second Edition, 1988, and in the International Chamber of Shipping Guide to Helicopter/Ship Operations, Third Edition, 1989, apply to all lightering in the Gulf of Mexico.

Industry comments at the public meeting in New Orleans encouraged the Coast Guard to incorporate by reference industry standards and operating practices wherever possible as this is the most cost-effective and non-redundant method of establishing effective practical standards. The industry representative noted that the ITOL Operating Guidelines were developed specifically to address the conditions faced by lighterers in the Gulf of Mexico and that it would be appropriate that these guidelines be incorporated by reference into § 156.330 of the final regulations. He added that along these same lines, while the ICS helicopter guide is an excellent reference, there are some sections in the guide for which local conditions dictate a somewhat different approach to lightering operations and that the local helicopter guidelines should be incorporated by reference in § 156.330 in the regulations. Another comment from Gulf Coast helicopter operators also urged that conformity with the ICS helicopter guide not be required, citing the same reasons articulated by the industry representative.

The Coast Guard has reviewed both the OCIMF Guide and ICS Guide in light of these comments. The Coast Guard's position is that the authority and responsibility for the safety of a vessel, its crew, and its cargo rests with the master of that vessel. Consequently, since the practices and considerations presented in the OCIMF Guide, and the ICS Guide, are generally procedural recommendations, the Coast Guard is not making them mandatory in the lightering zones designated by this final rule. Rather, they should be implemented to the maximum extent practicable for vessels conducting lightering operations in these zones. The recommended procedures and checkoff sheets in these guides, along with the operational restrictions specified in this rulemaking, provide for safe lightering practices while still providing the masters of the respective vessels sufficient latitude to exercise their responsibility for safe navigation and cargo operations. This allows flexibility, for instance, in the use of peculiar fendering arrangements based upon the general arrangement of the vessels involved and the lighterers' preference based upon experience.

The Coast Guard is not incorporating by reference the ITOL Guidelines for Offshore Lightering (1994). However, several pertinent provisions of the ITOL Guidelines are reflected in § 156.330 of this final rule. Additionally, the Coast Guard agrees that the flow rates used with certain cargo oil transfer hoses should be left up to the lighterers' discretion based on the pumps and piping systems of the vessels involved. The Coast Guard notes that hoses which comply with the Rubber Manufacturers Association Specifications for Rubber Hose for Oil Suction and Discharge Specification (1991) would satisfy the requirements of 33 CFR 155.800. However, incorporation of a hose standard that would affect vessels other than those in the designated lightering zones is beyond the scope of this rulemaking.

Since the OCIMF Guide is not mandatory, the requirement for a radio voice warning in § 156.330(c) has been revised to require certain information identified in section 5.6 of the OCIMF Guide. This specific information includes:

—The names of the vessels involved;

—The vessels' geographical positions and general headings;

—A description of the operations;

—The expected time of commencement and duration of the operation; and

—Request for wide berth.

Section 156.205 Definitions

Three comments addressed this section. One comment stated that the definition of lightering at 33 CFR 156.205(b) should clearly state that oil spill response vessels (OSRVs), including barges, conducting ship to ship transfers as part of oil spill response operations are exempt from lightering regulations. This comment claimed that compliance with the proposed regulations might interfere with response activities. The Coast Guard agrees that operations related to the transfer of recovered oil from OSRVs were not intended to fall within the scope of the OCIMF Ship to Ship Transfer Guide (Petroleum).

Additionally, the equipment, arrangement, and construction requirements for OSRVs are specifically addressed by other Coast Guard requirements. Lightering conducted as a shipboard spill mitigation procedure under a spill response plan approved under subpart D of 33 CFR part 155 already incorporates the use of the OCIMF Guide transfer procedures. Consequently, the Coast Guard agrees that the lightering regulations in subpart B of 33 CFR part 156 should not apply to OSRVs or to vessels of opportunity in accordance with the National Contingency Plan (40 CFR parts 9 and 300) when transferring oil during oil spill response activities. In lieu of the requested revision to § 156.205, the Coast Guard is revising the applicability section for subpart B, § 156.200, to exclude such activity by these vessels from the requirements of this subpart.

Section 156.210 General

Four comments were received in response to this section of the NPRM. Two comments supported the proposed work hour limitations, while another comment argued that the limitations should conform to the stricter requirements proposed under the International Convention on Standards of Training, Certification and Watchkeeping for Seafarers, 1978 (STCW Convention). Taking unilateral action to impose the proposed STCW standards would be inappropriate. The Coast Guard will not initiate a rulemaking on these requirements until the provisions of the STCW Convention are finalized and adopted by the United States.

The fourth comment requested clarification as to whether the proposed work hour limitations would apply to laden service vessels actually located in designated lightering zones but not engaged in cargo transfer activities or to service vessels located in designated lightering zones but not carrying cargo. Industry generally supported the application of work hour and rest period restrictions to lightering operations, but recommended that the applicability of this requirement be clarified in the final rule.

The Coast Guard has clarified this section in the final rule, specifying the activity and the time period involved. When in the designated zones, the crews of both the tank vessels to be lightered and the crews of the service vessels are subject to the work hour limitations throughout the duration of lightering operations, as defined in 33 CFR 156.205(b). For these licensed individuals and seamen to start work during lightering operations in a lightering zone, their work hours during the last 24 and 72 hours prior to the commencement of the lightering operation must be considered, and the individual must be in compliance with this section. This section has been revised to clarify these applications.

Section 156.310 Prohibited Areas

Four comments addressed this section. One comment argued that the proposed prohibited areas were too extensive. Three comments suggested that only vessels lightering at anchor should be barred from these areas and not all lightering operations.

At the public meeting in Metairie, the industry representative commented that it appeared that the prohibited areas would apply to all lightering operations, not just those conducted by new or phased out single hull tankers. Industry perceived that the Coast Guard's concern with lightering in these areas comes principally from the potential for seabed damage associated with anchoring, and stated that vessels currently lightering in the proposed prohibited areas do not anchor in these areas. However, lightering vessels do drift through these areas if that is where the prevailing winds and currents take them. Industry urged the Coast Guard to allow this practice to continue.

The Coast Guard disagrees. This rule does not prohibit anchoring over or in the vicinity of the prohibited areas. This rulemaking addresses lightering activities and only prohibits these operations. While the Coast Guard acknowledges the detrimental effect anchoring may have in these areas, this rulemaking will prevent anchoring in the prohibited areas only to the extent that such anchoring would have occurred for the purposes of lightering.

The definition of lightering in § 156.205(b) includes all phases of the operation from the beginning of the mooring operation to the departure of the service vessel from the vessel to be lightered. Two catastrophic events which could occur during offshore lightering activities are transit casualties, such as collisions, and intrinsic casualties, such as pump room explosions. Prohibiting lightering activities over biologically active areas will help to prevent a worst case scenario of one or more vessels engaged in lightering operations sinking in these areas while laden with a large quantity of oil. Such an occurrence would be a significant environmental hazard in the most ecologically sensitive offshore regions of the Gulf of Mexico. Figure 1 is a pictorial representation of the lightering zones and prohibited areas.

BILLING CODE 4910–14–P

Designated Lightering Zones and Prohibited Areas in the Gulf of Mexico

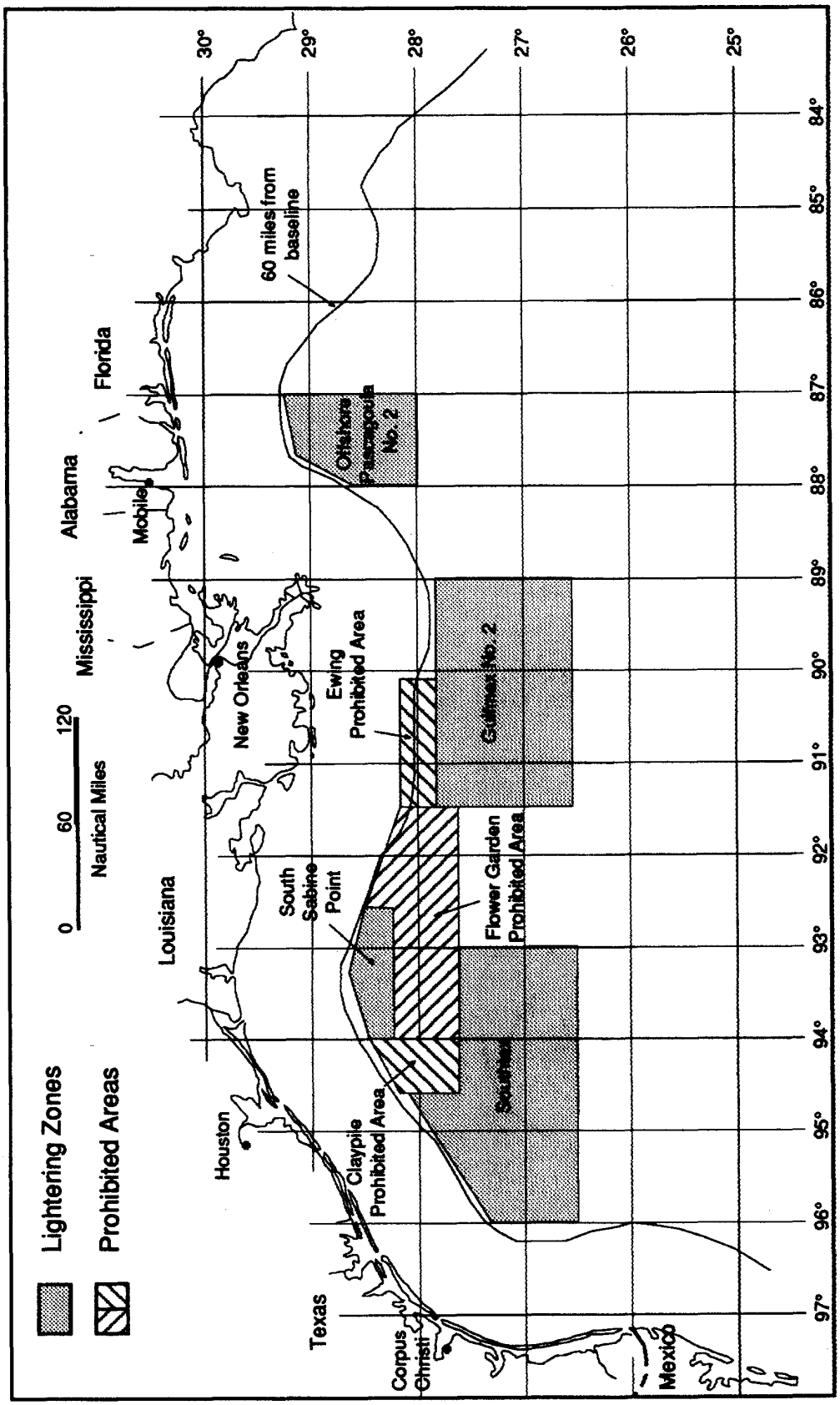

Figure 1

BILLING CODE 4910–14–C

Section 156.320 Minimum Operating Conditions

Six comments were received on this section. Three comments supported the proposed prohibition on beginning lightering when there are 30 knot winds and 10 foot seas in the same direction, but recommended that the operating criteria prohibiting mooring when wind and sea direction vary by 30 degrees be removed because the effects of these factors could not be accurately predicted. Three comments opposed the unmooring requirements, stating that it may be safer to remain moored during some severe weather conditions. One of these comments also noted that this section did not address the situation when the current is counter to the wind, stating that such a condition may make ship to ship transfer impossible even though the speed of the wind may only measure a few knots.

Industry comments questioned the Coast Guard's determination of the weather parameters set in § 156.320. They stated that the proposed conditions exceed those contained in the operating manuals of different lightering companies. This comment stated that § 156.320 should be revised to either eliminate the requirement to unmoor or to increase the proposed operating criteria, noting that it may be dangerous for some vessels to unmoor in the weather conditions proposed and that, except for the most severe weather conditions, it often may be safer to stay moored until the weather abates. They stated that ultimately it should be the decision of the masters of the service vessel and the vessel to be lightered to remain moored or to unmoor, based upon their evaluation of the weather conditions in the operating area and the handling characteristics of their vessels. Industry added that if the Coast Guard is convinced that maximum criteria are necessary, then it should be absolutely certain that it is not asking ships' masters to perform maneuvers that may endanger crew and cargo.

Comments from industry and those from the OCIMF, ICS, and INTERTANKO stated that the lightering provisions regarding hurricanes were too restrictive. They argued that lightering operations can be discontinued quickly, lightering vessels can be disconnected quickly, and lightering personnel should be responsible for monitoring reports from the National Weather Service to determine if lightering operations should proceed.

The Coast Guard has reviewed the provisions of several lightering manuals regarding weather restrictions and the Coast Guard agrees that the decision to unmoor should rest with the masters of the respective vessels. Factors such as stability and structural limitations must be considered in tank vessel loading and ballasting operations. Consequently, to mandate an unmooring criteria for all vessels based solely on factors external to the vessel, such as weather and sea state conditions, would not be prudent. The Coast Guard also agrees that simplifying the weather conditions to consideration of only wind velocity and wave height adequately addresses the weather and sea state conditions which are significant to lightering and are parameters which can be more definitively observed by mariners. Additionally, the Coast Guard has determined that stipulating the maximum criteria under which cargo transfers may be safely conducted is a better approach for environmental and occupational safety reasons. The Coast Guard also agrees that lightering vessels can disconnect relatively quickly and unmoor. Having a maximum wave height and wind speed criteria makes it unnecessary to specifically address hurricane evasion. As previously stated, the master of a vessel is ultimately responsible for the safety of the ship, its crew, and its cargo. Therefore, § 156.320 has been renamed as ''Maximum operating conditions'' and has been revised to remove the proposed restrictions of lightering operations based on relative wind and wave directions and on swell heights, to remove the proposed hurricane restrictions, and to specify a maximum wind velocity and wave height for cargo transfers. Nothing prohibits terminating lightering operations under less severe conditions, and the Coast Guard encourages the development of conservative company policies in this regard.

Section 156.330 Operational Restrictions

Several comments responded to this section of the NPRM. Two comment writers noted that the definition of ''bunkering'' was excluded. Two other commenters also addressed the issue of bunkering. Comments from industry cautioned the Coast Guard against using the rulemaking as a basis for limiting other operations, such as bunkering, which can safely occur during lightering operations, and that any interpretation of the rulemaking which could ban bunkering operations would be unnecessary and unwarranted. The Texas GLO pointed out that the explosion and resultant spill from the tankship FLORIDA EXPRESS in the Gulf of Mexico on February 27, 1995, indicates the need for expanding the scope of the rulemaking to include bunkering activities. It argued that the difference in the threat of an oil spill from bunkering and from lightering is really not distinguishable and that both should be subject to weather, operation, and work hour limitations. It suggested that the Coast Guard propose a rule in the near future to correct this.

Bunkering a large (VLCC or ULCC) crude carrier from another tankship in the offshore environment is not categorized as lightering under current regulations. The definition of lightering in 33 CFR 156.205(b) specifically excludes cargo which is intended only for use as a fuel or lubricant aboard the receiving vessel. The FLORIDA EXPRESS incident is still under investigation, but it is noted that the vessel was not involved in bunkering when the incident occurred. Should a safety issue be identified by the investigation, the Coast Guard may consider regulations specifically for ship to ship bunkering in the future. One primary safety concern when bunkering while also conducting cargo transfer operations is in providing adequate personnel for both operations. Under Coast Guard regulations, tankships are not prohibited from bunkering while also transferring cargo. It would be inconsistent to restrict this activity in offshore lightering zones while allowing its occurrence elsewhere in the Gulf of Mexico and on the inland waters of coastal ports which are in areas much more likely to be affected by oil spills. Paragraph (g) in § 156.330 has been revised to more clearly state that bunkering is not within the definition of lightering.

Five comments at the public meeting recommended that the proposed operational restrictions in paragraphs (h) and (i) of § 156.330, which refer to minimum distances to offshore structures and mobile offshore drilling units (MODUs), be consistent. They noted that the proposed § 156.330(i) requires that lightering operations not be conducted while underway within 3 miles of an offshore structure or MODU, while § 156.330(h) allows lightering operations to be conducted while anchored up to 1 mile from an offshore structure or MODU. They stated that vessels lightering underway maintain a navigation watch and can maneuver, and that there is no compromise to safety by allowing both anchored lightering vessels and vessels lightering underway to operate subject to the 1-mile restriction. They stated that a 1-mile buffer provides adequate protection under present operating

conditions and should be permitted to continue.

The Coast Guard has considered these comments and agrees that the requirement of § 156.330(i) prohibiting underway lightering operations within 3 nautical miles of an offshore structure or MODU is inconsistent with the 1-mile range given in § 156.330(h) for lightering at anchor. The definition for lightering operations in § 156.205(b) includes both drifting and transiting under power while moored alongside. The Coast Guard agrees that the current practice of using 1 nautical mile clearance from offshore structures and MODUs when involved in lightering as defined under § 156.205(b) has provided an adequate margin of safety in the past and agrees that there is insufficient justification to further expand this range. The Coast Guard also acknowledges that, when moored alongside, these vessels typically advance at speeds of less than 4 knots and can adequately maneuver around stationary objects such as production platforms. Therefore, § 156.330(i) has been modified to reflect a 1 nautical mile range for all modes of lightering.

MMS generally supported the provisions of this section, but suggested that it also address pipelines because anchors could rupture a pipeline when the vessels are setting the anchor or dragging the anchor during rough weather. MMS also indicated that the largest spills in the Gulf of Mexico have been from pipelines that were ruptured by anchors.

With reference to pipeline safety, the Coast Guard notes that, since 1992, offshore pipelines have been required to be surveyed annually and reports submitted to the Research and Special Programs Administration (RSPA) by the pipeline operators (49 CFR 195.413). Under current regulations (49 CFR part 190), an offshore pipeline is considered a hazard to navigation only when the top of the pipeline is closer than 12 inches to the seabed in waters less than 15 feet deep. Regardless of whether a pipeline is officially considered a hazard to navigation, the Coast Guard agrees that mariners should not anchor over such structures when their location is known. In order to avoid pipeline damage when anchoring in designated lightering zones, the mariner must rely on charts depicting pipeline locations. Therefore, § 156.330(j) has been revised to provide that, during lightering operations, vessels may not anchor over charted pipelines, artificial reefs, or historical resources.

Additionally, the Norwegian Maritime Administration provided to the Coast Guard preliminary statements which were taken during the investigation of the BERGE BANKER and SKAUBAY collision. These statements indicate that the BERGE BANKER, the vessel to be lightered, and the SKAUBAY, the service vessel, were on nearly reciprocal courses when the collision occurred. Normal practice in the industry is for the vessel to be lightered to maintain a constant heading during the approach by the service ship immediately prior to mooring alongside. The service vessel approaches from astern, generally broad on the quarter, which means that the service ship is aft of the vessel to be lightered on a heading within 45 degrees to port, or 45 degrees to starboard, of the course maintained by the vessel to be lightered. This industry practice is recognized in the Oil Companies International Marine Forum (OCIMF) Ship to Ship Transfer Guide (Petroleum), Second Edition, 1988, as the best approach when preparing to moor alongside. In order to reduce the risk of a similar collision, paragraph (k) has been added to § 156.330 in the final rule mandating this approach and requiring a minimum safe distance of 1000 meters between the two vessels prior to the service vessel being positioned broad on the quarter of the ship to be lightered. The Coast Guard has renamed this section in the final rule as ''Operations''.

Incorporation by Reference

The Director of the Federal Register has approved the material in § 156.111 for incorporation by reference under 5 U.S.C. 552 and 1 CFR part 51. The material is available as indicated in that section.

Assessment

A draft Regulatory Assessment was prepared in support of the NPRM for the designation of lightering zones, which was published in the **Federal Register** on January 5, 1995 (60 FR 1958). An Addendum to that Assessment has been prepared to update statistical data and other information since the publication of the NPRM.

The Addendum indicates that changes which have occurred since the publication of the NPRM do not materially alter the findings and conclusions of the draft Regulatory Assessment which, as amended, are adopted as the findings and conclusions of the Final Regulatory Assessment.

This Final Regulatory Assessment was prepared in accordance with Executive Order 12866. Under the criteria of Executive Order 12866, the designation of lightering zones in the Gulf of Mexico is not a significant regulatory action and will not have a significant economic impact on the maritime industry. However, this rulemaking is significant under the regulatory policies and procedures of the Department of Transportation (44 FR 11040; February 26, 1979) and has been reviewed by the Office of Management and Budget (OMB). The Regulatory Assessment is available in the docket for inspection or copying where indicated under **ADDRESSES**.

Small Entities

Adoption of this final rule will avert adverse small entity impacts and preserve the current revenues derived by small entities from tanker lightering in the Gulf of Mexico, and the adverse impact of this final rule on small business is expected to be minimal. Therefore, the Coast Guard certifies under section 605(b) of the Regulatory Flexibility Act (5 U.S.C. 601 *et seq.*) that this rule will not have a significant economic impact on a substantial number of small entities.

Collection of Information

This rule contains no new collection-of-information requirements or additions to currently approved information collections under the Paperwork Reduction Act (44 U.S.C. 3501 *et seq.*). The sections in this rule that contain collection-of-information requirements are §§ 156.110 and 156.215 which are approved under OMB Control Numbers 2115–0096 and 2115–0539 respectively.

Federalism

The Coast Guard has analyzed this rule under the principles and criteria contained in Executive Order 12612 and has determined that this rule does not have sufficient federalism implications to warrant the preparation of a Federalism Assessment.

Environment

The Coast Guard considered the environmental impact of this rule and concluded that preparation of an Environmental Impact Statement is not necessary. An Environmental Assessment and a Finding of No Significant Impact are available in the docket for inspection or copying as indicated under **ADDRESSES**.

The Environmental Assessment considered, among other things, the factors set out in 33 CFR 156.230: traditional use of the area for lightering; weather and sea conditions; water depth; proximity to shipping lanes, vessel traffic schemes, anchorages, fixed structures, designated marine sanctuaries, fishing areas, and designated units of the National Park

System, National Wild and Scenic Rivers System, National Wilderness Preservation System, properties included on the National Register of Historic Places and National Registry of Natural Landmarks, and National Wildlife Refuge System; and other relevant safety, environmental, and economic data. The Coast Guard also specifically looked at wildlife and marine habitats and topographic features in the proposed lightering zones.

The topographic features of the Gulf of Mexico considered during this rulemaking include areas on the offshore banks where reef-building activity occurs. These reefs support diverse communities of marine plant and animal species in large numbers. The following areas are of particular concern: the East and West Flower Gardens, 32 Fathom Bank, Coffee Lump, Claypile Bank, Stetson Bank, Hospital Bank, North Hospital Bank, Sackett Bank, Diaphus Bank, Fishnet Bank, and Sweet Bank. These areas are charted and are considered sensitive ecosystems. These areas are particularly vulnerable to damage from anchoring and, to a lesser extent, from oil spills. While oil spills on the surface of these areas are not expected to have a significant effect on the biota of concern, the Coast Guard is establishing three ''prohibited areas'' where lightering will not be permitted. Establishment of ''prohibited areas'' over these features will further ensure protection of these vital ecosystems. Operational restrictions for designated lightering zones would also reduce the likelihood of spillage from the tank vessels utilizing these zones. Although the likelihood is remote, the Coast Guard is also concerned with catastrophic casualties which could result in the sinking of a tanker. The potential sinking of a very large or ultra large crude carrier as a result of a collision or intrinsic casualty, with millions of barrels of oil on board or as cargo, could pose a serious long term environmental hazard to these ecosystems.

The Endangered Species Act of 1973 (16 U.S.C. 1531 through 1543), as amended, seeks to protect endangered and threatened species and the ecosystems on which they depend. The Act is administered by the Fish and Wildlife Service (FWS) and the National Marine Fisheries Service (NMFS). Several protected marine species (e.g., Right whales, Kemp's Ridley sea turtles, and hawksbill turtles) are located throughout the Gulf region.

The Coast Guard consulted with the regional NMFS office in St. Petersburg, Florida, and the FWS regional offices in Alberquerque, New Mexico, and Atlanta, Georgia, regarding the effect of the proposed regulations on endangered and threatened species as well as on sensitive environmental areas such as wildlife refuges. Both the NMFS and FWS have issued a written concurrence with the Coast Guard's finding that the proposed rule, including the designation of the South Sabine Point lightering zone discussed in the preamble of the NPRM, will not have an adverse effect on endangered or threatened species.

''Historic property'' or ''historic resources'' are defined under the National Historic Preservation Act (16 U.S.C. 470w) as prehistoric or historic sites, buildings, structures, or objects. This definition includes shipwrecks registered with the National Register of Historic Places. There are no known historical properties or resources in the lightering zones.

Military warning areas are located throughout the Gulf of Mexico and are clearly demarcated. The coordinates of the designated lightering zones will overlap Eglin Water Test Areas One and Three (EWTA 1, EWTA 3), and Military Warning Areas 92, 228, and 602 (W–92, W–228, W–602). Military operations are undertaken in each of these zones and have been considered in this rulemaking. Lightering operations have been conducted throughout the Gulf of Mexico for many years, often within these designated military zones. Lightering industry spokespersons report that they have never been asked by a military department to divert operations due to military exercises. Announcements for most military exercises are published in notices to mariners. The Department of Defense commands responsible for these warning areas were advised of the proposed rulemaking and have expressed no opposition to the establishment of these lightering zones. The Coast Guard does not expect the missions of these military warning areas to be adversely impacted by this rulemaking.

The Coast Guard has considered the implications of the Coastal Zone Management Act (16 U.S.C. 1451, *et seq.*) with regard to this rulemaking. Under this Act, the Coast Guard must determine whether the activities proposed by it are consistent with activities covered by a federally approved coastal zone management plan for each state which may be affected by this federal action. The States of Louisiana, Mississippi, Florida, and Alabama have federally approved coastal zone management plans. The Governor of the State of Texas has withdrawn its submission of the proposed Texas Coastal Management Plan to NOAA.

The Coast Guard has determined that the designation of lightering zones, as provided in this rulemaking, will have no effect on the coastal zones of Mississippi, Alabama, or Florida. Designation of the lightering zones has the potential of an indirect effect on the coastal zones of Louisiana and Texas.

The approved plan for Louisiana regulates a number of listed uses which ''directly and substantially affect coastal waters and which are in need of coastal management, and which have impacts of greater than local significance or which significantly affect interests of regional, state, or national concerns.'' (La. Rev. Stat. 49:213.5(A)(1)). Louisiana has not listed the designation of offshore lightering zones as an activity subject to state review, and research and review of environmental effects indicate only a slight chance that these regulations would indirectly affect the coastal zone of Louisiana.

The Coast Guard consulted with the State of Louisiana after it had an opportunity to review the NPRM, Environmental Assessment, and draft Regulatory Assessment. The Administrator of the State Coast Management Division for Louisiana responded by a letter in which the Administrator stated that this rulemaking may affect the Louisiana coastal zone and requested that the Coast Guard make a consistency determination. The Coast Guard found that the regulations in the NPRM were consistent, to the maximum extent practicable, with the enforceable policies of the federally approved coastal zone management plan and submitted a consistency determination to that effect. The State Administrator responded, concurring with the Coast Guard consistency determination that establishing lightering zones would be consistent with the Louisiana Coastal Resource Program.

Also, during the preparation of this assessment, the Coast Guard informally contacted the Environmental Section of the Texas GLO's Legal Services Division, providing the NPRM, Environmental Assessment, and draft Regulatory Assessment for review. The State had recently approved a Coastal Management Plan and had submitted the Plan for federal approval. The Oil Spill Prevention and Response Division of the Texas GLO responded, informing the Coast Guard that it supports the Coast Guard's plan to establish four lightering zones and that the Governor of Texas has withdrawn the submission of the Texas Coastal Management Plan

to NOAA. It presently is unclear whether Texas will participate in the federal coastal zone management program. The Coast Guard's research and review of environmental effects indicate only a low probability that these regulations would indirectly affect the coastal zone of Texas.

Five comments specifically addressed items in the Environmental Assessment. The Fish and Wildlife Service concurred that the South Sabine Point and Southtex lightering zones are not likely to have a negative impact on marine species (sea turtles and coastal birds that use the Texas coastline) for which it is responsible. Another comment argued that the Environmental Assessment and the text of the NPRM do not substantiate the need for the proposed extensive prohibited areas. Two comments agreed with the Environmental Assessment's discussion of the dangers of anchoring. However, these comments also stated that section 5.5 of the Environmental Assessment, ''Endangered and Threatened Species'', needs clarification. The comments contend that this section indicates that there is an extremely low probability that spillage would contact an environmental resource, yet upon reviewing the Environmental Assessment, the commenter reasons that spills making land impact would cross over the prohibited areas. For clarification, the reference to contact with environmental resources used in the Environmental Assessment has been revised to specify land-based environmental resources in that particular section.

A fifth comment stated that the Environmental Assessment appeared to be based on crude oil demand and imports remaining constant. Instead, the Environmental Assessment should assume at least a 4 percent per annum increase in crude oil imports with a concomitant increase in transfer by lightering.

The Environmental Assessment for this rulemaking addressed the environmental considerations required under National Environmental Policy Act (NEPA). The Environmental Assessment discussed the environmental effects of creating these lightering zones versus taking a no action alternative and not designating these lightering zones. The Environmental Assessment also states that this rulemaking alone is not expected to significantly effect the volume of oil lightered. The Environmental Assessment supports a Finding of No Significant Impact and shows that, by establishing these lightering zones, there exists a possibility that a portion of current and future lightering activity could be conducted at locations further offshore that pose less of an environmental threat than would otherwise occur.

Also, the Final Regulatory Assessment for this rulemaking considered 1994 waterborne oil import data. This data reflected an increase in U.S. oil imports from 6.8 million barrels per day (BPD) in 1993 to 7.0 million BPD in 1994. Yet, in contrast to this 0.2 million BPD increase in importation, offshore lightering's share of imports by water in the Gulf of Mexico declined from 32.0 percent in 1993 to 28.5 percent in 1994. In terms of volume, this corresponded to a decrease from 1.48 million BPD to 1.30 million BPD in 1994. This decline in demand for lightering was due to shifts from Arabian Gulf and West African supplies to closer Caribbean supplies. These closer supplies are generally transported in smaller tankers which are able to make direct deliveries, negating the need for lightering. The Regulatory Assessment shows that the small shifts in sources of origin which occurred in 1994 entailed a significant reduction in the distance transported, and consequently, the type of tanker used for its conveyance. This one example of cause and effect illustrates that the demand for offshore lightering is driven by many market factors which are unrelated to this rulemaking.

Clean Air Act

As stated in the NPRM, volatile organic compound (VOC) air emissions result from the operation of ship engines and from oil transfers, such as the lightering of oil from one vessel to another. Also, nitrogen oxides (NOX) are produced by ship engines. Both VOC and NOX are precursors of the National Ambient Air Quality Standards' (NAAQS) criteria pollutant ozone. However, since this rulemaking is not expected to materially affect the frequency or volume of oil currently transferred in the Gulf of Mexico, the designation of lightering zones should not lead to a net increase in air emissions.

The NPRM also noted that the NAAQS, promulgated by the Environmental Protection Agency (EPA) pursuant to the Clean Air Act (CAA) (42 U.S.C. 7401 *et seq.*), provide benchmarks against which air quality is gauged. Those areas within a state's borders which do not attain the NAAQS (nonattainment areas) are subject to controls aimed at improving the air quality. Federal agencies taking actions in nonattainment or maintenance areas which would result in air emissions must make determinations of conformity with the applicable controls, usually a State Implementation Plan (SIP), before acting. However, the lightering zones created by this rule are well outside the boundaries of the coastal states (more than 60 nautical miles from the baseline for the territorial sea) and, therefore, are outside any nonattainment or maintenance areas. Thus, by the terms of 40 CFR part 51, the conformity rule is not applicable to this rulemaking.

The Breton Wilderness Area is 112 nautical miles north of the Gulfmex No. 2 lightering zone and 67 nautical miles northwest of the Offshore Pascagoula No. 2 lightering zone. Between the two lightering zones and the Breton Wilderness Area are two transshipment areas (TSAs). Offshore Pascagoula TSA (39 nautical miles south of Mobile Point, Alabama) is located midway between the Breton Wilderness Area and the Offshore Pascagoula No. 2 lightering zone. Gulfmex No. 1 TSA (105 nautical miles south of Breton Wilderness Area) is located 7 nautical miles northeast of the Gulfmex No. 2 lightering zone. Both of these TSAs are sites of ongoing lightering operations.

Lightering is a traditional, well-established activity which occurs in a variety of near shore areas in the Gulf of Mexico. This rulemaking is not expected to materially affect the frequency or volume of oil transferred in the Gulf of Mexico. Thus, the designated lightering zones will not lead to a net increase in emissions. Moreover, to the extent that these lightering zones are used for oil transfer operations, it is expected that the practical effects of this rulemaking will be to facilitate transfers farther offshore than would otherwise occur. Since transfer operations are not practical nor economical outside 200 nautical miles, tankers limited to using these lightering zones would be expected to effectively reduce the lightering activity that would otherwise occur at the closer near shore areas currently used for lightering.

The Coast Guard considered the FWS comments regarding air quality and, for the reasons noted above, has concluded that the impact of these regulations, if any, will be to increase, on average, the separation between the location of lightering transfers and the Brenton Wilderness Area.

The Coast Guard also notes that its authority does not include the regulation of vessel air emissions for the purposes of improving air quality. Furthermore, in its NPRM proposing Federal Standards for Marine Tank Vessel Loading and Unloading (59 FR 25004, May 13, 1994), EPA stated that those proposed regulations would not

apply to offshore lightering but that EPA might consider addressing offshore lightering operations as a separate source category in the future.

As discussed in the Environmental Assessment, this rulemaking is expected to have no significant effect on any State's attainment of air quality standards.

List of Subjects in 33 CFR Part 156

Hazardous substances, Oil pollution, Reporting and recordkeeping requirements, Water pollution control.

For the reasons set out in the preamble, the Coast Guard amends 33 CFR part 156 as follows:

PART 156—OIL AND HAZARDOUS MATERIAL TRANSFER OPERATIONS

1. The authority citation for part 156 is revised to read as follows:

Authority: 33 U.S.C. 1231, 1321(j)(1) (C) and (D); 46 U.S.C. 3703a. Subparts B and C are also issued under 46 U.S.C. 3715.

2. In § 156.110, the introductory text of paragraph (a) is revised to read as follows:

§ 156.110 Exemptions.

(a) The Chief, Office of Marine Safety, Security and Environmental Protection, acting for the Commandant, may grant an exemption or partial exemption from compliance with any requirement in this part, and the District Commander may grant an exemption or partial exemption from compliance with any operating condition or requirement in subpart C of this part, if:

* * * * *

3. Section 156.111 is added to read as follows:

§ 156.111 Incorporation by reference.

(a) Certain material is incorporated by reference into this part with the approval of the Director of the Federal Register under 5 U.S.C. 552(a) and 1 CFR part 51. To enforce any edition other than that specified in paragraph (b) of this section, the Coast Guard must publish notice of the change in the **Federal Register**; and the material must be available to the public. All approved material is available for inspection at the Office of the Federal Register, 800 North Capitol Street, NW., suite 700, Washington, DC, and at the U.S. Coast Guard, Marine Environmental Protection Division (G–MEP), room 2100, 2100 Second Street, SW, Washington, DC 20593–0001 and is available from the sources indicated in paragraph (b) of this section.

(b) The material approved for incorporation by reference in this part and the sections affected are as follows:

Oil Companies International Marine Forum (OCIMF)

15th Floor, 96 Victoria Street, London SW1E 5JW, England.

Ship to Ship Transfer Guide (Petroleum), Second Edition, 1988—156.330.

International Chamber of Shipping

12 Carthusian Street, London EC1M 6EB, England.

Guide to Helicopter/Ship Operations, Third Edition, 1989—156.330.

4. Section 156.200 is revised to read as follows:

§ 156.200 Applicability.

This subpart applies to each vessel to be lightered and each service vessel engaged in a lightering operation in the marine environment beyond the baseline from which the territorial sea is measured when the oil or hazardous material lightered is destined for a port or place subject to the jurisdiction of the U.S. This subpart does not apply to lightering operations involving public vessels, or to the dedicated response vessels and vessels of opportunity in accordance with the National Contingency Plan (40 CFR parts 9 and 300) when conducting response activities. These rules are in addition to the rules of subpart A of this part, as well as the rules in the applicable sections of parts 151, 153, 155, 156, and 157 of this chapter.

5. In § 156.205, paragraph (a) and the introductory text to paragraph (b) are revised, and the definition of ''work'' is added in alphabetical order to read as follows:

§ 156.205 Definitions.

(a) In addition to the terms defined in this section, the definitions in § 154.105 of this chapter apply to this subpart and to subpart C.

(b) As used in this subpart and subpart C:

* * * * *

Work includes any administrative duties associated with the vessel whether performed on board the vessel or onshore.

6. In § 156.210, paragraph (d) is added to read as follows:

§ 156.210 General.

* * * * *

(d) On vessels conducting lightering operations in a designated lightering zone, a licensed individual or seaman may not work, except in an emergency or a drill, more than 15 hours in any 24-hour period, or more than 36 hours in any 72-hour period, including the 24-hour and 72-hour periods prior to commencing lightering operations.

7. In § 156.215, paragraph (d) is added to read as follows:

§ 156.215 Pre-arrival notices.

* * * * *

(d) In addition to the other requirements in this section, the master, owner, or agent of a vessel that requires a Tank Vessel Examination (TVE) or other special Coast Guard inspection in order to lighter in a designated lightering zone must request the TVE or other inspection from the cognizant Captain of the Port at least 72 hours prior to commencement of lightering operations.

8. In part 156, a new subpart C is added to read as follows:

Subpart C—Lightering Zones and Operational Requirements for the Gulf of Mexico

Sec.
156.300 Designated lightering zones.
156.310 Prohibited areas.
156.320 Maximum operating conditions.
156.330 Operations.

§ 156.300 Designated lightering zones.

The following lightering zones are designated in the Gulf of Mexico and are more than 60 miles from the baseline from which the territorial sea is measured:

(a) *Southtex—lightering zone.* This lightering zone and the geographic area for this zone are coterminous and consist of the waters bounded by a line connecting the following points beginning at:

Latitude N.	*Longitude W.*
27°40′00″,	93°00′00″, thence to
27°40′00″,	94°35′00″, thence to
28°06′30″,	94°35′00″, thence to
27°21′00″,	96°00′00″, thence to
26°30′00″,	96°00′00″, thence to
26°30′00″,	93°00′00″, and thence to the point of beginning.

(NAD 83)

(b) *Gulfmex No. 2—lightering zone.* This lightering zone and the geographic area for this zone are coterminous and consist of the waters bounded by a line connecting the following points beginning at:

Latitude N.	*Longitude W.*
27°53′00″,	89°00′00″, thence to
27°53′00″,	91°30′00″, thence to
26°30′00″,	91°30′00″, thence to
26°30′00″,	89°00′00″, and thence to the point of beginning.

(NAD 83)

(c) *Offshore Pascagoula No. 2—lightering zone.* This lightering zone and the geographic area for this zone are coterminous and consist of the waters bounded by a line connecting the following points beginning at:

Latitude N.	*Longitude W.*
29°20′00″,	87°00′00″, thence to
29°12′00″,	87°45′00″, thence to
28°39′00″,	88°00′00″, thence to
28°00′00″,	88°00′00″, thence to
28°00′00″,	87°00′00″, and thence to the point of beginning.

(NAD 83)

(d) *South Sabine Point—lightering zone.* This lightering zone and the geographic area for this zone are coterminous and consist of the waters bounded by a line connecting the following points beginning at:

Latitude N.	*Longitude W.*
28°30′00″,	92°38′00″, thence to
28°44′00″,	93°24′00″, thence to
28°33′00″,	94°00′00″, thence to
28°18′00″,	94°00′00″, thence to
28°18′00″,	92°38′00″, and thence to the point of beginning.

(NAD 83)

§ 156.310 Prohibited areas.

Lightering operations are prohibited within the following areas in the Gulf of Mexico:

(a) *Claypile—prohibited area.* This prohibited area consists of the waters bounded by a line connecting the following points beginning at:

Latitude N.	*Longitude W.*
28°15′00″,	94°35′00″, thence to
27°40′00″,	94°35′00″, thence to
27°40′00″,	94°00′00″, thence to
28°33′00″,	94°00′00″, and thence to the point of beginning.

(NAD 83)

(b) *Flower Garden—prohibited area.* This prohibited area consists of the waters bounded by a line connecting the following points beginning at:

Latitude N.	*Longitude W.*
27°40′00″,	94°00′00″, thence to
28°18′00″,	94°00′00″, thence to
28°18′00″,	92°38′00″, thence to
28°30′00″,	92°38′00″, thence to
28°15′00″,	91°30′00″, thence to
27°40′00″,	91°30′00″, and thence to the point of beginning.

(NAD 83)

(c) *Ewing—prohibited area.* This prohibited area consists of the waters bounded by a line connecting the following points beginning at:

Latitude N.	*Longitude W.*
27°53′00″,	91°30′00″, thence to
28°15′00″,	91°30′00″, thence to
28°15′00″,	90°10′00″, thence to
27°53′00″,	90°10′00″, and thence to the point of beginning.

(NAD 83)

§ 156.320 Maximum operating conditions.

Unless otherwise specified, the maximum operating conditions in this section apply to tank vessels operating within the lightering zones designated in this subpart.

(a) A tank vessel shall not attempt to moor alongside another vessel when either of the following conditions exist:

(1) The wind velocity is 56 km/hr (30 knots) or more; or

(2) The wave height is 3 meters (10 feet) or more.

(b) Cargo transfer operations shall cease and transfer hoses shall be drained when—

(1) The wind velocity exceeds 82 km/hr (44 knots); or

(2) Wave heights exceed 5 meters (16 feet).

§ 156.330 Operations.

(a) Unless otherwise specified in this subpart, or when otherwise authorized by the cognizant Captain of the Port (COTP) or District Commander, the master of a vessel lightering in a zone designated in this subpart shall ensure that all officers and appropriate members of the crew are familiar with the guidelines in paragraphs (b) and (c) of this section and that the requirements of paragraphs (d) through (l) of this section are complied with.

(b) Lightering operations should be conducted in accordance with the Oil Companies International Marine Forum Ship to Ship Transfer Guide (Petroleum), Second Edition, 1988, to the maximum extent practicable.

(c) Helicopter operations should be conducted in accordance with the International Chamber of Shipping Guide to Helicopter/Ship Operations, Third Edition, 1989, to the maximum extent practicable.

(d) The vessel to be lightered shall make a voice warning prior to the commencement of lightering activities via channel 13 VHF and 2182 Khz. The voice warning shall include:

(1) The names of the vessels involved;

(2) The vessels' geographical positions and general headings;

(3) A description of the operations;

(4) The expected time of commencement and duration of the operation; and

(5) Request for wide berth.

(e) In the event of a communications failure between the lightering vessels or the respective persons-in-charge of the transfer, or an equipment failure affecting the vessel's cargo handling capability or ship's maneuverability, the affected vessel shall suspend lightering activities and shall sound at least five short, rapid blasts on the vessel's whistle. Lightering activities shall remain suspended until corrective action has been completed.

(f) No vessel involved in a lightering operation may open its cargo system until the servicing vessel is securely moored alongside the vessel to be lightered.

(g) If any vessel not involved in the lightering operation or support activities approaches within 100 meters of vessels engaged in lightering, the vessel engaged in lightering shall warn the approaching vessel by sounding a loud hailer, ship's whistle, or any other appropriate means.

(h) Only a lightering tender, a supply boat, or a crew boat, equipped with a spark arrestor on its exhaust, or a tank vessel providing bunkers, may moor alongside a vessel engaged in lightering operations.

(i) Lightering operations shall not be conducted within 1 nautical mile of offshore structures or mobile offshore drilling units.

(j) No vessel engaged in lightering activities may anchor over charted pipelines, artificial reefs, or historical resources.

(k) All vessels engaged in lightering activities shall be able to immediately maneuver at all times while inside a designated lightering zone. The main propulsion system must not be disabled at any time.

(l) In preparing to moor alongside the vessel to be lightered, a service vessel shall not approach the vessel to be lightered closer than 1000 meters unless the service vessel is positioned broad on the quarter of the vessel to be lightered. The service vessel must transition to a nearly parallel heading prior to closing to within 50 meters of the vessel to be lightered.

Dated: August 22, 1995.

A.E. Henn,

Vice Admiral, U.S. Coast Guard, Acting Commandant.

[FR Doc. 95–21292 Filed 8–28–95; 8:45 am]

BILLING CODE 4910–14–P

federal register

Tuesday
August 29, 1995

Part VI

Department of the Interior

Fish and Wildlife Service

50 CFR Part 20

Migratory Bird Hunting; Final Frameworks for Early-Season Migratory Bird; Final Rule

DEPARTMENT OF THE INTERIOR

Fish and Wildlife Service

50 CFR Part 20

RIN 1018-AC79

Migratory Bird Hunting; Final Frameworks for Early-Season Migratory Bird Hunting Regulations

AGENCY: Fish and Wildlife Service, Interior.

ACTION: Final rule.

SUMMARY: This rule prescribes final early-season frameworks from which States, Puerto Rico, and the Virgin Islands may select season dates, limits, and other options for the 1995-96 migratory bird hunting seasons. Early seasons are those which generally open prior to October 1. The effect of this final rule is to facilitate the selection of hunting seasons by the States and Territories to further the annual establishment of the early-season migratory bird hunting regulations. These selections will be published in the **Federal Register** as amendments to §§ 20.101 through 20.107, and § 20.109 of title 50 CFR part 20.

EFFECTIVE DATE: This rule takes effect on August 29, 1995.

ADDRESSES: Season selections from States and Territories are to be mailed to: Chief, Office of Migratory Bird Management, U.S. Fish and Wildlife Service, Department of the Interior, ms 634—ARLSQ, 1849 C Street, NW., Washington, DC 20240. Comments received are available for public inspection during normal business hours in room 634, Arlington Square Building, 4401 N. Fairfax Drive, Arlington, Virginia.

FOR FURTHER INFORMATION CONTACT: Paul R. Schmidt, Chief, Office of Migratory Bird Management, U.S. Fish and Wildlife Service, (703) 358-1714.

SUPPLEMENTARY INFORMATION:

Regulations Schedule for 1995

On March 24, 1995, the Service published for public comment in the **Federal Register** (60 FR 15642) a proposal to amend 50 CFR part 20, with comment periods ending July 21, 1995, for early-season proposals and September 4, 1995, for late-season proposals. On June 16, 1995, the Service published for public comment a second document (60 FR 31890) which provided supplemental proposals for early- and late-season migratory bird hunting regulations frameworks.

On June 22, 1995, a public hearing was held in Washington, DC, as announced in the March 24 and June 16 **Federal Registers** to review the status of migratory shore and upland game birds. Proposed hunting regulations were discussed for those species and for other early seasons.

On July 21, 1995, the Service published in the **Federal Register** (60 FR 37754) a third document in the series of proposed, supplemental, and final rulemaking documents which dealt specifically with proposed early-season frameworks for the 1995-96 season. This document also extended the public comment period to July 31, 1995, for early-season proposals. This rulemaking is the fourth in the series, and establishes final frameworks for early-season migratory bird hunting regulations for the 1995-96 season.

Review of Public Comments and the Service's Response

As of August 1, 1995, the Service had received 25 written comments; 6 of these specifically addressed early-season issues. The Service also received recommendations from all four Flyway Councils. Early-season comments are summarized and discussed in the order used in the March 24 **Federal Register**. Only the numbered items pertaining to early seasons for which comments were received are included.

General

Public Hearing Comments: Mr. Charles D. Kelley, representing the Southeastern Association of Fish and Wildlife Agencies, commended the Service for its management of migratory bird resources. He also indicated that the conservative thought used by the Service in the development of annual migratory bird hunting regulations was shared by the States. As a result of this conservative thought, he reiterated the Service's findings that declines seen in most game species were tied to habitat practices.

Mr. George Vandel, representing the Central Flyway Council and the South Dakota Game Fish and Parks Department, made some preliminary remarks regarding the status of this year's duck breeding populations and nesting conditions in South Dakota. He indicated that this spring's total breeding population was at a high level, with many species at record high levels. He further indicated that many factors contributed to this recovery, including improved precipitation patterns, availability of Conservation Reserve Program lands with high quality nesting cover, and the success of cooperative management programs such as those under the North American Waterfowl Management Plan.

Written Comments: The Humane Society of the United States (Humane Society) recommended that all seasons open at noon, mid-week, to reduce the large kills associated with the traditional Saturday openings. They also recommend that hunting during the one-half hour before sunrise be eliminated and that wounded but unretrieved birds count towards the daily bag limit.

1. Ducks

The categories used to discuss issues related to duck harvest management are as follows: (A) General Harvest Strategy, (B) Framework Dates, (C) Season Length, (D) Closed Seasons, (E) Bag Limits, (F) Zones and Split Seasons, and (G) Special Seasons/Species Management. Only those categories containing substantial recommendations are included below.

G. Special Seasons/Species Management

i. September Teal Seasons

Council Recommendations: The Central Flyway Council recommended that the September teal season in the Central Flyway be increased from 9 to 16 days.

Written Comments: An individual from Texas expressed support for the Central Flyway's recommendation to expand the teal season to 16 days. Stating that the early teal season is important for Texas hunter opportunities, he believed that the season could be expanded without harm to the resource.

Service Response: A body of information exists regarding September teal seasons as currently structured; however, there is little information to address the potential impacts of 7 days added to the current season. The Service previously determined in the ''Supplemental Environmental Impact Statement: Issuance of Annual Regulations Permitting the Sport Hunting of Migratory Birds (SEIS 88)'' that proposals for expansion of existing special regulations require a comprehensive evaluation plan containing study objectives, experimental design, decision criteria, and identification of data needs. The Central Flyway's proposal does not contain such a plan and is therefore inconsistent with SEIS 88. Any large-scale expansion of the September teal season, such as that recommended by the Central Flyway Council, likely will require a complete evaluation of the

entire season in all areas where the teal season is currently offered. Future consideration by the Service of such a proposal, and accompanying evaluation plan, will also include a review of manpower and funding requirements as well as priority ranking relative to other proposals and programs.

3. Sea Ducks

Written Comments: The Humane Society recommends that this season should be either closed or severely restricted until more complete information on biology and population status is available. They repeat their concern regarding seasons and limits on sea ducks which are deemed too liberal, considering the quality and quantity of data on population status and trends, and recommend reductions in those regulations.

Service Response: The Service continues to be concerned about the status of sea ducks and the potential impact that increased hunting activity could have on these species. While there is no special season on sea ducks in the Pacific Flyway, Alaska has a sea duck limit that is additional to the limit on other ducks. In recognition of the need for additional information on these species, the Service prepared a report in June of 1993 on sea duck and merganser hunting seasons, status, and harvests in Alaska and the Pacific Flyway coastal States. This document was prepared for use by the Service and the Pacific Flyway Council in evaluating the effects of these seasons on these ducks. In the Atlantic Flyway, a report describing the status of sea ducks in that portion of the contient was completed in April of 1994. Cooperative efforts are ongoing to summarize additional information on sea ducks; however, the Service continues to emphasize the importance of completing the sea duck management plan. Furthermore, the Service considers improvements in survey capabilities for these species to be extremely important for future management actions. In 1993, the Service reduced bag limits on scoters from 7 to 4 within an overall 7-bird sea duck limit. The Service will continue to monitor these species and notes that further harvest restrictions may be necessary.

4. Canada Geese

A. Special Seasons

Council Recommendations: The Atlantic Flyway Council recommended that Delaware and Rhode Island be permitted to initiate a 3-year experimental resident Canada goose season with framework dates of September 1 to 15.

The Atlantic Flyway Council also recommended that Massachusetts, New Jersey, New York, North Carolina, Pennsylvania, and Virginia be permitted to expand the hunt areas of their experimental goose seasons.

In North Carolina, the Atlantic Flyway Council requested that the framework date for the experimental resident Canada goose season in the Northeast hunt area be September 1 to 20.

The Upper-Region Regulations Committee of the Mississippi Flyway Council recommended modification of the early Canada goose season criteria to allow any State to conduct a non-experimental special season between the dates of September 1 and 15. The Committee recommended that States continue monitoring hunter activity and success until they begin participation in the Harvest Information Program and close areas where evidence from band recoveries or other sources indicated unacceptable (greater than 10 percent) harvest of non-target populations of concern. Special seasons occurring after September 15 would be required to meet all existing Service criteria for special resident Canada goose seasons and would not be altered in any way during the 3-year experimental period.

If the above modifications to the special-season criteria are not approved, the Upper-Region Regulations Committee recommended the following experimental special seasons:

In Indiana, a Statewide season during September 1 to 15.

In Illinois, a season in the nine northeast counties of the State during September 9 to 18.

In Wisconsin, expand the size of the Southeastern Zone for a September 1 to 13 season.

The Lower-Region Regulations Committee of the Mississippi Flyway Council recommended that the flyway-wide framework for special resident giant Canada goose seasons be September 1 to 15 where areas of concern do not exist.

In Tennessee, the Lower-Region Regulations Committee of the Mississippi Flyway Council recommended that the zone for the special resident Canada goose season in east Tennessee be expanded from 11 to 28 counties, east of and including Anderson, Campbell, Hamilton, Rhea, and Roane Counties. The Committee also recommended that Tennessee be permitted to hold a special September Canada goose season in the Kentucky/Barkley Lakes Zone in west Tennessee.

The Pacific Flyway Council requested modification of the early Canada goose seasons criteria to allow any State to conduct a season between the dates of September 1 and 15 for a 3-year experimental period. The Council recommended that States continue monitoring hunter activity and success until they begin participation in the Harvest Information Program and close areas where evidence from band recoveries or other sources indicated unacceptable (greater than 10 percent) harvest of non-target populations of concern. Special seasons occurring after September 15 would be required to meet all existing Service criteria for special Canada goose seasons and would not be altered in any way during the 3-year experimental period.

The Pacific Flyway Council recommended continuation of the early September Canada goose season in southwestern Wyoming and that an experimental hunt be allowed in Teton County, Wyoming, where it would be by State permit (no more than 40 permits may be issued) with framework dates of September 1 to 15 and a maximum limit of 2 Canada geese permitted per season.

The Pacific Flyway Council subsequently recommended for all September Canada goose seasons in Oregon and Washington that the framework dates be September 1-15 and daily bag limits be 3 Canada geese.

Written Comments: The Illinois Department of Conservation supported the Service's proposal to allow September 1 to 15 Canada goose seasons without requiring the data collection necessary under the Service's special Canada goose season criteria. They noted that this would free States from the constraints of gathering data, which can be difficult and expensive to obtain, and would allow greater management flexibility. Further, believing that the lack of harvest of migrants during these special seasons has been documented, they stated that these special seasons are an important component of their urban/suburban goose programs.

Service Response: The Service has reviewed the existing information from experimental special early Canada goose seasons and has concluded that the proposed modifications will meet the established criteria while reducing the cost and administrative burden of these seasons; however, the Service reaffirms its previously stated commitment to target these special seasons at locally breeding and/or nuisance Canada goose populations that nest primarily in the conterminous United States. The Service proposes to modify the criteria for special Canada goose seasons to

permit States to chose one of two options for these special seasons:

Option 1: States (except Alaska and Hawaii) may hold a special early Canada goose season of up to 15 days between September 1-15. Such a season must receive Flyway Council endorsement prior to the establishment of federal frameworks, and States must agree to close any areas to hunting where evidence from band recoveries or other sources indicates unacceptable (greater than 10%) harvest of non-target populations during the special season. The Counties of Tuscola, Huron and Saginaw in Michigan are not eligible for this option because evidence of excessively high harvests of Southern James Bay Canada geese was obtained in a previous experimental evaluation. Additionally, because of evidence suggesting early-arriving migrant Canada geese, the special early Canada goose season in the Upper Peninsula of Michigan cannot extend beyond September 10.

Option 2: States may hold a special early Canada goose season that would include dates after September 15, except in those areas identified in Option 1. Such a season would be subject to all data-gathering, monitoring and reporting requirements in the special-season criteria. Additionally, such a season would not be subject to any modification during the experimental period.

The Service also proposes that when the criteria for special Canada goose seasons are modified, no additional modifications will be considered for at least 5 years, to allow sufficient time for evaluation of cumulative impacts.

The special-season criteria, including the modifications indicated above, are shown below:

Criteria for Special Canada Goose Seasons

1. States may hold special Canada goose seasons, in addition to their regular seasons, for the purpose of controlling local breeding populations or nuisance geese. These seasons are to be directed only at Canada goose populations that nest primarily in the conterminous United States and must target a specific population of Canada geese. The harvest of nontarget Canada geese must not exceed 10 percent of the special-season harvest during early seasons or 20 percent during late seasons. More restrictive proportions may apply in instances where a nontarget Canada goose population of special concern is involved.

2. Early seasons must be held prior to the regular season.

3. Late seasons must be held after the regular season but no later than February 15.

4. The daily bag and possession limits may be no more than 5 and 10 Canada geese, respectively.

5. The area(s) open to hunting will be described in State regulations.

6. For seasons that include hunting days after September 15:

A. All seasons will be conducted under a specific Memorandum of Agreement (Agreement). Provisions for discontinuing, extending, or modifying the seasons will be included in the Agreement.

B. All seasons initially will be considered experimental. The evaluation required of the State will be incorporated into the Agreement and will include at least the following:

(a) Conduct neck-collar observations (where appropriate) and population surveys beginning at least 2 years prior to the requested season and continuing during the experiment.

(b) Determine derivation of neck-collar codes and/or leg-band recoveries from observations and harvested geese.

(c) Collect morphological information from harvested geese, where appropriate, to ascertain probable source population(s) of the harvest.

(d) Analyze relevant band-recovery data.

(e) Estimate hunter activity and harvest.

(f) Prepare annual and final reports of the experiment.

C. If the results of the evaluation warrant continuation of the season beyond the experimental period, the State will continue to estimate hunter activity and harvest for all areas, including those areas where seasons do not extend beyond September 15, and report these to the Service annually until the State begins participating in the Harvest Information Program.

7. All special seasons will be subject to periodic re-evaluation when circumstances or special situations warrant.

9. Sandhill Cranes

Council Recommendations: The Pacific Flyway Council recommended following the management plan with respect to seasons on the Rocky Mountain Population of greater sandhill cranes. Based on results of the March 1995 survey which indicated a 1995 population index of 20,452, harvest guidelines would allow an open season in the States of Arizona, Colorado, Idaho, Montana, New Mexico, Utah, and Wyoming.

11. Moorhens & Gallinules

Written Comments: The Humane Society believes the bag limits for moorhens are extremely high.

Service Response: The Service is not aware of any information indicating that the current bag limits have had any adverse impact on moorhen populations. Since these bag limits have been the same for a number of years, the Service believes they are appropriate.

12. Rails

Written Comments: The Humane Society believes that bag limits for rails are extremely high and that they are not consistent with wise and ethical use of the resource.

Service Response: Available information indicates that harvest pressure on rails is relatively light and there is no evidence to suggest that the frameworks provided herein are not appropriate.

13. Snipe

Written Comments: The Humane Society believes the bag limits for common snipe are extremely high.

Service Response: The Service believes that frameworks provided herein are appropriate, considering the relatively light harvest pressure on snipe.

14. Woodcock

Council Recommendations: The Atlantic Flyway Council recommended that woodcock season frameworks remain unchanged in the Eastern Region for 1995-96 unless adverse weather substantially depresses the breeding populations as measured by the 1995 Singing Ground Survey. The Council believes that population declines are caused by habitat loss and degradation rather than current harvest levels.

Written Comments: The Pennsylvania Game Commission recommended that the Service and Flyway Councils develop a harvest management strategy for woodcock in which specific population objectives are identified that would require further harvest restrictions. They also are anticipating a more comprehensive analysis of the woodcock harvest when the Service's Harvest Information Program becomes fully operational.

The Humane Society recommended a closed season on woodcock in the Eastern and Central Management regions since they remain in decline.

Service Response: The Service remains concerned about the gradual long-term declines in woodcock populations in both the Eastern and Central management regions. While habitat changes appear to be the primary cause of the declines, available data also suggest that woodcock are harvested at a relatively low rate and that hunting mortality comprises a relatively small

proportion of overall mortality. The Service will work with the Atlantic and Mississippi Flyway Councils to review the status of woodcock and cooperatively develop a harvest-management strategy.

15. Band-tailed Pigeon

Written Comments: The Humane Society recommended a closed season on the Coastal Population of band-tailed pigeons since they remain in decline. An individual from Washington also recommended closing the season on band-tails, citing that even a small harvest would jeopardize the breeding population.

Service Response: The Service supports the continuation of seasons on the Coastal Population. The Service has reviewed recent Coastal Population status and harvest information provided by the States. Over the most recent 10-year period, no significant trend was found overall while Oregon showed a significant increase. Counts in both Oregon and Washington showed substantial increases between 1993 and 1994. Information indicates that the Coastal Population probably numbers between 2.4 and 3.1 million birds and that a minimal harvest of 15 to 20 thousand birds is not likely to adversely affect the band-tailed pigeon population. However, the Service remains concerned about the long-term decline of this population and continues to support restrictive harvest regulations. Again this year, all States having band-tailed pigeon hunting seasons must require band-tailed pigeon hunters to obtain mandatory State permits (or participate in the nationwide Migratory Bird Harvest Information Program) to provide a sampling frame for obtaining more precise estimates of band-tailed pigeon harvest. Those States not participating in the Migratory Bird Harvest Information Program will be required to conduct a harvest survey and provide the results to the Service by June 1, 1996.

16. Mourning Doves

Written Comments: The Humane Society recommended that the mourning dove season in the Western Management Unit be closed since the population has remained in decline.

Service Response: The Service recognizes that there has been a long-term decline in the mourning dove population in the Western Management Unit. Restrictive hunting regulations have been in effect since 1987, and over the most recent 10 years, the population has been stable. A combination of factors probably were responsible for the long-term decline, including loss of nesting habitat through reclamation projects, industrial and urban development, changes in agricultural practices that reduced food supplies, and possibly overharvest in some areas. Since the reduced population level is primarily related to a combination of factors, and hunting has not been shown to adversely affect the overall population, the Service will continue to allow States in the Western Management Unit the opportunity to select a mourning dove season.

17. White-winged and White-tipped doves

Written Comments: The Humane Society recommended that the white-winged dove season in Arizona be closed since the population has remained in decline.

Service Response: The Service recognizes that there has been a long-term decline in the white-winged dove population in Arizona. These decreases were thought to be a result of a loss of nesting habitat from reclamation projects, changing agricultural practices (from grain to cotton farming), and overharvest. The Service notes that, in response to this trend, the Arizona Game and Fish Department instituted a series of restrictive hunting regulations that have been in effect since the 1980s. As a result, white-wing dove populations have since remained relatively stable at a reduced level. Since the population is stable and harvest levels already have been restricted, the Service will continue to allow Arizona the opportunity to select a white-winged dove season.

18. Alaska

Council Recommendations: The Pacific Flyway Council recommended changes in bag and possession limits for ducks in Alaska. Specifically, the Council requested the following bag and possession limits for the two Alaska framework sets of restrictive and moderate/liberal, respectively: North Zone 8/24 or 10/30, Gulf Coast Zone 6/18 or 8/24, and Southeast, Pribilof/Aleutian, and Kodiak zones 5/15 or 7/21; and canvasback limits 2/4. Sea duck limits of 15/30 would be separate, with seasons to remain closed on spectacled and Steller's eiders.

Written Comments: The Humane Society of the United States recommends that the opening date for all seasons in Alaska be delayed by 2 weeks so that young birds are able to leave natal marshes before being subjected to hunting pressure.

Service Response: With the exceptions of canvasback, the Service agrees with the Council's recommendation and proposes to increase daily bag limits to 7 ducks in the Southeast, Pribilof/Aleutian, and Kodiak Zones, 8 ducks in the Gulf Coast Zone, and 10 ducks in the North Zone. Increases would be consistent with the moderate and liberal packages proposed under adaptive harvest management this year, and would return Alaska to the basic limits prevailing prior to restrictions initiated in 1988. Duck breeding populations in Alaska-Yukon during 1995 were above the 1955-94 average by 99 percent for mallards, 90 percent for wigeon, 247 percent for green-winged teal, 164 percent for shovelers, and 896 percent for pintails.

Regarding the canvasback bag limit, the Service believes that harvest management of this species in Alaska and in all Flyways should adhere to the harvest strategy that was employed in 1994, which calls for annually assessing several population parameters, including estimated breeding population, habitat conditions, and harvest. Based on current population levels, expected production, and both last year's and this year's projected harvest estimates, the Service believes that a season in all Flyways and Alaska, with a 1-bird daily bag limit, is warranted.

It is important to note that in Alaska, hunting pressure on migratory birds is comparatively light. Many northern species will have migrated from the State before seasons open there in September and there is no evidence to indicate that regulated hunting has adversely impacted local populations.

20. Puerto Rico

Written Comments: Puerto Rico recommended that the daily bag limit for ducks be increased from 3 to 4 birds and that the daily bag limit for snipe be increased from 6 to 8 birds. This recommendation was further modified during the Early-Season Regulations Meetings when the Puerto Rico representative expressed a desire to have Puerto Rico's regulations be consistent with the Atlantic Flyway.

Service Response: The Service agrees with Puerto Rico's request to make duck and snipe daily bag limits consistent with those proposed for the Atlantic Flyway.

NEPA Consideration

NEPA considerations are covered by the programmatic document, ''Final Supplemental Environmental Impact Statement: Issuance of Annual Regulations Permitting the Sport Hunting of Migratory Birds (FSES 88-

14),'' filed with EPA on June 9, 1988. Notice of Availability was published in the **Federal Register** on June 16, 1988 (53 FR 22582). The Service's Record of Decision was published on August 18, 1988 (53 FR 31341). Copies of these documents are available from the Service at the address indicated under the caption **ADDRESSES.**

Endangered Species Act Consideration

In August 1995, the Division of Endangered Species concluded that the proposed action is not likely to jeopardize the continued existence of listed species or result in the destruction or adverse modification of their critical habitats. Hunting regulations are designed, among other things, to remove or alleviate chances of conflict between seasons for migratory game birds and the protection and conservation of endangered and threatened species and their habitats. The Service's biological opinions resulting from its consultation under section 7 are considered public documents and are available for inspection in the Division of Endangered Species and the Office of Migratory Bird Management.

Regulatory Flexibility Act; Executive Order (E.O.) 12866 and the Paperwork Reduction Act

In the **Federal Register** dated March 24, 1995 (60 FR 15642), the Service reported measures it had undertaken to comply with requirements of the Regulatory Flexibility Act and the Executive Order. These included preparing an Analysis of Regulatory Effects and an updated Final Regulatory Impact Analysis (FRIA), and publication of a summary of the latter. Although a FRIA is no longer required, the economic analysis contained in the FRIA was reviewed and the Service determined that it met the requirements of E.O. 12866. In addition, the Service prepared a Small Entity Flexibility Analysis, under the Regulatory Flexibility Act (5 U.S.C. 601 et seq), which further document the significant beneficial economic effect on a substantial number of small entities. This rule was reviewed under E.O. 12866.

These regulations contain no information collections subject to OMB review under the Paperwork Reduction Act of 1980 (44 U.S.C. 3501 *et seq.*). However, the Service does utilize information acquired through other various information collections in the formulation of migratory game bird hunting regulations. These information collection requirements have been approved by OMB and assigned clearance numbers 1018-0005, 1018-0006, 1018-0008, 1018-0009, 1018-0010, 1018-0015, 1018-0019, and 1018-0023.

Authorship

The primary author is Ron W. Kokel, Office of Migratory Bird Management.

Regulations Promulgation

The rulemaking process for migratory bird hunting regulations must, by its nature, operate under severe time constraints. However, the Service is of the view that every attempt should be made to give the public the greatest possible opportunity to comment on the regulations. Thus, when the proposed early-season rulemaking was published on July 21, the Service established what it believed was the longest period possible for public comment. In doing this, the Service recognized that, at the close of the comment period, time would be of the essence. That is, if there were a delay in the effective date of these regulations after this final rulemaking, the Service is of the opinion that the States would have insufficient time to select season dates and limits; to communicate those selections to the Service; and to establish and publicize the necessary regulations and procedures that implement their decisions.

Therefore, the Service, under authority of the Migratory Bird Treaty Act (July 3, 1918), as amended, (16 U.S.C. 703-712), prescribes final frameworks setting forth the species to be hunted, the daily bag and possession limits, the shooting hours, the season lengths, the earliest opening and latest closing season dates, and hunting areas, from which State and Territory conservation agency officials may select hunting season dates and other options. Upon receipt of season and option selections from these officials, the Service will publish in the **Federal Register** a final rulemaking amending 50 CFR part 20 to reflect seasons, limits, and shooting hours for the contiguous United States, Alaska, Hawaii, Puerto Rico, and the Virgin Islands, for the 1995-96 season.

The Service therefore finds that ''good cause'' exists, within the terms of 5 U.S.C. 553(d)(3) of the Administrative Procedure Act, and these frameworks will, therefore, take effect immediately upon publication.

List of Subjects in 50 CFR Part 20

Exports, Hunting, Imports, Reporting and recordkeeping requirements, Transportation, Wildlife.

The rules that eventually will be promulgated for the 1995-96 hunting season are authorized under the Migratory Bird Treaty Act (July 3, 1918), as amended, (16 U.S.C. 703-712); the Fish and Wildlife Improvement Act (November 8, 1978), as amended, (16 U.S.C. 742); and the Fish and Wildlife Act of 1956 (August 8, 1956), as amended, (16 U.S.C. 742 a–j).

Dated: August 14, 1995.

Robert P. Davison,

Acting Assistant Secretary for Fish and Wildlife and Parks.

Final Regulations Frameworks for 1995-96 Early Hunting Seasons on Certain Migratory Game Birds

Pursuant to the Migratory Bird Treaty Act and delegated authorities, the Department of Interior approved the following proposed frameworks which prescribe season lengths, bag limits, shooting hours, and outside dates within which States may select seasons for certain migratory game birds between September 1, 1995, and March 10, 1996.

General

Dates: All outside dates noted below are inclusive.

Shooting and Hawking (taking by falconry) Hours: Unless otherwise specified, from one-half hour before sunrise to sunset daily.

Possession Limits: Unless otherwise specified, possession limits are twice the daily bag limit.

Area, Zone, and Unit Descriptions: Geographic descriptions are contained in a later portion of this document.

Special September Teal Season

Outside Dates: Between September 1 and September 30, an open season on all species of teal may be selected by Alabama, Arkansas, Colorado (Central Flyway portion only), Illinois, Indiana, Kansas, Kentucky, Louisiana, Mississippi, Missouri, New Mexico (Central Flyway portion only), Ohio, Oklahoma, Tennessee, and Texas in areas delineated by State regulations.

Hunting Seasons and Daily Bag Limits: Not to exceed 9 consecutive days, with a daily bag limit of 4 teal.

Shooting Hours: One-half hour before sunrise to sunset, except in Arkansas, Illinois, Indiana, Missouri, and Ohio, where the hours are from sunrise to sunset.

Special September Duck Seasons

Florida: An experimental 5-consecutive-day season may be selected in September. The daily bag limit may not exceed 4 teal and wood ducks in the aggregate.

Kentucky and Tennessee: In lieu of a special September teal season, an

experimental 5-consecutive-day season may be selected in September. The daily bag limit may not exceed 4 teal and wood ducks in the aggregate, of which no more than 2 may be wood ducks.

Iowa: Iowa may hold up to 5 days of its regular duck hunting season in September. All ducks which are legal during the regular duck season may be taken during the September segment of the season. The September season segment may commence no earlier than the Saturday nearest September 20 (September 23, 1995), with daily bag and possession limits being the same as those in effect during the 1995 regular duck season. The remainder of the regular duck season may not begin before October 15.

Scoter, Eider, and Oldsquaw Ducks (Atlantic Flyway)

Outside Dates: Between September 15 and January 20.

Hunting Seasons and Daily Bag Limits: Not to exceed 107 days, with a daily bag limit of 7, singly or in the aggregate of the listed sea-duck species, of which no more than 4 may be scoters.

Daily Bag Limits During the Regular Duck Season: Within the special sea duck areas, during the regular duck season in the Atlantic Flyway, States may choose to allow the above sea duck limits in addition to the limits applying to other ducks during the regular duck season. In all other areas, sea ducks may be taken only during the regular open season for ducks and must be included in the regular duck season daily bag and possession limits.

Areas: In all coastal waters and all waters of rivers and streams seaward from the first upstream bridge in Maine, New Hampshire, Massachusetts, Rhode Island, Connecticut, and New York; in any waters of the Atlantic Ocean and in any tidal waters of any bay which are separated by at least 1 mile of open water from any shore, island, and emergent vegetation in New Jersey, South Carolina, and Georgia; and in any waters of the Atlantic Ocean and in any tidal waters of any bay which are separated by at least 800 yards of open water from any shore, island, and emergent vegetation in Delaware, Maryland, North Carolina and Virginia; and provided that any such areas have been described, delineated, and designated as special sea-duck hunting areas under the hunting regulations adopted by the respective States.

Special Early Canada Goose Seasons

Atlantic Flyway

General Seasons

Canada goose seasons of up to 15 days during September 1-15 may be selected by Delaware, Maryland, Massachusetts, New Jersey, New York, Pennsylvania, Rhode Island, Virginia, West Virginia and portions of Pennsylvania and North Carolina. Areas open to the hunting of Canada geese must be described, delineated, and designated as such in each State's hunting regulations.

Daily Bag Limits: Not to exceed 5 Canada geese.

Experimental Seasons

Experimental Canada goose seasons of up to 30 days may be selected by North Carolina during September 1-30, Statewide, except that the season may not exceed 20 days during September 1-20 in the Northeast Hunt Unit. Areas open to the hunting of Canada geese must be described, delineated, and designated as such in each State's hunting regulations.

Daily Bag Limits: Not to exceed 5 Canada geese.

Mississippi Flyway

General Seasons

Canada goose seasons of up to 15 days during September 1-15, may be selected by Illinois, Indiana, Michigan (except in the Upper Peninsula, where the season may not extend beyond September 10, and in Huron, Saginaw and Tuscola Counties, where no special season may be held), Minnesota, Missouri, Ohio, Tennessee, and Wisconsin. The daily bag limit may not exceed 5 Canada geese. Areas open to the hunting of Canada geese must be described, delineated, and designated as such in each State's hunting regulations.

Experimental Seasons

Experimental Canada goose seasons may be selected by Illinois, Minnesota, and Tennessee. Areas open to the hunting of Canada geese must be described, delineated, and designated as such in each State's hunting regulations.

Outside Dates: September 1-18 in Illinois; September 1-16 in Minnesota; and September 1-30 in Tennessee.

Season Length: Not to exceed 10 days.

Daily Bag Limits: Not to exceed 5 Canada geese.

Pacific Flyway

General Seasons

Wyoming may select a September season on Canada geese subject to the following conditions:

1. Where applicable, the season must be concurrent with the September portion of the sandhill crane season.
2. Hunting will be by State permit.
3. No more than 150 permits, in total, may be issued.
4. Each permittee may take no more than 2 Canada geese per season.

In Oregon, in the Northwest Zone, and Washington, in the Lower Columbia River Zone, may select Canada goose seasons of up to 15 days during September 1-15. Areas open to the hunting of Canada geese must be described, delineated, and designated as such in each State's hunting regulations.

Daily Bag Limits: Not to exceed 3 Canada geese.

Regular Goose Seasons

Regular goose seasons in Wisconsin and the Upper Peninsula of Michigan may open as early as September 23. Season lengths and bag and possession limits will be established during the late-season regulations process.

Sandhill Cranes

Regular Seasons in the Central Flyway:

Outside Dates: Between September 1 and February 28.

Hunting Seasons: Seasons not to exceed 58 consecutive days may be selected in designated portions of the following States: Colorado, Kansas, Montana, North Dakota, South Dakota, and Wyoming. Seasons not to exceed 93 consecutive days may be selected in designated portions of the following States: New Mexico, Oklahoma, and Texas.

Daily Bag Limits: 3 sandhill cranes.

Permits: Each person participating in the regular sandhill crane seasons must have a valid Federal sandhill crane hunting permit in their possession while hunting.

Special Seasons in the Central and Pacific Flyways:

Arizona, Colorado, Idaho, Montana, New Mexico, Utah, and Wyoming may select seasons for hunting sandhill cranes within the range of the Rocky Mountain Population subject to the following conditions:

Outside Dates: Between September 1 and January 31.

Hunting Seasons: The season in any State or zone may not exceed 30 days.

Bag limits: Not to exceed 3 daily and 9 per season.

Permits: Participants must have a valid permit, issued by the appropriate State, in their possession while hunting.

Other provisions: Numbers of permits, open areas, season dates, protection plans for other species, and other provisions of seasons must be consistent

with the management plan and approved by the Central and Pacific Flyway Councils. All hunts except those in Arizona, New Mexico, Utah, and Wyoming will be experimental.

Common Moorhens and Purple Gallinules

Outside Dates: Between September 1 and January 20 in the Atlantic Flyway, and between September 1 and the Sunday nearest January 20 in the Mississippi and Central Flyways. States in the Pacific Flyway have been allowed to select their hunting seasons between the outside dates for the season on ducks; therefore, they are late-season frameworks and no frameworks are provided in this document.

Hunting Seasons and Daily Bag Limits: Seasons may not exceed 70 days in the Atlantic, Mississippi, and Central Flyways. Seasons may be split into two segments. The daily bag limit is 15 common moorhens and purple gallinules, singly or in the aggregate of the two species.

Rails

Outside Dates: States included herein may select seasons between September 1 and January 20 on clapper, king, sora, and Virginia rails.

Hunting Seasons: The season may not exceed 70 days, and may be split into two segments.

Daily Bag Limits:

Clapper and King Rails - In Rhode Island, Connecticut, New Jersey, Delaware, and Maryland, 10, singly or in the aggregate of the two species. In Texas, Louisiana, Mississippi, Alabama, Georgia, Florida, South Carolina, North Carolina, and Virginia, 15, singly or in the aggregate of the two species.

Sora and Virginia Rails - In the Atlantic, Mississippi, and Central Flyways and the Pacific-Flyway portions of Colorado, Montana, New Mexico, and Wyoming, 25 daily and 25 in possession, singly or in the aggregate of the two species. The season is closed in the remainder of the Pacific Flyway.

Common Snipe

Outside Dates: Between September 1 and February 28, except in Maine, Vermont, New Hampshire, Massachusetts, Rhode Island, Connecticut, New York, New Jersey, Delaware, Maryland, and Virginia, where the season must end no later than January 31.

Hunting Seasons and Daily Bag Limits: Seasons may not exceed 107 days and may be split into two segments. The daily bag limit is 8 snipe.

American Woodcock

Outside Dates: States in the Atlantic Flyway may select hunting seasons between October 1 and January 31. States in the Central and Mississippi Flyways may select hunting seasons between September 1 and January 31.

Hunting Seasons and Daily Bag Limits: In the Atlantic Flyway, seasons may not exceed 45 days, with a daily bag limit of 3; in the Central and Mississippi Flyways, seasons may not exceed 65 days, with a daily bag limit of 5. Seasons may be split into two segments.

Zoning: New Jersey may select seasons in each of two zones. The season in each zone may not exceed 35 days.

Band-tailed Pigeons

Pacific Coast States (California, Oregon, Washington, and Nevada)

Outside Dates: Between September 15 and January 1.

Hunting Seasons and Daily Bag Limits: Not more than 9 consecutive days, with bag and possession limits of 2 and 2 band-tailed pigeons, respectively.

Permit Requirement: The appropriate State agency must issue permits, and report on harvest and hunter participation to the Service by June 1 of the following year, or participate in the Migratory Bird Harvest Information Program.

Zoning: California may select hunting seasons not to exceed 9 consecutive days in each of two zones. The season in the North Zone must close by October 7.

Four-Corners States (Arizona, Colorado, New Mexico, and Utah)

Outside Dates: Between September 1 and November 30.

Hunting Seasons and Daily Bag Limits: Not more than 30 consecutive days, with a daily bag limit of 5 band-tailed pigeons.

Permit Requirement: The appropriate State agency must issue permits, and report on harvest and hunter participation to the Service by June 1 of the following year, or participate in the Migratory Bird Harvest Information Program.

Zoning: New Mexico may select hunting seasons not to exceed 20 consecutive days in each of two zones. The season in the South Zone may not open until October 1.

Mourning Doves

Outside Dates: Between September 1 and January 15, except as otherwise provided, States may select hunting seasons and daily bag limits as follows:

Eastern Management Unit (All States east of the Mississippi River, and Louisiana)

Hunting Seasons and Daily Bag Limits: Not more than 70 days with a daily bag limit of 12, or not more than 60 days with a daily bag limit of 15.

Zoning and Split Seasons: States may select hunting seasons in each of two zones. The season within each zone may be split into not more than three periods. The hunting seasons in the South Zones of Alabama, Florida, Georgia, Louisiana, and Mississippi may commence no earlier than September 20. Regulations for bag and possession limits, season length, and shooting hours must be uniform within specific hunting zones.

Central Management Unit (Arkansas, Colorado, Iowa, Kansas, Minnesota, Missouri, Montana, Nebraska, New Mexico, North Dakota, Oklahoma, South Dakota, Texas, and Wyoming)

Hunting Seasons and Daily Bag Limits: Not more than 70 days with a daily bag limit of 12, or not more than 60 days with a daily bag limit of 15.

Zoning and Split Seasons: States may select hunting seasons in each of two zones. The season within each zone may be split into not more than three periods. Texas may select hunting seasons for each of three zones subject to the following conditions:

A. The hunting season may be split into not more than two periods, except in that portion of Texas in which the special white-winged dove season is allowed, where a limited mourning dove season may be held concurrently with that special season (see white-winged dove frameworks).

B. A season may be selected for the North and Central Zones between September 1 and January 25; and for the South Zone between September 20 and January 25.

C. Each zone may have a daily bag limit of 12 doves (15 under the alternative) in the aggregate, no more than 6 of which may be white-winged doves and no more than 2 of which may be white-tipped doves, except that during the special white-winged dove season, the daily bag limit may not exceed 10 white-winged, mourning, and white-tipped doves in the aggregate, of which no more than 5 may be mourning doves and 2 may be white-tipped doves.

D. Except as noted above, regulations for bag and possession limits, season length, and shooting hours must be uniform within each hunting zone.

Western Management Unit (Arizona, California, Idaho, Nevada, Oregon, Utah, and Washington)

Hunting Seasons and Daily Bag Limits: Idaho, Nevada, Oregon, Utah, and Washington - Not more than 30 consecutive days with a daily bag limit of 10 mourning doves (in Nevada, the daily bag limit may not exceed 10 mourning and white-winged doves in the aggregate).

Arizona and California - Not more than 60 days which may be split between two periods, September 1-15 and November 1-January 15. In Arizona, during the first segment of the season, the daily bag limit is 10 mourning and white-winged doves in the aggregate, of which no more than 6 may be white-winged doves. During the remainder of the season, the daily bag limit is restricted to 10 mourning doves. In California, the daily bag limit may not exceed 10 mourning and white-winged doves in the aggregate.

White-winged and White-tipped Doves

Hunting Seasons and Daily Bag Limits:

Except as shown below, seasons in Arizona, California, Florida, Nevada, New Mexico, and Texas must be concurrent with mourning dove seasons.

Arizona may select a hunting season of not more than 30 consecutive days, running concurrently with the first segment of the mourning dove season. The daily bag limit may not exceed 10 mourning and white-winged doves in the aggregate, of which no more than 6 may be white-winged doves.

In Florida, the daily bag limit may not exceed 12 mourning and white-winged doves (15 under the alternative) in the aggregate, of which no more than 4 may be white-winged doves.

In the Nevada Counties of Clark and Nye, and in the California Counties of Imperial, Riverside, and San Bernardino, the daily bag limit may not exceed 10 mourning and white-winged doves in the aggregate.

In New Mexico, the daily bag limit may not exceed 12 mourning and white-winged doves (15 under the alternative) in the aggregate.

In Texas, the daily bag limit may not exceed 12 mourning, white-winged, and white-tipped doves (15 under the alternative) in the aggregate, of which not more than 6 may be white-winged doves and not more than 2 may be white-tipped doves.

In addition, Texas may also select a hunting season of not more than 4 days for the special white-winged dove area of the South Zone between September 1 and September 19. The daily bag limit may not exceed 10 white-winged,mourning, and white-tipped doves in the aggregate, of which no more than 5 may be mourning doves and 2 may be white-tipped doves.

Alaska

Outside Dates: Between September 1 and January 26.

Hunting Seasons: Alaska may select 107 consecutive days for waterfowl, sandhill cranes, and common snipe in each of five zones. The season may be split without penalty in the Kodiak Zone. The seasons in each zone must be concurrent.

Closures: The season is closed on Canada geese from Unimak Pass westward in the Aleutian Island chain. The hunting season is closed on Aleutian Canada geese, emperor geese, spectacled eiders, and Steller's eiders.

Daily Bag and Possession limits:

Ducks - Except as noted, a basic daily bag limit of 7 and a possession limit of 21 ducks. Daily bag and possession limits in the North Zone are 10 and 30, and in the Gulf Coast Zone they are 8 and 24, respectively. The basic limits may include no more than 1 canvasback daily and 3 in possession.

In addition to the basic limit, there is a daily bag limit of 15 and a possession limit of 30 scoter, common and king eiders, oldsquaw, harlequin, and common and red-breasted mergansers, singly or in the aggregate of these species.

Geese - A basic daily bag limit of 6, of which not more than 4 may be greater white-fronted or Canada geese, singly or in the aggregate of these species, except that the daily bag limit on Canada geese in Game Management Units 9E and 18 is 1.

Brant - A daily bag limit of 2.

Common snipe - A daily bag limit of 8.

Sandhill cranes - A daily bag limit of 3.

Tundra swans - Open seasons for tundra swans may be selected subject to the following conditions:

1. No more than 300 permits may be issued in GMU 22, authorizing each permittee to take 1 tundra swan per season.
2. No more than 500 permits may be issued during the experimental season in GMU 18. No more than 1 tundra swan may be taken per permit.
3. The seasons must be concurrent with other migratory bird seasons.
4. The appropriate State agency must issue permits, obtain harvest and hunter-participation data, and report the results of this hunt to the Service by June 1 of the following year.

Hawaii

Outside Dates: Between September 1 and January 15.

Hunting Seasons: Not more than 60 days (70 under the alternative) for mourning doves.

Bag Limits: Not to exceed 15 (12 under the alternative) mourning doves.

Note: Mourning doves may be taken in Hawaii in accordance with shooting hours and other regulations set by the State of Hawaii, and subject to the applicable provisions of 50 CFR part 20.

Puerto Rico

Doves and Pigeons:

Outside Dates: Between September 1 and January 15.

Hunting Seasons: Not more than 60 days.

Daily Bag and Possession Limits: Not to exceed 10 Zenaida, mourning, and white-winged doves in the aggregate. Not to exceed 5 scaly-naped pigeons.

Closed Areas: There is no open season on doves or pigeons in the following areas: Municipality of Culebra, Desecheo Island, Mona Island, El Verde Closure Area, and Cidra Municipality and adjacent areas.

Ducks, Coots, Moorhens, Gallinules, and Snipe:

Outside Dates: Between October 1 and January 31.

Hunting Seasons: Not more than 55 days may be selected for hunting ducks, common moorhens, and common snipe. The season may be split into two segments.

Daily Bag Limits:

Ducks - Same as those proposed for the Atlantic Flyway.

Common moorhens - Not to exceed 6.

Common snipe - Not to exceed 8.

Closed Seasons: The season is closed on the ruddy duck, white-cheeked pintail, West Indian whistling duck, fulvous whistling duck, and masked duck, which are protected by the Commonwealth of Puerto Rico. The season also is closed on the purple gallinule, American coot, and Caribbean coot.

Closed Areas: There is no open season on ducks, common moorhens, and common snipe in the Municipality of Culebra and on Desecheo Island.

Virgin Islands

Doves and Pigeons:

Outside Dates: Between September 1 and January 15.

Hunting Seasons: Not more than 60 days for Zenaida doves.

Daily Bag and Possession Limits: Not to exceed 10 Zenaida doves.

Closed Seasons: No open season is prescribed for ground or quail doves, or pigeons in the Virgin Islands.

Closed Areas: There is no open season for migratory game birds on Ruth Cay (just south of St. Croix).

Local Names for Certain Birds: Zenaida dove, also known as mountain dove; bridled quail-dove, also known as Barbary dove or partridge; Common ground-dove, also known as stone dove, tobacco dove, rola, or tortolita; scaly-naped pigeon, also known as red-necked or scaled pigeon.

Ducks

Outside Dates: Between December 1 and January 31.

Hunting Seasons: Not more than 55 consecutive days.

Daily Bag Limits: Same as the limit proposed for the Atlantic Flyway.

Closed Seasons: The season is closed on the ruddy duck, white-cheeked pintail, West Indian whistling duck, fulvous whistling duck, and masked duck.

Special Falconry Regulations

Falconry is a permitted means of taking migratory game birds in any State meeting Federal falconry standards in 50 CFR 21.29(k). These States may select an extended season for taking migratory game birds in accordance with the following:

Extended Seasons: For all hunting methods combined, the combined length of the extended season, regular season, and any special or experimental seasons shall not exceed 107 days for any species or group of species in a geographical area. Each extended season may be divided into a maximum of 3 segments.

Framework Dates: Seasons must fall between September 1 and March 10.

Daily Bag and Possession Limits: Falconry daily bag and possession limits for all permitted migratory game birds shall not exceed 3 and 6 birds, respectively, singly or in the aggregate, during extended falconry seasons, any special or experimental seasons, and regular hunting seasons in all States, including those that do not select an extended falconry season.

Regular Seasons: General hunting regulations, including seasons and hunting hours, apply to falconry in each State listed in 50 CFR 21.29(k). Regular-season bag and possession limits do not apply to falconry. The falconry bag limit is not in addition to gun limits.

Area, Unit, and Zone Descriptions

Central Flyway portion of the following States consists of:

Colorado: That area lying east of the Continental Divide.

Montana: That area lying east of Hill, Chouteau, Cascade, Meagher, and Park Counties.

New Mexico: That area lying east of the Continental Divide but outside the Jicarilla Apache Indian Reservation.

Wyoming: That area lying east of the Continental Divide and excluding the Great Divide Portion.

The remaining portions of these States are in the Pacific Flyway.

Mourning and White-winged Doves

Alabama

South Zone - Baldwin, Barbour, Coffee, Covington, Dale, Escambia, Geneva, Henry, Houston, and Mobile Counties.

North Zone - Remainder of the State.

California

White-winged Dove Open Areas - Imperial, Riverside, and San Bernardino Counties.

Florida

Northwest Zone - The Counties of Bay, Calhoun, Escambia, Franklin, Gadsden, Gulf, Holmes, Jackson, Liberty, Okaloosa, Santa Rosa, Walton, Washington, Leon (except that portion north of U.S. 27 and east of State Road 155), Jefferson (south of U.S. 27, west of State Road 59 and north of U.S. 98), and Wakulla (except that portion south of U.S. 98 and east of the St. Marks River).

South Zone - Remainder of State.

Georgia

Northern Zone - That portion of the State lying north of a line running west to east along U.S. Highway 280 from Columbus to Wilcox County, thence southward along the western border of Wilcox County; thence east along the southern border of Wilcox County to the Ocmulgee River, thence north along the Ocmulgee River to Highway 280, thence east along Highway 280 to the Little Ocmulgee River; thence southward along the Little Ocmulgee River to the Ocmulgee River; thence southwesterly along the Ocmulgee River to the western border of the Jeff Davis County; thence south along the western border of Jeff Davis County; thence east along the southern border of Jeff Davis and Appling Counties; thence north along the eastern border of Appling County, to the Altamaha River; thence east to the eastern border of Tattnall County; thence north along the eastern border of Tattnall County; thence north along the western border of Evans to Candler County; thence west along the southern border of Candler County to the Ohoopee River; thence north along the western border of Candler County to Bulloch County; thence north along the western border of Bulloch County to U.S. Highway 301; thence northeast along U.S. Highway 301 to the South Carolina line.

South Zone - Remainder of the State.

Louisiana

North Zone - That portion of the State north of Interstate Highway 10 from the Texas State line to Baton Rouge, Interstate Highway 12 from Baton Rouge to Slidell and Interstate Highway 10 from Slidell to the Mississippi State line.

South Zone - The remainder of the State.

Mississippi

South Zone - The Counties of Forrest, George, Greene, Hancock, Harrison, Jackson, Lamar, Marion, Pearl River, Perry, Pike, Stone, and Walthall.

North Zone - The remainder of the State.

Nevada

White-winged Dove Open Areas - Clark and Nye Counties.

Texas

North Zone - That portion of the State north of a line beginning at the International Bridge south of Fort Hancock; north along FM 1088 to TX 20; west along TX 20 to TX 148; north along TX 148 to I-10 at Fort Hancock; east along I-10 to I-20; northeast along I-20 to I-30 at Fort Worth; northeast along I-30 to the Texas-Arkansas State line.

South Zone - That portion of the State south and west of a line beginning at the International Bridge south of Del Rio, proceeding east on U.S. 90 to San Antonio; then east on I-10 to Orange, Texas.

Special White-winged Dove Area in the South Zone - That portion of the State south and west of a line beginning at the International Bridge south of Del Rio, proceeding east on U.S. 90 to Uvalde; south on U.S. 83 to TX 44; east along TX 44 to TX 16 at Freer; south along TX 16 to TX 285 at Hebbronville; east along TX 285 to FM 1017; southwest along FM 1017 to TX 186 at Linn; east along TX 186 to the Mansfield Channel at Port Mansfield; east along the Mansfield Channel to the Gulf of Mexico.

Area with additional restrictions - Cameron, Hidalgo, Starr, and Willacy Counties.

Central Zone - That portion of the State lying between the North and South Zones.

Band-tailed Pigeons

California

North Zone - Alpine, Butte, Del Norte, Glenn, Humboldt, Lassen, Mendocino, Modoc, Plumas, Shasta, Sierra, Siskiyou, Tehama, and Trinity Counties.

South Zone - The remainder of the State.

New Mexico

North Zone - North of a line following U.S. 60 from the Arizona State line east to I-25 at Socorro and then south along I-25 from Socorro to the Texas State line.

South Zone - Remainder of the State.

Washington

Western Washington - The State of Washington excluding those portions lying east of the Pacific Crest Trail and east of the Big White Salmon River in Klickitat County.

Woodcock

New Jersey

North Zone - That portion of the State north of NJ 70.

South Zone - The remainder of the State.

Special September Goose Seasons

Atlantic Flyway

North Carolina

Northeast Hunt Unit - Counties of Bertie, Camden, Chovan, Currituck, Dare, Hyde, Pasquotank, Perquimans, Tyrrell, and Washington.

Mississippi Flyway

Illinois

Northeast Zone - Cook, DuPage, Grundy, Kane, Kankakee, Kendall, Lake, McHenry, and Will Counties.

Minnesota

Twin Cities Metro Zone - All of Hennepin and Ramsey Counties.

In Anoka County; the municipalities of Andover, Anoka, Blaine, Centerville, Circle Pines, Columbia Heights, Coon Rapids, Fridley, Hilltop, Lexington, Lino Lakes, Ramsey, and Spring Lake Park; that portion of Columbus Township lying south of County State Aid Highway (CSAH) 18; and all of the municipality of Ham Lake except that portion described as follows:

Beginning at the intersection of CSAH 18 and U.S. Highway 65, then east along CSAH 18 to the eastern boundary of Ham Lake, north along the eastern boundary of Ham Lake to the north boundary of Ham Lake, west along the north boundary of Ham Lake to U.S. 65, and south along U.S. 65 to the point of beginning.

In Carver County; the municipalities of Carver, Chanhassen, Chaska, and Victoria; the Townships of Chaska and Laketown; and those portions of the municipalities of Cologne, Mayer, Waconia, and Watertown and the Townships of Benton, Dahlgren, Waconia, and Watertown lying north and east of the following described line:

Beginning on U.S. 212 at the southwest corner of the municipality of Chaska, then west along U.S. 212 to State Trunk Highway (STH) 284, north along STH 284 to CSAH 10, north and west along CSAH 10 to CSAH 30, north and west along CSAH 30 to STH 25, west and north along STH 25 to CSAH 10, north along CSAH 10 to the Carver County line, and east along the Carver County line to the Hennepin County line.

In Dakota County; the municipalities of Apple Valley, Burnsville, Eagan, Farmington, Hastings, Inver Grove Heights, Lakeville, Lilydale, Mendota, Mendota Heights, Rosemont, South St. Paul, Sunfish Lake, and West St. Paul; and the Township of Nininger.

In Scott County; the municipalities of Jordan, Prior Lake, Savage and Shakopee; and the Townships of Credit River, Jackson, Louisville, St. Lawrence, Sand Creek, and Spring Lake.

In Washington County; the municipalities of Afton, Bayport, Birchwood, Cottage Grove, Dellwood, Forest Lake, Hastings, Hugo, Lake Elmo, Lakeland, Lakeland Shores, Landfall, Mahtomedi, Marine, Newport, Oakdale, Oak Park Heights, Pine Springs, St. Croix Beach, St. Mary's Point, St. Paul Park, Stillwater, White Bear Lake, Willernie, and Woodbury; the Townships of Baytown, Denmark, Grant, Gray Cloud Island, May, Stillwater, and West Lakeland; that portion of Forest Lake Township lying south of STH 97 and CSAH 2; and those portions of New Scandia Township lying south of STH 97 and a line due east from the intersection of STH 97 and STH 95 to the eastern border of the State.

Fergus Falls/Benson Zone - That area encompassed by a line beginning on State Trunk Highway (STH) 55 at the Minnesota border, then south along the Minnesota border to a point due south of the intersection of STH 7 and County State Aid Highway (CSAH) 7 in Big Stone County, north to the STH 7/CSAH 7 intersection and continuing north along CSAH 7 to CSAH 6 in Big Stone County, east along CSAH 6 to CSAH 21 in Big Stone County, south along CSAH 21 to CSAH 10 in Big Stone County, east along CSAH 10 to CSAH 22 in Swift County, east along CSAH 22 to CSAH 5 in Swift County, south along CSAH 5 to U.S. Highway 12, east along U.S. 12 to CSAH 17 in Swift County, south along CSAH 17 to the Swift County border, east along the south border of Swift County and north along the east border of Swift County to the south border of Pope County, east along the south border of Pope County and north along the east border of Pope County to STH 28, west along STH 28 to CSAH 33 in Pope County, north along CSAH 33 to CSAH 3 in Douglas County, north along CSAH 3 to CSAH 69 in Otter Tail County, north along CSAH 69 to CSAH 46 in Otter Tail County, east along CSAH 46 to the east border of Otter Tail County, north along the east border of Otter Tail County to CSAH 40 in Otter Tail County, west along CSAH 40 to CSAH 75 in Otter Tail County, north along CSAH 75 to STH 210, west along STH 210 to STH 108, north along STH 108 to CSAH 1 in Otter Tail County, west along CSAH 1 to CSAH 14 in Otter Tail County, north along CSAH 14 to CSAH 44 in Otter Tail County, west along CSAH 44 to CSAH 35 in Otter Tail County, north along CSAH 35 to STH 108, west along STH 108 to CSAH 19 in Wilkin County, south along CSAH 19 to STH 55, then west along STH 55 to the point of beginning.

Southwest Canada Goose Zone - All of Blue Earth, Cottonwood, Faribault, Jackson, LeSueur, Lincoln, Lyon, Martin, McLeod, Murray, Nicollet, Nobles, Sibley, Waseca, and Watonwan Counties; that portion of Brown County lying south and west of the following described line: beginning at the junction of U.S. Highway 14, and the east of Brown County line; thence west on U.S. Highway 14 to Cobden; thence due west one mile on U.S. Highway 14 and the township road to the Brown County line; thence due west 12 miles along the county line to the west Brown County line; that portion of Renville County east of State Trunk Highway 4 (STH); that portion of Meeker County south of U.S. Highway 12; in Scott County, the Townships of Belle Plaine, Blakeley, and Helena, including the municipalities located therein; and that portion of Carver County lying west, of the following described line: beginning at the northeast corner of San Francisco Township, thence west along the San Francisco Township line to the east boundary of Dahlgren Township, thence north on the Dahlgren Township line to U.S. Highway 212, thence west on U.S. Highway 212 to STH 284, thence north on STH 284 to County State Aid Highway (CSAH) 10, thence north and west on CSAH 10 to CSAH 30, thence north and west on CSAH 30 the STH 25, thence east and north on STH 25 to CSAH 10, thence north on CSAH 10 to the Carver County line.

Tennessee

Middle Tennessee Zone - Those portions of Houston, Humphreys, Montgomery, Perry, and Wayne Counties east of State Highway 13; and Bedford, Cannon, Cheatham, Coffee, Davidson, Dickson, Franklin, Giles, Hickman, Lawrence, Lewis, Lincoln, Macon, Marshall, Maury, Moore, Robertson, Rutherford, Smith, Sumner,

Trousdale, Williamson, and Wilson Counties.

Cumberland Plateau Zone - Bledsoe, Bradley, Clay, Cumberland, Dekalb, Fentress, Grundy, Hamilton, Jackson, Marion, McMinn, Meigs, Morgan, Overton, Pickett, Polk, Putnam, Rhea, Roane, Scott, Sequatchie, Van Buren, Warren, and White Counties.

East Tennessee Zone - Anderson, Blount, Campbell, Carter, Claiborne, Cocke, Grainger, Greene, Hamblen, Hancock, Hawkins, Jefferson, Johnson, Knox, Loudon, Monroe, Sevier, Sullivan, Unicoi, Union, and Washington Counties.

Wisconsin

Early-Season Subzone - That portion of the State encompassed by a line beginning at the Lake Michigan shore in Sheboygan, then west along State Highway 23 to State 67, southerly along State 67 to County Highway E in Sheboygan County, southerly along County E to State 28, south and west along State 28 to U.S. Highway U in Washington County, southerly along County U to County N, southeasterly along County N to State 60, westerly along State 60 to County Highway P in Dodge County, southerly along County P to County O, westerly along County O to State 109, south and west along State 109 to State 26, southerly along State 26 to U.S. 12, southerly along U.S. 12 to State 89, southerly along Sate 89 to U.S. 14, then southerly along U.S. 14 to the Illinois border.

Pacific Flyway

Oregon

Northwest Oregon Early-Season Canada Goose Zone—All of Benton, Clackamas, Clatsop, Columbia, Lane, Lincoln, Linn, Marion, Polk, Multnomah, Tillamook, Washington, and Yamhill Counties.

Washington

Lower Columbia River Zone—Beginning at the Washington-Oregon border on the I–5 Bridge near Vancouver, Washington; north on I–5 to Kelso; west on Highway 4 from Kelso to Highway 401; south and west on Highway 401 to Highway 101 at the Astoria-Megler Bridge; west on Highway 101 to Gray Drive in the City of Ilwaco; west on Gray Drive to Canby Road; southwest on Canby Road to the North Jetty; southwest on the North Jetty to its end; southeast to the Washington-Oregon border; upstream along the Washington-Oregon border to the point of origin.

Wyoming

Bear River Area - That portion of Lincoln County described in State regulations.

Salt River Area - That portion of Lincoln County described in State regulations.

Eden-Farson Area - Those portions of Sweetwater and Sublette Counties described in State regulations.

Sandhill Cranes

Central Flyway

Colorado

Regular-Season Open Area - The Central Flyway portion of the State except the San Luis Valley (Alamosa, Conejos, Costilla, Hinsdale, Mineral, Rio Grande and Saguache Counties east of the Continental Divide) and North Park (Jackson County).

Kansas

Regular Season Open Area - That portion of the State west of a line beginning at the Oklahoma border, north on I-35 to Wichita, north on I-135 to Salina, and north on U.S. 81 to the Nebraska border.

New Mexico

Regular-Season Open Area - Chaves, Curry, De Baca, Eddy, Lea, Quay, and Roosevelt Counties.

Middle Rio Grande Valley Area - The Central Flyway portion of New Mexico in Socorro and Valencia Counties.

Southwest Zone - Sierra, Luna, and Dona Ana Counties.

Oklahoma

Regular-Season Open Area - That portion of the State west of I-35.

Texas

Regular-Season Open Area - That portion of the State west of a line from the International Toll Bridge at Brownsville along U.S. 77 to Victoria; U.S. 87 to Placedo; Farm Road 616 to Blessing; State 35 to Alvin; State 6 to U.S. 290; U.S. 290 to Austin; I-35 to the Texas-Oklahoma border.

North Dakota

Regular-Season Open Area - That portion of the State west of U.S. 281.

South Dakota

Regular-Season Open Area - That portion of the State west of U.S. 281.

Montana

Regular-Season Open Area - The Central Flyway portion of the State except that area south of I-90 and west of the Bighorn River.

Wyoming

Regular-Season Open Area - Campbell, Converse, Crook, Goshen, Laramie, Niobrara, Platte, and Weston Counties.

Riverton-Boysen Unit - Portions of Fremont County.

Pacific Flyway

Arizona

Special-Season Area - Game Management Units 30A, 30B, 31, and 32.

Montana

Special-Season Area - See State regulations.

Utah

Special-Season Area - Rich County.

Wyoming

Bear River Area - That portion of Lincoln County described in State regulations.

Salt River Area - That portion of Lincoln County described in State regulations.

Eden-Farson Area - Those portions of Sweetwater and Sublette Counties described in State regulations.

All Migratory Game Birds in Alaska

North Zone - State Game Management Units 11-13 and 17-26.

Gulf Coast Zone - State Game Management Units 5-7, 9, 14-16, and 10 - Unimak Island only.

Southeast Zone - State Game Management Units 1-4.

Pribilof and Aleutian Islands Zone - State Game Management Unit 10 - except Unimak Island.

Kodiak Zone - State Game Management Unit 8.

All Migratory Birds in the Virgin Islands

Ruth Cay Closure Area - The island of Ruth Cay, just south of St. Croix.

All Migratory Birds in Puerto Rico

Municipality of Culebra Closure Area - All of the municipality of Culebra.

Desecheo Island Closure Area - All of Desecheo Island.

Mona Island Closure Area - All of Mona Island.

El Verde Closure Area - Those areas of the municipalities of Rio Grande and Loiza delineated as follows: (1) All lands between Routes 956 on the west and 186 on the east, from Route 3 on the north to the juncture of Routes 956 and 186 (Km 13.2) in the south; (2) all lands between Routes 186 and 966 from the juncture of 186 and 966 on the north, to the Caribbean National Forest Boundary on the south; (3) all lands lying west of Route 186 for one kilometer from the juncture of Routes 186 and 956 south to Km 6 on Route 186; (4) all lands within Km 14 and Km 6 on the west and the Caribbean National Forest Boundary on the east; and (5) all lands within the Caribbean National Forest Boundary whether private or public.

Cidra Municipality and adjacent areas - All of Cidra Municipality and portions of Aguas, Buenas, Caguas, Cayer, and Comerio Municipalities as encompassed within the following boundary: beginning on Highway 172 as it leaves the municipality of Cidra on the west edge, north to Highway 156, east on Highway 156 to Highway 1, south on

Highway 1 to Highway 765, south on Highway 765 to Highway 763, south on Highway 763 to the Rio Guavate, west along Rio Guavate to Highway 1, southwest on Highway 1 to Highway 14, west on Highway 14 to Highway 729, north on Highway 729 to Cidra Municipality boundary to the point of beginning.

[FR Doc. 95–21315 Filed 8–28–95; 8:45 am]

BILLING CODE 4310–55–F

federal register

Tuesday
August 29, 1995

Part VII

Federal Emergency Management Agency

Changes to the Hotel and Motel Fire Safety Act National Master List; Notice

FEDERAL EMERGENCY MANAGEMENT AGENCY

Changes to the Hotel and Motel Fire Safety Act National Master List

AGENCY: United States Fire Administration, FEMA.

ACTION: Notice.

SUMMARY: The Federal Emergency Management Agency (FEMA or Agency) gives notice of additions and corrections/changes to, and deletions from, the national master list of places of public accommodations which meet the fire prevention and control guidelines under the Hotel and Motel Fire Safety Act.

EFFECTIVE DATE: September 28, 1995.

ADDRESSES: Comments on the master list are invited and may be addressed to the Rules Docket Clerk, Federal Emergency Management Agency, 500 C Street, SW., room 840, Washington, DC 20472, (fax) (202) 646–4536. To be added to the National Master List, or to make any other change to the list, see Supplemental Information below.

FOR FURTHER INFORMATION CONTACT: John Ottoson, Fire Management Programs Branch, United States Fire Administration, Federal Emergency Management Agency, National Emergency Training Center, 16825 South Seton Avenue, Emmitsburg, MD 21727, (301) 447–1272.

SUPPLEMENTARY INFORMATION: Acting under the Hotel and Motel Fire Safety Act of 1990, 15 U.S.C. 2201 note, the United States Fire Administration has worked with each State to compile a national master list of all of the places of public accommodation affecting commerce located in each State that meet the requirements of the guidelines under the Act. FEMA published the national master list in the **Federal Register** on Friday, December 2, 1994, 60 FR 61932, and published changes approximately monthly since then.

Parties wishing to be added to the National Master List, or to make any other change, should contact the State office or official responsible for compiling listings of properties which comply with the Hotel and Motel Fire Safety Act. A list of State contacts was published in 59 FR 50132 on September 30, 1994. If the published list is unavailable to you, the State Fire Marshal's office can direct you to the appropriate office. Periodically FEMA will update and redistribute the national master list to incorporate additions and corrections/changes to the list, and deletions from the list, that are received from the State offices.

Each update contains or may contain three categories: ''Additions;'' ''Corrections/changes;'' and ''Deletions.'' For the purposes of the updates, the three categories mean and include the following:

''Additions'' are either names of properties submitted by a State but inadvertently omitted from the initial master list or names of properties submitted by a State after publication of the initial master list;

''Corrections/changes'' are corrections to property names, addresses or telephone numbers previously published or changes to previously published information directed by the State, such as changes of address or telephone numbers, or spelling corrections; and

''Deletions'' are entries previously submitted by a State and published in the national master list or an update to the national master list, but subsequently removed from the list at the direction of the State.

Copies of the national master list and its updates may be obtained by writing to the Government Printing Office, Superintendent of Documents, Washington, DC 20402–9325. When requesting copies please refer to stock number 069–001–00049–1.

The update to the national master list follows below.

Dated: August 23, 1995.

John P. Carey,

General Counsel.

BILLING CODE 6718–26–M

HOTEL AND MOTEL FIRE SAFETY ACT NATIONAL MASTER LIST 08/18/95 UPDATE

Index/Property name	PO box/rt no. and street address	City	State/ZIP	Telephone
ADDITIONS				
AK				
AK0047 JUNEAU SUPER 8 MOTEL	2295 TROUT ST	JUNEAU	AK 99801	(907) 789–4858
KY				
KY0422 FAIRFIELD INN	10945 RT. 60	ASHLAND	KY 41102	(606) 928–1222
KY0421 MOHWAK HOTEL	HWY 70	BROWNSVILLE	KY 42210	(502) 597–2282
KY0426 HWY 80 MOTEL	HWY 80	HINDMAN	KY 41822	( ) –
KY0425 BOONE TRAIL MOTEL	HWY 25 E. N	MIDDLESBORO	KY 40965	( ) –
KY0424 COACHMAN MOTEL	1430 CUMBERLAND AVE.	MIDDLESBORO	KY 40965	( ) –
KY0423 DOWNTOWN MOTOR LODGE	1623 CUMBERLAND AVE.	MIDDLESBORO	KY 40965	( ) –
NY				
NY0624 MICROTEL	7 RENSSELAER AVENUE.	LATHAM	NY 12110	(518) 782–9161
NY0623 CROWNE PLAZA—MANHATTAN	1605 BROADWAY	NEW YORK	NY 10019	(212) 977–4000
WI				
WI0234 DAYS INN	W4545 LINMAR LN	JOHNSON CREEK	WI 53038	(414) 699–8000
WI0235 DAYS INN	4402 E. BROADWAY SERVICE RD.	MADISON	WI 53701	(608) 233–1800
WI0233 SUPER 8 MOTEL	100 FOUNDRY DRIVE	RICHLAND CENTER	WI 53581	(608) 647–8988
CORRECTIONS/CHANGES				
KY				
KY0316 HOLIDAY INN	606 S. HWY 27	SOMERSET	KY 42501	(606) 678–8115
WI				
WI0229 MOTEL 6	1614 SHAWANO	GREEN BAY	WI 54303	(414) 494–6730

HOTEL AND MOTEL FIRE SAFETY ACT NATIONAL MASTER LIST 08/18/95 UPDATE—Continued

Index/Property name	PO box/rt no. and street address	City	State/ZIP	Telephone
DELETIONS				
NONE				

[FR Doc. 95–21395 Filed 8–28–95; 8:45 am]

BILLING CODE 6718–26–P

federal register

Tuesday
August 29, 1995

Part VIII

The President

Memorandum of August 25, 1995—Delegation of Authority To Issue Guidelines and Instructions to Federal Agencies on Consulting With State, Local, and Tribal Governments

Federal Register
Vol. 60, No. 167
Tuesday, August 29, 1995

Presidential Documents

Title 3—

The President

Memorandum of August 25, 1995

Delegation of Authority To Issue Guidelines and Instructions to Federal Agencies on Consulting With State, Local, and Tribal Governments

Memorandum for the Director of the Office of Management and Budget

By the authority vested in me as President by the Constitution and laws of the United States, including section 204(c) of the Unfunded Mandates Reform Act of 1995 (Public Law 104–4) and section 301 of title 3 of the United States Code, I hereby delegate to the Director of the Office of Management and Budget the authority vested in the President to issue the guidelines and instructions to Federal agencies required by section 204(c) of that Act.

You are authorized and directed to publish this memorandum in the **Federal Register**.

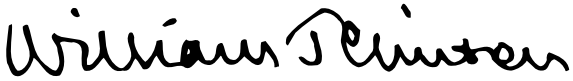

THE WHITE HOUSE,
Washington, August 25, 1995.

[FR Doc. 95–21609
Filed 8–28–95; 10:27 am]
Billing code 3110–01–M

Reader Aids

Federal Register

Vol. 60, No. 167

Tuesday, August 29, 1995

CUSTOMER SERVICE AND INFORMATION

Federal Register/Code of Federal Regulations

General Information, indexes and other finding aids	**202–523–5227**
Public inspection announcement line	**523–5215**

Laws

Public Laws Update (numbers, dates, etc.)	**523–6641**

Presidential Documents

Executive orders and proclamations	**523–5227**

The United States Government Manual

523–5227

Other Services

Electronic and on-line services (voice)	**523–4534**
Privacy Act Compilation	**523–3187**
TDD for the hearing impaired	**523–5229**

ELECTRONIC BULLETIN BOARD

Free **Electronic Bulletin Board** service for Public Law numbers, Federal Register finding aids, and list of documents on public inspection. **202–275–0920**

FAX-ON-DEMAND

You may access our Fax-On-Demand service. You only need a fax machine and there is no charge for the service except for long distance telephone charges the user may incur. The list of documents on public inspection and the daily Federal Register's table of contents are available using this service. The document numbers are 7050-Public Inspection list and 7051-Table of Contents list. The public inspection list will be updated immediately for documents filed on an emergency basis.

NOTE: YOU WILL ONLY GET A LISTING OF DOCUMENTS ON FILE AND NOT THE ACTUAL DOCUMENT. Documents on public inspection may be viewed and copied in our office located at 800 North Capitol Street, N.W., Suite 700. The Fax-On-Demand telephone number is: **301–713–6905**

FEDERAL REGISTER PAGES AND DATES, AUGUST

39101–39240 1
39241–39624 2
39625–39834 3
39835–40052 4
40053–40258 7
40259–40452 8
40453–40736 9
40737–40992 10
40993–41792 11
41793–42024 14
42025–42424 15
42425–42766 16
42767–43000 17
43001–43346 18
43347–43512 21
43513–43704 22
43705–43952 23
43953–44252 24
44253–44414 25
44415–44726 28
44727–45040 29

CFR PARTS AFFECTED DURING AUGUST

At the end of each month, the Office of the Federal Register publishes separately a List of CFR Sections Affected (LSA), which lists parts and sections affected by documents published since the revision date of each title.

3 CFR

Proclamations:
6814 40451
6815 40736
6816 43345
6817 43703

Executive Orders:
July 9, 1910 (Revoked in part by PLO 7153) 42067
12924 (See Notice of August 15).....42767
12967 39623
12968 40245
12969 40989

Administrative Orders:
Memorandums:
August 8, 1995 41791
August 10, 1995 42023
August 25, 1995 45039
Notices:
August 15, 1995 42767
Presidential Determinations:
No. 95–32 of July 28, 1995 40255
No. 95–33 of July 31, 1995 40257
No. 95–34 of August 3, 1995 44721
No. 95–35 of August 10, 1995 44723
No. 95–36 of August 14, 1995 44725

4 CFR

21 40737

5 CFR

316 39101
351 44253
430 43936
432 43936
451 43936
531 43936
532 40744
581 42425
1201 .....40744, 43001, 44254
1320 44978
2640 44706

Proposed Rules:
315 43724
2421 39878
2422 39878

7 CFR

51 39241
272 .....43347, 43513
273 .....43347, 43513
301 .....39101, 39835, 40053, 40993, 44415
319 39101
400 .....40054, 40055
401 40055
402 40055
404 40055
718 44255
792 43705
800 39242
802 42429
905 40056
915 42769
916 43350
917 43350
922 39104
923 39104
924 39104
927 42771
928 43351
929 40745
931 40058
932 42772
944 42772
948 .....39105, 40259
959 .....40747, 42774
981 .....40059, 42776
982 40061
984 40063
989 39837
993 39107
997 43353
1004 43953
1126 40260
1413 .....43001, 44255
1414 44255
1415 44255
1416 44255
1421 43001
1755 44727
3015 44122
3019 44122

Proposed Rules:
17 43566
58 40115
273 40311
319 .....39888, 39889, 42814
340 43567
352 42814
353 42472
354 42472
920 44282
987 40116
1005 43986
1007 42815
1011 43986
1030 41833
1040 43066
1046 .....43986, 43994
1065 41833
1068 41833
1076 41833
1079 41833
1280 40313
1924 44283
1942 44283
1948 44283

1980 44283
3403 42990

8 CFR

103 40064
208 44260
212 ..... 40064, 44260
214 44260
217 40064
235 40064
236 44260
242 ..... 43954, 44260
245 44260
248 44260
264 40064
274a 44260
286 40064
299 ..... 43954, 44260

9 CFR

77 44416
78 44416
117 43355
160 39840
161 39840
201 42777
203 42777
381 ..... 43356, 44396

Proposed Rules:

94 ..... 39890, 43409, 44785
113 43573
201 43411
308 ..... 41029, 42816
310 ..... 41029, 42816
318 ..... 41029, 42816
320 ..... 41029, 42816
325 ..... 41029, 42816
326 ..... 41029, 42816
327 ..... 41029, 42816
381 ..... 41029, 42816

10 CFR

55 43358
810 43002

Proposed Rules:

20 40117
30 40117
40 40117
50 ..... 40117, 43726
51 40117
52 43726
60 42079
70 40117
72 ..... 40117, 42079
73 42079
75 42079
100 43726
436 44286
490 40539
600 40323

11 CFR

106 42429
9002 42429
9003 42429
9004 42429
9006 42429
9007 42429
9008 42429
9032 42429
9033 42429
9034 42429
9036 42429
9037 42429
9038 42429
9039 42429

12 CFR

3 ..... 39226, 39490, 43191
6 39226
208 ..... 39226, 39490
219 44144
225 39226
325 ..... 39226, 39490
327 ..... 42680, 42741
565 39226
567 ..... 39226, 42025
611 42029
618 42029
620 42029
934 42779

Proposed Rules:

3 39495
208 39495
220 43726
325 39495
327 40776
500 44442
504 44442
510 44442
515 44442
529 44442
533 44442
543 44442
545 44442
552 44442
556 44442
562 44442
563 44442
563d 44442
563g 44442
567 44442
571 44442
583 44442
584 44442
701 39273
741 39274

13 CFR

120 42779
122 ..... 42779, 42781

Proposed Rules:

116 42817

14 CFR

25 ..... 39625, 42029, 44748
39 ..... 39243, 39245, 39627, 39628, 39631, 39633, 39635, 39637, 39842, 40748, 40750, 40753, 40755, 40993, 41793, 41795, 43359, 43361, 43362, 43364, 43517, 43519, 43707, 43963, 44417, 44419, 44421, 44423
71 ..... 39247, 39638, 39639, 40069, 41798, 41799, 42031, 42429, 42430, 42431, 43366
73 ..... 40994, 43708
95 43964
97 ..... 40070, 40071, 42781, 42784, 43965
189 39614
200 43521
201 43521
203 43521
204 43521
206 43521
215 43521
232 43521
271 43521
272 43521
291 43521
294 43521
296 43521
297 43521
298 43521
300 43521
313 43521
324 43521
325 43521
372 43521
379 43521
398 43521
399 43521

Proposed Rules:

Ch. I 43726, 44142
1 41160
25 ..... 44387, 44998
33 43727
39 ..... 40118, 40782, 40783, 41030, 41868, 42479, 43089, 43413, 43415, 43417, 43728, 43730, 43995, 44450
61 ..... 41160, 42764
63 42764
65 42764
71 ..... 39280, 39893, 39894, 40020, 40227, 43420
108 42764
121 ..... 41992, 42764
125 41992
127 41992
135 ..... 41992, 42764
141 41160
143 41160
145 41992

15 CFR

292 44750
902 39248
905 39249

Proposed Rules:

801 40336
806 39128
944 40540
990 ..... 39804, 43574

16 CFR

3 39640
14 42031
234 40262
237 40263
242 40265
248 40267
252 40453
305 43367
310 43842
800 40704
803 40704
1117 41799
1500 ..... 40785, 41801

Proposed Rules:

3 42481
311 44712

17 CFR

30 41802
200 39643
240 40994

Proposed Rules:

270 ..... 39574, 39592
274 39574

18 CFR

35 39251
284 39252

Proposed Rules:

35 43997
141 43998
284 39895
388 43998

19 CFR

19 42431
101 41804
122 41804
132 39108
191 40995

20 CFR

335 40073
404 ..... 42431, 43709
422 42431

Proposed Rules:

230 ..... 42482, 43999
345 43300
366 42818
367 42818
416 40542

21 CFR

73 41805
172 44755
175 39645
176 ..... 39645, 44756
177 ..... 39647, 40073
178 ..... 39648, 43370, 44757
310 42435
510 ..... 39846, 40454, 40455
520 ..... 39846, 40454
522 39846
529 40455
524 39846
558 ..... 39846, 39847
882 43967
1309 42436
1310 42436

Proposed Rules:

101 44786
201 44182
208 44182
310 44787
314 44182
341 44787
601 44182
1301 43732
1303 43732
1304 43732
1305 43732
310 ..... 43091, 43421
341 ..... 43091, 43421
801 41314
803 41314
804 41314
897 41314
898 44451

22 CFR

41 42034
213 40456

23 CFR

635 44271

24 CFR

25 39236
26 39236
100 43322
202 39236
203 42754
206 42754
300 42012
310 42012

320 42012
330 42012
340 42012
350 42012
360 42012
370 42012
380 42012
390 42012
395 42012
586 42972
888 ....42222, 42230
1710 42436

Proposed Rules:

982 43840
888 42290

26 CFR

1 ....39649, 40075, 40997, 42785, 43531, 44274
20 ....43531, 43554
25 43531
31 39109
40 ....40079, 44758
48 40079
301 ....39652, 40086
602 ....40079, 40997, 43531, 43554

Proposed Rules:

1 ....39896, 39902, 40792, 40794, 40796, 42819, 43091
20 43574
40 44788
301 ....39903, 43091

28 CFR

2 ....40092, 40094, 40270
49 44279

Proposed Rules:

16 44788

29 CFR

20 41016
1613 43371
1614 43371
1910 40457
1926 39254
1952 43969
2200 41805
2606 39848
2609 39848
2619 42037
2676 42037

Proposed Rules:

1910 39281
2510 39208
2606 44158
2615 41033
2616 44158
2617 44158
2629 44158

30 CFR

901 42040
925 43972
946 40271
948 42437

Proposed Rules:

206 ....40120, 40127, 43735
250 ....41034, 42819
260 43735
256 41034
931 43576
944 43577

31 CFR

0 42042
103 44144
515 39255

Proposed Rules:

1 40797
103 ....39665, 44146, 44151

32 CFR

92 40277
356 44277
358 44277
372 44277
393 44277

Proposed Rules:

220 39285

33 CFR

100 ....40096, 43976, 43978, 44424, 44428
110 43372
117 ....40097, 43373
126 39788
127 39788
137 39849
151 43374
155 43374
156 45006
165 ....40458, 41017, 41018, 42787, 42788, 42790, 43372, 44428, 44429, 44430
322 44760
334 43378

Proposed Rules:

1 39130
117 ....39287, 40138, 42826, 42827
165 40543
183 40545

34 CFR

76 41286
366 39216
667 41286
668 42408

Proposed Rules:

98 44696
345 40688
371 42490

36 CFR

7 39257
242 ....40569, 40461
1220 44634
1222 44634
1228 44634
1234 44634
1253 40416

Proposed Rules:

13 40798
242 ....42085, 44000
1415 39905

37 CFR

1 ....41018, 44120
2 ....41018, 44120
7 ....41018, 44120
401 41811

Proposed Rules:

1 ....41035, 42352
3 42352
5 42352

38 CFR

2 40756

39 CFR

111 ....39111, 43005

40 CFR

9 ....40474, 42791, 43244, 43880
51 ....40098, 40465, 44762
52 ....39115, 39258, 39851, 39855, 39857, 40101, 40285, 40286, 40291, 40292, 40465, 40758, 42042, 43008, 43012, 43015, 43017, 43020, 43379, 43383, 43386, 43388, 43394, 43396, 43710, 43713, 43714, 44277, 44431
60 43244
61 ....39263, 43396
63 43244
70 ....39862, 40101, 42045
75 40295
80 40006
81 ....39115, 39258, 39857, 40297, 43017, 43020
82 40420
86 ....39264, 40474, 43880
93 ....40098, 44762
122 40230
124 40230
131 44120
136 ....39586, 44670
180 ....40498, 40500, 40503, 42443, 42446, 42447, 42449, 42450, 42453, 42456, 42458, 43718
185 ....40503, 42453, 42456, 42458, 42460
186 42460
195 41813
258 40104
261 41817
271 ....41818, 42046, 43979
272 44278
712 39654

Proposed Rules:

Ch. I 39668, 44290
9 41870
51 ....39297, 43092, 44790
52 ....39298, 39907, 39910, 39911, 40139, 40338, 40799, 42130, 42491, 43092, 43099, 43100, 43104, 43421, 43423, 43424, 43737, 44452
60 41870
61 ....39299, 43424
70 ....39911, 40140, 44799, 44805
80 40009
81 ....39298, 39911, 40338, 43104, 44452
85 43092
93 44790
144 44652
146 44652
148 43654
180 ....39299, 39302, 40545, 42494, 43738
185 39302
194 39131
258 40799
260 41870
262 41870
264 41870
265 41870
268 43654
270 41870
271 ....41870, 43654
300 ....41051, 43424
302 40042
355 40042
372 ....39132, 44000
433 40145
438 40145
464 40145

41 CFR

Ch. 114 39864

42 CFR

409 39122
411 41914
484 39122

Proposed Rules:

412 39304
413 39304
424 39304
485 39304
489 39304

43 CFR

Public Land Orders:

7149 39655
7150 39655
7151 42792
7152 42792
7153 42067
7154 44435
7155 44763
7156 44763
7158 44764

44 CFR

64 ....39123, 42462
65 ....39865, 39867, 44765, 44767
67 ....39868, 44769
206 43740

Proposed Rules:

10 39694
67 ....39912, 44812

45 CFR

11 40505
1160 42464
1355 40505

46 CFR

30 ....39267, 40227, 41157
67 40238
150 ....39267, 40227, 41157
160 39268
310 44438
387 ....42466, 43720
514 44436
583 44436

Proposed Rules:

5 39306
10 39306
12 ....39306, 40145
15 39306
16 ....40145, 43426
32 43427

47 CFR

1 ....39268, 39656, 40712
2 39657
15 40760
26 40712
63 44280
64 42068
68 42068
73 ....39127, 39659, 40105, 40301, 40761, 41027, 42069, 43026, 43027, 43028, 43781, 44439, 44773

87 40227
90 ....39660, 43720
Proposed Rules:
1 39134
21 43740
25 43740
36 44296
61 39136
64 39136
69 ....39136, 44296
73 ....39141, 39142, 39143, 39308, 40146, 40812, 40813, 40814, 41870, 42130, 44003, 44004, 44820
95 43105

48 CFR

Ch. I 42648
Ch. II 40105
1 ....42649, 42664
2 42652
4 ....42649, 42652
5 42652
6 ....42652, 42664
14 ....42649, 42652
15 ....42649, 42652, 43721
17 42652
19 42652
25 ....42649, 42652
31 ....42657, 42659, 42662
36 42652
37 42659
42 ....42657, 42659, 42663
50 42649
51 42652
52 ....42649, 42652, 42657, 42659, 42663
204 43191
206 40106
207 40106
215 ....40106, 43191
217 43191
219 ....40106, 41157, 43563
227 41157
235 40107
252 40106
501 ....40107, 42793
503 ....42793, 42801
504 42801
505 ....42793, 42801
506 42793
507 ....42793, 42801
510 42801
512 42801
513 42801
514 ....42801, 44387
515 42801
519 ....39660, 42793
523 42801
528 42801
529 42801
532 42801
536 42801
543 42801
546 42801
552 ....39660, 42793
570 42793
601 39661
602 39661
605 39661
606 39661
609 39661
610 39661
613 39661
616 39661
619 39661
625 39661
636 39661
637 39661
653 39661
939 39871
1516 43402
1552 43402
1801 40508
1803 40508
1804 40508
1805 40508
1808 40508
1809 40508
1810 40508
1812 40508
1814 40508
1815 40508
1819 40508
1822 40508
1825 40508
1827 40508
1829 40508
1831 40508
1833 40508
1835 40508
1837 40508
1839 40508
1846 40508
1849 40508
1850 40508
1852 40508
1853 40508
1870 40508
2801 40108
2802 40108
2804 40108
2805 40108
2807 40108
2808 40108
2809 40108
2810 40108
2812 40108
2813 40108
2814 40108
2815 40108
2816 40108
2817 40108
2828 40108
2829 40108
2830 40108
2832 40108
2833 40108
2835 40108
2845 40108
2852 40108
2870 40108
Proposed Rules:
31 43508
204 43756
209 40146
216 40146
223 43756
246 40146
252 ....40146, 43756
1516 42828
1552 42828

49 CFR

10 43982
171 ....39608, 40030
172 ....39608, 39991, 40030
173 40030
178 40030
192 ....41821, 43028
390 ....40761, 44439
501 43028
571 ....41028, 42804, 43031
572 43031
575 39269
589 43031
653 39618
654 39618
800 40111
830 40111
831 40111
1023 39874
Proposed Rules:
5 39919
107 43430
192 44821
195 ....44821, 44822, 44824
229 44457
571 ....39308, 42496, 42830
575 42496
1051 40548
1220 40548
1312 39143

50 CFR

2 40301
17 43721
18 42805
20 ....43314, 43318, 45020
23 43405
100 ....40459, 40461
204 39248
210 39271
216 39271
217 ....42809, 44780
222 43721
227 ....42809, 44780
250 39271
270 39271
285 42469
301 ....39663, 40227, 43563
380 43062
604 39271
625 40113
640 41828
661 ....39991, 40302, 42469, 43564, 43984
662 40303
663 39875
671 40763
672 ....40304, 40763, 43494
673 42070
675 ....39877, 40304, 40763, 43494, 43984
676 ....40304, 40763
677 ....40763, 42470
Proposed Rules:
Ch. VI 40340, 40815
17 ....39309, 39314, 39326, 39337, 40149, 40339, 40549, 42140
20 ....42960, 44463
23 39347
32 42668
100 ....42085, 44000
227 43106
402 39921
625 42830
630 44824
638 40150
641 44825
642 39698
646 40815
649 40341
650 40341
651 40341
663 39144
675 43579
678 44824
683 43106
697 39700