7–19–95
Vol. 60 No. 138
Pages 36951–37322

federal register

Wednesday
July 19, 1995

Briefings on How To Use the Federal Register
For information on briefings in Washington, DC, see announcement on the inside cover of this issue.

FEDERAL REGISTER Published daily, Monday through Friday, (not published on Saturdays, Sundays, or on official holidays), by the Office of the Federal Register, National Archives and Records Administration, Washington, DC 20408, under the Federal Register Act (49 Stat. 500, as amended; 44 U.S.C. Ch. 15) and the regulations of the Administrative Committee of the Federal Register (1 CFR Ch. I). Distribution is made only by the Superintendent of Documents, U.S. Government Printing Office, Washington, DC 20402.

The **Federal Register** provides a uniform system for making available to the public regulations and legal notices issued by Federal agencies. These include Presidential proclamations and Executive Orders and Federal agency documents having general applicability and legal effect, documents required to be published by act of Congress and other Federal agency documents of public interest. Documents are on file for public inspection in the Office of the Federal Register the day before they are published, unless earlier filing is requested by the issuing agency.

The seal of the National Archives and Records Administration authenticates this issue of the **Federal Register** as the official serial publication established under the Federal Register Act. 44 U.S.C. 1507 provides that the contents of the **Federal Register** shall be judicially noticed.

The **Federal Register** is published in paper, 24x microfiche and as an online database through *GPO Access*, a service of the U.S. Government Printing Office. The online database is updated by 6 a.m. each day the **Federal Register** is published. The database includes both text and graphics from Volume 59, Number 1 (January 2, 1994) forward. It is available on a Wide Area Information Server (WAIS) through the Internet and via asynchronous dial-in. The annual subscription fee for a single workstation is $375. Six-month subscriptions are available for $200 and one month of access can be purchased for $35. Discounts are available for multiple-workstation subscriptions. To subscribe, Internet users should telnet to swais.access.gpo.gov and login as newuser (all lower case); no password is required. Dial-in users should use communications software and modem to call (202) 512–1661 and login as swais (all lower case); no password is required; at the second login prompt, login as newuser (all lower case); no password is required. Follow the instructions on the screen to register for a subscription for the **Federal Register** Online via *GPO Access.* For assistance, contact the *GPO Access* User Support Team by sending Internet e-mail to help@eids05.eids.gpo.gov, or a fax to (202) 512–1262, or by calling (202) 512–1530 between 7 a.m. and 5 p.m. Eastern time, Monday through Friday, except Federal holidays.

The annual subscription price for the **Federal Register** paper edition is $494, or $544 for a combined **Federal Register**, Federal Register Index and List of CFR Sections Affected (LSA) subscription; the microfiche edition of the **Federal Register** including the Federal Register Index and LSA is $433. Six month subscriptions are available for one-half the annual rate. The charge for individual copies in paper form is $8.00 for each issue, or $8.00 for each group of pages as actually bound; or $1.50 for each issue in microfiche form. All prices include regular domestic postage and handling. International customers please add 25% for foreign handling. Remit check or money order, made payable to the Superintendent of Documents, or charge to your GPO Deposit Account, VISA or MasterCard. Mail to: New Orders, Superintendent of Documents, P.O. Box 371954, Pittsburgh, PA 15250–7954.

There are no restrictions on the republication of material appearing in the **Federal Register.**

How To Cite This Publication: Use the volume number and the page number. Example: 60 FR 12345.

SUBSCRIPTIONS AND COPIES

PUBLIC

Subscriptions:

Paper or fiche	**202–512–1800**
Assistance with public subscriptions	**512–1806**

Online:

Telnet swais.access.gpo.gov, login as newuser <enter>, no password <enter>; or use a modem to call (202) 512–1661, login as swais, no password <enter>, at the second login as newuser <enter>, no password <enter>.

Assistance with online subscriptions	**202–512–1530**

Single copies/back copies:

Paper or fiche	**512–1800**
Assistance with public single copies	**512–1803**

FEDERAL AGENCIES

Subscriptions:

Paper or fiche	**523–5243**
Assistance with Federal agency subscriptions	**523–5243**

For other telephone numbers, see the Reader Aids section at the end of this issue.

THE FEDERAL REGISTER

WHAT IT IS AND HOW TO USE IT

FOR: Any person who uses the Federal Register and Code of Federal Regulations.

WHO: The Office of the Federal Register.

WHAT: Free public briefings (approximately 3 hours) to present:

1. The regulatory process, with a focus on the Federal Register system and the public's role in the development of regulations.
2. The relationship between the Federal Register and Code of Federal Regulations.
3. The important elements of typical Federal Register documents.
4. An introduction to the finding aids of the FR/CFR system.

WHY: To provide the public with access to information necessary to research Federal agency regulations which directly affect them. There will be no discussion of specific agency regulations.

WASHINGTON, DC

WHEN: July 27 at 9:00 am
WHERE: Office of the Federal Register Conference Room, 800 North Capitol Street NW., Washington, DC (3 blocks north of Union Station Metro)
RESERVATIONS: 202–523–4538

WHEN: September 12 at 9:00 am
WHERE: Office of the Federal Register Conference Room, 800 North Capitol Street NW., Washington, DC (3 blocks north of Union Station Metro)
RESERVATIONS: 202–523–4538

Printed on recycled paper containing 100% post consumer waste

Contents

Federal Register

Vol. 60, No. 138

Wednesday, July 19, 1995

Agency for International Development
See International Development Cooperation Agency

Agricultural Marketing Service
RULES
Raisins produced from grapes grown in California, 36951–36952

Agriculture Department
See Agricultural Marketing Service
See Commodity Credit Corporation
See Forest Service

Army Department
See Engineers Corps
NOTICES
Patent licenses; non-exclusive, exclusive, or partially exclusive:
Japanese encephalitis cDNA clones and vaccines, 37055

Commerce Department
See Foreign-Trade Zones Board
See International Trade Administration
See National Oceanic and Atmospheric Administration

Commodity Credit Corporation
PROPOSED RULES
Export programs:
Supplier credit guarantee program, 37025–37037

Defense Department
See Army Department
See Defense Nuclear Agency
See Engineers Corps
RULES
Federal Acquisition Regulation (FAR):
Electronic contracting; and simplified acquisition procedures and FACNET requirements, 37292
NOTICES
Meetings:
Wage Committee, 37054–37055

Defense Nuclear Agency
NOTICES
Senior Executive Service:
Performance Review Board; membership, 37055

Education Department
NOTICES
Grants and cooperative agreements; availability, etc.:
Federal Pell grant program, etc.—
Need analysis methodology; correction, 37055–37056
Indian education programs—
Demonstration grants for children, professional development and adult education (1995 FY), 37056–37057

Employment and Training Administration
NOTICES
Adjustment assistance:
Alsco Amerimark Building Products, 37080–37081
Buddy L Inc. et al., 37081–37082
Adjustment assistance and NAFTA transitional adjustment assistance:
GE Control Products et al., 37082–37084

Energy Department
See Energy Efficiency and Renewable Energy Office
See Federal Energy Regulatory Commission

Energy Efficiency and Renewable Energy Office
RULES
Energy conservation:
Renewable energy production incentives, 36959–36966

Engineers Corps
PROPOSED RULES
Administrative appeals process, 37280–37290

Environmental Protection Agency
RULES
Air quality implementation plans; approval and promulgation; various States:
Michigan, 37013
Oregon, 37013–37015
Pennsylvania, 37015–37018
Pesticides; tolerances in food, animal feeds, and raw agricultural commodities:
Anagrapha falcifera multi-nuclear polyhedrosis virus inclusion bodies, 37019–37020
Burkholderia (Pseudomonas) cepacia type Wisconsin, 37020–37022
PROPOSED RULES
Air quality implementation plans; approval and promulgation; various States:
Oregon, 37040–37041
NOTICES
Pesticide registration, cancellation, etc.:
Ethoprop Technical, etc., 37063–37064
Pesticides; emergency exemptions, etc.:
Cyfluthrin, etc., 37061–37063

Executive Office of the President
See Presidential Documents

Federal Aviation Administration
RULES
Airworthiness directives:
Aerospatiale, 36971–36972
Beech, 36972–36974
Boeing, 36974–36983
British Aerospace, 36983–36984
Learjet, 36984–36986
McDonnell Douglas, 36986–36990
Airworthiness standards:
Special conditions—
Boeing Co. models 747–100 and 747–200 airplanes, 36967–36969
McDonnell Douglas Corp. models DC–10–30 and DC–10–40 airplanes, 36969–36971
PROPOSED RULES
Airworthiness directives:
Fairchild, 37037–37038
Fokker, 37038–37040

NOTICES
Environmental statements; availability, etc.:
San Jose International Airport, CA, 37123–37124
Meetings:
Aviation Rulemaking Advisory Committee, 37124–37125
Passenger facility charges; applications, etc.:
Albany-Dougherty Aviation Commission, GA, et al., 37125–37127

Federal Communications Commission
RULES
Radio services, special:
Private land mobile services—
Modification of policies governing use of bands below 800 MHz, 37152–37277
PROPOSED RULES
Common carrier services:
Local exchange carriers; intelligent networks, 37041
Radio services, special:
Private land mobile services—
Efficient use of bands below 800 MHz; introduction of market forces; exclusivity, user fees, and competitive bidding options, 37148–37151
Radio stations; table of assignments:
Iowa, 37042
Television stations; table of assignments:
Colorado, 37041–37042

Federal Energy Regulatory Commission
NOTICES
Environmental statements; availability, etc.:
Kankakee, IL, 37057
Southern California Edison Co., 37057
Applications, hearings, determinations, etc.:
Algonquin Gas Transmission Co., 37058
Black Marlin Pipeline Co., 37058
East Tennessee Natural Gas Co., 37058
Mid Louisiana Gas Co., 37058–37059
Natural Gas Pipeline Co. of America, 37059
Northwestern Public Service Co., 37060–37061
Northwest Pipeline Corp., 37059–37060
Williston Basin Interstate Pipeline Co., 37061

Federal Highway Administration
RULES
Engineering and traffic operations:
Dire Emergency Supplemental Appropriations Act—
Federal-aid highway projects; advance construction, 36991–36993

Federal Housing Finance Board
RULES
Housing opportunity allowance program and nondiscrimination in federally assisted programs; CFR parts removed, 36966–36967

Federal Maritime Commission
NOTICES
Meetings; Sunshine Act, 37145

Federal Reserve System
NOTICES
Agency information collection activities under OMB review, 37064–37066

Fish and Wildlife Service
RULES
Alaska National Wildlife Refuges:
Kodiak National Wildlife Refuge; O'Malley River Area; seasonal closure, 37308–37311
PROPOSED RULES
Migratory bird hunting:
Migratory game bird hunting regulations; and Service Migratory Bird Regulations Committee; meetings
Republication, 37314–37318
NOTICES
Environmental statements; availability, etc.:
Incidental take permits—
Iron County, UT; Utah prairie dog, 37067–37068

Foreign-Trade Zones Board
NOTICES
Applications, hearings, determinations, etc.:
Texas
Southwestern Refining; crude oil refinery, 37047

Forest Service
NOTICES
Boundary establishment, descriptions, etc.:
Pinhook Purchase Unit, FL; correction, 37047

General Services Administration
RULES
Federal Acquisition Regulation (FAR):
Electronic contracting; and simplified acquisition procedures and FACNET requirements, 37292

Health and Human Services Department
See Health Care Financing Administration

Health Care Financing Administration
NOTICES
Agency information collection activities under OMB review, 37066–37067

Housing and Urban Development Department
PROPOSED RULES
Public and Indian housing:
Vacancy units included in eligibility computation under Performance Funding System, 37294–37306

Interior Department
See Fish and Wildlife Service
See Land Management Bureau
See Minerals Management Service
See National Park Service
See Surface Mining Reclamation and Enforcement Office
NOTICES
Senior Executive Service:
Performance Review Board; membership, 37067

Internal Revenue Service
RULES
Income taxes:
Club dues—
Deduction disallowance, 36993–36995
Property transfer deductions, 36995–36998
NOTICES
Elderly tax counseling program; application packages; availability, 37143–37144

International Development Cooperation Agency
RULES
Food commodities transfer for food use in disaster relief, economic development, and other assistance; booking guidelines, 36990–36991

International Trade Administration
NOTICES
Antidumping:
Disposable pocket lighters from—
China, 37047–37051
Applications, hearings, determinations, etc.:
City University of Wisconsin et al., 37051
National Renewable Energy Laboratory et al., 37051
University of—
Minnesota, 37051–37052

International Trade Commission
NOTICES
Import investigations:
Canned pineapple fruit from—
Thailand, 37073
Meetings; Sunshine Act, 37145

Interstate Commerce Commission
NOTICES
Environmental statements; availability, etc.:
CSX Transportation, Inc., et al., 37073–37074

Justice Department
NOTICES
Agency information collection activities under OMB review, 37074–37076
Pollution control; consent judgments:
A.F.F. McQuay et al., 37076
A.O.W. Capitol Associates et al., 37076–37077
Amtreco, Inc., et al., 37077
Bio-Energy Corp., 37077
Maiorano, Louis, Sr., et al., 37077–37078
U.S. Ecology, Inc., et al., 37078

Labor Department
See Employment and Training Administration
NOTICES
Agency information collection activities under OMB review, 37078–37080

Land Management Bureau
NOTICES
Opening of public lands:
California, 37068
Survey plat filings:
Colorado, 37068–37069
Idaho, 37069
Withdrawal and reservation of lands:
California, 37069–37070

Maritime Administration
NOTICES
Mortgagees and trustees; applicants approval, disapproval, etc.:
First National Bank of Maryland, 37127

Minerals Management Service
NOTICES
Meetings:
Royalty-in-kind procedures, expanded use; workshops, 37070–37072

National Aeronautics and Space Administration
RULES
Federal Acquisition Regulation (FAR):
Electronic contracting; and simplified acquisition procedures and FACNET requirements, 37292

National Highway Traffic Safety Administration
PROPOSED RULES
Motor vehicle safety standards:
Rear license plate mounting location; petition denied, 37042–37043
NOTICES
Meetings:
International harmonization of safety standards, 37127–37128

National Oceanic and Atmospheric Administration
RULES
Fishery conservation and management:
Atlantic shark, 37023–37024
Pacific Coast groundfish, 37022–37023
PROPOSED RULES
Fishery conservation and management:
Ocean salmon off coasts of Washington, Oregon, and California, 37045–37046
South Atlantic golden crab, 37044–37045
Marine mammals:
Commercial fishing operations—
Commercial fisheries authorization; list of fisheries categorized according to frequency of incidental takes; correction, 37043–37044
NOTICES
Permits:
Endangered and threatened species, 37052–37053
Marine mammals, 37053–37054
Marine mammals and endangered and threatened species, 37053

National Park Service
NOTICES
Meetings:
Cane River National Heritage Area Commission, 37072–37073

Nuclear Regulatory Commission
RULES
Production and utilization facilities; domestic licensing:
Nuclear power reactors—
Technical specifications; criteria for determining content, 36953–36959
NOTICES
Environmental statements; availability, etc.:
Southern California Edison Co., 37110–37112
Operating licenses, amendments; no significant hazards considerations; biweekly notices, 37084–37109
Reports; availability, etc.:
Non-power reactors; licensing applications format and content guidance and review plan and acceptance criteria, 37109
Applications, hearings, determinations, etc.:
Carolina Power & Light Co., 37109
Georgia Power Co. et al., 37109–37110

Panama Canal Commission
NOTICES
Agency information collection activities under OMB review, 37112

Pension Benefit Guaranty Corporation
RULES
Single-employer plans:
Disclosure to participants
Correction, 36998

Presidential Documents
PROCLAMATIONS
Special observances:
Captive Nations Week (Proc. 6810), 37321

Research and Special Programs Administration
NOTICES
Hazardous materials:
Applications; exemptions, renewals, etc., 37128–37143

Securities and Exchange Commission
NOTICES
Meetings:
Capital Formation and Regulatory Processes Advisory Committee, 37112
Self-regulatory organizations; proposed rule changes:
American Stock Exchange, Inc., 37112–37113
Boston Stock Exchange, Inc., 37114–37115
Chicago Stock Exchange, Inc., 37115–37117
National Association of Securities Dealers, Inc., 37117–37122

Small Business Administration
NOTICES
Applications, hearings, determinations, etc.:
Shenandoah Venture Capital, L.P., 37122
UBS Partners, Inc., 37122

Surface Mining Reclamation and Enforcement Office
RULES
Permanent program and abandoned mine land reclamation plan submissions:
Montana, 36998–37002
Utah, 37002–37012

Transportation Department
See Federal Aviation Administration
See Federal Highway Administration
See Maritime Administration
See National Highway Traffic Safety Administration
See Research and Special Programs Administration
NOTICES
Agency information collection activities under OMB review, 37122–37123

Treasury Department
See Internal Revenue Service

Veterans Affairs Department
RULES
Disabilities rating schedules:
Chronic fatigue syndrome, 37012–37013

Separate Parts In This Issue

Part II
Federal Communications Commission, 37148–37277

Part III
Department of the Army, Corps of Engineers, 37280–37290

Part IV
Department of Defense, General Services Administration, and National Aeronautics and Space Administration, 37292

Part V
Department of Housing and Urban Development, 37294–37306

Part VI
Department of Interior, Fish and Wildlife Service, 37308–37311

Part VII
Department of Interior, Fish and Wildlife Service, 37314–37318

Part VIII
The President, 37321

Reader Aids
Additional information, including a list of public laws, telephone numbers, and finding aids, appears in the Reader Aids section at the end of this issue.

Electronic Bulletin Board
Free **Electronic Bulletin Board** service for Public Law numbers, **Federal Register** finding aids, and a list of documents on public inspection is available on 202–275–1538 or 275–0920.

CFR PARTS AFFECTED IN THIS ISSUE

A cumulative list of the parts affected this month can be found in the Reader Aids section at the end of this issue.

3 CFR
Proclamations:
6810 37321

7 CFR
989 36951
Proposed Rules:
1493 37025

10 CFR
50 36953
451 36959

12 CFR
937 36966
939 36966

14 CFR
25 (2 documents) 36967, 36969
39 (8 documents) 36971, 36972, 36974, 36976, 36981, 36983, 36984, 36986
Proposed Rules:
39 (2 documents) 37037, 37038

22 CFR
211 36990

23 CFR
630 36991

24 CFR
Proposed Rules:
950 37294
990 37294

26 CFR
1 (2 documents) 36993, 36995
602 36995

29 CFR
2627 36998

30 CFR
926 36998
944 37002

33 CFR
Proposed Rules:
320 37280
326 37280
331 37280

38 CFR
4 37012

40 CFR
52 (3 documents) 37013, 37015
180 (2 documents) 37019, 37020
Proposed Rules:
52 37040

47 CFR
90 37152
Proposed Rules:
64 37041
73 (2 documents) 37041, 37042
90 37148

48 CFR
Ch. 1 37292

49 CFR
Proposed Rules:
571 37042

50 CFR
36 37308
663 37022
678 37023
Proposed Rules:
20 37314
216 37043
229 37043
Ch. VI 37044
661 37045

Rules and Regulations

Federal Register
Vol. 60, No. 138
Wednesday, July 19, 1995

This section of the FEDERAL REGISTER contains regulatory documents having general applicability and legal effect, most of which are keyed to and codified in the Code of Federal Regulations, which is published under 50 titles pursuant to 44 U.S.C. 1510.

The Code of Federal Regulations is sold by the Superintendent of Documents. Prices of new books are listed in the first FEDERAL REGISTER issue of each week.

DEPARTMENT OF AGRICULTURE

Agricultural Marketing Service

7 CFR Part 989

[FV95–989–2FIR]

Raisins Produced From Grapes Grown In California; Final Free and Reserve Percentages for the 1994–95 Crop Year for Natural (sun-dried) Seedless Raisins

AGENCY: Agricultural Marketing Service, USDA.

ACTION: Final rule.

SUMMARY: The Department of Agriculture (Department) is adopting, without change, the provisions of an interim final rule which established final free and reserve percentages for 1994–95 crop Natural (sun-dried) Seedless raisins. The percentages are 77 percent free and 23 percent reserve. These percentages are intended to stabilize supplies and prices and to help counter the destabilizing effects of the burdensome oversupply situation facing the raisin industry. This rule was recommended by the Raisin Administrative Committee (Committee), the body which locally administers the marketing order.

EFFECTIVE DATE: August 18, 1995.

FOR FURTHER INFORMATION CONTACT: Richard Van Diest, Marketing Specialist, California Marketing Field Office, Fruit and Vegetable Division, AMS, USDA, 2202 Monterey Street, suite 102B, Fresno, California 93721; telephone: 209–487–5901 or Mark A. Slupek, Marketing Specialist, Marketing Order Administration Branch, Fruit and Vegetable Division, AMS, USDA, room 2523–S, P.O. Box 96456, Washington, DC 20090–6456; telephone: 202–205–2830.

SUPPLEMENTARY INFORMATION: This final rule is issued under marketing agreement and Order No. 989 (7 CFR part 989), both as amended, regulating the handling of raisins produced from grapes grown in California, hereinafter referred to as the ''order.'' The order is effective under the Agricultural Marketing Agreement Act of 1937, as amended (7 U.S.C. 601–674), hereinafter referred to as the ''Act.''

The Department of Agriculture (Department) is issuing this rule in conformance with Executive Order 12866.

This final rule has been reviewed under Executive Order 12778, Civil Justice Reform. Under the marketing order provisions now in effect, final free and reserve percentages may be established for raisins acquired by handlers during the crop year. This action finalizes final free and reserve percentages for Natural (sun-dried) Seedless raisins for the 1994–95 crop year, beginning August 1, 1994, through July 31, 1995. This final rule will not preempt any State or local laws, regulations, or policies, unless they present an irreconcilable conflict with this rule.

The Act provides that administrative proceedings must be exhausted before parties may file suit in court. Under section 608c(15)(A) of the Act, any handler subject to an order may file with the Secretary a petition stating that the order, any provision of the order, or any obligation imposed in connection with the order is not in accordance with law and requesting a modification of the order or to be exempt therefrom. Such handler is afforded the opportunity for a hearing on the petition. After the hearing, the Secretary would rule on the petition. The Act provides that the district court of the United States in any district in which the handler is an inhabitant, or has his/her principal place of business, has jurisdiction in equity to review the Secretary's ruling on the petition, provided a bill in equity is filed not later than 20 days after the date of the entry of the ruling.

Pursuant to requirements set forth in the Regulatory Flexibility Act (RFA), the Administrator of the Agricultural Marketing Service (AMS) has considered the economic impact of this action on small entities.

The purpose of the RFA is to fit regulatory actions to the scale of business subject to such actions in order that small businesses will not be unduly or disproportionately burdened. Marketing orders issued pursuant to the Act, and rules issued thereunder, are unique in that they are brought about through group action of essentially small entities acting on their own behalf. Thus, both statutes have small entity orientation and compatibility.

There are approximately 20 handlers of California raisins who are subject to regulation under the raisin marketing order, and approximately 4,500 producers in the regulated area. Small agricultural service firms have been defined by the Small Business Administration (13 CFR 121.601) as those whose annual receipts (from all sources) are less than $5,000,000, and small agricultural producers are defined as those having annual receipts of less than $500,000. No more than eight handlers, and a majority of producers, of California raisins may be classified as small entities. Twelve of the 20 handlers subject to regulation have annual sales estimated to be at least $5,000,000, and the remaining eight handlers have sales less than $5,000,000, excluding receipts from any other sources.

An interim final rule was published in the **Federal Register** on May 17, 1995 (60 FR 26344), with an effective date of May 17, 1995. That rule established final free and reserve percentages for Natural (sun-dried) Seedless raisins for the 1994–95 crop year. The percentages were established in a new section 989.248 of the rules and regulations in effect under the marketing order. That rule provided a 30-day comment period which ended June 16, 1995. No comments were received.

The order prescribes procedures for computing trade demands and preliminary and final percentages that establish the amount of raisins that can be marketed throughout the season. The regulations apply to all handlers of California raisins. Raisins in the free percentage category may be shipped immediately to any market, while reserve raisins must be held by handlers in a reserve pool for the account of the Committee. Under the order, reserve raisins may be: Sold at a later date by the Committee to handlers for free use; used in diversion programs; exported to authorized countries; carried over as a hedge against a short crop the following year; or disposed of in other outlets noncompetitive with those for free tonnage raisins.

While this rule continues in effect restrictions limiting the amount of Natural (sun-dried) Seedless raisins that enter domestic markets, final free and reserve percentages are intended to lessen the impact of the oversupply situation facing the industry and promote stronger marketing conditions, thus stabilizing prices and supplies and improving grower returns. In addition to the quantity of raisins released under the preliminary percentages and the final percentages, the order specifies methods to make available additional raisins to handlers by requiring sales of reserve pool raisins for use as free tonnage raisins under ''10 plus 10'' offers, and authorizing sales of reserve raisins under certain conditions.

The Department's ''Guidelines for Fruit, Vegetable, and Specialty Crop Marketing Orders'' specifies that 110 percent of recent years' sales should be made available to primary markets each season before recommendations for volume regulation are approved. This goal is met by the establishment of a final percentage which releases 100 percent of the computed trade demand and the additional release of reserve raisins to handlers under ''10 plus 10'' offers. The ''10 plus 10'' offers are two simultaneous offers of reserve pool raisins which are made available to handlers each season. For each such offer, a quantity of raisins equal to 10 percent of the prior year's shipments is made available for free use.

Pursuant to section 989.54(a) of the order, the Committee met on August 15, 1994, to review shipment and inventory data, and other matters relating to the supplies of raisins of all varietal types. The Committee computed a trade demand for each varietal type for which a free tonnage percentage might be recommended. The trade demand is 90 percent of the prior year's shipments of free tonnage and reserve tonnage raisins sold for free use for each varietal type into all market outlets, adjusted by subtracting the carryin of each varietal type on August 1 of the current crop year and by adding to the trade demand the desirable carryout for each varietal type at the end of that crop year. As specified in section 989.154, the desirable carryout for each varietal type shall be equal to the shipments of free tonnage raisins of the prior crop year during the months of August, September, and one half of October. If the prior year's shipments are limited because of crop conditions, the total shipments during that period of time during one of the three years preceding the prior crop year may be used. In accordance with these provisions, the Committee computed and announced a 1994–95 trade demand of 294,422 tons for Natural (sun-dried) Seedless raisins.

As required under section 989.54(b) of the order, the Committee met on October 5, 1994, and computed and announced a preliminary crop estimate and preliminary free and reserve percentages for Natural (sun-dried) Seedless raisins which released 65 percent of the trade demand since the field price had not been established. The preliminary crop estimate and preliminary free and reserve percentages were as follows: 404,677 tons, and 47 percent free and 53 percent reserve. The Committee authorized the Committee staff to modify the preliminary percentages to release 85 percent of the trade demand when the field price was established. The preliminary percentages for Natural (sun-dried) Seedless raisins were adjusted soon thereafter to 62 percent free and 38 percent reserve.

Also at that meeting, the Committee computed and announced preliminary crop estimates and preliminary free and reserve percentages for Dipped Seedless, Oleate and Related Seedless, Golden Seedless, Zante Currant, Sultana, Muscat, Monukka, and Other Seedless raisins. On January 12, 1995, the Committee determined that volume control percentages only were warranted for Zante Currant, Other Seedless, and Natural (sun-dried) Seedless raisins, and it recommended final percentages of 40 percent free and 60 percent reserve for both Zante Currant and Other Seedless raisins. It determined that the supplies of the other varietal types would be less than or close enough to the computed trade demands for each of these varietals. In view of these factors, volume control percentages would not be necessary to maintain market stability for the other varietal types.

Pursuant to section 989.54(c), the Committee may adopt interim free and reserve percentages. Interim percentages may release less than the computed trade demand for each varietal type. Interim percentages for Natural (sun-dried) Seedless raisins of 75 percent free and 25 percent reserve were computed and announced on January 15, 1995. That action released most, but not all, of the computed trade demand for Natural (sun-dried) Seedless raisins.

Under section 989.54(d) of the order, the Committee is required to recommend to the Secretary, no later than February 15 of each crop year, final free and reserve percentages which, when applied to the final production estimate of a varietal type, will tend to release the full trade demand for any varietal type.

The Committee's final estimate of 1994–95 production of Natural (sun-dried) Seedless raisins is 379,972 tons. Dividing the computed trade demand of 294,422 tons by the final estimate of production results in a final free percentage of 77 percent and a final reserve percentage of 23 percent.

The free and reserve percentages established by the interim final rule, and continued in effect, without change, by this rule, apply uniformly to all handlers in the industry, whether small or large, and there are no known additional costs incurred by small handlers. Although raisin markets are limited, they are available to all handlers, regardless of size. The stabilizing effects of the percentages impact both small and large handlers positively by helping them maintain and expand markets.

Based on available information, the Administrator of the AMS has determined that the issuance of this final rule will not have a significant economic impact on a substantial number of small entities.

After consideration of all relevant information presented, including the Committee's recommendations and other information, it is found that finalizing the interim final rule, without change, as published in the **Federal Register** on May 17, 1995 (60 FR 26344) will tend to effectuate the declared policy of the Act.

List of Subjects in 7 CFR Part 989

Grapes, Marketing agreements, Raisins, Reporting and recordkeeping requirements.

For the reasons set forth in the preamble, 7 CFR Part 989 is amended as follows:

PART 989—RAISINS PRODUCED FROM GRAPES GROWN IN CALIFORNIA

Accordingly, the interim final rule adding section 989.248, which was published at 60 FR 26344 on May 17, 1995, is adopted as a final rule without change.

Dated: July 13, 1995.

Sharon Bomer Lauritsen,

Deputy Director, Fruit and Vegetable Division.

[FR Doc. 95–17740 Filed 7–18–95; 8:45 am]

BILLING CODE 3410–02–P

NUCLEAR REGULATORY COMMISSION

10 CFR Part 50

RIN 3150–AF06

Technical Specifications

AGENCY: Nuclear Regulatory Commission.

ACTION: Final rule.

SUMMARY: The Nuclear Regulatory Commission (NRC) is amending its regulations pertaining to technical specifications for nuclear power reactors. The rule codifies criteria for determining the content of technical specifications. Each licensee covered by these regulations may voluntarily use the criteria as a basis to propose the relocation of existing technical specifications that do not meet any of the criteria from the facility license to licensee-controlled documents. The voluntary conversion of current technical specifications in this manner is expected to produce an improvement in the safety of nuclear power plants through a reduction in unnecessary plant transients and more efficient use of NRC and industry resources.

EFFECTIVE DATE: August 18, 1995.

FOR FURTHER INFORMATION CONTACT: Christopher I. Grimes, Chief, Technical Specifications Branch, Division of Project Support, Office of Nuclear Reactor Regulation, U.S. Nuclear Regulatory Commission, Washington, DC 20555–0001, Telephone: (301) 415–1161.

SUPPLEMENTARY INFORMATION:

Background

Section 182a. of the Atomic Energy Act of 1954 (Act), as amended (42 U.S.C. 2232), mandates the inclusion of technical specifications in licenses for the operation of production and utilization facilities. The Act requires that technical specifications include information concerning the amount, kind, and source of special nuclear material; the place of use; and the specific characteristics of the facility. That section also states that technical specifications shall contain information the Commission requires through regulation to enable it to find that the utilization of special nuclear material will be in accord with the common defense and security and will provide adequate protection of public health and safety. Finally, that section requires technical specifications to be made a part of any license issued.

The Commission promulgated § 50.36, ''Technical Specifications,'' which implements section 182a. of the Atomic Energy Act on December 17, 1968 (33 FR 18610). This rule delineates requirements for determining the contents of technical specifications. Technical specifications, at a minimum, must set forth the specific characteristics of the facility and the conditions for its operation that are required to provide adequate protection of the health and safety of the public. Specifically, § 50.36 requires the following:

> Each license authorizing operation of a production or utilization facility of a type described in § 50.21 or § 50.22 will include technical specifications. The technical specifications will be derived from the analyses and evaluation included in the safety analysis report, and amendments thereto, submitted pursuant to § 50.34. The Commission may include such additional technical specifications as the Commission finds appropriate.

Technical specifications cannot be changed by licensees without prior NRC approval. However, since 1969, there has been a trend toward including in technical specifications not only those requirements derived from the analyses and evaluation in the safety analysis report but also essentially all other Commission requirements governing the operation of nuclear power reactors. This extensive use of technical specifications was due in part to a lack of well-defined criteria (in either the body of the rule or in some other regulatory document) for what should be included in technical specifications. Since 1969, this use has contributed to the volume of technical specifications and to the several-fold increase in the number of license amendment applications to effect changes to the technical specifications. It has diverted both NRC staff and licensee attention from the more important requirements in these documents to the extent that it has resulted in an adverse but unquantifiable impact on safety.

On March 30, 1982 (47 FR 13369), the NRC published in the **Federal Register** a proposed amendment to Part 50. The proposed rule would have revised § 50.36, ''Technical Specifications,'' to establish a new system of specifications divided into two general categories. Only those specifications contained in the first general category as technical specifications would have become part of the operating license and would have required prior NRC approval for any changes. Those specifications contained in the second general category would have become supplemental specifications and would not have required prior NRC approval for most changes. The NRC review of the first general category of specifications would have been the same as that currently performed for technical specification changes, which are amendments to the operating license. For the second category, ''supplemental specifications,'' the licensee would have been allowed to make changes within specified conditions without prior NRC approval. The NRC would have reviewed these changes when they were made and would have done so in a manner similar to that currently used for reviewing design changes, tests, and experiments performed under the provisions of § 50.59. Because of difficulties with defining the criteria for dividing the technical specifications into the two categories of the proposed rule and because of other higher priority licensing work, the proposed amendment was deferred.

In the early 1980s, the nuclear industry and the NRC staff began studying whether the existing system of establishing technical specification requirements for nuclear power plants needed improvement. During this period, an NRC task group known as the Technical Specifications Improvement Project (TSIP) and a Subcommittee of the Atomic Industrial Forum's (AIF's) Committee on Reactor Licensing and Safety performed two studies of this issue.[1] The overall conclusion of these studies was that many improvements in the scope and content of technical specifications were needed and that a joint NRC and industry program should be initiated to implement these improvements. Both groups made specific recommendations; these are summarized as follows:

(1) The NRC should adopt the criteria for defining the scope of technical specifications proposed in the AIF and TSIP reports. Those criteria should then be used by the NRC and each of the nuclear steam supply system vendor owners groups to completely rewrite and streamline the existing standard technical specifications (STS). This process would result in the transfer of many requirements from control by technical specification requirements to control by other mechanisms (e.g., the final safety analysis report (FSAR), operating procedures, quality assurance (QA) plan) that would not require a license amendment or prior NRC approval when changes were needed.

[1] SECY–86–10, ''Recommendations for Improving Technical Specifications,'' January 13, 1986, contains both ''Recommendations for Improving Technical Specifications,'' NRC Technical Specifications Improvement Project, September 30, 1985, and ''Technical Specifications Improvements,'' AIF Subcommittee on Technical Specifications Improvements, October 1, 1985.

The new STS should place greater emphasis on human factors principles in order to make the text of the STS clearer and easier to understand. The new STS should also improve the bases section of technical specifications, which gives the purpose for each requirement in the specification.

(2) A parallel program of short-term improvements in both the scope and substance of the existing technical specifications should be initiated in addition to developing new STS as stated in recommendation 1.

On February 6, 1987 (52 FR 3788), the NRC published in the **Federal Register** for public comment an ''Interim Policy Statement on Technical Specification Improvements for Nuclear Power Reactors'' (interim policy statement) containing proposed criteria in response to recommendation 1. These criteria were generally derived from the criteria proposed in the AIF and TSIP reports and were modified slightly on the basis of discussions between the NRC staff and the industry. The public comment period for the interim policy statement expired on March 23, 1987.

The criteria were developed with the intention that they would apply to limiting conditions for operation (LCOs). The NRC staff believed that the safety limits needed to remain unchanged in the technical specifications because of their more direct link to protection of the physical barriers that guard against the uncontrolled release of radioactivity. At the time the criteria were developed, the industry did not wish to address administrative controls and design features in the effort to improve the STS. Later, however, both the industry and the NRC staff realized that it would be beneficial to include upgraded administrative controls and design features in the improved STS, and these were handled separately from the application of the criteria to the LCOs.

The NRC has developed a program for short-term improvements as described in recommendation 2 (above). These are known as ''line-item'' improvements and are generic improvements developed and promulgated by the NRC staff for voluntary adoption by licensees.

Subsequently, improved vendor-specific STS were developed and issued by the NRC in September 1992. The improved STS were published as the following NRC reports:

- NUREG–1430, ''Standard Technical Specifications, Babcock and Wilcox Plants''
- NUREG–1431, ''Standard Technical Specifications, Westinghouse Plants''
- NUREG–1432, ''Standard Technical Specifications, Combustion Engineering Plants''
- NUREG–1433, ''Standard Technical Specifications, General Electric Plants, BWR/4''
- NUREG–1434, ''Standard Technical Specifications, General Electric Plants, BWR/6''

Copies of these NUREGs, as revised, may be purchased from the Superintendent of Documents, U.S. Government Printing Office, by calling (202) 275–2060 or by writing to the Superintendent of Documents, U.S. Government Printing Office, PO Box 37082, Washington, DC 20013–7082. Copies are also available from the National Technical Information Service, 5825 Port Royal Road, Springfield, VA 22161.

These improved STS were the result of extensive technical meetings and discussions among the NRC staff, industry owners groups, vendors, and the Nuclear Management and Resources Council (NUMARC).

On July 22, 1993 (58 FR 39132), the Commission published a ''Final Policy Statement on Technical Specifications Improvements for Nuclear Power Reactors'' (final policy statement), which incorporated experience and lessons learned since publication of the interim policy statement. The Commission has decided not to withdraw the final policy statement because it contains detailed discussions of the four criteria and guidance on how the NRC staff and licensees should apply the criteria.

The interim policy statement identified three criteria to be used to define which of the current technical specification requirements should be retained or included in technical specifications and which LCOs could be relocated to licensee-controlled documents, as follows:

Criterion 1: Installed instrumentation that is used to detect, and indicate in the control room, a significant abnormal degradation of the reactor coolant pressure boundary.

Criterion 2: A process variable, design feature, or operating restriction that is an initial condition of a design basis accident or transient analysis that either assumes the failure of or presents a challenge to the integrity of a fission product barrier.

Criterion 3: A structure, system, or component that is part of the primary success path and which functions or actuates to mitigate a design basis accident or transient that either assumes the failure of or presents a challenge to the integrity of a fission product barrier.

The interim policy statement also stated that, in addition to structures, systems, and components captured by the three criteria, it was the Commission's policy that licensees retain in the technical specifications LCOs for a specified list of systems that operating experience and probabilistic risk assessment (PRA) had generally shown to be important to public health and safety. In the final policy statement, the Commission retained this thought as a fourth criterion as follows:

Criterion 4: A structure, system, or component which operating experience or probabilistic risk assessment has shown to be significant to public health and safety.

As stated in the final policy statement, if a requirement meets any *one* of the four criteria, it should be retained or included in technical specifications.

The final policy statement also addressed comments received on the interim policy statement and described the Commission's intent with regard to use of the criteria and their codification through rulemaking.

This final rule codifies the four criteria contained in the final policy statement for defining the scope of LCOs in technical specifications. These criteria are intended to be consistent with the scope of technical specifications as stated in the Statement of Consideration for the final rule issuing § 50.36 (33 FR 18610, December 17, 1968). The Statement of Consideration discussed the scope of technical specifications as including the following:

> In the revised system, emphasis is placed on two general classes of technical matters: (1) Those related to prevention of accidents, and (2) those related to mitigation of the consequences of accidents. By systematic analysis and evaluation of a particular facility, each applicant is required to identify at the construction permit stage those items that are directly related to maintaining the integrity of the physical barriers designed to contain radioactivity. Such items are expected to be the subjects of Technical Specifications in the operating license.

The first of these two general classes of technical matters to be included in technical specifications is captured by Criteria 1, 4, and, to some extent, Criterion 2, in that they address systems and process variables that alert the operator to a situation when accident initiation is more likely. The second general class of technical matters is explicitly addressed and captured by Criteria 2, 3, and 4. By applying the four criteria contained in this rule, a licensee should capture the conditions for operation of its facility that are required

to meet the principal operative standard in Section 182a. of the Atomic Energy Act, that is, that adequate protection is provided to the health and safety of the public.

The Commission recognizes that the four criteria carry a theme of focusing on the technical requirements for features of controlling importance to safety. Since many of the requirements are of significance to the health and safety of the public, this rule reflects the subjective statement of the purpose of technical specifications expressed by the Atomic Safety and Licensing Appeal Board in Portland General Electric Company (Trojan Nuclear Plant), ALAB–531, 9 NRC 263 (1979). There, the Appeal Board interpreted technical specifications as being reserved for those conditions or limitations upon reactor operation necessary to obviate the possibility of an abnormal situation or event giving rise to an immediate threat to the public health and safety.

The Commission wishes to emphasize that this rule is intended to be consistent with the language of section 182a. of the Atomic Energy Act, the current § 50.36 rule, and previous interpretations of the regulations. This rule merely clarifies the scope and purpose of technical specifications by identifying criteria which can be used to establish, more clearly, the framework for LCOs in technical specifications.

The Commission believes that amending § 50.36 to include the four criteria contained in the final policy statement will codify a viable, potentially safety-enhancing and cost-saving method for technical specification improvement. The Commission continues to encourage licensees to use the improved STS as the basis for plant-specific technical specifications. As stated in the final policy statement, the Commission will place the highest priority on requests based on the criteria for individual license amendments that are used to evaluate all of the LCOs for an individual plant to determine which LCOs should be included in the technical specifications. Related surveillance requirements and actions would be retained for each LCO that remains in the technical specifications. Each LCO, action, and surveillance requirement should have supporting bases. Such requests would constitute complete conversions to the improved STS.

In addition, the Commission will also entertain requests to adopt portions of the improved STS, even if the licensee does not adopt all STS improvements. These portions will include all related requirements and will be developed as line-item improvements by the NRC staff when they are clearly generic in nature, when there is evidence that a significant number of licensees could benefit from the improvement, and when the industry expresses interest in the improvement. The Commission encourages all licensees who submit technical specification related submittals based on these criteria to emphasize human factors principles to the extent practical consistent with the format and content of their current technical specifications.

LCOs that do not meet any of the criteria, and their associated actions and surveillance requirements, may be proposed for relocation from the technical specifications to licensee-controlled documents, such as the FSAR. The criteria may be applied to either standard or custom technical specifications. The Commission will also consider the criteria in evaluating future generic requirements for inclusion in technical specifications.

The Commission expects that licensees, in preparing their technical specification submittals, will utilize any plant-specific PRA or risk survey and any available literature on risk insights and PRAs. This material should be employed to strengthen the technical bases for those provisions that remain in technical specifications, when applicable, and to indicate whether the provisions to be relocated contain constraints of importance in limiting the likelihood or severity of the accident sequences that are commonly found to dominate risk. Similarly, the NRC staff has and will continue to employ risk insights in evaluating technical specifications submittals.

In addition to the use of PRA in Criterion 4 to determine the scope of technical specifications, PRA has been used as a basis for a number of improvements to the content of technical specifications over the last several years. The NRC staff has approved several relaxations in technical specification allowed outage times and surveillance test intervals which were based on PRA. In addition, the NRC staff used PRA to develop screening criteria to evaluate all of the changes in allowed outage times and surveillance test intervals that were made during the development of the improved STS. The industry and the NRC staff have used PRA to an even greater extent in the development and review of the technical specifications for advanced reactor designs.

The industry and the NRC staff are currently exploring several new approaches to utilizing PRA for technical specification improvements including the use of on-line risk assessment tools. In addition, the industry and the NRC staff are using PRA to explore further improvements in technical specifications by examining the risks during shutdown and during the transition between modes of operation. As a part of this ongoing program of improving technical specifications, the Commission will continue to consider methods to make better use of risk and reliability information for defining future generic technical specification requirements.

During technical specification conversions, the staff will apply the backfit rule (§ 50.109) when adding new requirements from the improved STS to individual plant technical specifications, provided the licensee does not voluntarily accept the new requirements. If, however, the staff suggested additional changes are needed to make the licensee requested changes acceptable from the standpoint of adequate protection or compliance with NRC regulations, § 50.109(a)(2) and § 50.109(a)(3) do not apply and the request may be denied without the additional items.

Summary of Public Comments

The Commission received three letters commenting on the proposed rule. Each letter contained several comments.

One commenter representing the commercial nuclear industry expressed concern that there is insufficient regulatory guidance on how the NRC staff intends to implement this rule with respect to the fourth criterion (§ 50.36(c)(2)(ii)(D)). The commenter believes that this rule should not be modified until the NRC and the industry have reached a common understanding of the application, threshold, and intent of Criterion 4. The commenter stated, ''It is our view, and the Commission apparently recognizes, that this criterion goes beyond the adequate protection standard for public health and safety and license compliance purposes embodied in the first three criteria.''

Similar to this comment on the proposed rule, the Advisory Committee on Reactor Safeguards (ACRS) commented in a June 18, 1993, letter to the Chairman that the NRC staff needs to provide more detailed guidance on the definition of ''significant to public health and safety,'' as it is used in Criterion 4.

Criterion 4 is intended to capture those constraints that probabilistic risk assessment or operating experience show to be significant to public health and safety, consistent with the Commission's PRA Policies. The level of significance either would need to be

such that it justified including the constraints in the technical specifications to ensure adequate protection of the public health and safety or that the addition of such constraints provides substantial additional protection to the public health and safety.

The Commission identified four systems that meet Criterion 4 in the final policy statement based on previous qualitative reviews of operating experience and risk. They are reactor core isolation cooling/isolation condenser, residual heat removal, standby liquid control, and recirculation pump trip. The Commission recognizes, however, that other structures, systems, or components may meet this criterion. Plant- and design-specific PRAs have yielded valuable insight to unique plant vulnerabilities not fully recognized in the safety, design basis accident, or transient analyses.

The NRC's current regulatory requirements are largely based on deterministic engineering criteria involving the use of multiple barriers and defense in depth. Recently, the NRC staff has formulated a comprehensive plan for the application of PRA technology and insights throughout the agency. It is expected that the PRA Implementation Plan will serve as the framework for continued and future applications of PRA at the NRC. Implementation of this plan will increase the systematic use of risk assessment techniques. To ensure consistent and appropriate decision-making that incorporates PRA methods and results, it is important that coherent and clear application guidelines are applied. As part of the PRA Implementation Plan, such guidelines will be established (incorporating safety goals and backfit rule considerations) that address the interdependence of probabilistic risk and deterministic engineering principles. The process of developing these guidelines will involve communications among the NRC staff, the nuclear industry, and the public to ensure that all parties understand the role of PRA methods and results in NRC's risk management efforts. The NRC staff anticipates that, as it gains experience with the development and use of such PRA application guidelines, it will be better able to refine such phrases as ''significant to public health and safety,'' and other phrases that are used in many of the Commission's regulations.

The Commission could delay publication of this final rule until the PRA application guidelines are in place. However, the Commission believes that the experience gained while using the criteria under the interim and final policy statements combined with the limitations imposed on the NRC staff by the backfit rule provide assurance that, in the interim, the staff's use of Criterion 4 to apply PRA to technical specification content will be properly controlled. The Commission has concluded that it is appropriate to publish this final rule, which provides the framework for technical specifications, at this time.

One commenter stated that the PRA portion of the fourth criterion should be clarified to include only those equipment items important to risk-significant sequences as defined in Generic Letter 88–20, ''Individual Plant Examination for Severe Accident Vulnerabilities,'' Appendix 2, and reported in licensees' individual plant examination (IPE) reports.

The IPE program has resulted in commercial reactor licensees using risk-assessment methods to identify plant-specific severe accident vulnerabilities. Since submittal of their IPE reports, many licensees have enhanced their plant-specific PRAs and have gained additional insights into unique plant vulnerabilities. These additional insights from PRAs are being used by licensees in such areas as implementation of the maintenance rule.

As stated in the Commission's ''Proposed Policy Statement on the Use of Probabilistic Risk Assessment Methods in Nuclear Regulatory Activities,'' the use of PRA technology should be increased in all regulatory matters to the extent supported by the state of the art in PRA methods and data and in a manner that complements the NRC's deterministic approach and supports the NRC's traditional defense-in-depth philosophy. The Commission will continue to apply PRA to technical specifications in accordance with its proposed policy statement on the use of PRA. In addition, guidance for specific applications or classes of applications will be developed under the PRA Implementation Plan. The Commission believes this is a more appropriate means to define how Criterion 4 will be used in practice, rather than to limit the structures, systems, and components captured by Criterion 4 to those items important to risk-significant sequences as defined in Generic Letter 88–20, Appendix 2, and reported in licensees' IPE reports. The Commission believes that this process will provide the NRC staff and the industry with additional risk insights, beyond those identified through the IPE program.

The same commenter said that the operating experience portion of the fourth criterion should be deleted because it is subjective and because no equipment would satisfy only that portion of the fourth criterion and none of the other criteria.

While operating experience is an important part of PRA, not all PRA models are sophisticated enough to capture all operating experience. The Commission believes that operating experience can play an important role in determining the safety significance of structures, systems, and components and that there will be no adverse impact by including operating experience as part of Criterion 4.

One commenter emphasized that the development of implementation guidance, especially with respect to Criterion 4, should be consistent with the implementation guidance of the maintenance rule.

As stated previously, the Commission believes that the improved STS, the final policy statement, the backfit rule (§ 50.109), and the statement of consideration for this rule contain sufficient guidance on implementation of the criteria to proceed with rulemaking. Supplementary guidance will continue to be provided to the NRC staff that will support the process for implementing the four criteria on both a generic and plant-specific basis, and will be publicly available. The NRC staff will ensure that any guidance documents that relate to the implementation of the four criteria will be consistent with the implementation guidance of the maintenance rule along with the guidance for other rules promulgated by the Commission.

One commenter expressed a concern with respect to the level of PRA information necessary to support the relocation of existing technical specifications which do not meet the first three criteria.

If a technical specification provision does not meet any of the first three criteria, and if the current PRA knowledge or operating experience does not identify the structure, system, or component as risk significant, the NRC staff will not preclude relocating such technical specifications. The level of PRA information necessary to support relocation would be considered as part of the overall review of the supporting basis for the proposed change. The Commission expects that licensees will utilize PRA insights to indicate whether the provisions to be relocated contain constraints of importance in limiting the likelihood or severity of the accident sequences that are commonly found to dominate risk.

One commenter stated that the implementing guidance needs to be

clear on how the proposed criteria would be used to determine if new requirements are to be incorporated into technical specifications.

The Commission believes that the improved STS, the final policy statement, the backfit rule (§ 50.109), and the statement of consideration for this rule contain sufficient guidance on implementation of the criteria. The staff will also ensure that application of the criteria to new requirements is consistent with the guidance in the draft ''Regulatory Analysis Guidelines,'' Revision 2, published in August 1993 (NUREG/BR–0058), and the final version of Revision 2 when it is approved by the Commission. In addition, the NRC has recently published NUREG/CR–6141, ''Handbook of Methods for Risk-Based Analyses of Technical Specifications,'' December 1994, which summarizes systematic risk-based methods to improve various aspects of technical specification requirements. The handbook was developed through research sponsored by the NRC and will be used as a reference document to assist the NRC staff in reviewing licensees' risk-based analyses submitted as part of the bases for proposed changes in facility technical specifications. This guidance will be updated periodically to incorporate lessons learned and changes in the state of the art, will help ensure the criteria are applied in a consistent and controlled manner, and will be publicly available. As stated above, as part of the PRA Implementation Plan, PRA application guidelines will be established (incorporating safety goals and backfit rule considerations) that address the interdependence of probabilistic risk and deterministic engineering principles. As these application guidelines develop, they will progressively be used to provide guidance to the NRC staff on the use of the criteria contained in this rule and the application of the backfit rule to new regulatory requirements.

One commenter stated that the same or similar criteria to those in the rule should also be applied to 10 CFR 50.36(c)(3), (4), and (5), so that surveillance requirements, design features, and administrative controls which do not provide the necessary ''adequate protection of the health and safety of the public'' can be relocated to other licensee-controlled documents.

With respect to § 50.36 (c)(3), ''Surveillance Requirements,'' the Commission stated in the final policy statement that appropriate surveillance requirements and actions should be retained for each LCO which remains or is included in the technical specifications.

The criteria in § 50.36(c)(2) apply to safety functions. Therefore, the Commission does not believe that these criteria can be appropriately applied to the types of requirements found in the ''design features'' and ''administrative controls'' sections of the technical specifications. The NRC staff has, however, been pursuing separate improvements to these requirements, in cooperation with industry, using the intent of the criteria to identify the optimum set of requirements in each of these areas and to eliminate redundancy to other regulations consistent with the minimum requirements of § 50.36 and the Atomic Energy Act, as amended.

One commenter stated that the removal of items from plant technical specifications may decrease enforceability and licensee attention to safety.

The Commission does not agree that the removal of items from plant technical specifications will decrease licensee attention to safety. On the contrary, the Commission believes that implementation of the criteria contained in this rule will produce an improvement in the safety of nuclear power plants through the use of more operator-oriented technical specifications, improved technical specification bases, reduced action statement induced plant transients, and more efficient use of NRC and industry resources. Clarification of the scope and purpose of technical specifications has provided useful guidance to both the NRC and industry and has resulted in improved technical specifications that are intended to focus licensee and plant operator attention on those plant conditions most important to safety.

The Commission also does not agree that the removal of items from plant technical specifications will have any adverse impact on the NRC's ability to take enforcement action on safety-significant issues. The improved STS are intended specifically to focus on the operating plant parameters and associated surveillance criteria of safety significance. The Commission requires compliance with technical specifications, and expects adherence to commitments contained in licensee-controlled documents. Violations and deviations will, as in the past, be handled in accordance with the NRC enforcement policy in 10 CFR Part 2, Appendix C. Any changes to a licensee's technical specifications to apply these criteria will be made by the license amendment process prior to implementation.

When a licensee elects to apply these criteria, some requirements are relocated from technical specifications to the FSAR or to other licensee-controlled documents. Licensees are to operate their facilities in conformance with the descriptions of their facilities and procedures in their FSAR. Changes to the facility or to procedures described in the FSAR are to be made in accordance with 10 CFR 50.59. The Commission will take appropriate enforcement action to ensure that licensees comply with 10 CFR 50.59. Changes made in accordance with the provisions of other licensee-controlled documents (e.g., QA plan, security plan) are subject to the specific requirements for those documents. Nothing in this rule limits the authority of the NRC to conduct necessary inspections and to take appropriate enforcement action when regulatory requirements or commitments are not met.

The same commenter stated that the removal of items from plant technical specifications will diminish public participation rights in the regulation of operating nuclear power plants by diminishing the universe of potential operating license amendment cases.

Any changes to a licensee's technical specifications to apply these criteria will be made by the license amendment process before implementation. The review of each license amendment will involve an opportunity for public participation. One of the goals of the technical specifications improvement program was to make more efficient use of NRC and industry resources by focusing attention on those plant conditions most important to safety and, in turn, reducing the number of license amendment requests. Since 1969, there has been a trend toward including in technical specifications not only those requirements derived from the analyses and evaluations included in the safety analysis report but also essentially all other Commission requirements governing the operation of nuclear power reactors. This extensive use of technical specifications is due in part to a lack of well-defined criteria (in either the body of the rule or in some other regulatory document) for what should be included in technical specifications. This has contributed to the volume of technical specifications and to the several-fold increase, since 1969, in the number of license amendment applications to effect changes to the technical specifications. It has diverted both NRC staff and licensee attention from the more important requirements in these documents to the extent that it has resulted in an adverse but unquantifiable impact on safety.

The commenter found it curious that an industry and an agency that claim to be able to quantify the risks of nuclear power are unable to quantify this impact on safety, and stated, ''Perhaps if it is unquantifiable, the alleged adverse impact does not really exist.''

The Commission agrees that there are limitations and uncertainties in the ability to quantify the impact on safety described above. Uncertainties exist in any regulatory approach and these uncertainties are derived from knowledge limitations. A probabilistic approach has exposed some of these limitations and yielded an improved framework to better focus and assess their significance and assist in developing a strategy to accommodate them in the regulatory process. The Commission does not intend, however, to let these limitations prevent it from taking steps to improve the regulations in a manner that will have substantial safety benefits. The Commission believes the public will be better served by focusing both NRC and industry attention on the most safety-significant items.

The NRC staff has made three changes to this rule since it was published in its proposed form. The first change was made in order to maintain consistency with other NRC staff and Commission documents that have been issued since this rule was published in its proposed form. In § 50.36(c)(2)(ii)(D), the term ''probabilistic safety assessment'' has been changed to ''probabilistic risk assessment.''

The second and third changes are in § 50.36(c)(2)(iii). The beginning of the first sentence was changed to read, ''A licensee is not required to *propose* to modify technical specifications * * *'' rather than ''A licensee is not required to modify technical specifications * * *'' This change was made to clarify that a licensee would be required to modify their technical specifications if the Commission determined that a new requirement was necessary in accordance with the backfit rule and the new requirement met one of the four criteria contained in § 50.36(c)(2)(ii).

The third change is the deletion of the last sentence in § 50.36(c)(2)(iii). The sentence read, ''However, for technical specification amendments a licensee proposes after August 18, 1995, the criteria in paragraph (c)(2)(ii) of this section provide an acceptable scope for limiting conditions for operation.'' This sentence was deleted because it did not add or modify any requirements and the thought is adequately expressed in this statement of consideration.

Finding of No Significant Environmental Impact: Availability

The Commission has determined under the National Environmental Policy Act of 1969, as amended, and the Commission regulations in Subpart A of Part 51, that this final rule is not a major Federal action significantly affecting the quality of the human environment and will not degrade the environment in any way. Therefore, the Commission concludes that there will be no significant impact on the environment from this rule. This discussion constitutes the environmental assessment and finding of no significant impact for this rule; a separate assessment has not been prepared.

Paperwork Reduction Act Statement

This final rule does not contain a new or amended information collection requirement subject to the Paperwork Reduction Act of 1980 (44 U.S.C. 3501 et seq.). Existing requirements were approved by the Office of Management and Budget, approval number 3150–0011.

Regulatory Analysis

The Commission has determined that a regulatory analysis is not required for this rule. The Commission believes that the intent of the regulatory analysis has been met through the extensive consideration given to the development of the ''Final Policy Statement on Technical Specifications Improvements for Nuclear Power Reactors'' and the improved STS, both of which gave the public an opportunity for comment. In addition, the determination that no regulatory analysis is necessary was noted in the **Federal Register** Notice for the proposed rule, and the NRC received no comments on this issue.

The criteria being added to § 50.36 are the same as those contained in the final policy statement and have been used by the NRC and the nuclear power industry to define the content of technical specifications since September 1992. The rule does not impose any requirements but, rather, allows nuclear power reactor licensees to voluntarily use the criteria to relocate existing technical specifications that do not meet any of the criteria to licensee-controlled documents. The NRC staff also uses these criteria to determine whether technical specifications are appropriate to provide regulatory control over new requirements or positions that have been justified consistent with the backfit rule.

The Commission considered the need for and consequences of this action when it made the decision not only to publish the criteria in the final policy statement but also to codify the criteria through rulemaking. Appropriate alternative approaches to this action have been identified and analyzed over the life of the Technical Specifications Improvement Program, beginning with an earlier attempt to define the content of technical specifications through rulemaking. As described in the background discussion, the Commission published a proposed amendment to § 50.36 (47 FR 13369) on March 30, 1982. However, because of difficulties with defining criteria for technical specifications and because of other higher priority licensing work, the rule change was deferred. In February 1987, the Commission published an ''Interim Policy Statement on Technical Specification Improvements for Nuclear Power Reactors,'' and in July 1993, published the final policy statement. During its review of the final policy statement, the Commission concluded that the four criteria should be codified in a rule. Thus, alternative approaches to regulatory objectives have been identified and analyzed, and the Commission has decided that there is no preferable alternative to codifying the four criteria in a rule. With regard to evaluation of values and impacts of alternatives, the Commission believes there is no difference in the values or impacts of applying the criteria under the final policy statement or through a rule, except that the criteria are more readily available to future users in a rule rather than in a policy statement.

Regulatory Flexibility Certification

In accordance with the Regulatory Flexibility Act of 1980 (5 U.S.C. 605(b)), the Commission certifies that this final rule does not have a significant economic impact on a substantial number of small entities. This rule affects only the licensing and operation of nuclear power plants. The companies that own these plants do not fall within the scope of the definition of ''small entities'' as given in the Regulatory Flexibility Act or the Small Business Size Standards in regulations issued by the Small Business Administration at 13 CFR part 121.

Backfit Analysis

The NRC has determined that the backfit rule, § 50.109, does not apply to this final rule and, therefore, a backfit analysis is not required for this final rule because these amendments do not involve any provisions that would impose backfits as defined in § 50.109(a)(1).

List of Subjects in 10 CFR Part 50

Antitrust, Classified information, Criminal penalties, Fire protection, Intergovernmental relations, Nuclear power plants and reactors, Radiation protection, Reactor siting criteria, Reporting and recordkeeping requirements.

For the reasons given in the preamble and under the authority of the Atomic Energy Act of 1954, as amended, the Energy Reorganization Act of 1974, as amended, and 5 U.S.C. 552 and 553, the NRC is adopting the following amendment to Part 50.

PART 50—DOMESTIC LICENSING OF PRODUCTION AND UTILIZATION FACILITIES

1. The authority citation for Part 50 continues to read as follows:

Authority: Secs. 102, 103, 104, 105, 161, 182, 183, 186, 189, 68 Stat. 936, 937, 938, 948, 953, 954, 955, 956, as amended, sec. 234, 83 Stat. 1244, as amended (42 U.S.C. 2132, 2133, 2134, 2135, 2201, 2232, 2233, 2236, 2239, 2282); secs. 201, as amended, 202, 206, 88 Stat. 1242, as amended, 1244, 1246 (42 U.S.C. 5841, 5842, 5846).

Section 50.7 also issued under Pub. L. 95–601, sec. 10, 92 Stat. 2951 (42 U.S.C. 5851). Section 50.10 also issued under secs. 101, 185, 68 Stat. 955, as amended (42 U.S.C. 2131, 2235); sec. 102, Pub. L. 91–190, 83 Stat. 853 (42 U.S.C. 4332). Sections 50.13, 50.54(dd), and 50.103 also issued under sec. 108, 68 Stat. 939, as amended (42 U.S.C. 2138). Sections 50.23. 50.35, 50.55, and 50.56 also issued under sec. 185, 68 Stat. 955 (42 U.S.C. 2235). Sections 50.33a, 50.55a and Appendix Q also issued under sec. 102, Pub. L. 91–190, 83 Stat. 853 (42 U.S.C. 4332). Sections 50.34 and 50.54 also issued under sec. 204, 88 Stat. 1245 (42 U.S.C. 5844). Sections 50.58–50.91, and 50.92 also issued under Pub. L. 97–415, 96 Stat. 2073 (42 U.S.C. 2239). Section 50.78 also issued under sec. 122, 68 Stat. 939 (42 U.S.C. 2152). Sections 50.80–50.81 also issued under sec. 184, 68 Stat. 954, as amended (42 U.S.C. 2234). Appendix F also issued under sec. 187, 68 Stat. 955 (42 U.S.C. 2237).

2. In § 50.36, paragraphs (c)(2) and (3) are revised to read as follows:

§ 50.36 Technical specifications.

* * * * *

(c) * * *

(2) *Limiting conditions for operation.* (i) Limiting conditions for operation are the lowest functional capability or performance levels of equipment required for safe operation of the facility. When a limiting condition for operation of a nuclear reactor is not met, the licensee shall shut down the reactor or follow any remedial action permitted by the technical specifications until the condition can be met. When a limiting condition for operation of any process step in the system of a fuel reprocessing plant is not met, the licensee shall shut down that part of the operation or follow any remedial action permitted by the technical specifications until the condition can be met. In the case of a nuclear reactor not licensed under § 50.21(b) or § 50.22 of this part or fuel reprocessing plant, the licensee shall notify the Commission, review the matter, and record the results of the review, including the cause of the condition and the basis for corrective action taken to preclude recurrence. The licensee shall retain the record of the results of each review until the Commission terminates the license for the nuclear reactor or the fuel reprocessing plant. In the case of nuclear power reactors licensed under § 50.21(b) or § 50.22, the licensee shall notify the Commission if required by § 50.72 and shall submit a Licensee Event Report to the Commission as required by § 50.73. In this case, licensees shall retain records associated with preparation of a Licensee Event Report for a period of three years following issuance of the report. For events which do not require a Licensee Event Report, the licensee shall retain each record as required by the technical specifications.

(ii) A technical specification limiting condition for operation of a nuclear reactor must be established for each item meeting one or more of the following criteria:

(A) *Criterion 1.* Installed instrumentation that is used to detect, and indicate in the control room, a significant abnormal degradation of the reactor coolant pressure boundary.

(B) *Criterion 2.* A process variable, design feature, or operating restriction that is an initial condition of a design basis accident or transient analysis that either assumes the failure of or presents a challenge to the integrity of a fission product barrier.

(C) *Criterion 3.* A structure, system, or component that is part of the primary success path and which functions or actuates to mitigate a design basis accident or transient that either assumes the failure of or presents a challenge to the integrity of a fission product barrier.

(D) *Criterion 4.* A structure, system, or component which operating experience or probabilistic risk assessment has shown to be significant to public health and safety.

(iii) A licensee is not required to propose to modify technical specifications that are included in any license issued before August 18, 1995, to satisfy the criteria in paragraph (c)(2)(ii) of this section.

(3) *Surveillance requirements.* Surveillance requirements are requirements relating to test, calibration, or inspection to assure that the necessary quality of systems and components is maintained, that facility operation will be within safety limits, and that the limiting conditions for operation will be met.

* * * * *

Dated at Rockville, Maryland, this 13th day of July 1995.

For the Nuclear Regulatory Commission.

John C. Hoyle,

Secretary of the Commission

[FR Doc. 95–17723 Filed 7–18–95; 8:45 am]

BILLING CODE 7590–01–P

DEPARTMENT OF ENERGY

Office of Energy Efficiency and Renewable Energy

10 CFR Part 451

[Docket No. EE–RM–94–301]

Renewable Energy Production Incentives

AGENCY: Office of Energy Efficiency and Renewable Energy, Department of Energy.

ACTION: Final rulemaking.

SUMMARY: The Department of Energy (DOE) Office of Energy Efficiency and Renewable Energy (EE) is today issuing a final rule to implement a renewable energy production incentive program in response to the requirements of section 1212 of the Energy Policy Act of 1992. This program provides for incentive payments to owners or operators of qualified renewable energy facilities, subject to the availability of appropriations. This rule contains procedures for application, qualification requirements, procedures for calculation of incentive payments, and administrative remedies.

DATES: *Effective Date:* This regulation is effective August 18, 1995.

Application Date: Applications for incentive payments for energy produced in fiscal year 1994 shall be due September 5, 1995.

FOR FURTHER INFORMATION CONTACT:

Kurt Klunder, U.S. Department of Energy, Office of Energy Efficiency and Renewable Energy, Forrestal Building, Mail Station EE–10, 1000 Independence Avenue, SW, Washington, DC, 20585, (202) 586–4564.

Michael W. Bowers, Esq., U.S. Department of Energy, Office of General Counsel, Forrestal Building,

Mail Station GC–72, 1000 Independence Avenue, SW, Washington, DC 20585, (202) 586–9507.

SUPPLEMENTARY INFORMATION:

I. Introduction

On May 13, 1994, DOE issued a Notice of Proposed Rulemaking for the Renewable Energy Production Incentive program. (59 FR 24982). The goal of the incentive program is to advance the commercialization and use of renewable energy electric generation systems in the United States.

The stated purposes of title XII of the Energy Policy Act of 1992, of which section 1212 is part, are promotion of (1) increases in the production and utilization of energy from renewable energy sources; (2) further advances of renewable energy technologies; and (3) exports of United States renewable energy technologies.

The implementation of section 1212 draws upon relevant attributes of sections 1914 and 1916 of the Energy Policy Act of 1992. Section 1914 amended the Internal Revenue Code to provide a tax credit of 1.5 cents per kilowatt-hour, adjusted for inflation, for electricity generated from wind or from biomass derived from organic matter grown exclusively for use in generating electricity. 26 U.S.C. § 45. Section 1916 amended the Internal Revenue Code to make permanent the energy investment tax credit for non-utility investors in solar and geothermal property. 26 U.S.C. § 48(a)(2). Sections 1914 and 1916 were designed to assist in making certain emerging renewable energy technologies cost competitive. The program authorized by section 1212 provides State instrumentalities and nonprofit electric cooperatives incentives for the production of electricity using certain renewable resources in a manner that complements the incentives offered to taxable entities under sections 1914 and 1916 of the Energy Policy Act.

In response to the Notice of Proposed Rulemaking, DOE received written input from 52 commenters and heard testimony from seven organizational representatives at a public hearing held on June 16, 1994 in Washington, D.C. After considering the comments received on the proposed rule, a number of changes have been made to the final rule contained herein.

With the issuance of this final rule, DOE amends title 10, Chapter II of the code of Federal Regulations to establish a renewable energy production incentive program pursuant to section 1212 of the Energy Policy Act of 1992. 42 U.S.C. § 13317.

II. Discussion of Comments

Section 451.1 Purpose and Scope

DOE proposed that renewable energy production incentive payments be made only for the generation of electric forms of energy. Three commenters suggested that such payments be extended to the production of non-electric forms of energy. Section 1212 of the Energy Policy Act specifies that payments are to be made only for ''electric energy generated and sold,'' and thus provides no authority to expand incentive payments to include non-electric forms of energy.

Section 451.2 Definitions

DOE proposed defining closed-loop biomass as plant matter, other than standing timber, grown for the sole purpose of being used to generated electricity. Several comments were received on this proposed definition. Some commenters wanted to modify the definition to include dedicated tree farms planted prior to October 1, 1993, while others wanted to include secondary uses of plant crops. DOE has responded to these comments in part by designating as closed-loop biomass all harvests, after the first harvest, of fast growing trees planted before October 1, 1993 if such harvests occur during the qualifying period. DOE made additional changes in the definition to make it consistent with the definition of closed-loop biomass contained in section 1914 of the Energy Policy Act. The suggested secondary use of plant matter is not considered closed-loop biomass since such use would be inconsistent with the section 1914 statutory definition.

In response to several comments requesting clarification as to what portion of electric energy generated is eligible for incentive payments, DOE added the term and definition for ''net electric energy generated'' in the final rule. DOE is adding this definition to draw a distinction between total electricity generated and the actual amount of electricity sold after deducting the electric energy used internally by the facility to operate the pumps, motors, controls, lighting, heating and cooling, and other systems needed to keep the facility operational. Such parasitic energy does not qualify for incentive payments. The addition of the term ''net electric energy generated'' is intended to clarify this point.

DOE proposed defining ''nonprofit electrical cooperatives'' as a cooperative association that is treated as tax exempt under section 501(c)(12) of the Internal Revenue Code and is organized under the laws of any State for the purpose of providing electric service to its members and other customers. DOE received several comments from cooperatives indicating that some cooperatives, while not organized to earn profit, are not treated as tax-exempt under section 501(c)(12). These cooperatives do incur tax liability from time to time, but within narrow limits that would not enable the organizations to benefit from incentives through tax credits. In consideration of these comments and absent legislative history to the contrary, DOE has changed the definition of nonprofit electrical cooperative to include those operated on a not-for-profit basis. To eliminate the possibility of double coverage, such entities are requires to certify as part of the application under section 451.8 that they will not claim tax credits for electricity produced during the same fiscal year for which incentive payments are requested.

DOE proposed defining ''renewable energy facility'' in sufficiently broad terms to include the designated technologies while retaining consistency with the language in section 1212 of the Energy Policy Act. A key part of the definition referenced ''a system or integrated set of components.'' Three commenters requested that the definition be modified to clarify the minimum facility that constitutes a renewable energy facility. In response to this request, DOE has revised the definition in the final rule to clarify that a single module or unit, such as, a wind turbine together with its tower and supporting pad, or an aggregation of such units falls within the definition of a ''renewable energy facility.''

Several commenters sought to expand the definition of ''renewable energy facility'' to include facilities that burn municipal solid waste. DOE is precluded from including municipal solid waste in the final rule because the language of the statute specifically excludes ''municipal solid waste which is burned'' to create heat. 42 U.S.C. § 13317(b)(1). Five commenters suggested that methane from sewage treatment and anaerobic digestion facilities and hydrogen derived from biomass sources should be clearly recognized as qualified renewable energy sources when used to generate electricity. DOE concurs that these sources are biomass energy sources.

Renewable energy facilities may include: (1) Solar photovoltaic systems, which convert solar light to direct current electricity; (2) solar thermal systems, which use a fluid heated by the sun to directly or indirectly drive an electric generator; (3) wind conversion systems, which capture wind energy to

drive an electric generator; (4) biomass energy systems, which generate electricity using heat derived from combustion of plant matter, or from combustion of gases or liquids derived from plant matter, animal waste, or sewage, or from combustion of gases derived from landfills, or which derive hydrogen from these same sources to generate electricity using fuel cells; and (5) geothermal systems, which generate electricity using naturally-occurring underground heat.

Several editorial changes have been made to § 451.2. First, the illustrative list of renewable energy facilities has been deleted to avoid confusion. Second, the list of excluded renewable energy sources has been incorporated in the definition of ''renewable energy source.''

Section 451.4 What is a Qualified Renewable Energy Facility

DOE proposed, consistent with the provisions in section 1212, a list characterizing the attributes of a qualified renewable energy facility, and sought in proposed paragraph (b) to clarify a potential ambiguity with regard to what constitutes ownership. Recognizing that State laws vary in assignment of ownership of financed capital facilities, DOE proposed wording the ownership requirements to cover situations in which a State, political subdivision, or a cooperative has all rights to the beneficial use of the qualified renewable energy facility, but legal title under State law is held by a source that provided secured financing for the benefit of the State, political subdivision, or cooperative.

A number of comments were received on ownership issues. Some of the commenters wanted the Department to extend the ownership criteria to include joint action agencies. Joint action agencies are State-sanctioned organizations of public power electric utilities established to achieve economies of scale in equipment and power purchases or to jointly provide other utility services. These agencies are normally owned by their member utilities, but commenters have indicated that in some cases actual legal ownership of the joint agency may be unclear under State law. Accordingly, any joint action agency is considered to qualify under the ownership requirement if each member meets the classification requirement as an entity designated under the § 451.4(a) provision.

One commenter also requested that DOE clarify whether public school districts are deemed political subdivisions of a State. DOE recognizes the broad umbrella of the term ''political subdivision of a State.'' Generally, public school districts fall within the § 451.4(a) classification.

DOE proposed paragraph (c) regarding sale of electricity to track the language of section 1212. In the preamble of the proposed rule, DOE discussed its interpretation of the word ''sale'' as used in the phrase ''for sale in, or affecting, interstate commerce.'' Sale was interpreted to mean a transaction between two entities, who may be related, involving the sale of electric energy at fair market value. Based on this interpretation, electricity generated for use within the renewable energy facility would not constitute a sale. Twelve commenters requested further clarification of the requirement for such sale ''in or affecting interstate commerce.'' Specifically, they asked DOE to elaborate on the meaning of ''interstate commerce.'' Recognizing that activities within a State can affect interstate commerce, DOE has concluded that the statutory requirement concerning effect on interstate commerce is satisfied when electricity is sold to another party for consideration and has revised § 451.4(c) accordingly. DOE has also incorporated the use of the new term ''net electric energy generated,'' discussed under § 451.2 of this section of the preamble, to clarify that parasitic energy is not eligible for incentive payments.

Proposed paragraph (e) listed excluded renewable energy sources. In the case of excluded geothermal energy, certain characteristics of the reservoir were specified that included the phrase ''steam quality of 95 percent water or higher.'' Even though the Department did not receive any comments on this provision, clarifying language has been added in the final rule interpreting the meaning of this specification. The Department has interpreted the phrase ''a stream quality of 95 percent water or higher'' to mean a fluid composed of at least 95 percent water vapor. These exclusions have been moved to the definition of ''renewable energy source'' in section 451.2, of this final rule.

Proposed paragraph (f) tracked the language of section 1212 which requires that qualifying renewable energy facilities must first be used during the period beginning October 1, 1993, and ending on September 30, 2003. Several commenters requested that the Department clarify the term ''first used'' for facilities that have been converted to renewable energy. In response to these comments, the Department has inserted the term ''newly constructed'' in paragraph (e) to distinguish between facilities which are newly constructed and those existing facilities which are converted. A new paragraph (f) has been added that elaborates on the criteria that conversions of existing facilities must meet to quality for incentive payments. There are two possibilities for conversion. The first is based on converting an existing renewable energy facility. In consideration of the comments to address the eligibility of converting existing renewable energy facilities, DOE reviewed an IRS revenue ruling that specifies the qualifications of an eligible facility that contains some used property. The IRS ruled that such a facility would qualify for tax credit provided the fair market value of the used property is not more than 20 percent of the eligible facility's total value (i.e., the cost of the new property plus the value of the used property). Rev. Rul. 94–31, I.R. B. 1994–21,4. By revising proposed paragraph (f) (renumbered in this final rule as paragraph (e)), and adding paragraph (f), DOE has adopted this criterion in the final rule. Accordingly, a renewable energy facility that is refurbished such that the fair market value of any used property does not exceed 20% of the facility's total value and meets the other criteria specified in this part would be eligible for an incentive payment. Paragraph (f)(2) specifies eligibility when converting an existing non-renewable facility. The facility must be converted in part or in whole to a renewable facility and placed in use within the specified time period.

Section 451.5 Where and When to Apply

DOE proposed in paragraph (a) that owners or operators of qualified renewable energy facilities file applications only in response to an annual notice in the Federal Register. There was little comment on this proposal, but the tenor of other comments favored simplification of the application process. Consequently, DOE is eliminating the annual Federal Register notice and establishing a standard application period. In the final rule, DOE is requiring that owners or operators of qualified renewable energy facilities apply during the period beginning October 1 and ending December 31 of each year (except for fiscal year 1994) for an incentive payment for electricity generated and sold in the preceding fiscal year. Under paragraph (b)(2), applications for energy generated in fiscal year 1994 shall be due 45 days after the date of this rule. The extension of the application period for FY 1994 incentive payments was provided because the standard application period passed prior to the

publication of this rule. For clarification purposes, paragraph (b)(3) provides that if an applicant fails to file an application for payment for electric energy generated in any fiscal year, energy generated in that year cannot be subsequently claimed as eligible for an incentive payment.

Seventeen commenters requested that DOE provide a prequalification mechanism in the application process to reduce payment uncertainty. While DOE cannot guarantee an incentive payment, it is adding a provision, subparagraph (a)(1), for applicants to obtain a preliminary and conditional determination of eligibility for incentive payment. In addition, to assist the Department in preparing its annual budget requests, DOE is adding a provision, subparagraph (a)(2), requesting that the owner or operator of a qualifying renewable energy facility provide notification at least 6 months in advance of when the facility is first expected to be placed into service.

Section 451.6 Duration of Incentive Payments

A statement has been added to this section in the final rule to give notice of the sunset provision of Section 1212(f) of the statute.

Section 451.8 Application Content Requirements

DOE proposed in paragraph (f) that domestic components and equipment represent at least 50% of the capital cost of the qualified energy facility. Five commenters requested that the domestic content provision either be lowered or eliminated. In consideration of these comments and in recognition of U.S. international trade policies and tariff and trade agreements, DOE eliminated this proposed requirement.

DOE proposed in paragraphs (g) and (h) a requirement for an independently audited and certified statement of the annual and monthly metered number of kilowatt-hours generated and sold. Six commenters expressed concern about the cost and time requirements of this proposal. In response to these concerns, the Department is removing the ''independently audited'' provision, as well as the terms ''certified statement'' and ''class of customer.'' The Department is instead requiring that an authorized executive official of the applicant organization sign the application for the incentive payment which is to include a statement attesting to the accuracy of the information upon which the requested payment is based. A commenter proposed adding a statement in the rule regarding the consequences of falsifying parts of the application. DOE elected not to include a penalties provision because of the many remedies that are available for the falsification of an incentive payment application. For example, 18 U.S.C. § 1001 provides for criminal penalties where an applicant knowingly and willfully falsifies statements or makes fraudulent statements or representations. Also, DOE may under certain circumstances conduct an audit or require an independent audit as provided in § 451.9.

DOE proposed using kilowatt-hours as the unit of measurement for electric energy generated and sold, cents per kilowatt-hour as the unit of measurement for the amount of the incentive payment, the British thermal unit as the unit of measurement for heat, and British thermal units per pound as the measure for enthalpy. DOE received one comment which requested that DOE amend the proposed rule to comply with public laws and Executive Order 12770 directing preferential use of the International Systems of Units (SI). The commenter recommend the use of joules, cents per megajoule, and joules per kilogram as the units of measure in this rule. In response the Department revised all sections referring to British thermal units or British thermal units per pound by substituting joules or joules per kilogram as the primary text and including the English unit equivalent parenthetically. The principal text now conforms to SI standards for heat energy while the parenthetic citation allows direct comparison with legislative sources in those instances where the original legislation contains English unit citations. Where 2 heat measurements are required to calculate a dimensionless ratio or fraction, the rule does not specify the measuring units except to state that both measurements must be made in the same units. In the case of electric power and energy, DOE recognizes that the SI unit for energy is the joule; however, a joule per second is a watt and both watt and watt-hour (and kilowatt-hour) are considered derivatives of SI units and their use is considered to conform to the intent of Executive Order 12770. DOE has continued to use watt and watt-hour since the required electrical measurements will be made using these units and their non-use promotes increased opportunities for error on the part of the personnel involved in electric energy measurement, recording, compilation, and summation, and in application preparation.

DOE is adding a provision, § 451.8(i), to clarify that the total electrical energy claimed as eligible for incentive payments is the sum of net electric energy newly generated and accrued energy. Note that accrued energy is eligible for reimbursement at the same payment rate as the newly generated net electric energy.

DOE proposed that applicants provide wire transfer payment instructions. One commenter requested that this provision be broadened to include ''other payment instructions.'' DOE has incorporated this suggestion in this provision. To reflect the changes and modifications made to this section, some paragraph designations under this section have been changed.

Section 451.9 Procedures for Processing Applications

In order to meet its responsibility to ensure the accuracy of the metered energy claimed for incentive payments under this rule, DOE is reserving the right to require an independent audit, the cost of which is to be paid for by the applicant. This is in addition to any audit DOE may perform.

DOE has simplified the payment calculations proposed in paragraph (e), (redesignated in the final rule as paragraph (d)), to assist qualified renewable energy facilities in the application process. Paragraph (d) of the final rule provides that incentive payments under this part are determined by multiplying the number of kilowatt-hours calculated under § 451.9(c)(2) by 1.5 cents per kilowatt-hours, adjusted for inflation.

DOE proposed under paragraph (g), (redesignated in the final rule as paragraph (e)), a procedure to deal with the possibility that there could be insufficient appropriations to make the full incentive payments. In the event that the funds available to be obligated under this program are less than the amount required to make full payments to all qualifed applicants, the proposed procedure provided payment first (and, if necessary, pro rata payment) to all owners and operators of solar, wind, geothermal, and closed-loop biomass facilities, and payment second (and, if necessary, pro rata payment) to owners and operators of all other qualified facilities. DOE received both comments favoring retention of this priority payout approach and comments suggesting elimination of this approach. Those favoring its retention cited the limited market penetration of many of the technologies designated for priority payment. They also cited the preferential treatment accorded emerging rather than commercial renewable technologies in other portions of the Energy Policy Act and asserted that the legislation's authors

did not intend payments for technologies already on sound commercial footing. Comments suggesting elimination of this priority payment system cited diminished opportunities to encourage investment by the large number of utilities considering facilities based on second priority payment technologies. They also stated that the priority payment system reduces incentives for recovering value from otherwise non-revenue generating waste management facilities and for achieving climate change benefits through conversion to energy production of methane emitting landfills and agricultural waste sites. After carefully considering all comments, DOE elected to retain the priority payment system as originally proposed. In reaching this position, DOE was influenced by four considerations: (1) a major objective of the program is to assist commercialization of emerging renewable technologies; (2) with equal priorities for all technologies, the incentive value of the program for solar, wind, geothermal, and closed-looped biomass technologies is reduced due to uncertainty regarding the adequacy of annual funding to make full payment to all recipients; (3) the establishment of a priority payment category increases the incentive for investment in the priority technologies since the probability of adequate annual funding for payment to that category is higher; and (4) the establishment of a set of preferred renewable technologies that are consistent with those identified in the tax incentive sections 1914 and 1916 of the Energy Policy Act results in closer comparability of renewable energy incentives available to tax and non-tax paying entities.

Several commenters provided suggestions regarding payout procedures, including: (a) using available funds to establish an escrow account to cover 10-year payment to owners or operators to early on-line qualified facilities based on facility start-up date; and (b) establishment of a 10-year escrow system based on the date applications are received. Both of these approaches have the potential for providing full payout to a limited number of program participants, but they also result in a larger number of participants receiving no payments. In addition, they do not increase the incentive value of the program since the certainty of receiving payments would be known only after the facility became operational. For the foregoing reasons, DOE did not adopt these proposals in the final rule.

Several of the commenters who recommended a 10-year escrow account argued that potential investors in new renewable energy facilities are unlikely to take account of payments under this program in assessing an investment without assurances, at the time of investment, that the full schedule of payments would be made. DOE believes this argument has merit. However, additional work by DOE and its stakeholders is needed to develop a payout approach that will maximize the effectiveness of the program as an incentive for promoting incremental investment in new renewable energy facilities. DOE intends to publish a notice in the near future that invites suggestions from interested persons regarding possible program modifications, including possible statutory or regulatory changes, that can increase the incentive value of this effort.

Other Comments

In the preamble of the proposed rule, DOE stated that it had considered the inclusion of a requirement that to be considered qualified for receipt of incentive payments, a facility must be purchased and installed without assistance from other Federal programs. In consideration of the comments received and the absence of this restriction in this legislation, DOE did not include such a requirement in the final rule.

III. Regulatory Review

DOE, in consultation with the Office of Management and Budget (OMB) has concluded that this is not a significant regulatory action because it does not meet the criteria which define such actions under Executive Order 12866, 58 FR 51735, and is therefore exempt from regulatory review. Accordingly, no clearance of this rule under the provisions of Executive Order 12866 is required.

IV. Review Under Executive Order 12778

Section 2 of Executive Order 12778 instructs each agency to adhere to certain requirements in promulgating new regulations. These requirements, set forth in sections 2(a) and (b)(2), include eliminating drafting errors and needless ambiguity, drafting the regulation to minimize litigation, providing clear and certain legal standards for affected legal conduct, and promoting simplification and burden reduction. Agencies are also instructed to make every reasonable effort to ensure that the regulation describes any administrative proceeding to be available prior to judicial review and any provisions for the exhaustion of administrative remedies. DOE certifies that this rule meets the requirements of section 2 (a) and (b) of Executive Order 12778.

V. Review Under Executive Order 12612

Executive Order 12612, 52 FR 41685 (October 30, 1987), requires that regulations, rules, legislation, and any other policy actions be reviewed for any substantial direct effects on States, on the relationship between the national Government and the States, or on the distribution of power among various levels of Government. If there are sufficient substantial direct effects, then the Executive Order requires preparation of a federalism assessment to be used in all decisions involved in promulgating or implementing a policy action. This rule, which provides financial incentives to States and others, will not have a substantial direct adverse effect on the institutional interests or traditional functions of States.

VI. Review Under the Regulatory Flexibility Act

DOE published a determination in the Notice of Proposed Rulemaking (59 FR 24982, May 13, 1994) that the proposed rule will not have a significant impact on small entities. One comment was received addressing this determination. The Small Business Administration (SBA) stated that DOE's certification was incorrect because municipalities with a population of less than 50,000 are classified as small organizations under the Regulatory Flexibility Act and the Small Business Administration size standard for an electric utility is the disposition of four million megawatt-hours per year. DOE agrees with the SBA characterization of such entities. It is the Department's view that no regulatory flexibility analysis is warranted because there is no reason to conclude that the regulations will have a significant adverse economic impact. The commenter did not identify any such impacts, and DOE understands that the renewable energy production incentive is only one of many factors in determining whether a qualified facility is to be constructed.

The SBA requested that DOE examine alternatives that would widen the availability of the production incentives through revising the two-tier allocation process and by treating all biomass technologies equally when there are insufficient appropriations to fund each eligible project. DOE acknowledges that small municipalities may have

opportunities to develop biomass projects which are not closed-loop, but DOE has chosen to retain the two-tier approach for reasons addressed in the discussion of section 451.9 in the Preamble. We note that the two-tier system does not impose regulatory burdens on any party, but merely allocates benefits in the circumstance of insufficient appropriations. In enacting the Regulatory Flexibility Act, Congress was primarily concerned with the high cost of compliance with regulations of general and uniform applicability which place disproportionate burdens upon small businesses bound to conform their conduct to those regulations. See S. Rep. No. 878, 96th Cong., 2d Sess. 3, 6–7, reprinted in 1980 U.S. Code Cong. & Ad. News 2788, 2790, 2793–2794. Those concerns do not apply to this rule.

VII. Review Under the Paperwork Reduction Act

New information collection requirements subject to the Paperwork Reduction Act, 44 U.S.C. 3501, et seq., and record keeping requirements are contained in the provisions of this regulatory action. Accordingly, this rule was submitted to the Office of Management and Budget for review and approval of paperwork requirements. The final rule was resubmitted for OMB clearance of information collection requirements because of substantial changes. On July 12, 1995, OMB approved the collection of information through July 31, 1998, and assigned approval number 1910–0068.

VIII. Review Under the National Environmental Policy Act

Pursuant to the Council on Environmental Quality Regulations (40 CFR 1500–1508), the Department of Energy has established guidelines for its compliance with the provisions of the National Environmental Policy Act NEPA) of 1969 (42 U.S.C. 4321, *et seq.*). Pursuant to Appendix A of Subpart D of 10 CFR Part 1021, National Environmental Policy Act Implementing Procedures (57 FR 15122, 15152, April 24, 1992 (Categorical Exclusion A6), the Department of Energy has determined that this rule is categorically excluded from the need to prepare an environmental impact statement or environmental assessment.

List of Subjects in 10 CFR Part 451

Electric utilities, Grant programs, Solar energy.

Issued in Washington, DC, on July 13, 1995.

Christine A. Ervin,

Assistant Secretary, Energy Efficiency and Renewable Energy.

For the reasons set forth in the preamble, title 10, chapter II of the Code of Federal Regulations is amended by adding new Part 451 to read as set forth below:

PART 451—RENEWABLE ENERGY PRODUCTION INCENTIVES

Sec.
451.1 Purpose and scope.
451.2 Definitions.
451.3 Who may apply.
451.4 What is a qualified renewable energy facility.
451.5 Where and when to apply.
451.6 Duration of incentive payments.
451.7 Metering requirements.
451.8 Application content requirements.
451.9 Procedures for processing applications.
451.10 Administrative appeals.

Authority: 42 U.S.C. § 7254; 42 U.S.C. § 13317.

§ 451.1 Purpose and scope.

(a) The provisions of this part cover the policies and procedures applicable to the determinations by the Department of Energy (DOE) to make incentive payments for electric energy generated and sold by a qualified renewable energy facility owned by a State or nonprofit electric cooperative under the authority of 42 U.S.C. 13317.

(b) Determinations to make incentive payments under this part are not subject to the provisions of 10 CFR part 600 and such payments shall not be construed to be financial assistance.

§ 451.2 Definitions.

As used in this part—

Closed-loop biomass means any organic material from a plant which is planted exclusively for purposes of being used at a qualified renewable energy facility to generate electricity or from a second harvesting of such a plant if planted before October 1, 1993.

Deciding Official means the Assistant Secretary for Energy Efficiency and Renewable Energy (or any DOE official to whom the authority of the Assistant Secretary may be redelegated by the Secretary of Energy).

DOE means the Department of Energy.

Finance Office means the DOE Office of the Chief Financial Officer (or any office to which that Office's authority may be redelegated by the Secretary of Energy).

Fiscal year means the Federal fiscal year beginning October 1 and ending on September 30 of the following calendar year.

Net electric energy means the metered kilowatt-hours (kWh) generated and sold, and excludes electric energy used within the renewable energy facility to power equipment such as pumps, motors, controls, lighting, heating, cooling, and other systems needed to operate the facility.

Nonprofit electrical cooperative means a cooperative association that is legally obligated to operate on a nonprofit basis and is organized under the laws of any State for the purpose of providing electric service to its members.

Renewable energy facility means a single module or unit, or an aggregation of such units, that generates electric energy which is independently metered and which results from the utilization of a renewable energy source.

Renewable energy source means solar heat, solar light, wind, geothermal energy, and biomass, except for—

(1) Heat from the burning of municipal solid waste; or

(2) Heat from a dry steam geothermal reservoir which—

(i) Has no mobile liquid in its natural state;

(ii) Is a fluid composed of at least 95 percent water vapor; and

(iii) Has an enthalpy for the total produced fluid greater than or equal to 2.791 megajoules per kilogram (1200 British thermal units per pound).

State means the District of Columbia, Puerto Rico, and any of the States, territories, and possessions of the United States.

§ 451.3 Who may apply.

Any owner, or operator with the written consent of the owner, but not both, of a qualified renewable energy facility, may apply for incentive payments for net electric energy generated from a renewable energy source and sold.

§ 451.4 What is a qualified renewable energy facility.

In order to qualify for an incentive payment under this part, a renewable energy facility must meet the following qualifications—

(a) *Owner qualifications.* The owner must be—

(1) A State or a political subdivision of a State (or agency, authority, or instrumentality thereof);

(2) A corporation or association wholly owned, directly or indirectly, by a State or a political subdivision of a State; or

(3) A nonprofit electrical cooperative.

(b) *What constitutes ownership.* The owner must have all rights to the beneficial use of the renewable energy

facility, and legal title must be held by, or for the benefit of, the owner.

(c) *Sales affecting interstate commerce.* The net electric energy generated by the renewable energy facility must be sold to another entity for consideration.

(d) *Type of renewable energy sources.* The source of the electric energy for which an incentive payment is sought must be a renewable energy source, as defined in § 451.2.

(e) *Time of first use.* The date of the first use of a newly constructed renewable energy facility, or a facility covered by paragraph (f) of this section, must occur during the inclusive period beginning October 1, 1993, and ending on September 30, 2003.

(f) *Conversion of non-qualified facilities.* Existing non-qualified facilities that are converted must meet either of the following criteria—

(1) A facility employing solar, wind, geothermal or biomass sources must be refurbished during the allowed time of first use such that the fair market value of any previously used property does not exceed 20% of the facility's total value.

(2) A facility not employing solar, wind, geothermal or biomass sources must be converted in part or in whole to a qualified facility during the allowed time of first use.

(g) *Location.* The qualified renewable energy facility must be located in a State.

§ 451.5 Where and when to apply.

(a) Pre-application and notification. (1) An applicant may submit at any time a pre-application, containing the information described in § 451.8 (a) through (e), to obtain a preliminary and conditional determination of eligibility.

(2) To assist DOE in its budget planning, the owner or operator of a qualified renewable energy facility is requested to provide notification at least 6 months in advance of when a facility is expected to be first used, providing projected information specified in § 451.8 (a) through (e).

(b) Application. (1) Except as provided by paragraph (b)(2) of this section, an application for an incentive payment for electric energy generated and sold in a fiscal year must be filed during the first quarter (October 1 through December 31) of the next fiscal year.

(2) For energy generated and sold in fiscal year 1994, an application for incentive payment must be filed on or before September 5, 1995.

(3) Failure to file an application in any fiscal year for payment for energy generated in the preceding fiscal year shall disqualify the owner or operator from eligibility for any incentive payment for energy generated in that preceding fiscal year.

(c) Where. Applications and notifications to the Department shall be submitted to the Renewable Energy Production Incentive Program, U.S. Department of Energy, Golden Field Office, 1617 Cole Boulevard, Golden, CO, 80401.

§ 451.6 Duration of incentive payments.

Subject to the availability of appropriated funds, DOE shall make incentive payments under this part with respect to a qualified renewable energy facility for 10 fiscal years. Such period shall begin with the fiscal year in which application for payment for electricity generated by the facility is first made and the facility is determined by DOE to be eligible for receipt of an incentive payment. The period for payment under this program ends with fiscal year 2013.

§ 451.7 Metering requirements.

The net electric energy generated and sold (kilowatt-hours) by the owner or operator of a qualified renewable energy facility must be measured by a standard metering device that—

(a) Meets generally accepted industry standards;

(b) Is maintained in proper working order according to the instructions of its manufacturer; and

(c) Is calibrated according to generally accepted industry standards.

§ 451.8 Application content requirements.

An application for an incentive payment under this part must be signed by an authorized executive official and shall provide the following information—

(a) A statement indicating that the applicant is the owner, of the facility or is the operator of the facility and has the written consent of an authorized executive official of the owner to file an application;

(b) The name of the facility or other official designation;

(c) The location and address of the facility and type of renewable energy source;

(d) The name, address, and telephone number of a point of contact to respond to questions or requests for additional information;

(e) A clear statement of how the application satisfies each and every part of the eligibility criteria under § 451.4;

(f) A statement of the annual and monthly metered net electric energy generated and sold during the prior fiscal year by the qualified renewable energy facility, measured in kilowatt-hours, for which an incentive payment is requested;

(g) In the case of a qualified renewable energy facility which generates electric energy using a fossil fuel, nuclear energy, or other non-qualified energy source in addition to using a renewable energy source, a statement of the net electric energy generated, measured in kilowatt-hours, attributable to the renewable energy source, including a calculation showing the total monthly and annual kilowatt-hours generated and sold during the fiscal year multiplied by a fraction consisting of the heat input, as measured in appropriate energy units, received by the working fluid from the renewable energy sources divided by the heat input, as measured in the same energy units, received by the working fluid from all energy sources;

(h) the amounts of accrued electric energy, by sources and by year, in kilowatt-hours, for which the applicant previously applied and DOE did not make an incentive payment because of insufficient appropriations;

(i) The total amount of electric energy for which payment is requested, including the net electric energy generated in the prior fiscal year, as determined according to paragraph (f) or (g) of this section, and the accrued energy as determined according to paragraph (h) of this section;

(j) Preferred method of payment (check or wire transfer) and instructions;

(k) A statement agreeing to retain records for a period of three (3) years which substantiate the annual and monthly metered number of kilowatt-hours generated and sold, and to provide access to, or copies of, such records within 30 days of a written request by DOE; and

(l) A statement signed by an authorized executive official certifying that the information contained in the application is accurate.

(m) If a nonprofit electric cooperative, a statement certifying that no claim for tax credit has been made for the same electricity for which incentive payments are requested.

§ 451.9 Procedures for processing applications.

(a) *Supplemental information.* DOE may request supplementary information relating to the application.

(b) *Audits.* DOE may require the applicant to conduct at its own expense and submit an independent audit, or DOE may conduct an audit, to verify the number of kilowatt-hours claimed to have been generated and sold by the qualified renewable energy facility and

for which an incentive payment has been requested or made.

(c) *DOE determinations.* Upon evaluating the application and any other relevant information, DOE shall determine:

(1) Eligibility of the applicant for receipt of an incentive payment, based on the criteria for eligibility specified in this part; and

(2) The number of kilowatt-hours to be used in calculating the incentive payment, based on the sum of net electric energy generated from a qualified renewable energy source at the qualified renewable energy facility and sold during the prior fiscal year, and any accrued energy.

(d) *Calculating payments.* Subject to the provisions of paragraph (e) of this section, incentive payments under this part shall be determined by multiplying the number of kilowatt-hours determined under § 451.9(c)(2) by 1.5 cents per kilowatt-hour, and adjusting that product for inflation for each fiscal year beginning after calendar year 1993 in the same manner as provided in section 29(d)(2)(B) of the Internal Revenue Code of 1986, except that in applying such provisions calendar year 1993 shall be substituted for calendar year 1979.

(e) *Insufficient Funds.* The Assistant Secretary for Energy Efficiency and Renewable Energy shall determine the extent to which appropriated funds are available to be obligated under this program for each fiscal year. If funds determined to be available under the preceding sentence are not sufficient to make full incentive payments for all approved applications, DOE shall—

(1) Make incentive payments first, and if necessary on a pro rata basis, to owners or operators of qualified renewable energy facilities using solar, wind, geothermal, and closed-loop biomass technologies;

(2) Make incentive payments second, and if necessary on a pro rata basis, to owners or operators of all other qualified renewable energy facilities.

(3) Treat the number of kilowatt-hours for which an incentive payment is not made as a result of insufficient appropriations as accrued energy for which subsequent application for incentive payment may be made.

(f) *Notice to applicant.* After calculating the amount of the incentive payment under paragraphs (e) through (g) of this section, the DOE Deciding Official shall then issue a written notice of the determination to the applicant—

(1) Approving the application as eligible for payment and forwarding a copy to the DOE Finance Office with a request to pay;

(2) Setting forth the calculation of the approved amount of the incentive payment; and

(3) Stating the amount of accrued energy, measured in kilowatt-hours, for each qualified renewable energy facility, if any, and the energy source for same.

(g) *Disqualification.* If the application does not meet the requirements of this part or some of the kilowatt-hours claimed in the application are disallowed as unqualified, the Deciding Official shall issue a written notice denying the application in whole or in part with an explanation of the basis for denial.

§ 451.10 Administrative appeals.

(a) In order to exhaust administrative remedies, an applicant who receives a notice denying an application in whole or in part shall appeal, on or before 45 days from date of the notice issued by the DOE Deciding Official, to the Office of Hearings and Appeals, 1000 Independence Avenue, S.W., Washington, D.C. 20585, in accordance with the procedures set forth in subpart C of 10 CFR part 1003.

(b) If an applicant does not appeal under paragraph (a) of this section, the determination of the DOE Deciding Official shall become final for DOE and judicially unreviewable.

(c) If an applicant appeals on a timely basis under paragraph (a) of this section, the decision and order of the Office of Hearings and Appeals shall be final for DOE.

(d) If the Office of Hearings and Appeals orders an incentive payment, the DOE Deciding Official shall send a copy of such order to the DOE Finance Office with a request to pay.

[FR Doc. 95–17753 Filed 7–14–95; 2:32 pm]

BILLING CODE 6450–01–P–M

FEDERAL HOUSING FINANCE BOARD

12 CFR Parts 937 and 939

[No. 95–06]

Repeal of the Nondiscrimination in Federally Assisted Programs and Housing Opportunity Allowance Program Regulations

AGENCY: Federal Housing Finance Board.

ACTION: Final rule.

SUMMARY: The Federal Housing Finance Board (Board) is repealing two regulations it has determined are no longer necessary. This is intended to reduce excess regulation, eliminate obsolete regulations and avoid any public confusion as to the nature of the Board's activities. The two obsolete regulations relate to the housing opportunity allowance program and nondiscrimination in federally assisted programs.

DATES: This final rule is effective on July 19, 1995.

FOR FURTHER INFORMATION CONTACT: Brandon B. Straus, Attorney-Advisor, Office of General Counsel, (202) 408–2589, Federal Housing Finance Board, 1777 F Street, NW., Washington, DC 20006.

SUPPLEMENTARY INFORMATION:

I. Statutory And Regulatory Background

As a result of an ongoing internal review of its regulations, the Board has identified parts 939 (Nondiscrimination in Federally Assisted Programs) and 937 (Housing Opportunity Allowance Program) as obsolete, for the reasons set forth below. Accordingly, in an effort to meet the goals of the Regulatory Reinvention Initiative of the Vice President's National Performance Review, the Board intends to repeal parts 937 and 939.

A. Part 937

Part 937 of the Board's regulations sets forth the Housing Opportunity Allowance Program (HOAP). *See* 12 CFR part 937. The HOAP initially appeared in part 527 of the regulations of the Board's predecessor agency, the Federal Home Loan Bank Board (Bank Board). When Congress abolished the Bank Board in 1989, *See* section 401 of the Financial Institutions Reform, Recovery, and Enforcement Act of 1989, Pub. L. 101–73, 103 Stat. 183 (Aug. 9, 1989), (codified at 12 U.S.C. 1437 note), part 527 was redesignated as part 937 of the Board's regulations. *See* 54 FR 36759 (Sept. 5, 1989).

The Bank Board established the HOAP to implement section 101 of the Emergency Home Finance Act of 1970 (EHFA). *See* Pub. L. 91–351, sec. 101, 84 Stat. 450 (July 24, 1970) (codified at 12 U.S.C. 1430 note (1988) (*removed,* 12 U.S.C. 1430 (Supp. IV 1992)). Section 101 of the EHFA authorized the appropriation of $250 million, without fiscal year limitation, to be used by the Bank Board for disbursement to the Federal Home Loan Banks (Banks) for the purpose of adjusting the effective interest rates on shorter, and long-term advances to members, the proceeds of which were to be used to assist in providing housing for low- and middle-income families. *See* EHFA sec. 101, 84 Stat. 450.

Since that time, however, the HOAP has ceased operations. Applications for funds under the HOAP have not been accepted since 1978, *see* 43 FR 14508 (Apr. 6, 1978), and none of the Banks now is involved with the HOAP. There have been no further congressional appropriations for use by the HOAP, and the provisions of section 101 of the EHFA no longer appear in the most recent version of the United States Code. *See* 12 U.S.C. 1430. Absent a statutory authorization and funding mechanism or any ongoing program activity, the HOAP is, effectively, non-existent.

B. Part 939

Part 939 of the Board's regulations generally prohibits discrimination on the grounds of race, color, or national origin in connection with any program or activity that receives federal financial assistance from the Board. *See* 12 CFR 939.1. Part 939 initially was promulgated as part 529 of the Bank Board's regulations. When Congress abolished the Bank Board in 1989, part 529 was redesignated as part 939 of the Board's regulations. *See* 54 FR 36759 (Sept. 5, 1989).

The Bank Board initially issued the regulation that is now part 939 to implement the provisions of title VI of the Civil Rights Act of 1964 (title IV). *See* Pub. L. 88–352, tit. VI, secs. 601, 602, 78 Stat. 252 (July 2, 1964). Title VI requires federal agencies that are empowered to extend federal financial assistance to any program or activity to issue rules that ensure that no person in the United States shall, on the ground of race, color, or national origin, be excluded from participation in, be denied the benefits of, or subjected to discrimination under any program or activity receiving federal financial assistance. 42 U.S.C. 2000d, 2000d–1.

Part 939 requires applicants for federal financial assistance provided by the Board to furnish assurances that they will comply with the nondiscrimination requirement of part 939. *See id.* § 939.5. Part 939 also sets forth procedures for effecting compliance with the nondiscrimination requirement, including the collection of reports, the conduct of investigations, and the holding of administrative hearings. *See id.* § 939.6–939.10.

Appendix A to part 939 lists the programs and activities to which part 939 applies. *See id.* part 939, Appendix A. The only program or activity listed in appendix A is the HOAP, which, as discussed previously, no longer is in operation. Absent the HOAP, the Board currently is not authorized to extend federal financial assistance to any program or activity.

II. Analysis of the Final Rule

Since the HOAP is no longer an operating program and the Board does not now extend federal financial assistance to any other programs or activities, the Board is not required to maintain either part 937 or part 939 as part of its regulations.

In fact, retaining parts 937 and 939 as Board regulations published in the Code of Federal Regulations may cause confusion to the public, because part 937 incorrectly indicates that the HOAP remains in operation, and part 939 incorrectly implies that the Board extends federal financial assistance to one or more of the programs or activities it administers. Repeal of parts 937 and 939 will avoid any potential confusion.

Repeal of these regulations also will be consistent with the goal of the Vice President's National Performance Review to reduce the total number of regulations of executive agencies. *See* Report of the National Performance Review 32–33 (September 17, 1993); E.O. 12861, 58 FR 48255 (Sept. 14, 1993).

For the foregoing reasons, the Board has decided to repeal parts 937 and 939 of its regulations, pursuant to its general rulemaking authority under section 2B(a)(1) of the Federal Home Loan Bank Act. *See* 12 U.S.C. 1422b(a)(1).

III. Notice and Public Participation

Publication of notice of a proposed rulemaking is not required by the Administrative Procedure Act (APA), 5 U.S.C. 551 *et seq.*, because the Board for good cause finds that notice and comment procedure is unnecessary and contrary to the public interest in this instance. *See id.* section 553(b)(3)(B). Compliance with the public notice and comment procedure requirement of APA section 553 is unnecessary because the final rule repeals sections of the Board's regulations that no longer have any effect on the public. Further, the Board believes that it is in the public interest to repeal parts 937 and 939 as soon as possible in order to avoid perpetuating the appearance that these provisions continue to affect the public and the activities of the Board.

IV. Effective Date

The Board finds that under APA section 553(d)(3), there is good cause that the final rule be effective upon publication for the reasons stated in part III of the Supplementary Information.

V. Regulatory Flexibility Act

This final rule will not impose any regulatory requirements on small entities, because it repeals provisions of the Board's regulations. Therefore, in accordance with the Regulatory Flexibility Act, 5 U.S.C. 601 *et seq.*, the Board hereby certifies that this final rule, as promulgated, will not have a significant economic impact on a substantial number of small entities.

List of Subjects

12 CFR Part 937

Federal home loan banks, Low and moderate income housing, Mortgages, Reporting and recordkeeping requirements.

12 CFR Part 939

Administrative practice and procedure, Civil rights.

Accordingly and under the authority of 12 U.S.C. 1422b(a)(1), chapter IX, title 12, Code of Federal Regulations is hereby amended as follows:

PART 937—[REMOVED]

1. Part 937 is removed.

PART 939—[REMOVED]

2. Part 939 is removed.

Dated: July 13, 1995.

By the Federal Housing Finance Board.

Bruce A. Morrison,

Chairman.

[FR Doc. 95–17684 Filed 7–18–95; 8:45 am]

BILLING CODE 6725–01–M

DEPARTMENT OF TRANSPORTATION

Federal Aviation Administration

14 CFR Part 25

[Docket No. NM–113; Special Conditions No. 25–ANM–101]

Special Conditions: Modified Boeing Company Model 747–100 and 747–200 Airplane; High Intensity Radiated Fields (HIRF)

AGENCY: Federal Aviation Administration, DOT.

ACTION: Final special conditions; request for comments.

SUMMARY: These special conditions are issued for the Boeing Company Model 747–100 and 747–200 modified by B & D Instruments & Avionics, Inc., of Valley Center, Kansas. This airplane will be equipped with a Flat Panel Engine Instrument Display that will perform critical functions. The applicable regulations do not contain

adequate or appropriate safety standards for the protection of the Flat Panel Engine Instrument Display from the effects of high-intensity radiated fields (HIRF). These special conditions provide the additional safety standards that the Administrator considers necessary to ensure that the critical functions performed by this system are maintained when the airplane is exposed to HIRF.

DATES: The effective date of these special conditions is September 5, 1995.

ADDRESSES: Comments on these final special conditions, request for comments, may be mailed in duplicate to: Federal Aviation Administration, Office of the Assistant Chief Counsel, Attn: Rules Docket (ANM–7), Docket No. NM–113, 1601 Lind Avenue SW., Renton, Washington, 98055–4056; or delivered in duplicate to the Office of the Assistant Chief Counsel at the above address. Comments must be marked ''Docket No. NM–113.'' Comments may be inspected in the Rules Docket weekdays, except Federal holidays between 7:30 a.m. and 4 p.m.

FOR FURTHER INFORMATION CONTACT: Mark Quam, FAA, Standardization Branch, Transport Airplane Directorate, Aircraft Certification Service, 1601 Lind Avenue SW., Renton, Washington 98055–4056; telephone (206) 227–2145.

SUPPLEMENTARY INFORMATION:

Comments Invited

The FAA has determined that good cause exists for making these special conditions effective upon issuance; however, interested persons are invited to submit such written data, views, or arguments as they may desire. Communications should identify the regulatory docket and special conditions number and be submitted in duplicate to the address specified above. All communications received on or before the closing date for comments will be considered by the Administrator. These special conditions may be changed in light of the comments received. All comments submitted will be available in the Rules Docket for examination by interested persons, both before and after the closing date for comments. A report summarizing each substantive public contact with FAA personnel concerning this rulemaking will be filed in the docket. Persons wishing the FAA to acknowledge receipt of their comments submitted in response to this request must submit with those comments a self-addressed, stamped postcard on which the following statement is made: ''Comments to Docket No. NM–113.'' The postcard will be date stamped and returned to the commenter.

Background

On April 7, 1995, B & D Instruments & Avionics, Inc., of Valley Center, Kansas, applied for a supplemental type certificate to replace the existing engine instruments (EPR, FF, N1, N2, EGT) with a Flat Panel Display System in the Boeing Company Model 747–100 and 747–200. The Model 747–100 is a passenger transport category airplane, and is capable of operating to an altitude of 45,100 feet. For all flights, 3 persons (pilot, copilot, flight engineer) are required. The Model 747–200 airplane is an extended range passenger version of the basic 747–100 series aircraft. The airplanes can carry up to 550 passengers depending on the exit and interior configuration. The original equipment installed in these airplanes presented the required engine information in the form of analog displays. The proposed modification would replace the existing engine instruments (EPR, FF, N1, N2, EGT) with a digital Flat Panel Engine Instrument Display System. The installation of the Flat Panel Engine Instrument Display System is potentially vulnerable to high-intensity radiated fields (HIRF) external to the airplane.

Supplemental Type Certification Basis

Under the provisions of § 21.101 of the Federal Aviation Regulations (FAR), B & D Instruments & Avionics, Inc., must show that the altered Boeing Company Model 747–100 and 747–200 airplanes continue to meet the applicable provisions of the regulations incorporated by reference in Type Certificate No. A20WE, or the applicable regulations in effect on the date of application for the change. The regulations incorporated by reference in the type certificate are commonly referred to as the ''original type certification basis.''

The regulations incorporated by reference in Type Certificate No. A20WE include the following for the Boeing Company Model 747–100 and 747–200 airplanes:

Part 25 of the FAR effective February 1, 1965, Amendments 25–1 through 25–8 plus Amendments 25–15, 25–17, 25–18, 25–20, and 25–39 transmitted by FAA letter dated February 4, 1977, and special conditions summarized for record purposes as enclosed with FAA letter to The Boeing Company dated February 20, 1970. In addition, the airplanes must be shown to meet the noise standards of part 36 of the FAR.

In addition, under § 21.101(b)(1), the following sections of the FAR apply to the Flat Panel Engine Instrument Display installation: §§ 25.1301(d), 25.1305 and 25.1322, as amended by Amendment 25–38; and §§ 25.1309, 25.1321 (a), (c), (d), and (e), 25.1331, 25.1337, as amended by Amendment 25–40. These special conditions form an additional part of the supplemental type certification basis.

If the Administrator finds that the applicable airworthiness regulations (i.e., part 25, as amended) do not contain adequate or appropriate safety standards for the Boeing Company Model 747–100 and 747–200 airplanes because of a novel or unusual design feature, special conditions are prescribed under the provisions of § 21.16 to establish a level of safety equivalent to that established in the regulations.

Special conditions, as appropriate, are issued in accordance with § 11.49 of the FAR after public notice, as required by §§ 11.28 and 11.29, and become part of the type certification basis in accordance with § 21.101(b)(2).

Special conditions are initially applicable to the model for which they are issued. Should the applicant apply for a supplemental type certificate to modify any other model included on the same type certificate to incorporate the same novel or unusual design feature, the special conditions would also apply to the other model under the provisions of § 21.101(a)(1).

Discussion

There is no specific regulation that addresses protection requirements for electrical and electronic systems from high-intensity radiated fields (HIRF). Increased power levels from ground-based radio transmitters, and the growing use of sensitive electrical and electronic systems to command and control airplanes, have made it necessary to provide adequate protection.

To ensure that a level of safety is achieved equivalent to that intended by the regulations incorporated by reference, special conditions are needed for the modified Boeing Model 747–100 and 747–200 airplanes that would require that the Flat Panel Engine Instrument Display System be designed and installed to preclude component damage and interruption of function due to the effects of HIRF.

High-Intensity Radiated Fields (HIRF)

With the trend toward increased power levels from ground-based transmitters, plus the advent of space and satellite communications, coupled with electronic command and control of the airplane, the immunity of critical digital avionics systems, such as the Flat

Panel Engine Instrument Display System, to HIRF must be established.

It is not possible to precisely define the HIRF to which the airplanes will be exposed in service. There is also uncertainty concerning the effectiveness of airframe shielding for HIRF. Furthermore, coupling of electromagnetic energy to cockpit-installed equipment through the cockpit window apertures is undefined. Based on surveys and analysis of existing HIRF emitters, an adequate level of protection exists which compliance with the HIRF protection special condition is shown with either paragraph 1 or 2 below:

1. A minimum threat of 100 volts per meter peak electric field strength from 10 KHz to 18 GHz.

a. The threat must be applied to the system elements and their associated wiring harnesses without the benefit of airframe shielding.

b. Demonstration of this level of protection is established through system tests and analysis.

2. A threat external to the airframe of the following field strengths for the frequency ranges indicated:

Frequency	Peak (V/M)	Average (V/M)
10 KHz–100 KHz	50	50
100 KHz–500 KHz	60	60
500 KHz–2000 KHz	70	70
2 MHz–30 MHz	200	200
30 MHz–100 MHz	30	30
100 MHz–200 MHz	150	33
200 MHz–400 MHz	70	70
400 MHz–700 MHz	4,020	935
700 MHz–1000 MHz	1,700	170
1 GHz–2 GHz	5,000	990
2 GHz–4 GHz	6,680	840
4 GHz–6 GHz	6,850	310
6 GHz–8 GHz	3,600	670
8 GHz–12 GHz	3,500	1,270
12 GHz–18 GHz	3,500	360
18 GHz–40 GHz	2,100	750

As discussed above, these special conditions are applicable to the Boeing Company Model 747–100 and 747–200 airplanes, modified by B & D Instruments & Avionics, Inc. Should B & D Instruments & Avionics, Inc. apply at a later date for a supplemental type certificate to modify any other model included on Type Certificate No. A20WE to incorporate the same novel or unusual design feature, the special conditions would apply to that model as well, under the provisions of § 21.101(a)(1).

Conclusion

This action affects only certain unusual or novel design features on Boeing Company Model 747–100 and 747–200 airplanes, modified by B & D Instruments & Avionics, Inc. It is not a rule of general applicability and affects only the applicant who applied to the FAA for approval of this feature on this airplane.

The substance of these special conditions has been subjected to the notice and comment procedure in several prior instances and has been derived without substantive change from those previously issued. It is unlikely that prior public comment would result in a significant change from the substance contained herein. For this reason, and because a delay would significantly affect the certification of the airplane, which is imminent, the FAA has determined that prior public notice and comment are unnecessary and impracticable, and good cause exists for adopting these special conditions immediately. Therefore, these special conditions are being made effective upon issuance. The FAA is requesting comments to allow interested persons to submit views that may not have been submitted in response to the prior opportunities for comment described above.

List of Subjects in 14 CFR Part 25

Aircraft, Aviation safety, Reporting and recodkeeping requirements.

The authority citation for these special conditions is as follows:

Authority: 49 U.S.C. app. 1344, 1348(c), 1352 1354(a), 1355, 1421 through 1431, 1502, 1651(b)(2), 42 U.S.C. 1857f–10, 4321 et seq.; E.O. 11514; and 49 U.S.C. 106(g).

The Special Conditions

Accordingly, pursuant to the authority delegated to me by the Administrator, the following special conditions are issued as part of the supplemental type certification basis for the Boeing Company Model 747–100 and 747–200 airplanes, as modified by B & D Instruments & Avionics, Inc:

1. *Protection from Unwanted Effects of High-Intensity Radiated Fields (HIRF).* Each electrical and electronic system that performs critical functions must be designed and installed to ensure that the operation and operational capability of these systems to perform critical functions are not adversely affected when the airplane is exposed to high intensity radiated fields external to the airplane.

2. The following definition applies with respect to this special condition: *Critical Function*. Functions whose failure would contribute to or cause a failure condition that would prevent the continued safe flight and landing of the airplane.

Issued in Renton, Washington, on June 29, 1995.

Darrell M. Pederson,

Acting Manager, Transport Airplane Directorate, Aircraft Certification Service, ANM–100.

[FR Doc. 95–17589 Filed 7–18–95; 8:45 am]

BILLING CODE 4910–13–M

---

14 CFR Part 25

[Docket No. NM–114; Special Conditions No. 25–ANM–102]

Special Conditions: Modified McDonnell Douglas Corporation Model DC–10–30 and DC–10–40 Airplane; High Intensity Radiated Fields (HIRF)

AGENCY: Federal Aviation Administration, DOT.

ACTION: Final special conditions; request for comments.

SUMMARY: These special conditions are issued for the McDonnell Douglas Corporation Model DC–10–30 and DC–10–40 modified by B & D Instruments & Avionics, Inc., of Valley Center, Kansas. This airplane will be equipped with a Flat Panel Engine Instrument Display that will perform critical functions. The applicable regulations do not contain adequate or appropriate safety standards for the protection of the Flat Panel Engine Instrument Display from the effects of high-intensity radiated fields (HIRF). These special conditions provide the additional safety standards that the Administrator considers necessary to ensure that the critical functions performed by this system are maintained when the airplane is exposed to HIRF.

DATES: The effective date of these special conditions is June 29, 1995. Comments must be received on or before September 5, 1995.

ADDRESSES: Comments on these final special conditions, request for comments, may be mailed in duplicate to: Federal Aviation Administration, Office of the Assistant Chief Counsel, Attn: Rules Docket (ANM–7), Docket No. NM–114, 1601 Lind Avenue SW., Renton, Washington, 98055–4056; or delivered in duplicate to the Office of the Assistant Chief Counsel at the above address. Comments must be marked ''Docket No. NM–114.'' Comments may be inspected in the Rules Docket weekdays, except Federal holidays, between 7:30 a.m. and 4 p.m.

FOR FURTHER INFORMATION CONTACT: Mark Quam, FAA, Standardization Branch, Transport Airplane Directorate, Aircraft Certification Service, 1601 Lind Avenue SW., Renton, Washington 98055–4056; telephone (206) 227–2145.

SUPPLEMENTARY INFORMATION:

Comments Invited

The FAA has determined that good cause exists for making these special conditions effective upon issuance; however, interested persons are invited to submit such written data, views, or arguments as they may desire. Communications should identify the regulatory docket and special conditions number and be submitted in duplicate to the address specified above. All communications received on or before the closing date for comments will be considered by the Administrator. These special conditions may be changed in light of the comments received. All comments submitted will be available in the Rules Docket for examination by interested persons, both before and after the closing date for comments. A report summarizing each substantive public contact with FAA personnel concerning this rulemaking will be filed in the docket. Persons wishing the FAA to acknowledge receipt of their comments submitted in response to this request must submit with those comments a self-addressed, stamped postcard on which the following statement is made: ''Comments to Docket No. NM–114.'' The postcard will be date stamped and returned to the commenter.

Background

On April 7, 1995, B & D Instruments & Avionics, Inc., of Valley Center, Kansas, applied for a supplemental type certificate to replace the existing engine instruments (EPR, FF, N1, N2, EGT) with a Flat Panel Display System in the McDonnell Douglas Corporation Model DC–10–30 and DC–10–40. The Model DC–10–30 is a passenger transport category airplane, and is capable of operating to an altitude of 42,000 feet. For all flights, 3 persons (pilot, copilot, flight engineer) are required. The original equipment installed in these airplanes presented the required engine information in the form of analog displays. The proposed modification would replace the existing engine instruments (EPR, FF, N1, N2, EGT) with a digital Flat Panel Engine Instrument Display System. The installation of the Flat Panel Engine Instrument Display System is potentially vulnerable to high-intensity radiated fields (HIRF) external to the airplane.

Supplemental Type Certification Basis

Under the provisions of § 21.101 of the Federal Aviation Regulations (FAR), B & D Instruments & Avionics, Inc, must show that the altered McDonnell Douglas Corporation Model DC–10–30 and DC–10–40 airplanes continue to meet the applicable provisions of the regulations incorporated by reference in Type Certificate No. A22WE, or the applicable regulations in effect on the date of application for the change. The regulations incorporated by reference in the type certificate are commonly referred to as the ''original type certification basis.''

The regulations incorporated by reference in Type Certificate No. A22WE include the following for the McDonnell Douglas Corporation Model DC–10–30 and DC–10–40 airplanes:

Part 25 of the FAR effective February 1, 1965, Amendments 25–1 through 25–22.

In addition, under § 21.101(b)(1), the following sections of the FAR apply to the Flat Panel Engine Instrument Display installation: §§ 25.1301(d), 25.1305 and 25.1322, as amended by Amendment 25–38; and §§ 25.1309, 25.1321 (a), (c), (d), and (e), 25.1331, 25.1337, as amended by Amendment 25–40. These special conditions form an additional part of the supplemental type certification basis.

If the Administrator finds that the applicable airworthiness regulations (i.e., part 25, as amended) do not contain adequate or appropriate safety standards for the McDonnell Douglas Corporation Model DC–10–30 and DC–10–40 airplanes because of a novel or unusual design feature, special conditions are prescribed under the provisions of § 21.16 to establish a level of safety equivalent to that established in the regulations.

Special conditions, as appropriate, are issued in accordance with § 11.49 of the FAR after public notice, as required by §§ 11.28 and 11.29, and become part of the type certification basis in accordance with § 21.101(b)(2).

Special conditions are initially applicable to the model for which they are issued. Should the applicant apply for a supplemental type certificate to modify any other model included on the same type certificate to incorporate the same novel or unusual design feature, the special conditions would also apply to the other model under the provisions of § 21.101(a)(1).

Discussion

There is no specific regulation that addresses protection requirements for electrical and electronic systems from high-intensity radiated fields (HIRF). Increased power levels from ground-based radio transmitters, and the growing use of sensitive electrical and electronic systems to command and control airplanes, have made it necessary to provide adequate protection.

To ensure that a level of safety is achieved equivalent to that intended by the regulations incorporated by reference, special conditions are needed for the modified Boeing Model DC–10–30 and DC–10–40 airplanes that would require that the Flat Panel Engine Instrument Display System be designed and installed to preclude component damage and interruption of function due to the effects of HIRF.

High-Intensity Radiated Fields (HIRF)

With the trend toward increased power levels from ground-based transmitters, plus the advent of space and satellite communications, coupled with electronic command and control of the airplane, the immunity of critical digital avionics systems, such as the Flat Panel Engine Instrument Display System, to HIRF must be established.

It is not possible to precisely define the HIRF to which the airplanes will be exposed in service. There is also uncertainty concerning the effectiveness of airframe shielding for HIRF. Furthermore, coupling of electromagnetic energy to cockpit-installed equipment through the cockpit window apertures is undefined. Based on surveys and analysis of existing HIRF emitters, an adequate level of protection exists when compliance with the HIRF protection special condition is shown with either paragraphs 1 or 2 below:

1. A minimum threat of 100 volts per meter peak electric field strength from 10 KHz to 18 GHz.

a. The threat must be applied to the system elements and their associated wiring harnesses without the benefit of airframe shielding.

b. Demonstration of this level of protection is established through system tests and analysis.

2. A threat external to the airframe of the following field strengths for the frequency ranges indicated:

Frequency	Peak (V/M)	Average (V/M)
10 KHz–100 KHz	50	50
100 KHz–500 KHz	60	60
500 KHz–2000 KHz	70	70
2 MHz–30 MHz	200	200
30 MHz–100 MHz	30	30
100 MHz–200 MHz	150	33
200 MHz–400 MHz	70	70
400 MHz–700 MHz	4,020	935
700 MHz–1000 MHz	1,700	170
1 GHz–2 GHz	5,000	990
2 GHz–4 GHz	6,680	840
4 GHz–6 GHz	6,850	310
6 GHz–8 GHz	3,600	670
8 GHz–12 GHz	3,500	1,270

Frequency	Peak (V/M)	Average (V/M)
12 GHz–18 GHz	3,500	360
18 GHz–40 GHz	2,100	750

As discussed above, these special conditions are applicable to the McDonnell Douglas Corporation Model DC–10–30 and DC–10–40 airplanes, modified by B & D Instruments & Avionics, Inc. Should B & D Instruments & Avionics, Inc. apply at a later date for a supplemental type certificate to modify any other model included on Type Certificate No. A22WE to incorporate the same novel or unusual design feature, the special conditions would apply to that model as well, under the provisions of § 21.101(a)(1).

Conclusion

This action affects only certain unusual or novel design features on McDonnell Douglas Corporation Model DC–10–30 and DC–10–40 airplanes, modified by B&D Instruments & Avionics, Inc. It is not a rule of general applicability and affects only the applicant who applied to the FAA for approval of this feature on this airplane.

The substance of these special conditions has been subjected to the notice and comment procedure in several prior instances and has been derived without substantive change from those previously issued. It is unlikely that prior public comment would result in a significant change from the substance contained herein. For this reason, and because a delay would significantly affect the certification of the airplane, which is imminent, the FAA has determined that prior public notice and comment are unnecessary and impracticable, and good cause exists for adopting these special conditions immediately. Therefore, these special conditions are being made effective upon issuance. The FAA is requesting comments to allow interested persons to submit views that may not have been submitted in response to the prior opportunities for comment described above.

List of Subjects in 14 CFR Part 25

Aircraft, Aviation safety, Reporting and recordkeeping requirements.

The authority citation for these special conditions is as follows:

Authority: 49 U.S.C. app. 1344, 1348(c), 1352, 1354(a), 1355, 1421 through 1431, 1502, 1651(b)(2), 42 U.S.C. 1857f–10, 4321 et seq.; E.O. 11514; and 49 U.S.C. 106(g).

The Special Conditions

Accordingly, pursuant to the authority delegated to me by the Administrator, the following special conditions are issued as part of the supplemental type certification basis for the McDonnell Douglas Corporation Model DC–10–30 and DC–10–40 airplanes, as modified by B&D Instruments & Avionics, Inc:

1. *Protection From Unwanted Effects of High-Intensity Radiated Fields (HIRF).* Each electrical and electronic system that performs critical functions must be designed and installed to ensure that the operation and operational capability of these systems to perform critical functions are not adversely affected when the airplane is exposed to high intensity radiated fields external to the airplane.

2. The following definition applies with respect to this special condition: *Critical Function.* Functions whose failure would contribute to or cause a failure condition that would prevent the continued safe flight and landing of the airplane.

Issued in Renton, Washington, on June 29, 1995.

Darrell M. Pederson,

Acting Manager, Transport Airplane Directorate, Aircraft Certification Service, ANM–100.

[FR Doc. 95–17588 Filed 7–18–95; 8:45 am]

BILLING CODE 4910–13–M

---

14 CFR Part 39

[Docket No. 94–NM–36–AD; Amendment 39–9301; AD 95–14–07]

Airworthiness Directives; Aerospatiale Model ATR72–100 and –200 Series Airplanes

AGENCY: Federal Aviation Administration, DOT.

ACTION: Final rule.

SUMMARY: This amendment adopts a new airworthiness directive (AD), applicable to certain Model ATR72–100 and –200 series airplanes, that requires a one-time dye penetrant inspection to detect cracking in certain hinge pins of the nose landing gear (NLG), and replacement of cracked pins with crack-free pins. This amendment is prompted by reports of cracking of certain hinge pins in the NLG. The actions specified by this AD are intended to prevent collapse of the NLG due to cracking of the hinge pins.

DATES: Effective August 18, 1995.

The incorporation by reference of certain publications listed in the regulations is approved by the Director of the Federal Register as of August 18, 1995.

ADDRESSES: The service information referenced in this AD may be obtained from Aerospatiale, 316 Route de Bayonne, 31060 Toulouse, Cedex 03, France. This information may be examined at the Federal Aviation Administration (FAA), Transport Airplane Directorate, Rules Docket, 1601 Lind Avenue SW., Renton, Washington; or at the Office of the Federal Register, 800 North Capitol Street NW., suite 700, Washington, DC.

FOR FURTHER INFORMATION CONTACT: Gary Lium, Aerospace Engineer, Standardization Branch, ANM–113, FAA, Transport Airplane Directorate, 1601 Lind Avenue SW., Renton, Washington 98055–4056; telephone (206) 227–1112; fax (206) 227–1149.

SUPPLEMENTARY INFORMATION: A proposal to amend part 39 of the Federal Aviation Regulations (14 CFR part 39) to include an airworthiness directive (AD) that is applicable to certain Aerospatiale Model ATR72–100 and –200 series airplanes was published as a supplemental notice of proposed rulemaking (NPRM) in the **Federal Register** on March 22, 1995 (60 FR 15084). That action proposed to require a one-time dye penetrant inspection to detect cracking in certain hinge pins in the nose landing gear (NLG), and replacement of cracked pins with crack-free pins.

Interested persons have been afforded an opportunity to participate in the making of this amendment. Due consideration has been given to the single comment received.

The commenter supports the proposed rule.

After careful review of the available data, including the comment noted above, the FAA has determined that air safety and the public interest require the adoption of the rule as proposed.

The FAA estimates that 28 airplanes of U.S. registry will be affected by this AD, that it will take approximately 6 work hours per airplane to accomplish the required actions, and that the average labor rate is $60 per work hour. Based on these figures, the total cost impact of the AD on U.S. operators is estimated to be $10,080, or $360 per airplane.

The total cost impact figure discussed above is based on assumptions that no operator has yet accomplished any of the requirements of this AD action, and that no operator would accomplish those actions in the future if this AD were not adopted.

The regulations adopted herein will not have substantial direct effects on the States, on the relationship between the national government and the States, or on the distribution of power and responsibilities among the various levels of government.

Therefore, in accordance with Executive Order 12612, it is determined that this final rule does not have sufficient federalism implications to warrant the preparation of a Federalism Assessment.

For the reasons discussed above, I certify that this action (1) is not a ''significant regulatory action'' under Executive Order 12866; (2) is not a ''significant rule'' under DOT Regulatory Policies and Procedures (44 FR 11034, February 26, 1979); and (3) will not have a significant economic impact, positive or negative, on a substantial number of small entities under the criteria of the Regulatory Flexibility Act. A final evaluation has been prepared for this action and it is contained in the Rules Docket. A copy of it may be obtained from the Rules Docket at the location provided under the caption **ADDRESSES.**

List of Subjects in 14 CFR Part 39

Air transportation, Aircraft, Aviation safety, Incorporation by reference, Safety.

Adoption of the Amendment

Accordingly, pursuant to the authority delegated to me by the Administrator, the Federal Aviation Administration amends part 39 of the Federal Aviation Regulations (14 CFR part 39) as follows:

PART 39—AIRWORTHINESS DIRECTIVES

1. The authority citation for part 39 continues to read as follows:

Authority: 49 U.S.C. App. 1354(a), 1421 and 1423; 49 U.S.C. 106(g); and 14 CFR 11.89.

§ 39.13 [Amended]

2. Section 39.13 is amended by adding the following new airworthiness directive:

95–14–07 Aerospatiale: Amendment 39–9301. Docket 94–NM–36–AD.

Applicability: Model ATR72–100 and –200 series airplanes equipped with hinge pins installed at the nose landing gear (NLG) that are manufactured by Nardi, have part number D56867, and have serial numbers beginning with the letter ''N;'' certificated in any category.

Note 1: This AD applies to each airplane identified in the preceding applicability provision, regardless of whether it has been modified, altered, or repaired in the area subject to the requirements of this AD. For airplanes that have been modified, altered, or repaired so that the performance of the requirements of this AD is affected, the owner/operator must use the authority provided in paragraph (e) of this AD to request approval from the FAA. This approval may address either no action, if the current configuration eliminates the unsafe condition; or different actions necessary to address the unsafe condition described in this AD. Such a request should include an assessment of the effect of the changed configuration on the unsafe condition addressed by this AD. In no case does the presence of any modification, alteration, or repair remove any airplane from the applicability of this AD.

Compliance: Required as indicated, unless accomplished previously.

To prevent collapse of the NLG due to cracking of the hinge pins, accomplish the following:

(a) Perform a dye penetrant inspection to detect cracking in the hinge pins of the NLG in accordance with Avions de Transport Regional Service Bulletin ATR72–32–1021, dated January 17, 1994, at the time specified in either paragraph (a)(1) or (a)(2) or this AD, as applicable.

(1) For airplanes that have accumulated 10,000 total landings or more as of the effective date of this AD: Within 1,000 landings after the effective date of this AD.

(2) For airplanes that have accumulated less than 10,000 total landings as of the effective date of this AD: Within 1,500 landings after the effective date of this AD.

(b) If no cracking is found, prior to further flight, reinstall that hinge pin in accordance with Avions de Transport Regional Service Bulletin ATR72–32–1021, dated January 17, 1994.

(c) If cracking is found, prior to further flight, install a new hinge pin or a pin that has been previously inspected and found to be crack-free, in accordance with the Avions de Transport Regional Service Bulletin ATR72–32–1021, dated January 17, 1994.

(d) As of the effective date of this AD, no hinge pin manufactured by Nardi having part number D56867 and any serial number beginning with the letter ''N,'' shall be installed on the NLG of any airplane, unless that pin has been previously inspected and has been found to be crack-free, in accordance Avions de Transport Regional Service Bulletin ATR72–32–1021, dated January 17, 1994.

(e) An alternative method of compliance or adjustment of the compliance time that provides an acceptable level of safety may be used if approved by the Manager, Standardization Branch, ANM–113, FAA, Transport Airplane Directorate. Operators shall submit their requests through an appropriate FAA Principal Maintenance Inspector, who may add comments and then send it to the Manager, Standardization Branch, ANM–113.

Note 2: Information concerning the existence of approved alternative methods of compliance with this AD, if any, may be obtained from the Standardization Branch, ANM–113.

(f) Special flight permits may be issued in accordance with sections 21.197 and 21.199 of the Federal Aviation Regulations (14 CFR 21.197 and 21.199) to operate the airplane to a location where the requirements of this AD can be accomplished.

(g) The inspection and installations shall be done in accordance with Avions de Transport Regional Service Bulletin ATR72–32–1021, dated January 17, 1994. This incorporation by reference was approved by the Director of the Federal Register in accordance with 5 U.S.C. 552(a) and 1 CFR part 51. Copies may be obtained from Aerospatiale, 316 Route de Bayonne, 31060 Toulouse, Cedex 03, France. Copies may be inspected at the FAA, Transport Airplane Directorate, 1601 Lind Avenue, SW., Renton, Washington; or at the Office of the Federal Register, 800 North Capitol Street, NW., suite 700, Washington, DC.

(h) This amendment becomes effective on August 18, 1995.

Issued in Renton, Washington, on June 26, 1995.

James V. Devany,

Acting Manager, Transport Airplane Directorate, Aircraft Certification Service.

[FR Doc. 95–16126 Filed 7–18–95; 8:45 am]

BILLING CODE 4910–13–V

---

14 CFR Part 39

[Docket No. 94–CE–31–AD; Amendment 39–9294; AD 95–14–02]

Airworthiness Directives; Beech Aircraft Corporation Models 1900, 1900C, and 1900D Airplanes

AGENCY: Federal Aviation Administration, DOT.

ACTION: Final rule.

SUMMARY: This amendment supersedes Airworthiness Directive (AD) 91–24–15, which currently requires modifying the instrument air plumbing system on Beech Aircraft Corporation (Beech) Models 1900 and 1900C airplanes. This action requires an additional modification to the plumbing of the instrument air system on the Models 1900 and 1900C airplanes, and adds the Model 1900D airplanes to the applicability. Eight reports of moisture freezing in this system on airplanes with the modification required by AD 91–24–15 incorporated prompted this action. In addition, recent testing on the Model 1900D indicates that the design of the instrument air system on these airplanes is also conducive to moisture freeze-ups. The actions specified by this AD are intended to prevent ice formation in the plumbing of the instrument air system, which, if not detected and corrected, could result in aerodynamic problems and subsequent loss of control of the airplane.

DATES: Effective August 31, 1995.

The incorporation by reference of certain publications listed in the regulations is approved by the Director of the Federal Register as of August 31, 1995.

ADDRESSES: Service information that applies to this AD may be obtained from Beech Aircraft Corporation, P.O. Box 85,

Wichita, Kansas 67201–0085. This information may also be examined at the Federal Aviation Administration (FAA), Central Region, Office of the Assistant Chief Counsel, Attention: Rules Docket 94–CE–31–AD, Room 1558, 601 E. 12th Street, Kansas City, Missouri 64106; or at the Office of the Federal Register, 800 North Capitol Street, NW., suite 700, Washington, DC.

FOR FURTHER INFORMATION CONTACT: Mr. Harvey E. Nero, Aerospace Engineer, Wichita Aircraft Certification Office, FAA, 1801 Airport Road, Mid-Continent Airport, Wichita, Kansas 67209; telephone (316) 946–4137; facsimile (316) 946–4407.

SUPPLEMENTARY INFORMATION: A proposal to amend part 39 of the Federal Aviation Regulations (14 CFR part 39) to include an AD that would apply to certain Beech Models 1900, 1900C, and 1900D airplanes was published in the **Federal Register** on February 10, 1995 (60 FR 7919). The action proposed to supersede AD 91–24–15, Amendment 39–8173, with a new AD that would require modifying the plumbing of the instrument air system. Accomplishment of the proposed action would in accordance with the instructions provided with the following kits, as applicable:

Models	Kit No.
1900 and 1900C	118–9003–1 or 118–9003–3.
1900D	129–9010–1 or 129–9010–3.

Interested persons have been afforded an opportunity to participate in the making of this amendment. Due consideration has been given to the one comment received on the proposal.

The commenter states that no benefit would be derived by issuing the AD and that the action is for the sake of change making general aviation more costly and burdensome without any significant safety improvements. The FAA does not concur. As specified in the proposal, the FAA has received eight reports of moisture freezing in the plumbing of the instrument air system on Models 1900 and 1900C airplanes, and recent testing on the Beech Model 1900D indicates that the design of the instrument air systems on these airplanes is also conducive to moisture freeze-ups. The FAA has determined that installation of the applicable kit on an affected airplane will maintain the air temperatures in the instrument air system at 50 degrees or higher, and help eliminate the possibility of moisture freezing in this system in cold humid environments. The AD is unchanged as a result of the comment.

After careful review of all available information related to this issue including the comment presented above, the FAA has determined that air safety and the public interest require the adoption of the rule as proposed except for minor editorial corrections. The FAA has determined that these minor corrections will not change the meaning of the AD and will not add any additional burden upon the public than was already proposed.

The FAA estimates that 370 airplanes in the U.S. registry will be affected by this AD, that it will take approximately 30 workhours per airplane to accomplish the required action, and that the average labor rate is approximately $60 an hour. Parts cost approximately $505 to $2,261 depending on the airplane model. Based on these figures (using a $2,261 part cost for all affected airplanes), the total cost impact of the AD on U.S. operators is estimated to be $1,502,570. This figure is based upon the assumption that no affected airplane owner/operator has accomplished the required modification.

Beech will provide parts free of charge until December 31, 1995. If all owners/operators incorporate this modification by that date, then the cost impact of this AD upon the public would be reduced by $836,570 (370 airplanes × $2,261) from $1,502,570 to $666,000.

In addition, Beech has informed the FAA that it has distributed approximately 18 kits. Assuming that each of these distributed kits is incorporated on one of the affected airplanes and that each of the remaining airplanes would have one of the kits incorporated by December 31, 1995, the cost of this AD would be further reduced by $32,400 (30 workhours × $60 × 18 airplanes) from $666,000 to $633,600.

The regulations adopted herein will not have substantial direct effects on the States, on the relationship between the national government and the States, or on the distribution of power and responsibilities among the various levels of government. Therefore, in accordance with Executive Order 12612, it is determined that this final rule does not have sufficient federalism implications to warrant the preparation of a Federalism Assessment.

For the reasons discussed above, I certify that this action (1) is not a ''significant regulatory action'' under Executive Order 12866; (2) is not a ''significant rule'' under DOT Regulatory Policies and Procedures (44 FR 11034, February 26, 1979); and (3) will not have a significant economic impact, positive or negative, on a substantial number of small entities under the criteria of the Regulatory Flexibility Act. A copy of the final evaluation prepared for this action is contained in the Rules Docket. A copy of it may be obtained by contacting the Rules Docket at the location provided under the caption **ADDRESSES**.

List of Subjects in 14 CFR Part 39

Air transportation, Aircraft, Aviation safety, Incorporation by reference, Safety.

Adoption of the Amendment

Accordingly, pursuant to the authority delegated to me by the Administrator, the Federal Aviation Administration amends part 39 of the Federal Aviation Regulations (14 CFR part 39) as follows:

PART 39—AIRWORTHINESS DIRECTIVES

1. The authority citation for part 39 continues to read as follows:

Authority: 49 U.S.C. App. 1354(a), 1421 and 1423; 49 U.S.C. 106(g); and 14 CFR 11.89.

§ 39.13 [Amended]

2. Section 39.13 is amended by removing AD 91–24–15, Amendment 39–8173, and adding a new AD to read as follows:

95–14–02 Beech Aircraft Corporation: Amendment 39–9294; Docket No. 94–CE–31–AD. Supersedes AD 91–24–15, Amendment 39–8173.

Applicability: The following airplane models and serial numbers, certificated in any category:

Model	Serial Nos.
1900	UA–2 and UA–3.
1900C	UB–1 through UB–74 and UC–1 through UC–174.
1900C (C12J) ...	UD–1 through UD–6.
1900D	UE–2 through UE–115.

Note 1: This AD applies to each airplane identified in the preceding applicability provision, regardless of whether it has been modified, altered, or repaired in the area subject to the requirements of this AD. For airplanes that have been modified, altered, or repaired so that the performance of the requirements of this AD is affected, the owner/operator must use the authority provided in paragraph (c) of this AD to request approval from the FAA. This approval may address either no action, if the current configuration eliminates the unsafe condition, or different actions necessary to address the unsafe condition described in this AD. Such a request should include an assessment of the effect of the changed configuration on the unsafe condition

addressed by this AD. In no case does the presence of any modification, alteration, or repair remove any airplane from the applicability of this AD.

Compliance: Required within the next 1,000 hours time-in-service after the effective date of this AD, unless already accomplished.

To prevent ice formation in the plumbing of the instrument air system, which, if not detected and corrected, could result in aerodynamic problems and subsequent loss of control of the airplane, accomplish the following:

(a) Modify the plumbing of the instrument air system in accordance with the instructions provided with the following kits, as applicable:

Models	Kit No.
1900 and 1900C	118–9003–1 or 118–9003–3.
1900D	129–9010–1 or 129–9010–3.

Note 2: Beech Service Bulletin (SB) No. 2539 and Beech SB No. 2591, both dated December 1994, reference the kits specified above.

Note 3: Beech will provide parts free of charge to the owner/operator until December 31, 1995.

(b) Special flight permits may be issued in accordance with sections 21.197 and 21.199 of the Federal Aviation Regulations (14 CFR 21.197 and 21.199) to operate the airplane to a location where the requirements of this AD can be accomplished.

(c) An alternative method of compliance or adjustment of the compliance time that provides an equivalent level of safety may be approved by the Manager, Wichita Aircraft Certification Office (ACO), 1801 Airport Road, Room 100, Mid-Continent Airport, Wichita, Kansas 67209. The request shall be forwarded through an appropriate FAA Maintenance Inspector, who may add comments and then send it to the Manager, Wichita ACO.

Note 4: Information concerning the existence of approved alternative methods of compliance with this AD, if any, may be obtained from the Wichita ACO.

(d) The modifications required by this AD shall be done in accordance with the instructions provided with either Beech Kit No. 118–9003–1, No. 118–9003–3, No. 129–9010–1 or 129–9010–3, as applicable, and as specified in Beech Service Bulletin No. 2539 and Beech Service Bulletin No. 2591, both dated December 1994. This incorporation be reference was approved by the Director of the Federal Register in accordance with 5 U.S.C. 552(a) and 1 CFR part 51. Copies may be obtained from the Beech Aircraft Corporation, P.O. Box 85, Wichita, Kansas 67201–0085. Copies may be inspected at the FAA, Central Region, Office of the Assistant Chief Counsel, Room 1558, 601 E. 12th Street, Kansas City, Missouri, or at the Office of the Federal Register, 800 North Capitol Street, NW., 7th Floor, suite 700, Washington, DC.

(e) This amendment (39–9294) supersedes AD 91–24–15, Amendment 39–8173.

(f) This amendment (39–9294) becomes effective on August 31, 1995.

Issued in Kansas City, Missouri, on June 22, 1995.

Gerald W. Pierce,

Acting Manager, Small Airplane Directorate, Aircraft Certification Service.

[FR Doc. 95–17674 Filed 7–18–95; 8:45 am]

BILLING CODE 4910–13–U

14 CFR Part 39

[Docket No. 93–NM–122–AD; Amendment 39–9314; AD 94–21–05 R1]

Airworthiness Directives; Boeing Model 737–300, –400, and –500 Series Airplanes Equipped With CFM International CFM56–3 Series Engines

AGENCY: Federal Aviation Administration, DOT.

ACTION: Final rule; correction.

SUMMARY: This amendment clarifies an existing airworthiness directive (AD), applicable to certain Boeing Model 737–300, –400, and –500 series airplanes, that currently requires modification, adjustments, and tests of the thrust reverser system; and repair, if necessary. This amendment clarifies a requirement specified in the AD concerning the performance of the operational test of the system. This amendment is prompted by an inquiry from an operator of the affected airplanes concerning that aspect of the existing AD.

DATES: Effective November 25, 1994.

The incorporation by reference of certain publications listed in the regulations was approved by the Director of the Federal Register as of November 25, 1994 (59 FR 53573, October 25, 1994).

ADDRESSES: The service information referenced in this AD may be obtained from Boeing Commercial Airplane Group, P.O. Box 3707, Seattle, Washington 98124–2207. This information may be examined at the FAA, Transport Airplane Directorate, 1601 Lind Avenue SW., Renton, Washington; or at the Office of the Federal Register, 800 North Capitol Street NW., suite 700, Washington, DC.

FOR FURTHER INFORMATION CONTACT: Stephen Bray, Aerospace Engineer, Propulsion Branch, ANM–140S, FAA, Seattle Aircraft Certification Office, 1601 Lind Avenue, SW., Renton, Washington; telephone (206) 227–2681; fax (206) 227–1181.

SUPPLEMENTARY INFORMATION: On October 6, 1994, the FAA issued AD 94–21–05, amendment 39–9047 (59 FR 53573, October 25, 1994), applicable to certain Boeing Model 737–300, –400, and –500 series airplanes, to require modification, adjustments, and tests of the thrust reverser system; and repair, if necessary. The actions required by that AD are intended to prevent deployment of a thrust reverser in flight and subsequent reduced controllability of the airplane.

Since the issuance of that AD, the FAA has received an inquiry from an operator of the affected airplanes concerning the requirement of paragraph (d)(2) of the AD. That paragraph requires deactivation of a thrust reverser if a discrepancy is found during accomplishment of the thrust reverser sync-lock integrity test. The last sentence of paragraph (d)(2) specifies that, following deactivation of the associated thrust reverser, ''the sync-locks installed on the deactivated thrust reverser must remain operational.'' The operator questions how the sync-lock can remain ''operational'' when the thrust reverser has been deactivated for failing the required integrity test.

The FAA finds that clarification of the term ''operational'' is necessary. The FAA's intent in specifying that the sync-lock remain operational was actually to require that it be verified to be in the locked position. In order to avoid unnecessary flight delays and cancellations, the FAA included the provision contained in paragraph (d)(2) of AD 94–21–05 to provide relief to allow dispatch of the airplane with deactivated sync-locks, in accordance with provisions and limitations contained in the Master Minimum Equipment List (MMEL). This relief involves locking out a thrust reverser and verifying that the failed sync-lock is deactivated and in the locked position. In light of this, action is taken herein to revise AD 94–21–05 to clarify paragraph (d)(2) of the AD accordingly. There are no other changes to the rule.

The final rule is being reprinted in its entirety for the convenience of affected operators. The effective date remains November 25, 1994.

Since this action only clarifies a requirement of a final rule, it has no adverse economic impact and imposes no additional burden on any person. Therefore, notice and public procedures hereon are unnecessary.

List of Subjects in 14 CFR Part 39

Air transportation, Aircraft, Aviation safety, Incorporation by reference, Safety.

Adoption of the Amendment

Accordingly, pursuant to the authority delegated to me by the Administrator, the Federal Aviation

Administration amends part 39 of the Federal Aviation Regulations (14 CFR part 39) as follows:

PART 39—AIRWORTHINESS DIRECTIVES

1. The authority citation for part 39 continues to read as follows:

Authority: 49 U.S.C. App. 1354(a), 1421 and 1423; 49 U.S.C. 106(g); and 14 CFR 11.89.

§ 39.13 [Amended]

2. Section 39.13 is amended by removing amendment 39–9047 (59 FR 53573, October 25, 1994), and by adding a new airworthiness directive (AD), amendment 39–9314, to read as follows:

94–21–05 R1 Boeing: Amendment 39–9314. Docket 93–NM–122–AD. Revises AD 94–21–05, Amendment 39–9047.

Applicability: Model 737–300, –400, and –500 series airplanes equipped with CFM International CFM56–3 series engines, certificated in any category.

Compliance: Required as indicated, unless accomplished previously.

To prevent deployment of a thrust reverser in flight and subsequent reduced controllability of the airplane, accomplish the following:

(a) For airplanes on which the sync-lock installation [specified in paragraph (b) of this AD], sync-lock wiring modification [specified in paragraph (c) of this AD], or Production Revision Record (PRR) 35105 has not been accomplished: Within 60 days after the effective date of this AD, and thereafter at intervals not to exceed 4,000 hours time-in-service, perform adjustments and tests of the thrust reverser system that are specified in Section 78–31–00 of the Boeing 737 Maintenance Manual to verify proper operation of the thrust reverser system, in accordance with that section of the maintenance manual. If any discrepancy is found, prior to further flight, accomplish either paragraph (a)(1) or (a)(2) of this AD.

(1) Repair any discrepancy found, in accordance with procedures described in the Boeing 737 Maintenance Manual. Or

(2) Deactivate the associated thrust reverser in accordance with the existing provisions and limitations specified in the Master Minimum Equipment List (MMEL).

(b) For airplanes on which the sync-lock feature was not installed during production or as a modification in accordance with Boeing Service Bulletin 737–78–1053, dated December 17, 1992: Within 5 years after the effective date of this AD, install an additional thrust reverser system locking feature (sync-lock installation) in accordance with Boeing Service Bulletin 737–78–1053, Revision 1, dated July 1, 1993; Revision 2, dated February 17, 1994; or Revision 3, dated June 30, 1994. Installation of the additional locking feature constitutes terminating action for the tests required by paragraph (a) of this AD.

(c) For airplanes listed in Boeing Service Bulletin 737–78–1058, dated July 1, 1993: Within 5 years after the effective date of this AD, modify the sync-lock wiring in accordance with Boeing Service Bulletin 737–78–1058, dated July 1, 1993; Revision 1, dated February 17, 1994; or Revision 2, dated July 7, 1994. Modification of the sync-lock wiring constitutes terminating action for the tests required by paragraph (a) of this AD.

(d) At the times specified in paragraph (e) of this AD, accomplish the ''Thrust Reverser Sync-Lock Integrity Test'' specified below to verify that the sync-locks are not failing in the unlocked state. If any discrepancy is found, prior to further flight, accomplish paragraph (d)(1) or (d)(2) of this AD.

(1) Repair any discrepancy found, in accordance with procedures specified in the Boeing 737 Maintenance Manual. Or

(2) Deactivate the associated thrust reverser in accordance with the existing provisions and limitations specified in the MMEL; and verify that the failed sync-lock is deactivated and in the locked position.

''THRUST REVERSER SYNC-LOCK INTEGRITY TEST

1. General

A. Use this procedure to test the integrity of the thrust reverser sync-locks.
The procedure must be performed on each engine.

2. Thrust Reverser Sync-Lock Test

A. Prepare for the Thrust Reverser Sync-Lock test.
(1) Do the steps that follow to supply power to the thrust reverser system:
(a) Make sure the thrust levers are in the idle position.
(b) Make sure the thrust reversers are retracted and locked.
(c) Make sure these circuit breakers on the P6 circuit breaker panel are closed:
(1) ENGINE 1 THRUST REVERSER CONT SYS
(2) ENGINE 2 THRUST REVERSER CONT SYS
(3) ENGINE 2 THRUST REVERSER CONT SYS-ALT
(4) ENGINE 1 THRUST REVERSER IND SYS
(5) ENGINE 2 THRUST REVERSER IND SYS
(6) ENGINE 1 SYNC-LOCK
(7) ENGINE 2 SYNC-LOCK
(8) ENGINE 2 SYNC-LOCK-ALTN
(9) LANDING GEAR AIR/GND RELAY AND LIGHTS
(10) RADIO ALTM–2
(d) Make sure this circuit breaker on the P18 circuit breaker panel is closed:
(1) RADIO ALTM–1
(e) Supply electrical power.
(f) Remove pressure from the A (for the left engine) or B (for the right engine) hydraulic system.

B. Do the thrust reverser sync-lock test.
(1) Move and hold the manual unlock lever on the upper actuator on both thrust reverser sleeves to the unlock position.
(2) Make sure the thrust reverser sleeves did not move aft.
(3) Move the left (right) reverse thrust lever up and rearward to the reverse thrust position.
(4) Make sure both thrust reverser sleeves move aft (approximately 0.15 to 0.25 inch).
(5) Release the manual unlock lever on the upper actuators.

WARNING: MAKE SURE ALL PERSONS AND EQUIPMENT ARE CLEAR OF THE AREA AROUND THE THRUST REVERSER. WHEN YOU APPLY HYDRAULIC PRESSURE, THE THRUST REVERSER WILL EXTEND AND CAN CAUSE INJURIES TO PERSONS OR DAMAGE TO EQUIPMENT.

(6) Pressurize the A (B) hydraulic system.
(7) Make sure the thrust reverser extends.
(8) Move the left (right) reverse thrust lever to the forward and down position to retract the thrust reverser.

C. Put the airplane back to its usual condition.
(1) Remove hydraulic pressure.
(2) Remove electrical power.

D. Repeat the thrust reverser sync-lock test on the other engine.''

(e) Accomplish the test required by paragraph (d) of this AD at the times specified in paragraph (e)(1) or (e)(2) of this AD, as applicable.

(1) For airplanes that are subject to the requirements of paragraphs (b) and (c) of this AD: Within 4,000 hours time-in-service after accomplishing the modification required by paragraph (b) or (c) of this AD, as applicable, or within 4,000 hours time-in-service after the effective date of this AD, whichever occurs later; and thereafter at intervals not to exceed 4,000 hours time-in-service.

(2) For all other airplanes: Within 4,000 total hours time-in-service, or within 4,000 hours time-in-service after the effective date of this AD, whichever occurs later; and thereafter at intervals not to exceed 4,000 hours time-in-service.

(f) An alternative method of compliance or adjustment of the compliance time that provides an acceptable level of safety may be used if approved by the Manager, Seattle Aircraft Certification Office (ACO), FAA, Transport Airplane Directorate. Operators shall submit their requests through an appropriate FAA Principal Maintenance Inspector, who may add comments and then send it to the Manager, Seattle ACO.

Note: Information concerning the existence of approved alternative methods of compliance with this AD, if any, may be obtained from the Seattle ACO.

(g) Special flight permits may be issued in accordance with sections 21.197 and 21.199 of the Federal Aviation Regulations (14 CFR 21.197 and 21.199) to operate the airplane to a location where the requirements of this AD can be accomplished.

(h) The installation and wiring modification shall be done in accordance with Boeing Service Bulletin 737–78–1053, Revision 1, dated July 1, 1993; Boeing Service Bulletin 737–78–1053, Revision 2, dated February 17, 1994; Boeing Service Bulletin 737–78–1053, Revision 3, dated June 30, 1994; Boeing Service Bulletin 737–78–1058, dated July 1, 1993; Boeing Service Bulletin 737–78–1058, Revision 1, dated February 17, 1994; or Boeing Service Bulletin 737–78–1058, Revision 2, dated July 7, 1994. The incorporation by reference of this document was approved by the Director of the Federal Register in accordance with 5 U.S.C. 552(a) and 1 CFR part 51 as of November 25, 1994 (59 FR 53573, October

25, 1994). Copies may be obtained from Boeing Commercial Airplane Group, P.O. Box 3707, Seattle, Washington 98124–2207. Copies may be inspected at the FAA, Transport Airplane Directorate, 1601 Lind Avenue SW., Renton, Washington; or at the Office of the Federal Register, 800 North Capitol Street NW., suite 700, Washington, DC.

(i) This amendment is effective on November 25, 1994.

Issued in Renton, Washington, on July 13, 1995.

James V. Devany,

Acting Manager, Transport Airplane Directorate, Aircraft Certification Service.

[FR Doc. 95–17709 Filed 7–18–95; 8:45 am]

BILLING CODE 4910–13–U

---

14 CFR Part 39

[Docket No. 94–NM–28–AD; Amendment 39–9292; AD 95–13–12]

Airworthiness Directives; Boeing Model 767 Series Airplanes Equipped With General Electric CF6–80C2 Series Engines

AGENCY: Federal Aviation Administration, DOT.

ACTION: Final rule.

SUMMARY: This amendment supersedes an existing airworthiness directive (AD), applicable to certain Boeing Model 767 series airplanes, that currently requires tests, inspections, and adjustments of the thrust reverser system. This amendment adds requirements for installation of a terminating modification, and repetitive operational checks of the electro-mechanical brake and the cone brake of the center drive unit following accomplishment of the modification. This amendment also removes airplanes equipped with Rolls-Royce RB211–524 series engines from the applicability of the existing AD. This amendment is prompted by the identification of a modification that ensures that the level of safety inherent in the original type design of the thrust reverser system is further enhanced. The actions specified by this AD are intended to prevent possible discrepancies that exist in the current thrust reverser control system, which could result in inadvertent deployment of a thrust reverser during flight.

DATES: Effective August 18, 1995.

The incorporation by reference of certain publications, as listed in the regulations, is approved by the Director of the Federal Register as of August 18, 1995.

The incorporation by reference of Boeing Service Bulletin 767–78–0047, dated August 22, 1991, as listed in the regulations, was approved previously by the Director of the Federal Register as of October 15, 1991 (56 FR 51638, October 15, 1991).

ADDRESSES: The service information referenced in this AD may be obtained from Boeing Commercial Airplane Group, P.O. Box 3707, Seattle, Washington 98124–2207. This information may be examined at the Federal Aviation Administration (FAA), Transport Airplane Directorate, Rules Docket, 1601 Lind Avenue, SW., Renton, Washington; or at the Office of the Federal Register, 800 North Capitol Street, NW., suite 700, Washington, DC.

FOR FURTHER INFORMATION CONTACT: Lanny Pinkstaff, Aerospace Engineer, Propulsion Branch, ANM–140S, FAA, Transport Airplane Directorate, Seattle Aircraft Certification Office, 1601 Lind Avenue, SW., Renton, Washington 98055–4056; telephone (206) 227–2684; fax (206) 227–1181.

SUPPLEMENTARY INFORMATION: A proposal to amend part 39 of the Federal Aviation Regulations (14 CFR part 39) by superseding AD 91–22–02, amendment 39–8062 (56 FR 51638, October 15, 1991), which is applicable to Boeing Model 767 series airplanes equipped with General Electric CF6–80C2 series engines, was published in the **Federal Register** on January 6, 1995 (60 FR 2036). The action proposed to require tests, inspections, and adjustments of the thrust reverser system; installation of a terminating modification; and repetitive operational checks of the electro-mechanical brake and the cone brake of the center drive unit following accomplishment of the modification. The action also proposed to remove airplanes equipped with Rolls-Royce RB211–524 series engines from the applicability of the existing AD.

Interested persons have been afforded an opportunity to participate in the making of this amendment. Due consideration has been given to the comments received.

One commenter supports the proposed rule.

One commenter requests that the proposed compliance time for installation of the terminating modification be extended from 3 to 5 years to be consistent with similar rules that are applicable to Boeing Model 767–200 and 757 series airplanes. The FAA does not concur with the commenter's request to extend the compliance time. In developing an appropriate compliance time for installation of the terminating modification on the affected airplanes, the FAA considered operator fleet sizes, as well as availability of parts. The commenter is one of two U.S. operators of the affected airplanes. In its comments to the proposed rule, this commenter indicates that the 3-year compliance time presents no problem. The other U.S. operator of these airplanes indicates that it has already modified its entire fleet. Further, the manufacturer has advised that an ample number of required parts will be available for modification of the U.S. fleet within the proposed compliance period. Based on this information, the FAA finds that a compliance time of 3 years would not impose any undue economic burden on any operator. However, the FAA would consider a request for an adjustment of the compliance time, in accordance with the provisions of paragraph (f) of this AD, provided that adequate justification is presented to support such a request.

One commenter requests that the work hour estimate specified in the proposal for installation of the terminating modification be increased from 786 to 880 work hours. Based on its experience, the commenter states that 880 work hours represents the actual time required for accomplishment of the terminating modification. The FAA does not concur with the commenter's request to increase the work hour estimate. The appropriate number of work hours necessary to accomplish the required modification, specified as 786 in the economic impact information, below, was provided to the FAA by the manufacturer based on the best data available to date. That estimate represents the time for direct labor only and is based on the assumption that the modification will be performed by an experienced maintenance crew. However, in light of crew experience, some variability in the estimated number of work hours is likely to exist from operator to operator.

One commenter indicates that a re-identification table provided in Revision 3 of General Electric Service Bulletin 78–135 contains numerous part number errors that should be corrected before a final rule is issued. (The General Electric service bulletin is referenced in ''NOTE 2'' of the proposal as an additional source of service information for installation of the terminating modification.) The FAA infers from the commenter's statement that it requests that issuance of the final rule be delayed until General Electric releases a revised service bulletin containing correct part numbers. The FAA does not concur. The FAA has been unable to confirm the future date of issuance of Revision 4 of the General Electric service bulletin. In

light of the degree of urgency associated with the unsafe condition addressed by this AD, and since the General Electric service bulletin is only a secondary reference, the FAA does not consider that delaying this action until after the release of a revised service bulletin is warranted. Further, paragraph (f) of the final rule provides affected operators the opportunity to request an alternative method of compliance or adjustment of the compliance time if data are presented to justify such a request.

The FAA has been advised that the terminating modification required by this AD has been accomplished on certain U.S.-registered airplanes. The economic impact information, below, has been revised accordingly.

After careful review of the available data, including the comments noted above, the FAA has determined that air safety and the public interest require the adoption of the rule as proposed.

There are approximately 135 Boeing Model 767 series airplanes equipped with General Electric CF6–80C2 series engines in the worldwide fleet. The FAA estimates that 39 airplanes of U.S. registry will be affected by this AD.

The tests, inspections, and adjustments that were required previously by AD 91–22–02, and retained in this AD, take approximately 30 work hours per airplane to accomplish, at an average labor rate of $60 per work hour. Based on these figures, the total cost impact on U.S. operators of the currently required tests, inspections, and adjustments that are retained in this AD is estimated to be $70,200, or $1,800 per airplane, per inspection cycle.

The terminating modification required by this AD will take approximately 786 work hours per airplane to accomplish, at an average labor rate of $60 per work hour. Required parts will be provided by the manufacturer at no cost to the operator. The repetitive operational checks required by this AD will take approximately 2 work hours per airplane to accomplish, at an average labor rate of $60 per work hour. Based on these figures, the total cost impact on U.S. operators of the terminating modification and repetitive operational checks required by this AD is estimated to be $1,843,920, or $47,280 per airplane.

The FAA has been advised that the terminating modification has been accomplished in accordance with the requirements of this AD on 11 U.S.-registered airplanes. Therefore, the future economic cost impact of this rule on U.S. operators is now only $1,325,160.

The number of required work hours for each requirement of this AD, as indicated above, is presented as if the accomplishment of the actions were to be conducted as ''stand alone'' actions. However, in actual practice, these actions for the most part will be accomplished coincidentally or in combination with normally scheduled airplane inspections and other maintenance program tasks. Therefore, the actual number of necessary additional work hours will be minimal in many instances. Additionally, any costs associated with special airplane scheduling will be minimal.

The FAA recognizes that the required modification would necessitate a large number of work hours to accomplish. However, the 3-year compliance time specified in paragraph (c) of this AD should allow ample time for terminating modification to be accomplished coincidentally with scheduled major airplane inspection and maintenance activities, thereby minimizing the costs associated with special airplane scheduling. Regulatory Impact

The regulations adopted herein will not have substantial direct effects on the States, on the relationship between the national government and the States, or on the distribution of power and responsibilities among the various levels of government. Therefore, in accordance with Executive Order 12612, it is determined that this final rule does not have sufficient federalism implications to warrant the preparation of a Federalism Assessment.

For the reasons discussed above, I certify that this action (1) is not a ''significant regulatory action'' under Executive Order 12866; (2) is not a ''significant rule'' under DOT Regulatory Policies and Procedures (44 FR 11034, February 26, 1979); and (3) will not have a significant economic impact, positive or negative, on a substantial number of small entities under the criteria of the Regulatory Flexibility Act. A final evaluation has been prepared for this action and it is contained in the Rules Docket. A copy of it may be obtained from the Rules Docket at the location provided under the caption **ADDRESSES.**

List of Subjects in 14 CFR Part 39

Air transportation, Aircraft, Aviation safety, Incorporation by reference, Safety.

Adoption of the Amendment

Accordingly, pursuant to the authority delegated to me by the Administrator, the Federal Aviation Administration amends part 39 of the Federal Aviation Regulations (14 CFR part 39) as follows:

PART 39—AIRWORTHINESS DIRECTIVES

1. The authority citation for part 39 continues to read as follows:

Authority: 49 U.S.C. App. 1354(a), 1421 and 1423; 49 U.S.C. 106(g); and 14 CFR 11.89.

§ 39.13 [Amended]

2. Section 39.13 is amended by removing amendment 39–8062 (56 FR 51638, October 15, 1991), and by adding a new airworthiness directive (AD), amendment 39–9292, to read as follows:

95–13–12 Boeing: Amendment 39–9292. Docket 94–NM–28–AD. Supersedes AD 91–22–02, Amendment 39–8062.

Applicability: Model 767 series airplanes equipped with General Electric CF6–80C2 series engines, certificated in any category.

Note 1: This AD applies to each airplane identified in the preceding applicability provision, regardless of whether it has been modified, altered, or repaired in the area subject to the requirements of this AD. For airplanes that have been modified, altered, or repaired so that the performance of the requirements of this AD is affected, the owner/operator must use the authority provided in paragraph (f) of this AD to request approval from the FAA. This approval may address either no action, if the current configuration eliminates the unsafe condition; or different actions necessary to address the unsafe condition described in this AD. Such a request should include an assessment of the effect of the changed configuration on the unsafe condition addressed by this AD. In no case does the presence of any modification, alteration, or repair remove any airplane from the applicability of this AD.

Compliance: Required as indicated, unless accomplished previously.

To ensure the integrity of the fail-safe features of the thrust reverser system, accomplish the following:

(a) Within 30 days after October 15, 1991 (the effective date of AD 91–22–02, amendment 39–8062), perform tests, inspections, and adjustments of the thrust reverser system in accordance with Boeing Service Bulletin 767–78–0047, dated August 22, 1991; Revision 1, dated March 26, 1992; Revision 2, dated January 21, 1993; or Revision 3, dated July 28, 1994. After the effective date of this AD, those actions shall be accomplished only in accordance with Revision 3 of the service bulletin.

(1) Except as provided by paragraph (a)(2) of this AD, repeat all tests and inspections thereafter at intervals not to exceed 3,000 flight hours until the modification required by paragraph (c) of this AD is accomplished.

(2) Repeat the check of the grounding wire for the Directional Pilot Valve (DPV) of the thrust reverser in accordance with the service bulletin at intervals not to exceed 1,500 flight hours, and whenever maintenance action is taken that would disturb the DPV grounding

circuit, until the modification required by paragraph (c) of this AD is accomplished.

(b) If any of the tests and/or inspections required by paragraph (a) of this AD cannot be successfully performed, or if those tests and/or inspections result in findings that are unacceptable in accordance with Boeing Service Bulletin 767–78–0047, dated August 22, 1991; Revision 1, dated March 26, 1992; Revision 2, dated January 21, 1993; or Revision 3, dated July 28, 1994; accomplish paragraphs (b)(1) and (b)(2) of this AD. After the effective date of this AD, the actions required by paragraphs (b)(1) and (b)(2) shall be accomplished only in accordance with Revision 3 of the service bulletin.

(1) Prior to further flight, deactivate the associated thrust reverser in accordance with Section 78–31–1 of Boeing Document D630T002, ''Boeing 767 Dispatch Deviation Guide,'' Revision 9, dated May 1, 1991; or Revision 10, dated September 1, 1992. After the effective date of this AD, this action shall be accomplished only in accordance with Revision 10 of the Boeing document. No more than one reverser on any airplane may be deactivated under the provisions of this paragraph.

(2) Within 10 days after deactivation of any thrust reverser in accordance with this paragraph, the thrust reverser must be repaired in accordance with Boeing Service Bulletin 767–78–0047, dated August 22, 1991; Revision 1, dated March 26, 1992; Revision 2, dated January 21, 1993; or Revision 3, dated July 28, 1994. After the effective date of this AD, the repair shall be accomplished only in accordance with Revision 3 of the service bulletin. Additionally, the tests and/or inspections required by paragraph (a) of this AD must be successfully accomplished; once this is accomplished, the thrust reverser must then be reactivated.

(c) Within 3 years after the effective date of this AD, install a third locking system on the left- and right-hand engine thrust reversers in accordance with Boeing Service Bulletin 767–78–0063, Revision 2, dated April 28, 1994.

Note 2: The Boeing service bulletin references General Electric Service Bulletin 78–135 as an additional source of service information for accomplishment of the third locking system on the thrust reversers. However, the Boeing service bulletin does not specify the appropriate revision level for the General Electric service bulletin. The appropriate revision level for the General Electric service bulletin to be used in conjunction with the Boeing service bulletin is Revision 3, dated August 2, 1994.

(d) Within 4,000 flight hours after accomplishing the modification required by paragraph (c) of this AD, or within 4,000 flight hours after the effective date of this AD, whichever occurs later; and thereafter at intervals not to exceed 4,000 flight hours; perform operational checks of the electro-mechanical brake and the cone brake of the center drive unit in accordance with Appendix 1 (including Figure 1) of this AD.

(e) Accomplishment of the modification and periodic operational checks required by paragraphs (c) and (d) of this AD constitutes terminating action for the tests, inspections, and adjustments required by paragraph (a) of this AD.

(f) An alternative method of compliance or adjustment of the compliance time that provides an acceptable level of safety may be used if approved by the Manager, Seattle Aircraft Certification Office (ACO), FAA, Transport Airplane Directorate. Operators shall submit their requests through an appropriate FAA Principal Maintenance Inspector, who may add comments and then send it to the Manager, Seattle ACO.

Note 3: Information concerning the existence of approved alternative methods of compliance with this AD, if any, may be obtained from the Seattle ACO.

(g) Special flight permits may be issued in accordance with sections 21.197 and 21.199 of the Federal Aviation Regulations (14 CFR 21.197 and 21.199) to operate the airplane to a location where the requirements of this AD can be accomplished.

(h) Certain actions shall be done in accordance with the following Boeing service bulletins, which contain the specified effective pages:

Service bulletin referenced and date	Page No.	Revision level shown on page	Date shown on page
767–78–0047, Revision 1, March 26, 1992	1–33	1	March 26, 1992.
767–78–0047, Revision 2, January 21, 1993	1–2, 4, 12–13, 20–32	2	January 21, 1993.
	3, 5, 10–11, 14–15, 17–19	1	March 26, 1992.
	6–9, 16	Original	August 22, 1991.
767–78–0047, Revision 3, July 28, 1994.	1–32	3	July 28, 1994.
767–78–0063, Revision 2, April 28, 1994.	1–292	2	April 28, 1994.

This incorporation by reference of these documents was approved by the Director of the Federal Register in accordance with 5 U.S.C. 552(a) and 1 CFR part 51. Certain other actions shall be done in accordance with Boeing Service Bulletin 767–78–0047, dated August 22, 1991. The incorporation by reference of this document was approved previously by the Director of the Federal Register in accordance with 5 U.S.C. 552(a) and 1 CFR part 51 as of October 15, 1991 (56 FR 51638, October 15, 1991). Copies may be obtained from Boeing Commercial Airplane Group, P.O. Box 3707, Seattle, Washington 98124–2207. Copies may be inspected at the FAA, Transport Airplane Directorate, 1601 Lind Avenue, SW., Renton, Washington; or at the Office of the Federal Register, 800 North Capitol Street, NW., suite 700, Washington, DC.

(i) This amendment becomes effective on August 18, 1995.

Appendix 1

Thrust Reverser Electro-Mechanical Brake and CDU Cone Brake Test

1. General

A. This procedure contains steps to do two checks:

(1) A check of the holding torque of the electro-mechanical brake

(2) A check of the holding torque of the CDU cone brake.

2. Electro-Mechanical Brake and CDU Cone Brake Torque Check (Fig. 1)

A. Prepare to do the checks:

(1) Open the fan cowl panels.

B. Do a check of the torque of the electro-mechanical brake:

(1) Do a check of the running torque of the thrust reverser system:

(a) Manually extend the thrust reverser six inches and measure the running torque.

(1) Make sure the torque is less than 10 pound-inches.

(2) Do a check of the electro-mechanical brake holding torque:

(a) Make sure the thrust reverser translating cowl is extended at least one inch.

(b) Make sure the CDU lock handle is released.

(c) Pull down on the manual release handle on the electro-mechanical brake until the handle fully engages the retaining clip.

Note: This will lock the electro-mechanical brake.

(d) With the manual drive lockout cover removed from the CDU, install a ¼-inch extension tool and dial-type torque wrench into the drive pad.

Note: You will need a 24-inch extension to provide adequate clearance for the torque wrench.

(e) Apply 90 pound-inches of torque to the system.

(1) The electro-mechanical brake system is working correctly if the torque is reached before you turn the wrench 450 degrees (1-¼ turns).

(2) If the flexshaft turns more than 450 degrees before you reach the specified torque, you must replace the long flexshaft between the CDU and the upper angle gearbox.

(3) If you do not get 90 pound-inches of torque, you must replace the electro-mechanical brake.

(f) Release the torque by turning the wrench in the opposite direction until you read zero pound-inches.

(1) If the wrench does not return to within 30 degrees of initial starting point, you must replace the long flexshaft between the CDU and upper angle gearbox.

(3) Fully retract the thrust reverser.

C. Do a check of the torque of the CDU cone brake:

(1) Pull up on the manual release handle to unlock the electro-mechanical brake.

(2) Pull the manual brake release lever on the CDU to release the cone brake.

Note: This will release the pre-load tension that may occur during a stow cycle.

(3) Return the manual brake release lever to the locked position to engage the cone brake.

(4) Remove the two bolts that hold the lockout plate to the CDU and remove the lockout plate.

(5) Install a ¼-inch drive and a dial-type torque wrench into the CDU drive pad.

Caution: DO NOT USE MORE THAN 130 POUND-INCHES OF TORQUE WHEN YOU DO THIS CHECK. EXCESSIVE TORQUE WILL DAMAGE THE CDU.

(6) Turn the torque wrench to try to manually extend the translating cowl until you get at least 15 pound-inches.

Note: The cone brake prevents movement in the extend direction only. If you try to measure the holding torque in the retract direction, you will get a false reading.

(a) If the torque is less than 15 pound-inches, you must replace the CDU.

D. Return the airplane to its usual condition:

(1) Fully retract the thrust reverser.

(2) Pull down on the manual release handle on the electro-mechanical brake until the handle fully engages the retaining clip.

Note: This will lock the electro-mechanical brake.

(3) Close the fan cowl panels.

BILLING CODE 4910–13–U

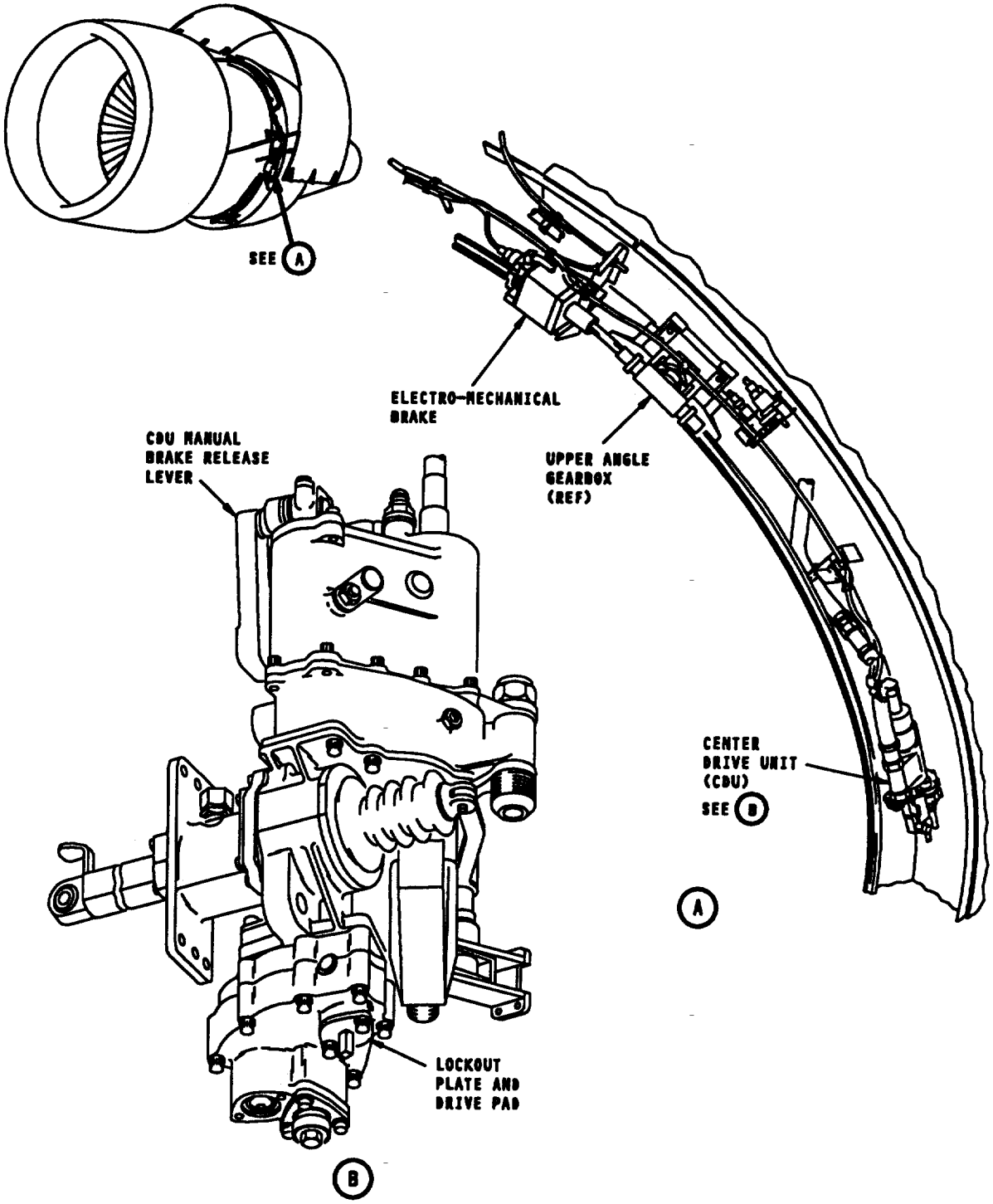

Electro-Mechanical Brake and CDU Cone Brake Torque Check
Figure 1

BILLING CODE 4910–13–C

Issued in Renton, Washington, on June 22, 1995.

James V. Devany,

Acting Manager, Transport Airplane Directorate, Aircraft Certification Service.

[FR Doc. 95–15849 Filed 7–18–95; 8:45 am]

BILLING CODE 4910–13–U

14 CFR Part 39

[Docket No. 94–NM–159–AD; Amendment 39–9268; AD 95–12–17]

Airworthiness Directives; Boeing Model 737–100 and –200 Series Airplanes

AGENCY: Federal Aviation Administration, DOT.

ACTION: Final rule.

SUMMARY: This amendment adopts a new airworthiness directive (AD), applicable to certain Boeing Model 737–100 and –200 series airplanes, that requires various inspections for cracks in the outboard chord of the frame at body station (BS) 727 and in the outboard chord of stringer 18A; and repair or replacement of cracked parts. This amendment is prompted by reports of fatigue cracks in those outboard chords. The actions specified by this AD are intended to prevent such fatigue cracking, which could result in reduced structural integrity of the outboard chords, and subsequent rapid decompression of the airplane.

DATES: Effective August 18, 1995.

The incorporation by reference of certain publications listed in the regulations is approved by the Director of the Federal Register as of August 18, 1995.

ADDRESSES: The service information referenced in this AD may be obtained from Boeing Commercial Airplane Group, P.O. Box 3707, Seattle, Washington 98124–2207. This information may be examined at the Federal Aviation Administration (FAA), Transport Airplane Directorate, Rules Docket, 1601 Lind Avenue, SW., Renton, Washington; or at the Office of the Federal Register, 800 North Capitol Street NW., suite 700, Washington, DC.

FOR FURTHER INFORMATION CONTACT: Thomas Rodriguez, Aerospace Engineer, Airframe Branch, ANM–120S, Seattle Aircraft Certification Office, FAA, Transport Airplane Directorate, 1601 Lind Avenue, SW., Renton, Washington 98055–4056; telephone (206) 227–2779; fax (206) 227–1181.

SUPPLEMENTARY INFORMATION: A proposal to amend part 39 of the Federal Aviation Regulations (14 CFR part 39) to include an airworthiness directive (AD) that is applicable to certain Boeing Model 737–100 and –200 series airplanes was published in the **Federal Register** on December 7, 1994 (59 FR 63065). That action proposed to require various inspections for cracks in the outboard chord of the frame at body station (BS) 727 and in the outboard chord of stringer 18A; and repair or replacement of cracked parts. That action also provides for an optional terminating action for the required inspections.

Interested persons have been afforded an opportunity to participate in the making of this amendment. Due consideration has been given to the comments received.

Two commenters support the proposed rule.

The manufacturer requests that, in the Discussion section of the proposed rule, a reference to ''chords'' be changed to ''chord.'' The FAA acknowledges that ''chord'' would be more accurate. However, since the Discussion section does not appear in the final rule, no change to the final rule is necessary.

The manufacturer also requests that certain clarifications be made to the proposed rule. The manufacturer notes that the addition of the words ''BS 727'' in paragraphs (a) and (c) will clarify that it is the BS 727 upper outboard chord, not the S–18A chord, that is being referred to. The manufacturer also notes that changing the words ''outboard chords'' with ''cracked chord'' in paragraph (g)(2) would clarify the intent of the replacement requirements of that paragraph. The FAA concurs, and has revised the final rule accordingly.

Two commenters request that the final rule reference a new revision of Boeing Service Bulletin 737–53A1166 that includes procedures for repair of cracking in the S–18A outer chord. The commenters note that the service bulletin specified in the proposed rule only describes the inspection of S–18A and does not provide repair instructions in the event that cracking is detected. The FAA concurs. Since issuance of the proposed rule, the FAA has reviewed and approved Boeing Service Bulletin 737–53A1166 Revision 1, dated May 25, 1995, which describes repair procedures for cracking of stringer 18A outer chord. Paragraph (e) of the final rule has been changed to add a reference to this revised service bulletin as an additional source of service information.

One commenter states that the proposed Pulse Echo Shear Wave (PESW) inspection is redundant, since the proposed rule also would require a High Frequency Eddy Current (HFEC) inspection. The commenter also states that the HFEC inspection is more accurate for detecting cracks than the PESW inspection. The commenter therefore requests that the FAA remove the requirement to perform the PESW inspection from the proposed rule. The FAA does not concur. The PESW inspection is necessary to detect cracking that is not common to the fastener holes; the HFEC inspection only would detect cracks that extend into the fastener hole.

After careful review of the available data, including the comments noted above, the FAA has determined that air safety and the public interest require the adoption of the rule with the changes previously described. The FAA has determined that these changes will neither increase the economic burden on any operator nor increase the scope of the AD.

There are approximately 999 Boeing Model 737–100 and –200 series airplanes of the affected design in the worldwide fleet. The FAA estimates that 296 airplanes of U.S. registry will be affected by this AD, that it will take approximately 4 work hours per airplane to accomplish the required inspections, and that the average labor rate is $60 per work hour. Based on these figures, the total cost impact of the AD on U.S. operators is estimated to be $71,040, or $240 per airplane, per inspection cycle.

The total cost impact figure discussed above is based on assumptions that no operator has yet accomplished any of the requirements of this AD action, and that no operator would accomplish those actions in the future if this AD were not adopted.

Should an operator elect to accomplish the optional terminating action that will be provided by this AD action, it will take approximately 50 work hours to accomplish it, at an average labor rate of $60 per work hour. Required parts will cost approximately $3,680 per airplane. Based on these figures, the total cost impact of this optional terminating action is estimated to be $6,680 per airplane.

The regulations adopted herein will not have substantial direct effects on the States, on the relationship between the national government and the States, or on the distribution of power and responsibilities among the various levels of government. Therefore, in accordance with Executive Order 12612, it is determined that this final rule does not have sufficient federalism implications to warrant the preparation of a Federalism Assessment.

For the reasons discussed above, I certify that this action (1) is not a ''significant regulatory action'' under Executive Order 12866; (2) is not a

''significant rule'' under DOT Regulatory Policies and Procedures (44 FR 11034, February 26, 1979); and (3) will not have a significant economic impact, positive or negative, on a substantial number of small entities under the criteria of the Regulatory Flexibility Act. A final evaluation has been prepared for this action and it is contained in the Rules Docket. A copy of it may be obtained from the Rules Docket at the location provided under the caption **ADDRESSES.**

List of Subjects in 14 CFR Part 39

Air transportation, Aircraft, Aviation safety, Incorporation by reference, Safety.

Adoption of the Amendment

Accordingly, pursuant to the authority delegated to me by the Administrator, the Federal Aviation Administration amends part 39 of the Federal Aviation Regulations (14 CFR part 39) as follows:

PART 39—AIRWORTHINESS DIRECTIVES

1. The authority citation for part 39 continues to read as follows:

Authority: 49 U.S.C. App. 1354(a), 1421 and 1423; 49 U.S.C. 106(g); and 14 CFR 11.89.

§ 39.13 [Amended]

2. Section 39.13 is amended by adding the following new airworthiness directive:

95–12–17 Boeing: Amendment 39–9268. Docket 94–NM–159–AD.

Applicability: Model 737–100 and 200 series airplanes, line numbers 1 through 999, certificated in any category.

Note 1: This AD applies to each airplane identified in the preceding applicability provision, regardless of whether it has been modified, altered, or repaired in the area subject to the requirements of this AD. For airplanes that have been modified, altered, or repaired so that the performance of the requirements of this AD is affected, the owner/operator must use the authority provided in paragraph (h) to request approval from the FAA. This approval may address either no action, if the current configuration eliminates the unsafe condition; or different actions necessary to address the unsafe condition described in this AD. Such a request should include an assessment of the effect of the changed configuration on the unsafe condition addressed by this AD. In no case does the presence of any modification, alteration, or repair remove any airplane from the applicability of this AD.

Compliance: Required as indicated, unless accomplished previously.

To prevent reduced structural integrity of the outboard chords, and subsequent rapid decompression of the airplane, accomplish the following:

(a) For airplanes on which the body station (BS) 727 frame upper outboard chord has been replaced in accordance with Boeing Service Bulletin 737–53–1088: Prior to the accumulation of 30,000 total flight cycles since replacement of the upper outboard chord, or within 4,500 flight cycles after the effective date of this AD, whichever occurs later, perform close visual, pulse echo shear wave (PESW), and high frequency eddy current (HFEC) inspections to detect cracks in the outboard chord of the frame at Body station (BS) 727 and in the outboard chord of stringer 18A , in accordance with Part I of the Accomplishment Instructions of either Boeing Alert Service Bulletin 737–53A1166, dated June 30, 1994; or Boeing Service Bulletin 737–53A1166, Revision 1, dated May 25, 1995.

(b) Repeat the inspections required by paragraph (a) of this AD as follows, until the optional terminating action described in paragraph (g) of this AD is accomplished:

(1) If, at the time of the most recent inspection required by paragraph (a) or (b) of this AD, the airplane has accumulated 27,000 or more total flight cycles, but fewer than 50,000 total flight cycles, since the replacement of the outboard chord: Perform the next inspection within 15,000 flight cycles. Repeat the inspection thereafter at intervals not to exceed 15,000 flight cycles until the airplane has accumulated 50,000 or more total flight cycles since the replacement of the outboard chord; then perform the inspections required by paragraph (b)(2) of this AD.

(2) If, at the time of the most recent inspection required by paragraph (a) or (b) of this AD, the airplane has accumulated 50,000 or more total flight cycles, but fewer than 60,000 total flight cycles, since the replacement of the outboard chord: Perform the next inspection within 7,500 flight cycles. Repeat the inspection thereafter at intervals not to exceed 7,500 flight cycles until the airplane has accumulated 60,000 or more total flight cycles since the replacement of the outboard chord; then perform the inspections required by paragraph (b)(3) of this AD.

(3) If, at the time of the most recent inspection required by paragraph (a) or (b) of this AD, the airplane has accumulated 60,000 or more total flight cycles, but fewer than 70,000 total flight cycles, since the replacement of the outboard chord: Perform the next inspection within 5,000 flight cycles. Repeat the inspection thereafter at intervals not to exceed 5,000 flight cycles until the airplane has accumulated 70,000 or more total flight cycles since the replacement of the outboard chord; then perform the inspections required by paragraph (b)(4) of this AD.

(4) If, at the time of the most recent inspection required by paragraph (a) or (b) of this AD, the airplane has accumulated 70,000 or more total flight cycles since replacement of the outboard chord: Perform the next inspection within 3,000 flight cycles. Repeat the inspection thereafter at intervals not to exceed 3,000 flight cycles.

(c) For airplanes on which the BS 727 frame outboard chord has not been replaced or on which only the lower outboard chord has been replaced in accordance with Boeing Service Bulletin 737–53–1088: Perform close visual, PESW, and HFEC inspections to detect cracks in the outboard chord of the frame at BS 727 and in the outboard chord of stringer 18A, in accordance with Part I of the Accomplishment Instructions of either Boeing Alert Service Bulletin 737–53A1166, dated June 30, 1994; or Boeing Service Bulletin 737–53A1166, Revision 1, dated May 25, 1995. Perform these inspections initially at the time specified in paragraph (c)(1), (c)(2), (c)(3), or (c)(4), as applicable. Repeat these inspections thereafter at the intervals specified in paragraph (d) of this AD.

(1) For airplanes that have accumulated 27,000 or more total flight cycles, but fewer than 50,000 total flight cycles, as of the effective date of this AD: Inspect prior to the accumulation of 4,500 flight cycles after the effective date of this AD.

(2) For airplanes that have accumulated 50,000 or more total flight cycles, but fewer than 60,000 total flight cycles, as of the effective date of this AD: Inspect prior to the accumulation of 2,500 flight cycles after the effective date of this AD.

(3) For airplanes that have accumulated 60,000 or more total flight cycles, but fewer than 70,000 total flight cycles as of the effective date of this AD: Inspect prior to the accumulation of 1,500 flight cycles after the effective date of this AD.

(4) For airplanes that have accumulated 70,000 or more total flight cycles as of the effective date of this AD: Inspect prior to the accumulation of 500 flight cycles or within 90 days after the effective date of this AD, whichever occurs first.

(d) Repeat the inspections required by paragraph (c) of this AD as follows, until the optional terminating action described in paragraph (g) of this AD is accomplished:

(1) If, at the time of the most recent inspection required by paragraph (c) or (d) of this AD, the airplane has accumulated 27,000 or more total flight cycles, but fewer than 50,000 total flight cycles: Perform the next inspection within 15,000 flight cycles. Repeat the inspection thereafter at intervals not to exceed 15,000 flight cycles until the airplane has accumulated 50,000 or more total flight cycles; then perform the inspections required by paragraph (d)(2) of this AD.

(2) If, at the time of the most recent inspection required by paragraph (c) or (d) of this AD, the airplane had accumulated 50,000 or more total flight cycles, but fewer than 60,000 total flight cycles: Perform the next inspection within 7,500 flight cycles. Repeat the inspection thereafter at intervals not to exceed 7,500 flight cycles until the airplane has accumulated 60,000 or more total flight cycles; then perform the inspections required by paragraph (d)(3) of this AD.

(3) If, at the time of the most recent inspection required by paragraph (c) or (d) of this AD, the airplane had accumulated 60,000 or more total flight cycles, but fewer than 70,000 total flight cycles: Perform the next inspection within 5,000 flight cycles. Repeat the inspection thereafter at intervals not to exceed 5,000 flight cycles until the airplane has accumulated 70,000 or more

total flight cycles; then perform the inspections required by paragraph (b)(4) of this AD.

(4) If, at the time of the most recent inspection required by paragraph (c) or (d) of this AD, the airplane had accumulated 70,000 or more total flight cycles: Perform the next inspection within 3,000 flight cycles. Repeat the inspection thereafter at intervals not to exceed 3,000 flight cycles.

(e) If any crack is found in the outboard chord of stringer 18A during any inspection required by this AD, repair prior to further flight, in accordance with either paragraph (e)(1) or (e)(2) of this AD.

(1) Boeing Service Bulletin 737–53A1166, Revision 1, dated May 25, 1995, or

(2) A method approved by the Manager, Seattle Aircraft Certification Office, FAA, Transport Airplane Directorate.

(f) If any crack is found in the outboard chord of the frame at BS 727 during any inspection required by this AD, accomplish paragraph (f)(1) or (f)(2) of this AD, as applicable, in accordance with either Boeing Alert Service Bulletin 737–53A1166, dated June 30, 1994; or Boeing Service Bulletin 737–53A1166, Revision 1, dated May 25, 1995.

(1) For any crack that extends from the forward edge of the chord or from the forward fastener hole, but that does not extend past the second fastener hole, accomplish either paragraph (f)(1)(i) or (f)(1)(ii) of this AD. Thereafter, perform initial and repetitive inspections in accordance with paragraphs (a) and (b) of this AD.

(i) Prior to further flight, install the time limited repair. Prior to the accumulation of 4,500 flight cycles or within 18 months, after accomplishing the time-limited repair, whichever occurs first, replace the outboard chord. Or

(ii) Prior to further flight, replace the outboard chord.

Note 2: Boeing Alert Service Bulletin 737–53A1166 references Boeing Service Bulletin 737–53–1088 as an additional source of service information for procedures to replace the chord.

(2) For any crack that extends from the forward edge of the chord, or from the forward fastener hole, and that extends past the second fastener hole, prior to further flight, replace the outboard chord in accordance with the alert service bulletin. Thereafter, perform initial and repetitive inspections in accordance with paragraphs (a) and (b) of this AD.

(g) Accomplishment of the following actions in accordance with either Boeing Alert Service Bulletin 737–53A1166, dated June 30, 1994, or Revision 1, dated May 25, 1995, constitutes terminating actions for the requirements of this AD:

(1) For airplanes on which no crack is found: Install the preventative modification in accordance with the alert service bulletin.

(2) For airplanes on which any crack is found: Prior to further flight, replace the cracked chord and install the preventative modification in accordance with the alert service bulletin.

(h) An alternative method of compliance or adjustment of the compliance time that provides an acceptable level of safety may be used if approved by the Manager, Seattle Aircraft Certification Office (ACO), FAA, Transport Airplane Directorate. Operators shall submit their requests through an appropriate FAA Principal Maintenance Inspector, who may add comments and then send it to the Manager, Seattle ACO.

Note 3: Information concerning the existence of approved alternative methods of compliance with this AD, if any, may be obtained from the Seattle ACO.

(i) Special flight permits may be issued in accordance with sections 21.197 and 21.199 of the Federal Aviation Regulations (14 CFR 21.197 and 21.199) to operate the airplane to a location where the requirements of this AD can be accomplished.

(j) The inspections and replacement shall be done in accordance with either Boeing Alert Service Bulletin 737–53A1166, dated June 30, 1994, including Addendum, or Boeing Service Bulletin 737–53A1166, Revision 1, dated May 25, 1995, including Addendum. This incorporation by reference was approved by the Director of the Federal Register in accordance with 5 U.S.C. 552(a) and 1 CFR part 51. Copies may be obtained from Boeing Commercial Airplane Group, P.O. Box 3707, Seattle, Washington 98124–2207. Copies may be inspected at the FAA, Transport Airplane Directorate, 1601 Lind Avenue SW., Renton, Washington; or at the Office of the Federal Register, 800 North Capitol Street NW., suite 700, Washington, DC.

(k) This amendment becomes effective on August 18, 1995.

Issued in Renton, Washington, on June 5, 1995.

Darrell M. Pederson,

Acting Manager, Transport Airplane Directorate, Aircraft Certification Service.

[FR Doc. 95–14167 Filed 7–18–95; 8:45 am]

BILLING CODE 4910–13–U

---

14 CFR Part 39

[Docket No. 94–NM–110–AD; Amendment 39–9302; AD 95–14–08]

Airworthiness Directives; British Aerospace Model Viscount 744, 745D, and 810 Airplanes

AGENCY: Federal Aviation Administration, DOT.

ACTION: Final rule.

SUMMARY: This amendment adopts a new airworthiness directive (AD), applicable to all British Aerospace Model Viscount 744, 745D, and 810 airplanes, that requires repetitive inspections to detect discrepancies of certain fittings and the actuator beam structure of the nose landing gear, and replacement of discrepant parts. This amendment is prompted by reports of fatigue cracking of the undercarriage bracing of the nose wheel. The actions specified by this AD are intended to prevent such fatigue cracking, which could result in the failure of the structure and fittings, and subsequent collapse of the nose landing gear.

DATES: Effective August 18, 1995.

The incorporation by reference of certain publications listed in the regulations is approved by the Director of the Federal Register as of August 18, 1995.

ADDRESSES: The service information referenced in this AD may be obtained from British Aerospace Regional Aircraft Ltd., Engineering Support Manager, Military Business Unit, Chadderton Works, Greengate, Middleton, Manchester M24 1SA, England. This information may be examined at the Federal Aviation Administration (FAA), Transport Airplane Directorate, Rules Docket, 1601 Lind Avenue, SW., Renton, Washington; or at the Office of the Federal Register, 800 North Capitol Street, NW., suite 700, Washington, DC.

FOR FURTHER INFORMATION CONTACT: William Schroeder, Aerospace Engineer, Standardization Branch, ANM–113, FAA, Transport Airplane Directorate, 1601 Lind Avenue, SW., Renton, Washington 98055–4056; telephone (206) 227–2148; fax (206) 227–1149.

SUPPLEMENTARY INFORMATION: A proposal to amend part 39 of the Federal Aviation Regulations (14 CFR part 39) to include an airworthiness directive (AD) that is applicable to all British Aerospace Model Viscount 744, 745D, and 810 airplanes was published in the **Federal Register** on April 26, 1995 (60 FR 20458). That action proposed to require repetitive inspections to detect discrepancies of certain fittings and the actuator beam structure of the nose landing gear, and replacement of discrepant parts.

Interested persons have been afforded an opportunity to participate in the making of this amendment. No comments were submitted in response to the proposal or the FAA's determination of the cost to the public. The FAA has determined that air safety and the public interest require the adoption of the rule as proposed.

The FAA estimates that 29 airplanes of U.S. registry will be affected by this AD, that it will take approximately 15 work hours per airplane to accomplish the required actions, and that the average labor rate is $60 per work hour. Based on these figures, the total cost impact of the AD on U.S. operators is estimated to be $26,100, or $900 per airplane, per inspection cycle.

The total cost impact figure discussed above is based on assumptions that no operator has yet accomplished any of

the requirements of this AD action, and that no operator would accomplish those actions in the future if this AD were not adopted.

The regulations adopted herein will not have substantial direct effects on the States, on the relationship between the national government and the States, or on the distribution of power and responsibilities among the various levels of government. Therefore, in accordance with Executive Order 12612, it is determined that this final rule does not have sufficient federalism implications to warrant the preparation of a Federalism Assessment.

For the reasons discussed above, I certify that this action (1) is not a ''significant regulatory action'' under Executive Order 12866; (2) is not a ''significant rule'' under DOT Regulatory Policies and Procedures (44 FR 11034, February 26, 1979); and (3) will not have a significant economic impact, positive or negative, on a substantial number of small entities under the criteria of the Regulatory Flexibility Act. A final evaluation has been prepared for this action and it is contained in the Rules Docket. A copy of it may be obtained from the Rules Docket at the location provided under the caption **ADDRESSES.**

List of Subjects in 14 CFR Part 39

Air transportation, Aircraft, Aviation safety, Incorporation by reference, Safety.

Adoption of the Amendment

Accordingly, pursuant to the authority delegated to me by the Administrator, the Federal Aviation Administration amends part 39 of the Federal Aviation Regulations (14 CFR part 39) as follows:

PART 39—AIRWORTHINESS DIRECTIVES

1. The authority citation for part 39 continues to read as follows:

Authority: 49 U.S.C. App. 1354(a), 1421 and 1423; 49 U.S.C. 106(g); and 14 CFR 11.89.

§ 39.13 [Amended]

2. Section 39.13 is amended by adding the following new airworthiness directive:

95–14–08 British Aerospace Regional Aircraft Limited (Formerly British Aerospace Commercial Aircraft Limited, Vickers-Armstrongs Aircraft Limited): Amendment 39–9302. Docket 94–NM–110–AD.

Applicability: All Model Viscount 744, 745D, and 810 airplanes, certificated in any category.

Note 1: This AD applies to each airplane identified in the preceding applicability provision, regardless of whether it has been modified, altered, or repaired in the area subject to the requirements of this AD. For airplanes that have been modified, altered, or repaired so that the performance of the requirements of this AD is affected, the owner/operator must use the authority provided in paragraph (c) of this AD to request approval from the FAA. This approval may address either no action, if the current configuration eliminates the unsafe condition; or different actions necessary to address the unsafe condition described in this AD. Such a request should include an assessment of the effect of the changed configuration on the unsafe condition addressed by this AD. In no case does the presence of any modification, alteration, or repair remove any airplane from the applicability of this AD.

Compliance: Required as indicated, unless accomplished previously.

To prevent collapse of the nose landing gear, accomplish the following:

(a) Prior to the accumulation of 2,050 landings after the effective date of this AD, or within 12 months after the effective date of this AD, whichever occurs first: Perform a visual inspection and non-destructive testing (NDT) inspection to detect discrepancies of the actuator beam structure and actuator attachment fittings of the nose landing gear, in accordance with Viscount Alert Preliminary Technical Leaflet (PTL) 331 VIS 1 Doc 12 (for Model 744 and 745D airplanes), or PTL 202, VIS 1 Doc. 4 (for Model Viscount 810 airplanes), both dated November 1, 1991, as applicable. Thereafter, repeat these inspections at intervals not to exceed 2,050 landings.

(b) If any discrepancy is found, prior to further flight, replace the discrepant part with a new part, in accordance with Viscount Alert PTL 331, VIS 1 Doc 12 (for Model 744 and 745D airplanes), or PTL 202, VIS 1 Doc. 4 (for Model 810 airplanes), both dated November 1, 1991, as applicable.

(c) An alternative method of compliance or adjustment of the compliance time that provides an acceptable level of safety may be used if approved by the Manager, Standardization Branch, ANM–113, FAA, Transport Airplane Directorate. Operators shall submit their requests through an appropriate FAA Principal Maintenance Inspector, who may add comments and then send it to the Manager, Standardization Branch, ANM–113.

Note 2: Information concerning the existence of approved alternative methods of compliance with this AD, if any, may be obtained from the Standardization Branch, ANM–113.

(d) Special flight permits may be issued in accordance with sections 21.197 and 21.199 of the Federal Aviation Regulations (14 CFR 21.197 and 21.199) to operate the airplane to a location where the requirements of this AD can be accomplished.

(e) The inspections and replacement shall be done in accordance with Viscount Alert Preliminary Technical Leaflet (PTL) 331 VIS 1 Doc 12, including Appendix 1, dated November 1, 1991; or Viscount Alert PTL 202, VIS 1 Doc. 4, dated November 1, 1991; as applicable. This incorporation by reference was approved by the Director of the Federal Register in accordance with 5 U.S.C. 552(a) and 1 CFR part 51. Copies may be obtained from British Aerospace Regional Aircraft Ltd., Engineering Support Manager, Military Business Unit, Chadderton Works, Greengate, Middleton, Manchester M24 1SA, England. Copies may be inspected at the FAA, Transport Airplane Directorate, 1601 Lind Avenue, SW., Renton, Washington; or at the Office of the Federal Register, 800 North Capitol Street, NW., suite 700, Washington, DC.

(f) This amendment becomes effective on August 18, 1995.

Issued in Renton, Washington, on June 27, 1995.

Darrell M. Pederson,

Acting Manager, Transport Airplane Directorate, Aircraft Certification Service.

[FR Doc. 95–16261 Filed 7–18–95; 8:45 am]

BILLING CODE 4910–13–U

---

14 CFR Part 39

[Docket No. 95–NM–119–AD; Amendment 39–9303; AD 95–14–09]

Airworthiness Directives; Learjet Model 60 Airplanes

AGENCY: Federal Aviation Administration, DOT.

ACTION: Final rule; request for comments.

SUMMARY: This amendment adopts a new airworthiness directive (AD) that is applicable to certain Learjet Model 60 airplanes. This action requires inspection to detect bends in or damage to the fuel crossflow tube; inspection to determine clearance between the fuel crossflow tube and the flight control cables; and replacement or repair of the tube, if necessary. This amendment is prompted by reports of damage to the fuel crossflow tube and inadequate clearance between the fuel crossflow tube and the flight control cables due to bends in the fuel crossflow tube. The actions specified in this AD are intended to prevent chafing and eventual failure of the fuel crossflow tube due to inadequate clearance between the tube and the flight control cables; this condition could result in loss of fuel from one fuel tank during normal operating conditions or loss of fuel from both main fuel tanks during fuel cross feeding operations.

DATES: Effective August 3, 1995.

The incorporation by reference of certain publications listed in the regulations is approved by the Director of the Federal Register as of August 3, 1995.

Comments for inclusion in the Rules Docket must be received on or before September 18, 1995.

ADDRESSES: Submit comments in triplicate to the Federal Aviation Administration (FAA), Transport Airplane Directorate, ANM–103, Attention: Rules Docket No. 95–NM–119–AD, 1601 Lind Avenue, SW., Renton, Washington 98055–4056.

The service information referenced in this AD may be obtained from Learjet, P.O. Box 7707, Wichita, Kansas 67277–7707. This information may be examined at the FAA, Transport Airplane Directorate, 1601 Lind Avenue, SW., Renton, Washington; or at the FAA, Wichita Aircraft Certification Office, Small Airplane Directorate, 1801 Airport Road, Room 100, Mid-Continent Airport, Wichita, Kansas; or at the Office of the Federal Register, 800 North Capitol Street, NW., suite 700, Washington, DC.

FOR FURTHER INFORMATION CONTACT: Charles D. Riddle, Aerospace Engineer, Propulsion Branch, ACE–117W, FAA, Wichita Aircraft Certification Office, Small Airplane Directorate, 1801 Airport Road, Room 100, Mid-Continent Airport, Wichita, Kansas 67209; telephone (316) 946–4144; fax (316) 946–4407.

SUPPLEMENTARY INFORMATION: Recently, the FAA has received reports from operators of Learjet Model 60 airplanes that the fuel crossflow tube in the underwing keelbeam area was bent slightly upward. In two instances, the fuel crossflow tube was found to be chafed by the flight control cables due to inadequate clearance between the flight control cables and the fuel crossflow tube. Investigation revealed that the tube was installed improperly. Chafing and eventual failure of the fuel crossflow tube due to inadequate clearance between the tube and the flight control cables, if not corrected, could result in loss of fuel from one fuel tank during normal operating conditions or loss of fuel from both main fuel tanks during fuel cross feeding operations.

The FAA has reviewed and approved Learjet Alert Service Bulletin SB A60–28–3, dated May 12, 1995, which describes procedures for inspection to detect bends in or damage to the fuel crossflow tube, and replacement of bent or damaged tubes with new tubes; and inspection to determine the clearance between the fuel crossflow tube and the flight control cables, and replacement of tubes with new tubes if inadequate clearance exists. This alert service bulletin describes procedures for replacement of the fuel crossflow tube with a new tube for a certain group of airplanes. Replacement procedures for the remaining group of airplanes is described in Learjet Service Bulletin SB 60–28–4, dated May 12, 1995, which the FAA has reviewed and approved.

Since an unsafe condition has been identified that is likely to exist or develop on other Learjet Model 60 airplanes of the same type design, this AD is being issued to prevent chafing and eventual failure of the fuel crossflow tube due to inadequate clearance between the tube and the flight control cables; this condition could result in loss of fuel from one fuel tank during normal operating conditions or loss of fuel from both main fuel tanks during fuel cross feeding operations. This AD requires inspection to detect bends in or damage to the fuel crossflow tube, inspection to determine clearance between the fuel crossflow tube and the flight control cables, and replacement of tubes, if necessary. The actions are required to be accomplished in accordance with the service bulletins described previously.

This AD differs from the service bulletin in that the AD requires replacement of the tube if the tube is not bent or damaged and minimum clearance does not exist. This AD also requires the repair of certain fuel crossflow tubes in accordance with a method approved by the FAA.

As a result of recent communications with the Air Transport Association (ATA) of America, the FAA has learned that, in general, some operators may misunderstand the legal effect of AD's on airplanes that are identified in the applicability provision of the AD, but that have been altered or repaired in the area addressed by the AD. The FAA points out that all airplanes identified in the applicability provision of an AD are legally subject to the AD. If an airplane has been altered or repaired in the affected area in such a way as to affect compliance with the AD, the owner or operator is required to obtain FAA approval for an alternative method of compliance with the AD, in accordance with the paragraph of each AD that provides for such approvals. A note has been included in this rule to clarify this long-standing requirement.

Since a situation exists that requires the immediate adoption of this regulation, it is found that notice and opportunity for prior public comment hereon are impracticable, and that good cause exists for making this amendment effective in less than 30 days.

Comments Invited

Although this action is in the form of a final rule that involves requirements affecting flight safety and, thus, was not preceded by notice and an opportunity for public comment, comments are invited on this rule. Interested persons are invited to comment on this rule by submitting such written data, views, or arguments as they may desire. Communications shall identify the Rules Docket number and be submitted in triplicate to the address specified under the caption **ADDRESSES**. All communications received on or before the closing date for comments will be considered, and this rule may be amended in light of the comments received. Factual information that supports the commenter's ideas and suggestions is extremely helpful in evaluating the effectiveness of the AD action and determining whether additional rulemaking action would be needed.

Comments are specifically invited on the overall regulatory, economic, environmental, and energy aspects of the rule that might suggest a need to modify the rule. All comments submitted will be available, both before and after the closing date for comments, in the Rules Docket for examination by interested persons. A report that summarizes each FAA-public contact concerned with the substance of this AD will be filed in the Rules Docket.

Commenters wishing the FAA to acknowledge receipt of their comments submitted in response to this rule must submit a self-addressed, stamped postcard on which the following statement is made: ''Comments to Docket Number 95–NM–119–AD.'' The postcard will be date stamped and returned to the commenter.

The regulations adopted herein will not have substantial direct effects on the States, on the relationship between the national government and the States, or on the distribution of power and responsibilities among the various levels of government. Therefore, in accordance with Executive Order 12612, it is determined that this final rule does not have sufficient federalism implications to warrant the preparation of a Federalism Assessment.

The FAA has determined that this regulation is an emergency regulation that must be issued immediately to correct an unsafe condition in aircraft, and that it is not a ''significant regulatory action'' under Executive Order 12866. It has been determined further that this action involves an emergency regulation under DOT Regulatory Policies and Procedures (44 FR 11034, February 26, 1979). If it is determined that this emergency regulation otherwise would be significant under DOT Regulatory Policies and Procedures, a final

regulatory evaluation will be prepared and placed in the Rules Docket. A copy of it, if filed, may be obtained from the Rules Docket at the location provided under the caption **ADDRESSES**.

List of Subjects in 14 CFR Part 39

Air transportation, Aircraft, Aviation safety, Incorporation by reference, Safety.

Adoption of the Amendment

Accordingly, pursuant to the authority delegated to me by the Administrator, the Federal Aviation Administration amends part 39 of the Federal Aviation Regulations (14 CFR part 39) as follows:

PART 39—AIRWORTHINESS DIRECTIVES

1. The authority citation for part 39 continues to read as follows:

Authority: 49 U.S.C. App. 1354(a), 1421 and 1423; 49 U.S.C. 106(g); and 14 CFR 11.89.

§ 39.13 [Amended]

2. Section 39.13 is amended by adding the following new airworthiness directive:

95–14–09 Learjet: Amendment 39–9303. Docket 95–NM–119–AD.

Applicability: Model 60 airplanes having serial numbers 60–001 through 60–058 inclusive, certificated in any category.

Note 1: This AD applies to each airplane identified in the preceding applicability provision, regardless of whether it has been modified, altered, or repaired in the area subject to the requirements of this AD. For airplanes that have been modified, altered, or repaired so that the performance of the requirements of this AD is affected, the owner/operator must use the authority provided in paragraph (c) of this AD to request approval from the FAA. This approval may address either no action, if the current configuration eliminates the unsafe condition; or different actions necessary to address the unsafe condition described in this AD. Such a request should include an assessment of the effect of the changed configuration on the unsafe condition addressed by this AD. In no case does the presence of any modification, alteration, or repair remove any airplane from the applicability of this AD.

Compliance: Required as indicated, unless accomplished previously.

To prevent loss of fuel from one fuel tank during normal operating conditions or loss of fuel from both main fuel tanks during fuel cross feeding operations, due to chafing and eventual failure of the fuel crossflow tube, accomplish the following:

(a) Within 10 hours time-in-service after the effective date of this AD, perform a visual inspection to detect bends in or damage to the fuel crossflow tube, and perform an inspection to determine whether the clearance between the fuel crossflow tube and the flight control cables is at least 0.150 inch; in accordance with Learjet Alert Service Bulletin SB A60–28–3, dated May 12, 1995.

(1) If the tube is not found to be bent or damaged, and a minimum clearance of 0.150 inch exists, no further action is required by this AD.

(2) If the tube is not found to be bent or damaged, and a minimum clearance of 0.150 inch does not exist, within 10 hours time-in-service after the effective date of this AD, replace the tube with a new tube in accordance with either paragraph (a)(2)(i) or (a)(2)(ii) of this AD, as applicable. Prior to further flight following replacement of the tube, perform an inspection to determine whether the clearance between the fuel crossflow tube and the flight control cables is at least 0.150 inch, in accordance with Learjet Alert Service Bulletin SB A60–28–3, dated May 12, 1995.

(i) For airplanes having serial numbers 60–001 through 60–055, inclusive: Replace the fuel crossflow tube with a new tube in accordance with Learjet Service Bulletin SB 60–28–4, dated May 12, 1995.

(ii) For airplanes having serial number 60–056 through 60–058, inclusive: Replace the fuel crossflow tube with a new tube in accordance with paragraph 2.B. of Learjet Alert Service Bulletin SB A60–28–3, dated May 12, 1995.

(3) If the tube is found to be bent or damaged, prior to further flight, replace the tube with a new tube in accordance with either paragraph (a)(3)(i) or (a)(3)(ii) of this AD, as applicable. Prior to further flight following replacement of the tube, perform an inspection to determine whether the clearance between the fuel crossflow tube and the flight control cables is at least 0.150 inch, in accordance with Learjet Alert Service Bulletin SB A60–28–3, dated May 12, 1995.

(i) For airplanes having serial numbers 60–001 through 60–055, inclusive: Replace the fuel crossflow tube with a new tube in accordance with Learjet Service Bulletin SB 60–28–4, dated May 12, 1995.

(ii) For airplanes having serial number 60–056 through 60–058, inclusive: Replace the fuel crossflow tube with a new tube in accordance with paragraph 2.B. of Learjet Alert Service Bulletin SB A60–28–3, dated May 12, 1995.

(b) If a minimum clearance of 0.150 inch does not exist on the new fuel crossflow tube that was installed in accordance with the requirements of paragraph (a) of this AD, prior to further flight, repair in accordance with a method approved by the Manager, Wichita Aircraft Certification Office (ACO), FAA, Small Airplane Directorate.

(c) An alternative method of compliance or adjustment of the compliance time that provides an acceptable level of safety may be used if approved by the Manager, Wichita ACO. Operators shall submit their requests through an appropriate FAA Principal Maintenance Inspector, who may add comments and then send it to the Manager, Wichita ACO.

Note 2: Information concerning the existence of approved alternative methods of compliance with this AD, if any, may be obtained from the Wichita ACO.

(d) Special flight permits may be issued in accordance with sections 21.197 and 21.199 of the Federal Aviation Regulations (14 CFR 21.197 and 21.199) to operate the airplane to a location where the requirements of this AD can be accomplished.

(e) The inspections and certain replacements shall be done in accordance with Learjet Alert Service Bulletin SB A60–28–3, dated May 12, 1995; and certain other replacements shall be done in accordance with Learjet Service Bulletin SB 60–28–4, dated May 12, 1995. This incorporation by reference was approved by the Director of the Federal Register in accordance with 5 U.S.C. 552(a) and 1 CFR part 51. Copies may be obtained from Learjet, P.O. Box 7707, Wichita, Kansas 67277–7707. Copies may be inspected at the FAA, Transport Airplane Directorate, 1601 Lind Avenue, SW., Renton, Washington; or at the FAA, Wichita Aircraft Certification Office, Small Airplane Directorate, 1801 Airport Road, Room 100, Mid-Continent Airport, Wichita, Kansas; or at the Office of the Federal Register, 800 North Capitol Street, NW., suite 700, Washington, DC.

(f) This amendment becomes effective on August 3, 1995.

Issued in Renton, Washington, on June 28, 1995.

Darrell M. Pederson,

Acting Manager, Transport Airplane Directorate, Aircraft Certification Service.

[FR Doc. 95–16377 Filed 7–18–95; 8:45 am]

BILLING CODE 4910–13–U

---

14 CFR Part 39

[Docket No. 94–NM–114–AD; Amendment 39–9298; AD 95–14–06]

Airworthiness Directives; McDonnell Douglas Model DC–10 Series Airplanes and Model KC–10A (Military) Airplanes

AGENCY: Federal Aviation Administration, DOT.

ACTION: Final rule.

SUMMARY: This amendment adopts a new airworthiness directive (AD), applicable to certain McDonnell Douglas Model DC–10 series airplanes and Model KC–10A (military) airplanes, that requires various modifications of the flight controls, hydraulic power systems, and landing gear. This amendment is prompted by a recommendation by the Systems Review Task Force (SRTF) for accomplishment of certain modifications that will enhance the controllability of these airplanes in the unlikely event of catastrophic damage to all hydraulics systems. The actions specified by this AD are intended to ensure airplane survivability in the event of damage to fully powered flight control systems.

DATES: Effective August 18, 1995.

The incorporation by reference of certain publications listed in the

regulations is approved by the Director of the Federal Register as of August 18, 1995.

ADDRESSES: The service information referenced in this AD may be obtained from McDonnell Douglas Corporation, 3855 Lakewood Boulevard, Long Beach, California 90846, Attention: Technical Publications Business Administration, Department C1–L51 (2–60). This information may be examined at the Federal Aviation Administration (FAA), Transport Airplane Directorate, Rules Docket, 1601 Lind Avenue, SW., Renton, Washington; or at the FAA, Los Angeles Aircraft Certification Office, Transport Airplane Directorate, 3960 Paramount Boulevard, Lakewood, California; or at the Office of the Federal Register, 800 North Capitol Street, NW., suite 700, Washington, DC.

FOR FURTHER INFORMATION CONTACT: Mauricio J. Kuttler, Aerospace Engineer, Systems and Equipment Branch, ANM–130L, FAA, Transport Airplane Directorate, Los Angeles Aircraft Certification Office, 3960 Paramount Boulevard, Lakewood, California 90712; telephone (310) 627–5355; fax (310) 627–5210.

SUPPLEMENTARY INFORMATION: A proposal to amend part 39 of the Federal Aviation Regulations (14 CFR part 39) to include an airworthiness directive (AD) that is applicable to certain McDonnell Douglas Model DC–10 series airplanes and Model KC–10A (military) airplanes was published in the **Federal Register** on January 4, 1995 (60 FR 389). That action proposed to require various modifications of the flight controls, hydraulic power systems, and landing gear.

Discussion of Comments Received

Interested persons have been afforded an opportunity to participate in the making of this amendment. Due consideration has been given to the comments received.

One commenter supports the proposed rule.

McDonnell Douglas and the Air Transport Association (ATA) of America, on behalf of its members, request an extension of the comment period from March 1, 1995, to March 31, 1995, for the purpose of convening to assess the impact of the recommendation of the Systems Review Task Force (SRTF) for this AD action. The ATA states that some carriers have already incorporated the recommendations of the SRTF to varying degrees. Based on that experience, the carriers question the implementation of those recommendations in the exact manner contemplated originally by the SRTF. Specifically, one commenter states that it does not believe current history requires the accomplishment of all the service bulletins cited in the proposed rule.

The FAA does not concur with the commenters' request to extend the comment period. The FAA has accepted and considered all comments received to date concerning this AD action, including those received after the comment period closed on March 1, 1995. The FAA does not consider that delaying this AD action further is warranted, since the actions required by this AD must be accomplished in a timely manner to ensure airplane survivability in the event of damage to fully powered flight control systems. Furthermore, ATA members were represented at meetings of the SRTF to discuss the 12 systems enhancements contained in the specific service bulletins addressed in this AD. At that time, ATA members present at the meeting agreed with the recommendation for issuance of an AD to require the accomplishment of those systems enhancements.

Two commenters express a concern that sufficient parts may not be available to accomplish the requirements of the proposed AD; therefore, operators may not be able to meet the proposed 24-month compliance time. The FAA infers that the commenters request an extention of the proposed compliance time. The FAA does not concur. In developing an appropriate compliance time for this action, the FAA considered not only the degree of urgency associated with addressing the subject unsafe condition, but the availability of required parts, and the practical aspect of installing the required system enhancements within an interval of time that parallels the normally scheduled maintenance holds for the majority of affected operators. In consideration of these items, the FAA finds that the proposed compliance time of 24 months is appropriate for this rulemaking action. However, the FAA recognizes that a parts availability problem may exist in certain cases. Therefore, under the provisions of paragraph (b) of the final rule, the FAA may approve requests for adjustments to the compliance time if data are submitted to substantiate that such an adjustment would provide an acceptable level of safety.

Two commenters express concern that the economic impact information reflected in the proposal is underestimated. One commenter provides a detailed breakdown of costs associated with the accomplishment of five service bulletins cited in the proposed rule. The cost estimates for those service bulletins, as presented by the commenter, are higher than those specified in the proposed rule. Those estimates include costs for planning hours by engineering staff. The second commenter estimates that the cost estimate specified in one particular service bulletin is off (lower) by a factor of 2 or 3. This commenter indicates that the accomplishment of one of the service bulletins referenced will result in loss of revenue due to payload restrictions on a small percentage of flights as a result of a 40-pound weight increase incurred by installation of the subject modification. Both commenters state that costs associated with accomplishing a particular service bulletin that is not cited in the proposal should be included in the economic impact information, since the service bulletin is specified as a prerequisite for accomplishment of a service bulletin that is cited in the proposal.

From these remarks, the FAA infers that the commenters request that the economic impact information specified in the preamble to this rule be revised. Consequently, the FAA has re-evaluated that information and obtained updated cost data from the manufacturer. Accordingly, the FAA has revised the economic impact information, below, to reflect the best data available to date. The cost analysis in AD rulemaking actions typically does not include planning hours or costs pertaining to particular operating scenarios that could result in higher fuel costs and lower payload capacity or restrictions, as suggested by the commenters. The number of work hours represents the time required to gain access, remove parts, modify, and close up.

One commenter requests that separate AD's be issued for each of the 12 service bulletins cited in the proposed AD to allow for adequate tracking and closure. The FAA does not concur with this request. Issuing 12 separate AD's would not increase the ability of affected operators to track compliance with the AD and maintain accurate records of compliance more adequately than issuing a single AD to address all 12 service bulletins. The FAA finds that the consequent workload burden that would be associated with documenting maintenance record entries (i.e., recording 12 new AD numbers) among all of the affected operators would not be appropriate. Therefore, in light of the consequent workload associated with maintenance record entries, the FAA has determined that a less burdensome approach is to issue only one AD that

requires the accomplishment of 12 service bulletins.

Conclusion

After careful review of the available data, including the comments noted above, the FAA has determined that air safety and the public interest require the adoption of the rule with the changes previously described. The FAA has determined that these changes will neither significantly increase the economic burden on any operator nor increase the scope of the AD.

The FAA is continuing to review the recommendations of the SRTF working group for these airplanes and may consider further rulemaking based on those recommendations.

Economic Impact

There are approximately 427 Model DC–10 series airplanes and Model KC–10A (military) airplanes of the affected design in the worldwide fleet. The FAA estimates that 254 airplanes of U.S. registry will be affected by this AD.

Approximate work hours to accomplish the required actions and costs for required parts are listed in the following table. The average labor rate is $60 per work hour.

Service bulletin No.	Estimated work hours	Parts cost per airplane	Total cost per airplane
27–71	5	$26,998	$27,298
27–120	3	68	248
27–152	1	487	547
27–181	5	611	911
27–201	10	9,893	10,493
27–208	5	492	792
27–209	9	489	1,029
29–109	101	1,408	7,468
29–125	4	269	509
32–134	3	5,525	5,705
32–143	3	3,926	4,106
32–157	6	70,744	71,104

Based on these figures, the total cost impact of the AD on U.S. operators is estimated to be $33,073,340, or $130,210 per airplane.

The total cost impact figure discussed above is based on assumptions that no operator has yet accomplished any of the requirements of this AD action, and that no operator would accomplish those actions in the future if this AD were not adopted.

The number of required work hours, as indicated above, is presented as if the accomplishment of the actions required by this AD were to be conducted as ''stand alone'' actions. However, the 24-month compliance time specified in paragraph (a) of this AD should allow ample time for the actions to be accomplished coincidentally with scheduled major airplane inspection and maintenance activities, thereby minimizing the costs associated with special airplane scheduling.

Further, the FAA recognizes that the obligation to maintain aircraft in an airworthy condition is vital, but sometimes expensive. Because AD's require specific actions to address specific unsafe conditions, they appear to impose costs that would not otherwise be borne by operators. However, because of the general obligation of operators to maintain aircraft in an airworthy condition, this appearance is deceptive. Attributing those costs solely to the issuance of this AD is unrealistic because, in the interest of maintaining safe aircraft, most prudent operators would accomplish the required actions even if they were not required to do so by the AD.

A full cost-benefit analysis has not been accomplished for this AD. As a matter of law, in order to be airworthy, an aircraft must conform to its type design and be in a condition for safe operation. The type design is approved only after the FAA makes a determination that it complies with all applicable airworthiness requirements. In adopting and maintaining those requirements, the FAA has already made the determination that they establish a level of safety that is cost-beneficial. When the FAA, as in this AD, makes a finding of an unsafe condition, this means that the original cost-beneficial level of safety is no longer being achieved and that the required actions are necessary to restore that level of safety. Because this level of safety has already been determined to be cost-beneficial, a full cost-benefit analysis for this AD would be redundant and unnecessary.

Regulatory Impact

The regulations adopted herein will not have substantial direct effects on the States, on the relationship between the national government and the States, or on the distribution of power and responsibilities among the various levels of government. Therefore, in accordance with Executive Order 12612, it is determined that this final rule does not have sufficient federalism implications to warrant the preparation of a Federalism Assessment.

For the reasons discussed above, I certify that this action (1) is not a ''significant regulatory action'' under Executive Order 12866; (2) is not a ''significant rule'' under DOT Regulatory Policies and Procedures (44 FR 11034, February 26, 1979); and (3) will not have a significant economic impact, positive or negative, on a substantial number of small entities under the criteria of the Regulatory Flexibility Act. A final evaluation has been prepared for this action and it is contained in the Rules Docket. A copy of it may be obtained from the Rules Docket at the location provided under the caption **ADDRESSES**.

List of Subjects in 14 CFR Part 39

Air transportation, Aircraft, Aviation safety, Incorporation by reference, Safety.

Adoption of the Amendment

Accordingly, pursuant to the authority delegated to me by the Administrator, the Federal Aviation Administration amends part 39 of the Federal Aviation Regulations (14 CFR part 39) as follows:

PART 39—AIRWORTHINESS DIRECTIVES

1. The authority citation for part 39 continues to read as follows:

Authority: 49 U.S.C. App. 1354(a), 1421 and 1423; 49 U.S.C. 106(g); and 14 CFR 11.89.

§ 39.13 [Amended]

2. Section 39.13 is amended by adding the following new airworthiness directive:

95–14–06 McDonnell Douglas: Amendment 39–9298. Docket 94–NM–114–AD.

Applicability: Model DC–10–10, –10F, –15, –30, –30F, –40, and –40F series airplanes and Model KC–10A (military) airplanes; as listed in the following McDonnell Douglas DC–10 service bulletins; certificated in any category:

Service bulletin No.	Revision level	Date issued
27–71	1	February 14, 1973.
27–120	Original	February 10, 1975.
27–152	Original	August 9, 1976.
27–181	1	May 28, 1981.
27–201	Original	December 30, 1985.
27–208	Original	September 5, 1989.
27–209	Original	October 20, 1989.
29–109	1	September 22, 1978.
29–125	2	October 23, 1987.
32–134	Original	March 22, 1977.
32–143	Original	August 8, 1978.
32–157	1	October 29, 1980.

Note 1: This AD applies to each airplane identified in the preceding applicability provision, regardless of whether it has been modified, altered, or repaired in the area subject to the requirements of this AD. For airplanes that have been modified, altered, or repaired so that the performance of the requirements of this AD is affected, the owner/operator must use the authority provided in paragraph (b) of this AD to request approval from the FAA. This approval may address either no action, if the current configuration eliminates the unsafe condition; or different actions necessary to address the unsafe condition described in this AD. Such a request should include an assessment of the effect of the changed configuration on the unsafe condition addressed by this AD. In no case does the presence of any modification, alteration, or repair remove any airplane from the applicability of this AD.

Compliance: Required as indicated, unless accomplished previously.

To ensure airplane survivability in the event of damage to fully powered flight control systems, accomplish the following:

(a) Within 24 months after the effective date of this AD, modify the flight controls, hydraulic power systems, and landing gear in accordance with paragraphs (a)(1) through (a)(12) of this AD, as applicable.

(1) For airplanes listed in McDonnell Douglas DC–10 Service Bulletin 27–71, Revision 1, dated February 14, 1973: Install surge damper assemblies and new piping assemblies in hydraulic systems 1 and 3 of the horizontal stabilizer in accordance with the service bulletin. As of the effective date of this AD, no person shall install a pipe assembly, part number AJK7004–641, –642, –643, –644, –645, –646, –647, or –648 on any airplane. As of the effective date of this AD, no person shall install a valve assembly, part number AJG7041–5515 or –5517, on any airplane unless that assembly has been modified in accordance with the service bulletin.

(2) For airplanes listed in McDonnell Douglas DC–10 Service Bulletin 27–120, dated February 10, 1975: Modify and reidentify the trim hydraulic motor assembly of the horizontal stabilizer in accordance with the service bulletin.

Note 2: The McDonnell Douglas service bulletin references Sperry Rand Corporation, Vickers Division, Service Bulletin 390017–27–2, dated December 2, 1974, as an additional source of service information.

(3) For airplanes listed in McDonnell Douglas DC–10 Service Bulletin 27–152, dated August 9, 1976: Replace the existing retaining nut locking clip on the torsional coupling of the horizontal stabilizer with a new retaining nut locking clip in accordance with the service bulletin. As of the effective date of this AD, no person shall install a locking clip or nut retainer, part number AJH7259–1, on any airplane.

(4) For airplanes listed in McDonnell Douglas DC–10 Service Bulletin 27–181, Revision 1, dated May 28, 1981: Install a modified chain drive unit on the horizontal stabilizer in accordance with the service bulletin. As of the effective date of this AD, no person shall install a chain drive unit assembly, part number AJH7337–1 or AJH7337–501; pin, part number AJH7343–1; housing assembly, part number AJH7345–1; shaft, part number AJH7075–1 or –501; or decal, part number AJH7347–1; on any airplane.

(5) For airplanes listed in McDonnell Douglas DC–10 Service Bulletin 27–201, dated December 30, 1985: Replace the hydraulic pipe assemblies of the flap lock valve with new pipe assemblies in accordance with the service bulletin. As of the effective date of this AD, no person shall install a pipe assembly, part number AYK7002–876, –877, –878, –879, –880, and –881; AYK7136–1; and AYK7137–1; on any airplane.

(6) For airplanes listed in McDonnell Douglas DC–10 Service Bulletin 27–208, dated September 5, 1989: Replace eight end caps of the trim control valve of the horizontal stabilizer with new end caps having a larger inside radius, in accordance with the service bulletin. As of the effective date of this AD, no person shall install an end cap, part number AJG7020–503; or valve assembly, part number AJG7041–5535, –5533, –5531, –5529, –5527, –5525, –5523, –5521, –5519, –5517, –5515, –5513, –5511, –5509, –5507, –5505, –5503, –5501, or –5001; on any airplane.

(7) For airplanes listed in McDonnell Douglas DC–10 Service Bulletin 27–209, dated October 20, 1989: Inspect the nuts on the shaft assembly for looseness, proper orientation, excess backlash, and engagement of the washer locking tab, in accordance with the service bulletin. As of the effective date of this AD, no person shall install a drive assembly, part number AJH7337–505, on any airplane unless that assembly has been modified in accordance with the service bulletin.

(i) If no discrepancy is found, no further action is required by this paragraph.

(ii) If any discrepancy is found, prior to further flight, replace the fuse pin, adjust backlash, and properly position and tighten the nuts in accordance with the service bulletin.

(8) For airplanes listed in McDonnell Douglas Service Bulletin 29–109, Revision 1, dated September 22, 1978: Install an indication system on the reversible motor pump in accordance with the service bulletin. As of the effective date of this AD, no person shall install a nameplate, part number ABN7191–1124, –1125, –1126, –872, –873, –874, –878, or –1084; a support, part number 2394536–509; or a plate, part number 2710497–1–6; on any airplane.

(9) For airplanes listed in McDonnell Douglas DC–10 Service Bulletin 29–125, Revision 2, dated October 23, 1987: Modify the main hydraulic power system in accordance with the service bulletin. As of the effective date of this AD, no person shall install an annunciator panel, part number 102200–268, or –274, on any airplane unless that panel has been modified in accordance with the service bulletin.

(10) For airplanes listed in McDonnell Douglas DC–10 Service Bulletin 32–134, dated March 22, 1977: Modify the aft antiskid manifold on the left and right main landing gear in accordance with the service bulletin. As of the effective date of this AD, no person shall install a bracket, part number ARG7291–1, ARG7291–501, ARG7485–501, or ARG7485–502 on any airplane. As of the effective date of this AD, no person shall install a main landing gear assembly, part number ARG7393-(Any Configuration), on any airplane unless that assembly has been modified in accordance with the service bulletin.

(11) For airplanes listed in McDonnell Douglas DC–10 Service Bulletin 32–143, dated August 8, 1978: Install protective shields over the brake and antiskid piping located on the aft side of the left and right main landing gear in accordance with the service bulletin. As of the effective date of this AD, no person shall install a support, part number ARG7551–1 or ARG7552–1, or bracket, part number AEP8009–25, on any airplane. As of the effective date of this AD, no person shall install a main landing gear assembly, part number ARG7393–(Any Configuration), on any airplane unless that assembly has been modified in accordance with the service bulletin.

(12) For airplanes listed in McDonnell Douglas DC–10 Service Bulletin 32–157, Revision 1, dated October 29, 1980: Install a doubler on the web assembly between the wheel wells of the center landing gear and the right main landing gear; install a fiberglass deflector assembly on the shock

strut of the centerline landing gear; replace the pressure gage manifold of the shock strut; and install an instruction plate and adding precaution instruction markings in the wheel well of the right main landing gear and on the forward door of the center landing gear in accordance with the service bulletin. As of the effective date of this AD, no person shall install a manifold, part number AYK7162–501, on any airplane.

(b) An alternative method of compliance or adjustment of the compliance time that provides an acceptable level of safety may be used if approved by the Manager, Los Angeles Aircraft Certification Office (ACO), FAA, Transport Airplane Directorate. Operators shall submit their requests through an appropriate FAA Principal Maintenance Inspector, who may add comments and then send it to the Manager, Los Angeles ACO.

Note 3: Information concerning the existence of approved alternative methods of compliance with this AD, if any, may be obtained from the Los Angeles ACO.

(c) Special flight permits may be issued in accordance with sections 21.197 and 21.199 of the Federal Aviation Regulations (14 CFR 21.197 and 21.199) to operate the airplane to a location where the requirements of this AD can be accomplished.

(d) The actions shall be done in accordance with the following McDonnell Douglas DC–10 Service Bulletins, which contain the specified effective pages:

Service bulletin referenced and date	Page No.	Revision level shown on page	Date shown on page
27–71, Revision 1, February 14, 1973	1–10	1	February 14, 1973.
27–120, February 10, 1975	1	Original	February 10, 1975.
27–152, August 9, 1976	1–6	Original	August 9, 1976.
27–181, Revision 1, May 28, 1981	1–12	1	May 28, 1981.
27–201, December 30, 1985	1–15	Original	December 30, 1985.
27–208, September 5, 1989	1–16	Original	September 5, 1989.
27–209, October 20, 1989	1–11	Original	October 20, 1989.
29–109, Revision 1, September 22, 1978	1, 2, 4, 5, 7, 7A, 10, 19, 31–35.	1	September 22, 1978.
	3, 6, 8, 9, 11–18, 20–30, 32, 36.	Original	August 25, 1976.
29–125, Revision 2, October 23, 1987	1–22	2	October 23, 1987.
32–134, March 22, 1977	1–13	Original	March 22, 1977.
32–143, August 8, 1978	1–11	Original	August 8, 1978.
32–157, Revision 1, October 29, 1980	1–23	1	October 29, 1980.

This incorporation by reference was approved by the Director of the Federal Register in accordance with 5 U.S.C. 552(a) and 1 CFR part 51. Copies may be obtained from McDonnell Douglas Corporation, 3855 Lakewood Boulevard, Long Beach, California 90846, Attention: Technical Publications Business Administration, Department C1–L51 (2–60). Copies may be inspected at the FAA, Transport Airplane Directorate, 1601 Lind Avenue, SW., Renton, Washington; or at the FAA, Los Angeles Aircraft Certification Office, Transport Airplane Directorate, 3960 Paramount Boulevard, Lakewood, California; or at the Office of the Federal Register, 800 North Capitol Street, NW., suite 700, Washington, DC.

(e) This amendment becomes effective on August 18, 1995.

Issued in Renton, Washington, on June 23, 1995.

Darrell M. Pederson,

Acting Manager, Transport Airplane Directorate, Aircraft Certification Service.

[FR Doc. 95–15997 Filed 7–18–95; 8:45 am]

BILLING CODE 4910–13–U

INTERNATIONAL DEVELOPMENT COOPERATION AGENCY

Agency for International Development

22 CFR Part 211

[AID Regulation 11]

RIN 0412–AA–27

Transfer of Food Commodities for Use in Disaster Relief, Economic Development and Other Assistance—Booking Guidelines

AGENCY: Agency for International Development (USAID).

ACTION: Final rule.

SUMMARY: USAID is amending its regulations to provide that USAID may issue guidelines setting forth standard practices to be followed by Cooperating Sponsors for booking ocean freight under Public Law 480, title II food donation programs. Such guidelines are needed in order to ensure transparency, fairness, and effectiveness of such bookings. The guidelines themselves will not be included in the regulation; they are being developed in consultation with Cooperating Sponsors, forwarders, carriers, the Department of Agriculture and the Maritime Administration. The guidelines will set basic procedural standards for soliciting and evaluating freight quotations and provide certain standard contract provisions. They will not impose unnecessary burdens or restrictions on the operational flexibility and business judgment of Cooperating Sponsors and their forwarders.

EFFECTIVE DATE: August 18, 1995.

FOR FURTHER INFORMATION CONTACT: Robert M. Goldman, Chief, Transportation Division, Office of Procurement, USAID, Room 1442, SA–14, Washington, DC 20523–1419. Telephone: (703) 875–1300.

SUPPLEMENTARY INFORMATION: The regulation is being amended to provide that USAID may issue guidelines to be followed for booking Public Law 480, title II food donations. Such guidelines are needed in order to ensure transparency, fairness, and effectiveness of such bookings. The guidelines themselves will not be included in the regulation; they are being developed in consultation with Cooperating Sponsors, forwarders, carriers, the Department of Agriculture and the Maritime Administration. The guidelines will set basic procedural standards for soliciting and evaluating freight quotations and provide certain standard contract provisions. They will not impose unnecessary burdens or restrictions on the operational flexibility and business judgment of Cooperating Sponsors and their forwarders.

Modifications to the guidelines will be kept to a minimum, and will be issued only when determined to be

necessary to ensure the prudent expenditure of Federal funds. Legal requirement for prior notification of proposed changes to the booking guidelines will be fully complied with. Cooperating Sponsors may supplement the guidelines with additional measures and provisions they deem appropriate, as long as such additions are not inconsistent with the guidelines.

USAID has determined that this is not a significant regulatory action as defined in Executive Order 12866. This document will not have a significant economic impact on a substantial number of small entities under the Regulatory Flexibility Act, nor does it establish any collection of information as contemplated by the Paperwork Reduction Act.

List of Subjects in 22 CFR Part 211

Agricultural commodities, Disaster assistance, Foreign assistance program, Foreign aid, Non-profit organizations.

Accordingly, for the reasons set out in the preamble, 22 CFR part 211 is amended as follows:

PART 211—[AMENDED]

1. The authority citation for part 211 continues to read as follows:

Authority: Section 207(c) of the Agricultural Trade Development and Assistance Act of 1954, as amended; see Public Law 101–624, 104 Stat. 3632, 3641, 7 U.S.C. 1726a(c).

2. Section 211.4 is amended by adding a new paragraph (e)(3) to read as follows:

§ 211.4 Availability and shipment of commodities.

* * * * *

(e) * * *

(3) Cooperating sponsors awarding USAID-financed ocean transportation bookings of food aid under the Public Law 480, title II program shall follow consistent, transparent, fair and effective procedures. In order to promote these objectives, USAID may formulate, and from time-to-time amend, uniform standard booking guidelines relating to such bookings. Guidelines will be finalized only after consultation with affected cooperating sponsors, freight forwarders and carriers as required by the Agricultural Development and Trade Act of 1990 or other applicable legislation. Copies of the guidelines and any proposed amendments may be obtained from the Transportation Division, Office of Procurement, Agency for International Development, Washington, DC 20523.

* * * * *

Dated: April 14, 1995.

M. Douglas Stafford,

Assistant Administrator, Bureau for Humanitarian Response.

[FR Doc. 95–17132 Filed 7–18–95; 8:45 am]

BILLING CODE 6116–01–M

DEPARTMENT OF TRANSPORTATION

Federal Highway Administration

23 CFR Part 630

[FHWA Docket No. 95–10]

RIN 2125–AD59

Advance Construction of Federal-Aid Projects

AGENCY: Federal Highway Administration (FHWA), DOT.

ACTION: Interim final rule with request for comments.

SUMMARY: The FHWA is amending its regulation on advance construction of Federal-aid highway projects to incorporate changes made by the Dire Emergency Supplemental Appropriations Act, 1992, Pub. L. 102–302, 106 Stat. 248, and to provide more flexible funding arrangements for the States.

DATES: This interim final rule is effective July 19, 1995. Comments must be received by September 18, 1995.

ADDRESSES: All written, signed comments should refer to FHWA Docket No. 95–10, Room 4232, HCC–10, Office of the Chief Counsel, Federal Highway Administration, 400 Seventh Street SW., Washington, D.C. 20590. All comments received will be available for examination at the above address between 8:30 a.m. and 3:30 p.m., e.t., Monday through Friday, except Federal holidays. Those desiring notification of receipt of comments must include a self-addressed, stamped postcard.

FOR FURTHER INFORMATION CONTACT: Max I. Inman, Office of Fiscal Services, (202) 366–2853, or Steve M. Rochlis, Office of the Chief Counsel, (202) 366–0761, Federal Highway Administration, 400 Seventh Street SW., Washington, D.C. 20590. Office hours are from 7:45 a.m. to 4:15 p.m., e.t., Monday through Friday, except Federal holidays.

SUPPLEMENTARY INFORMATION: The Dire Emergency Supplemental Appropriations Act, 1992, Pub. L. 102–302, 106 Stat. 248, included a revision to section 115 of title 23, U.S.C., to authorize advance construction on surface transportation program projects and other technical changes.

Section 115 allows States to advance the construction of Federal-aid highway projects without requiring that Federal funds be obligated at the time the FHWA approves the project. States may proceed with projects using only State funds and then request that Federal funds be made available at a later time.

The Dire Emergency Supplemental Appropriations Act, 1992, made the following changes to 23 U.S.C. 115:

(a) Authorized advance construction on the surface transportation program, the national highway system, and congestion mitigation and air quality improvement program projects.

(b) Limited the amount which may be approved for advance construction to a State's expected apportionments.

In addition to the changes made by the Dire Emergency Supplemental Appropriations Act, 1992, the regulation is being revised to provide additional flexibility to the States by allowing partial conversions of advance construction instead of requiring the full amount to be converted at one time.

Section-by-Section Analysis

Section 630.701 Purpose

There are no changes to this section.

Section 630.703 Eligibility

This section is revised to authorize advance construction on the surface transportation program, the national highway system, congestion mitigation and air quality improvement programs, and delete references to the secondary, urban, rail-highway crossing, and hazard elimination programs which are no longer eligible for advance construction projects.

Section 630.705 Procedures

There are no changes to this section.

Section 630.707 Limitation

This section is revised to remove the previous limitation which provided States with a window (January 1, 1987 to September 30, 1990) in which advance construction projects could be approved for a State up to its expected apportionments plus an amount equal to one additional year of apportionment (except for Interstate construction), and to add the new limitation on advance construction approvals.

Section 630.709 Conversion to a Regular Federal-Aid Project

This section is revised to remove paragraph (b) and to redesignate paragraph (c) as (b). Removing paragraph (b) provides flexibility to the States when converting projects to regular funding by allowing partial conversions instead of requiring the full amount to be converted at one time, as paragraph (b) provided.

Section 630.711 Payment of Bond Interest

There are no changes to this section.

Rulemaking Notices and Analyses

With regard to the amendments made by this interim final rule in accordance with the Dire Emergency Supplemental Appropriations Act, the FHWA finds that prior notice and opportunity for comment are unnecessary under 5 U.S.C. 553(b)(3)(B) and that good cause exists to dispense with the 30-day delayed effective date ordinarily required under 5 U.S.C. 553(d) because these changes are statutorily mandated. Therefore, the FHWA is not exercising discretion in a way that could be meaningfully affected by public comment.

In addition, the amendment allowing States to partially convert advance construction projects to regular Federal-aid projects removes the restriction on such conversions which required the full Federal share of project costs to be converted at one time. Thus, this action ''grants or recognizes an exemption or relieves a restriction'' in accordance with 5 U.S.C. 553(d)(1) and therefore is exempted from the 30-day delayed effective date requirement.

In an April 8, 1994, **Federal Register** notice, the FHWA announced its Innovative Financing Test and Evaluation Project to provide incentives to encourage States, private investors, and the financial community to increase investment in surface transportation projects, 59 FR 16889. The modification to the advance construction conversion provision included in this interim final rule has been made at the request of several States in response to this project, and will provide States with the option of partially converting advance construction projects to regular Federal-aid projects; States may continue to fully convert projects if they would like to do so. Therefore, the FHWA has concluded that prior notice and opportunity for comment on this effort to provide more flexible funding arrangements for the States, at their request, are unnecessary under 5 U.S.C. 553(b)(3)(B).

For these reasons, the FHWA has also determined that prior notice and opportunity for comment are not required under the Department of Transportation's regulatory policies and procedures, as it is not anticipated that such action would result in the receipt of useful information. Therefore, the FHWA is proceeding directly to an interim final rule which is effective upon its date of publication.

Executive Order 12866 (Regulatory Planning and Review) and DOT Regulatory Policies and Procedures

The FHWA has determined that this action is not a significant action within the meaning of Executive Order 12866 or significant within the meaning of Department of Transportation regulatory policies and procedures. This rule affects the manner in which State highway agencies financially administer project obligations. This interim final rule will permit States to proceed with projects using only State funds and then request that Federal funds be made available at a later time. This amendment will provide States with an additional financing option which they may choose to use to more effectively manage their Federal apportionments. This rule will not result in a major increase in costs or prices for State or local governments and will not have an adverse effect on competition, employment, investment, productivity, innovation or on the ability to compete with foreign enterprises. It is anticipated that the economic impact of this rulemaking will be minimal; therefore, a full regulatory evaluation is not required.

Regulatory Flexibility Act

In compliance with the Regulatory Flexibility Act (5 U.S.C. 601–612), the FHWA has evaluated the effects of this rule on small entities.

This rulemaking is directed toward State governments, and it is initiated in order to implement a statutory mandate. The primary impact of this action will be to provide the States with additional flexibility in using advance construction procedures. Based on this evaluation, the FHWA hereby certifies that this action will not have a significant economic impact on a substantial number of small entities.

Executive Order 12612 (Federalism Assessment)

This action has been analyzed in accordance with the principles and criteria contained in Executive Order 12612, and it has been determined that this action does not have sufficient federalism implications to warrant the preparation of a federalism assessment. This rule does not impose additional costs or burdens on the States, including the likely source of funding for the States nor does it affect the ability of the States to discharge traditional State governmental functions. The primary intent of this rule is to provide the States with additional flexibility in using advance construction procedures.

Executive Order 12372 (Intergovernmental Review)

Catalog of Federal Domestic Assistance Program Number 20.205, Highway Planning and Construction. The regulations implementing Executive Order 12372 regarding intergovernmental consultation on Federal programs and activities apply to this program.

Paperwork Reduction Act

This action does not contain a collection of information requirement for the purpose of the Paperwork Reduction Act of 1980, 44 U.S.C. 3501–3520.

National Environmental Policy Act

The agency has analyzed this section for the purpose of the National Environmental Policy Act of 1969 (42 U.S.C. 4321 *et seq.*) and has determined that this action would not have any effect on the quality of the environment.

Regulation Identification Number

A regulation identification number (RIN) is assigned to each regulatory action listed in the Unified Agenda of Federal Regulations. The Regulatory Information Service Center publishes the Unified Agenda in April and October of each year. The RIN contained in the heading of this document can be used to cross reference this action with the Unified Agenda.

List of Subjects in 23 CFR Part 630

Bonds, Government contracts, Grant programs—transportation, Highways and roads, Reporting and recordkeeping requirements.

Issued on: July 11, 1995.

Rodney E. Slater,

Federal Highway Administrator.

In consideration of the foregoing, the FHWA is amending title 23, Code of Federal Regulations, chapter I, part 630 as set forth below.

PART 630—PRECONSTRUCTION PROCEDURES

1. The authority citation for part 630 is revised to read as follows and all other authority citations which appear throughout part 630 are removed:

Authority: 23 U.S.C. 101(a), 104, 105, 106, 109, 110, 113, 115, 118, 120(e), 121(c), 125, 134, 315, 320, and 402(a); 23 CFR 1.32, 630; and 49 CFR 1.48(b).

SUBPART G—[REVISED]

2. Subpart G of part 630 is revised to read as follows:

Subpart G—Advance Construction of Federal-Aid Projects

Sec.
630.701 Purpose.
630.703 Eligibility.
630.705 Procedures.
630.707 Limitation.
630.709 Conversion to a regular Federal-aid project.
630.711 Payment of bond interest.

Subpart G—Advance Construction of Federal-Aid Projects

§ 630.701 Purpose.

The purpose of this subpart is to prescribe procedures for advancing the construction of Federal-aid highway projects without obligating Federal funds apportioned or allocated to the State.

§ 630.703 Eligibility.

(a) The State Highway Agency (SHA) may proceed with a highway substitute, congestion mitigation and air quality improvement program, surface transportation program, bridge replacement and rehabilitation, or planning and research project in accordance with this subpart, provided the SHA:

(1) Has obligated all funds apportioned or allocated to it under 23 U.S.C. 103(e)(4)(H), 104(b)(2), 104(b)(3), 104(f), 144, or 307, as the case may be for the proposed project, or

(2) Has used all obligation authority distributed to it, or

(3) Demonstrates that it will use all obligation authority distributed to it.

(b) The SHA may proceed with a National Highway System (NHS) or Interstate project in accordance with this subpart without regard to apportionment or obligation authority balances. Interstate projects include Interstate construction and Interstate maintenance.

§ 630.705 Procedures.

(a) An advance construction project shall meet the same requirements and be processed in the same manner as a regular Federal-aid project, except,

(1) The FHWA authorization does not constitute any commitment of Federal funds on the project, and

(2) The FHWA shall not reimburse the State until the project is converted under § 630.709.

(b) Project numbers shall be identified by the letters ''AC'' preceding the regular project number prefix.

(c) If the SHA plans to claim bond interest costs under § 630.711, it shall include in its request for authorization the estimated federally participating bond interest cost.

(d) The SHA shall submit a final voucher to the FHWA upon completion of the project even though the project has not been converted. If the SHA is claiming bond interest costs under § 630.711, it shall certify on the final voucher that the bond proceeds were expended in the construction of the project and shall include a computation of the eligible interest costs.

§ 630.707 Limitation.

A request to approve an advance construction project is limited to a State's expected apportionment of authorized funds which are eligible to finance the project.

§ 630.709 Conversion to a regular Federal-aid project.

(a) The SHA may submit a written request to the FHWA that a project be converted to a regular Federal-aid project at any time provided that sufficient Federal-aid funds and obligation authority are available.

(b) Subsequent to FHWA approval the SHA may claim reimbursement for the Federal share of project costs incurred, provided the project agreement has been executed. If the SHA has previously submitted a final voucher, the FHWA will process the voucher for payment.

§ 630.711 Payment of bond interest.

(a) For Interstate projects authorized by the FHWA after January 6, 1983, and for Interstate 4R, Interstate maintenance, primary and NHS projects authorized by the FHWA after April 2, 1987, interest earned and payable on bonds issued by a State is an eligible cost of construction as follows:

(1) Participating interest cost is based on the actual expenditure of bond proceeds on the Federal-aid project. The interest on the bonds is applied to the amount of bond proceeds expended on the project from the date of expenditure.

(2) The amount of interest determined in paragraph (a)(1) of this section shall not exceed the estimated increase in the physical construction cost of the project which would have occurred had the project been authorized on the date of conversion. The estimated increase in the physical construction cost is determined by applying the increase, if any, in the national construction cost index in effect on the date of conversion over the index in effect on the date of the FHWA authorization, to the actual cost of physical construction.

(b) For Interstate projects under physical construction on January 1, 1983, and converted to a regular Federal-aid project after January 1, 1983, bond interest is eligible in accordance with paragraph (a)(1) of this section. The restriction in paragraph (a)(2) of this section does not apply.

[FR Doc. 95–17567 Filed 7–18–95; 8:45 am]
BILLING CODE 4910–22–P–M

DEPARTMENT OF THE TREASURY

Internal Revenue Service

26 CFR Part 1

[TD 8601]

RIN 1545–AS71

Definition of Club

AGENCY: Internal Revenue Service (IRS), Treasury.

ACTION: Final and temporary regulations.

SUMMARY: This document contains final and temporary regulations relating to the definition of a *club organized for business, pleasure, recreation, or other social purpose* for purposes of the disallowance of a deduction for club dues. The regulations reflect changes to the law made by the Omnibus Budget Reconciliation Act of 1993 and affect persons who pay or incur club dues.

DATES: These regulations are effective July 19, 1995.

For dates of applicability, see § 1.274–2 (a) and (e).

FOR FURTHER INFORMATION CONTACT: Michael L. Gompertz, (202) 622–4910 (not a toll-free number).

SUPPLEMENTARY INFORMATION:

Background

This document provides final and temporary Income Tax Regulations (26 CFR part 1) under section 274(a)(3) of the Internal Revenue Code of 1986 (Code). This provision was added by section 13210 of the Omnibus Budget Reconciliation Act of 1993 (107 Stat. 469).

On August 12, 1994, the IRS published a notice of proposed rulemaking defining *club* in the **Federal Register** (59 FR 41414). No public hearing on the proposed regulations was requested or held, but written comments were received. After consideration of all the comments, the proposed regulations are adopted by this Treasury decision with one minor editorial change in § 1.274–2(a)(2)(iii)(*b*).

On December 16, 1994, the IRS published a notice of proposed rulemaking in the **Federal Register** (59 FR 64909) relating, in part, to the tax treatment of payment by an employer of an employee's club dues. This Treasury decision has no effect on the notice of

proposed rulemaking published on December 16, 1994. Final regulations on this subject will be published at a later date.

Explanation of Provisions

Section 274(a)(3) of the Code disallows a deduction for amounts paid or incurred for membership in any club organized for business, pleasure, recreation, or other social purpose.

Under the final regulations, the dues disallowance provisions of section 274(a)(3) apply to any membership organization a principal purpose of which is to conduct entertainment activities for members or their guests or to provide members or their guests with access to entertainment facilities. The membership organizations subject to dues disallowance under the final regulations include, but are not limited to, country clubs, golf and athletic clubs, airline clubs, hotel clubs, and clubs operated to provide meals under circumstances generally considered to be conducive to business discussion. The dues disallowance provisions of section 274(a)(3) do not, in general, apply to (1) civic or public service organizations such as Kiwanis, Lions, Rotary, Civitan, and similar organizations; (2) professional organizations such as bar associations and medical associations; and (3) certain organizations similar to professional organizations, specifically, business leagues, trade associations, chambers of commerce, boards of trade, and real estate boards.

Under the final regulations, the three exceptions from dues disallowance listed above do not apply if a principal purpose of the organization is to conduct entertainment activities for members or their guests or to provide members or their guests with access to entertainment facilities.

A commentator on the proposed regulations requested clarification of the terms *entertainment* and *a principal purpose.* The term *entertainment* is defined in existing § 1.274–2(b)(1) and that definition applies for purposes of these final dues disallowance regulations. The final regulations do not provide any additional guidance with respect to determining whether a principal purpose of an organization is to conduct entertainment activities or provide access to entertainment facilities.

Two commentators objected to the proposed regulations' disallowance of all deductions for airline club dues. The commentators indicated that these clubs are used for business purposes, and little or no personal benefit is derived from airline club membership. However, the legislative history of section 274(a)(3) specifically provides that deductions are not allowed for airline club dues. Therefore, the final regulations do not change the proposed rule concerning airline clubs.

One commentator stated that the proposed regulations would permit taxpayers to deduct, as a business expense, dues paid to certain organizations described in section 501(c)(8) because the organizations are civic or public service organizations. The commentator requested that the regulations be amended to preclude a business expense deduction for these dues because the organizations are not formed for a business purpose but, rather, to promote charitable, philanthropic, patriotic, and educational activities.

The IRS and the Treasury believe that the regulations, as proposed, adequately address the commentator's concern. Section 274 and these regulations do not expand the category of items that are deductible as business expenses. Rather, section 274 disallows certain business expense deductions that would otherwise be allowable under section 162. If dues paid to certain section 501(c)(8) organizations are not deductible under section 162 because they are not ordinary and necessary business expenses, section 274 and these regulations do not make the dues deductible.

The final regulations are effective with respect to amounts paid or incurred after December 31, 1993.

Special Analyses

It has been determined that this Treasury decision is not a significant regulatory action as defined in EO 12866. Therefore, a regulatory assessment is not required. It has also been determined that section 553(b) of the Administrative Procedure Act (5 U.S.C. chapter 5) and the Regulatory Flexibility Act (5 U.S.C. chapter 6) do not apply to these regulations, and, therefore, a Regulatory Flexibility Analysis is not required. Pursuant to section 7805(f) of the Internal Revenue Code, the notice of proposed rulemaking preceding these regulations was submitted to the Small Business Administration for comment on its impact on small business.

Drafting Information: The principal author of these regulations is Michael L. Gompertz, Office of Assistant Chief Counsel (Income Tax and Accounting). However, other personnel from the IRS and Treasury Department participated in their development.

List of Subjects in 26 CFR Part 1

Income taxes, Reporting and recordkeeping requirements.

Adoption of Amendments to the Regulations

Accordingly, 26 CFR part 1 is amended as follows:

PART 1—INCOME TAXES

Paragraph 1. The authority citation for part 1 continues to read in part as follows:

Authority: 26 U.S.C. 7805 * * *

Par. 2. Section 1.274–2 is amended as follows:

1. Paragraph (a)(2)(ii) is revised.
2. Paragraph (a)(2)(iii) is added.
3. Paragraph (a)(3)(iii) is revised.
4. The heading of paragraph (e) and text for paragraph (e)(1) are revised.
5. Paragraph (e)(3)(ii) is revised.

The additions and revisions read as follows:

§ 1.274–2 Disallowance of deductions for certain expenses for entertainment, amusement, or recreation.

(a) * * *

(2) * * *

(ii) *Expenditures paid or incurred before January 1, 1979, with respect to entertainment facilities, or paid or incurred before January 1, 1994, with respect to clubs*—(*a*) *Requirements for deduction.* Except as provided in this section, no deduction otherwise allowable under chapter 1 of the Internal Revenue Code shall be allowed for any expenditure paid or incurred before January 1, 1979, with respect to a facility used in connection with entertainment, or for any expenditure paid or incurred before January 1, 1994, with respect to a club used in connection with entertainment, unless the taxpayer establishes—

(*1*) That the facility or club was used primarily for the furtherance of the taxpayer's trade or business; and

(*2*) That the expenditure was directly related to the active conduct of that trade or business.

(*b*) *Amount of deduction.* The deduction allowable under paragraph (a)(2)(ii)(*a*) of this section shall not exceed the portion of the expenditure directly related to the active conduct of the taxpayer's trade or business.

(iii) *Expenditures paid or incurred after December 31, 1993, with respect to a club*—(*a*) *In general.* No deduction otherwise allowable under chapter 1 of the Internal Revenue Code shall be allowed for amounts paid or incurred after December 31, 1993, for membership in any club organized for business, pleasure, recreation, or other

social purpose. The purposes and activities of a club, and not its name, determine whether it is organized for business, pleasure, recreation, or other social purpose. Clubs organized for business, pleasure, recreation, or other social purpose include any membership organization if a principal purpose of the organization is to conduct entertainment activities for members of the organization or their guests or to provide members or their guests with access to entertainment facilities within the meaning of paragraph (e)(2) of this section. Clubs organized for business, pleasure, recreation, or other social purpose include, but are not limited to, country clubs, golf and athletic clubs, airline clubs, hotel clubs, and clubs operated to provide meals under circumstances generally considered to be conducive to business discussion.

(*b*) *Exceptions.* Unless a principal purpose of the organization is to conduct entertainment activities for members or their guests or to provide members or their guests with access to entertainment facilities, business leagues, trade associations, chambers of commerce, boards of trade, real estate boards, professional organizations (such as bar associations and medical associations), and civic or public service organizations will not be treated as clubs organized for business, pleasure, recreation, or other social purpose.

(3) * * *

(iii) ''Expenditures paid or incurred before January 1, 1979, with respect to entertainment facilities or before January 1, 1994, with respect to clubs'', see paragraph (e) of this section, and

* * * * *

(e) *Expenditures paid or incurred before January 1, 1979, with respect to entertainment facilities or before January 1, 1994, with respect to clubs*—(1) *In general.* Any expenditure paid or incurred before January 1, 1979, with respect to a facility, or paid or incurred before January 1, 1994, with respect to a club, used in connection with entertainment shall not be allowed as a deduction except to the extent it meets the requirements of paragraph (a)(2)(ii) of this section.

* * * * *

(3) * * *

(ii) *Club dues*—(*a*) *Club dues paid or incurred before January 1, 1994.* Dues or fees paid before January 1, 1994, to any social, athletic, or sporting club or organization are considered expenditures with respect to a facility used in connection with entertainment. The purposes and activities of a club or organization, and not its name, determine its character. Generally, the phrase *social, athletic, or sporting club or organization* has the same meaning for purposes of this section as that phrase had in section 4241 and the regulations thereunder, relating to the excise tax on club dues, prior to the repeal of section 4241 by section 301 of Public Law 89–44. However, for purposes of this section only, clubs operated solely to provide lunches under circumstances of a type generally considered to be conducive to business discussion, within the meaning of paragraph (f)(2)(i) of this section, will not be considered social clubs.

(*b*) *Club dues paid or incurred after December 31, 1993.* See paragraph (a)(2)(iii) of this section with reference to the disallowance of deductions for club dues paid or incurred after December 31, 1993.

* * * * *

§ 1.274–5T [Amended]

Par. 3. In § 1.274–5T, the first two sentences of paragraph (c)(6)(iii) are amended by removing the language ''at any time'' in each sentence and adding the language ''before January 1, 1994,'' in its place.

Margaret M. Richardson,

Commissioner of Internal Revenue.

Approved: June 21, 1995.

Leslie Samuels,

Assistant Secretary of the Treasury.

[FR Doc. 95–17665 Filed 7–18–95; 8:45 am]

BILLING CODE 4830–01–U

---

26 CFR Parts 1 and 602

[TD 8599]

RIN 1545–AN55

Deductions for Transfers of Property

AGENCY: Internal Revenue Service (IRS), Treasury.

ACTION: Final regulations.

SUMMARY: This document contains final regulations concerning deductions for transfers of property. The regulations amend the special rule that required an employer to deduct and withhold income tax as a prerequisite for claiming a deduction for property transferred to an employee in connection with the performance of services. Under the former regulation, employers that failed to deduct and withhold income tax were denied a deduction even where the employee reported the income and paid the tax. The new rules permit service recipients to claim a deduction for the amount included in the service provider's gross income. The service provider will be deemed to have included an amount in gross income if the service recipient provides a timely Form W–2 or 1099, as appropriate. These regulations apply to all service recipients who transfer property in connection with the performance of services.

DATES: These regulations are effective July 19, 1995.

For dates of applicability, see § 1.83–6(a)(5).

FOR FURTHER INFORMATION CONTACT: Charles T. Deliee, telephone 202–622–6060 (not a toll-free number).

SUPPLEMENTARY INFORMATION:

Paperwork Reduction Act

The collection of information contained in these final regulations has been reviewed and approved by the Office of Management and Budget in accordance with the Paperwork Reduction Act (44 U.S.C. 3504(h)) under control number 1545–1448. The estimated annual burden of reporting will be reflected in the reporting requirements for Form 1099–MISC.

Comments concerning the accuracy of this burden estimate and suggestions for reducing this burden should be sent to the Internal Revenue Service, Attn: IRS Reports Clearance Officer, PC:FP, Washington, DC 20224, and to the Office of Management and Budget, Attn: Desk officer for the Department of the Treasury, Office of Information and Regulatory Affairs, Washington, DC 20503.

Background

On December 5, 1994, the IRS published in the **Federal Register** (59 FR 62370) proposed amendments to the income tax regulations (26 CFR part 1) under section 83(h) of the Internal Revenue Code (Code), which permits a deduction for property transferred in connection with the performance of services.

Three written comments were received from the public on the proposed regulations. No public hearing was held. After consideration of the written comments received, the proposed regulations are adopted by this Treasury decision with one technical clarification.

Explanation of Provisions

Under section 83(h) of the Code, in the case of a transfer of property to which section 83(a) applies, the person for whom services were provided may deduct an amount equal to the amount included in the service provider's gross income. In light of the difficulty that a service recipient may have in demonstrating that an amount has

actually been included in the service provider's gross income, the general rule in former § 1.83–6(a)(1) permitted the deduction for the amount ''includible'' in the service provider's gross income. Thus, the deduction was allowed to the service recipient even if the service provider did not properly report the includible amount. Where the service provider was an employee of the service recipient, however, the special rule in § 1.83–6(a)(2) provided that a deduction could be claimed only if the service recipient (employer) deducted and withheld income tax in accordance with section 3402. The special rule was designed to ensure that the service recipient's deduction was in fact offset by a corresponding inclusion in the service provider's gross income. The special rule was limited to employer-employee situations because in other situations there was no underlying withholding requirement upon which the deduction could be conditioned.

Taxpayers expressed concern that it was often difficult to satisfy the prerequisite that employers must deduct and withhold income tax from payments in kind as a condition for claiming a deduction. These regulations address this concern by eliminating this prerequisite, while still ensuring consistent treatment between service recipients and service providers as required by the statute. In addition, because the deduction no longer is conditioned on withholding, there no longer is a need to have different rules for those who receive services from employees and those who receive services from others.

Under these regulations, the former general rule and special rule are replaced by a revised general rule that more closely follows the statutory language of section 83(h). The service recipient is allowed a deduction for the amount ''included'' in the service provider's gross income. For this purpose, the amount included means the amount reported on an original or amended return or included in gross income as a result of an IRS audit of the service provider.

Because of the potential difficulty of demonstrating actual inclusion by the service provider, a special rule provides that, if the service recipient timely complies with applicable Form W–2 or 1099 reporting requirements under section 6041 (or 6041A), as appropriate, with respect to the amount includible in income by the service provider, the service provider is deemed to have included the amount in gross income for this purpose. Thus, the regulations allow the deduction without requiring the service recipient to demonstrate actual inclusion by the service provider. If a transfer meets the requirements for exemption from reporting for payments aggregating less than $600 in any taxable year, or is eligible for any other reporting exemption, no reporting is required in order for the service recipient to rely on the deemed inclusion rule.

In order to allow service recipients to take advantage of the deemed inclusion rule with respect to property transfers to all service providers, these regulations also permit service recipients to use the special rule in the case of transfers to corporate service providers. To that end, service recipients are permitted, solely for purposes of this rule, to treat the Form 1099 reporting requirements as applicable to transfers to corporate service providers in the same manner as those requirements apply to transfers to noncorporate service providers. Thus, if a service recipient who transferred property to a corporate service provider timely reports that income on Form 1099 (to both the service provider and the federal government), the service recipient is entitled to rely on the deemed inclusion rule in claiming a deduction for the amount of that income. If the transfer meets the requirements for exemption from reporting for payments aggregating less than $600 in any taxable year, or is eligible for any other reporting exemption applicable to a service provider that is not a corporation, no reporting is required in order for the service recipient to rely on the deemed inclusion rule.

The deemed inclusion rule may be used only by a service recipient whose compliance with applicable Form W–2 or 1099 reporting requirements is timely. Thus, for example, under the current reporting requirements, if amounts attributable to one or more section 83 transfers of property are includible in an employee's income in year 1 (and are not eligible for any reporting exemption), the employer generally is required to furnish the employee a Form W–2 reflecting that amount by January 31 of year 2 and generally is required to file a copy of the Form W–2 with the federal government by the last day of February of year 2. If the employer reports to the employee and the government in a timely manner, the employer can rely on the deemed inclusion rule to claim a deduction for the amount in year 1. If the employee's Form W–2 is not furnished until after January 31 of year 2 or the government's copy of Form W–2 is not filed until after the last day of February of year 2, the employer generally is required to demonstrate that the employee actually included the amount in income in order to support its deduction of the amount.

Under these regulations, a special rule applies with respect to an amount includible in an employee's or former employee's income by reason of a disqualifying disposition of stock that had been acquired pursuant to a statutory stock option. In the case of such a disposition, and solely for the purpose of determining whether an employer may use the deemed inclusion rule under these regulations, a Form W–2 or W–2c (as appropriate) will be considered timely if it is furnished to the employee or former employee, and filed with the federal government, by the date on which the employer files its tax return (including an amended return) claiming a deduction for that amount.

With respect to disqualifying dispositions, these regulations modify the conditions for an employer's deduction under section 83(h) in a manner that is not inconsistent with the guidance provided by Notice 87–49 (Changes to Incentive Stock Option Requirements by Section 321 of the Tax Reform Act of 1986), 1987–2 C.B. 355. These regulations are not intended to have any effect on the application of Notice 87–49 or the analysis contained therein, and therefore should not be viewed as constituting a reconsideration of Revenue Ruling 71–52, 1971–1 C.B. 278, within the meaning of Notice 87–49.

Three written comments were received from the public on the proposed regulations. One dealt specifically with the withholding requirements as they apply to disqualifying dispositions of stock received under an employee stock purchase plan and, therefore, is beyond the scope of this regulation. The remaining two comments generally applauded the proposed amendments, but they both expressed a concern that, even after elimination of the withholding requirement as a prerequisite for claiming a deduction under section 83(h), there remains a statutory requirement, under subtitle C, to withhold income tax from compensatory transfers of property. Both commentators suggested that regulations be published to exclude transfers of property in payment for services from the withholding requirements.

Treasury and the IRS have carefully considered the comments. However, section 3402 of the Code requires every employer making payment of wages to deduct and withhold income tax from the wages. Section 3401(a) (relating to the definition of wages for income tax

withholding purposes), section 3121(a) (relating to the definition of wages for FICA tax purposes), and section 3306(b) (relating to the definition of wages for FUTA tax purposes) of subtitle C all provide that ''wages'' means all remuneration ''including the cash value of all remuneration (including benefits) paid in any medium other than cash,'' except as specified otherwise in those sections. A transfer of property in connection with the performance of services is not one of the specified exceptions.

Therefore, although the withholding requirement is eliminated as a prerequisite for claiming a deduction, these regulations do not relieve the service recipient from any applicable withholding requirements of subtitle C or from the statutorily prescribed penalties or additions to tax for noncompliance with those requirements. Thus, for example, if an employer transferred to an employee property to which section 83 applies and failed to withhold income tax on the payment, the employer would be liable for the tax under section 3403. However, under section 3402(d), any tax liability assessed against the employer would be offset by any tax paid by the employee. In addition, nothing in these regulations relieves the service recipient from penalties or additions to tax for noncompliance with the requirements of section 6041 or 6041A (relating to information reporting) to the extent they otherwise apply.

These regulations are effective for deductions allowable for taxable years beginning on or after January 1, 1995. However, taxpayers may apply these regulations when claiming a deduction for any year not closed by the statute of limitations. For example, if substantially vested (within the meaning of § 1.83–3(b)) stock was transferred to an employee in 1992 upon the exercise of a nonstatutory stock option, and if the calendar year employer furnished a Form W–2 to the employee by January 31, 1993, reflecting the income generated by the transfer and filed the appropriate Form W–2 with the federal government by February 28, 1993, then the employer could apply these regulations to claim a deduction for 1992 for the amount of the income, even if the employer failed to withhold in accordance with section 3402 and could not demonstrate actual inclusion in income by the employee. If that employer did not claim a deduction for the amount of the income on its 1992 tax return, it could file an amended return for 1992 claiming such a deduction pursuant to these regulations, provided that 1992 is still an open year.

The proposed regulation that was published in the **Federal Register** on November 16, 1983 (48 FR 52079), proposing to amend the special rule in § 1.83–6(a)(2), was withdrawn by the Notice of Proposed Rulemaking published on December 5, 1994 (59 FR 62371).

Special Analyses

It has been determined that this Treasury decision is not a significant regulatory action as defined in EO 12866. Therefore, a regulatory assessment is not required. It has also been determined that section 553(b) of the Administrative Procedure Act (5 U.S.C. chapter 5) and the Regulatory Flexibility Act (5 U.S.C. chapter 6) do not apply to these regulations and, therefore, a Regulatory Flexibility Analysis is not required. Pursuant to section 7805(f) of the Code, the notice of proposed rulemaking preceding these regulations was submitted to the Chief Counsel for Advocacy of the Small Business Administration for comment on its impact on small business.

Drafting Information: The principal author of these regulations is Charles T. Deliee, Office of the Associate Chief Counsel (Employee Benefits and Exempt Organizations), IRS. However, personnel from other offices of the IRS and Treasury Department participated in their development.

List of Subjects

26 CFR Part 1

Income taxes, Reporting and recordkeeping requirements.

26 CFR Part 602

Reporting and recordkeeping requirements.

Adoption of Amendments to the Regulations

Accordingly, 26 CFR parts 1 and 602 are amended as follows:

Paragraph 1. The authority for part 1 continues to read in part as follows:

Authority: 26 U.S.C. 7805 * * *

Par. 2. Section 1.83–6 is amended as follows:

1. Paragraphs (a) (1) and (2) are revised.
2. Paragraph (a)(5) is added.
3. The revisions and addition read as follows:

§ 1.83–6 Deduction by employer.

(a) *Allowance of deduction*—(1) *General Rule*. In the case of a transfer of property in connection with the performance of services, or a compensatory cancellation of a nonlapse restriction described in section 83(d) and § 1.83–5, a deduction is allowable under section 162 or 212 to the person for whom the services were performed. The amount of the deduction is equal to the amount included as compensation in the gross income of the service provider under section 83 (a), (b), or (d)(2), but only to the extent the amount meets the requirements of section 162 or 212 and the regulations thereunder. The deduction is allowed only for the taxable year of that person in which or with which ends the taxable year of the service provider in which the amount is included as compensation. For purposes of this paragraph, any amount excluded from gross income under section 79 or section 101(b) or subchapter N is considered to have been included in gross income.

(2) *Special Rule*. For purposes of paragraph (a)(1) of this section, the service provider is deemed to have included the amount as compensation in gross income if the person for whom the services were performed satisfies in a timely manner all requirements of section 6041 or section 6041A, and the regulations thereunder, with respect to that amount of compensation. For purposes of the preceding sentence, whether a person for whom services were performed satisfies all requirements of section 6041 or section 6041A, and the regulations thereunder, is determined without regard to § 1.6041–3(c) (exception for payments to corporations). In the case of a disqualifying disposition of stock described in section 421(b), an employer that otherwise satisfies all requirements of section 6041 and the regulations thereunder will be considered to have done so timely for purposes of this paragraph (a)(2) if Form W–2 or Form W–2c, as appropriate, is furnished to the employee or former employee, and is filed with the federal government, on or before the date on which the employer files the tax return claiming the deduction relating to the disqualifying disposition.

* * * * *

(5) *Effective date*. Paragraphs (a)(1) and (2) of this section apply to deductions for taxable years beginning on or after January 1, 1995. However, taxpayers may also apply paragraphs (a)(1) and (2) of this section when claiming deductions for taxable years beginning before that date if the claims are not barred by the statute of limitations. Paragraphs (a) (3) and (4) of this section are effective as set forth in § 1.83–8(b).

* * * * *

PART 602—OMB CONTROL NUMBERS UNDER THE PAPERWORK REDUCTION ACT

Par. 3. The authority citation for part 602 continues to read as follows:

Authority: 26 U.S.C. 7805.

§ 602.101 [Amended]

Par. 4. In § 602.101, paragraph (c) is amended by adding the entry ''1.83–6 * * * 1545–1448'' in numerical order to the table.

Approved: June 19, 1995.

Margaret Milner Richardson,

Commissioner of Internal Revenue.

Leslie Samuels,

Assistant Secretary of the Treasury.

[FR Doc. 95–17494 Filed 7–18–95; 8:45 am]

BILLING CODE 4830–01–U

PENSION BENEFIT GUARANTY CORPORATION

29 CFR Part 2627

RIN 1212–AA77

Disclosure to Participants

AGENCY: Pension Benefit Guaranty Corporation.

ACTION: Final rule; correction.

SUMMARY: This document makes a clarifying correction to the final rule on disclosure to participants (29 CFR part 2627) that was published in the **Federal Register** of Friday, June 30, 1995 (60 FR 34412). The final regulations in that document implement a new notice requirement under section 4011 of the Employee Retirement Income Security Act of 1974, as amended by the Retirement Protection Act of 1994. The action is needed to clarify the final regulations.

EFFECTIVE DATE: July 31, 1995.

FOR FURTHER INFORMATION CONTACT: Harold J. Ashner, Assistant General Counsel, or Catherine B. Klion, Attorney, Office of the General Counsel, PBGC, 1200 K Street, NW., Washington, DC 20005–4026, 202–326–4024 (202–326–4179 for TTY and TDD).

SUPPLEMENTARY INFORMATION: The following correction is made to the final rule that was the subject of FR Doc. No. 95–16196, which was published Friday, June 30, 1995 (60 FR 34412). The final regulations in that document implement section 4011 of ERISA, which requires plan administrators of certain underfunded plans to provide notice to plan participants and beneficiaries of the plan's funding status and the limits on the PBGC's guarantee.

The PBGC is correcting § 2627.3 of the final regulations to make clear that a plan does not have to provide the Participant Notice for a plan year if it meets the DRC Exception Test in § 2627.3(b) for that plan year or for the prior plan year. Accordingly, on page 34414, in the second and third columns, paragraph (a) of § 2627.3 is corrected to read as follows:

§ 2627.3 Notice requirement.

(a) *General.* Except as otherwise provided in this part, the plan administrator of a plan must provide a Participant Notice for a plan year if a variable rate premium is payable for the plan under section 4006(a)(3)(E) of the Act and part 2610 of this chapter for that plan year, unless, for that plan year or for the prior plan year, the plan meets the Deficit Reduction Contribution (''DRC'') Exception Test in paragraph (b) of this section. The DRC Exception Test may be applied using the Small Plan DRC Exception Test rules in § 2627.4(b), where applicable.

* * * * *

Issued in Washington, DC, this 12th day of July 1995.

Martin Slate,

Executive Director, Pension Benefit Guaranty Corporation.

[FR Doc. 95–17713 Filed 7–18–95; 8:45 am]

BILLING CODE 7708–01–M

DEPARTMENT OF THE INTERIOR

Office of Surface Mining Reclamation and Enforcement

30 CFR Part 926

Montana Abandoned Mine Land Reclamation (AMLR) Plan

AGENCY: Office of Surface Mining Reclamation and Enforcement (OSM), Interior.

ACTION: Final rule; approval of amendment.

SUMMARY: OSM is approving a proposed amendment to the Montana AMLR plan (hereinafter referred to as the ''Montana plan'') under the Surface Mining Control and Reclamation Act of 1977 (SMCRA). Montana proposed the addition of new provisions to its AMLR plan that concern the reclamation of interim program and bankrupt surety bond forfeiture coal sites, future set-aside funds and an acid mine drainage program, and water treatment supply replacement project requirements. Montana also included in this amendment updated policies and procedures concerning purchasing, equal opportunity in employment, Americans With Disabilities Act, compliance with the National Oil and Hazardous Substances Contingency Plan, and coordination and consultation with other State and Federal agencies. The amendment is intended to incorporate the additional flexibility afforded by SMCRA, as amended by the Abandoned Mine Reclamation Act of 1990 (Pub. L. 101–508), and to improve operational efficiency.

EFFECTIVE DATE: July 19, 1995.

FOR FURTHER INFORMATION CONTACT: Guy Padgett, Casper Field Office, Telephone: (307) 261–5776.

SUPPLEMENTARY INFORMATION:

I. Background on Title IV of SMCRA

Title IV of SMCRA established an AMLR program for the purposes of reclaiming and restoring lands and waters adversely affected by past mining. The program is funded by a reclamation fee levied on the production of coal. Generally, lands and waters eligible for reclamation under Title IV are those that were mined or affected by mining and abandoned or inadequately reclaimed prior to August 3, 1977, and for which there is no continuing reclamation responsibility under State, Federal, or other laws. Lands and waters abandoned or inadequately reclaimed after August 3, 1977, are also eligible for reclamation under provisions at sections 402(g)(4) and 404 of SMCRA.

Title IV provides for State submittal to OSM of an AMLR plan. The Secretary of the Interior adopted regulations at 30 CFR 870 through 888 that implement Title IV of SMCRA. Under these regulations, the Secretary reviewed the plans submitted by States and solicited and considered comments of State and Federal agencies and the public. Based upon the comments received, the Secretary determined whether a State had the ability and necessary legislation to implement the provisions of Title IV. After making such a determination, the Secretary decided whether to approve the State program. Approval granted the State exclusive authority to administer its plan.

Upon approval of a State plan by the Secretary, the State may submit to OSM, on an annual basis, an application for funds to be expended by that State on specific projects that are necessary to implement the approved plan. Such annual requests are reviewed and approved by OSM in accordance with the requirements of 30 CFR part 886.

II. Background on the Montana Plan

On November 24, 1980, the Secretary of the Interior approved the Montana plan. General background information, including the Secretary's findings, the disposition of comments, and the approval of the Montana plan can be found in the November 24, 1980, **Federal Register** (45 FR 70445). Subsequent actions concerning Montana's plan and plan amendments can be found at 30 CFR 926.25.

III. Proposed Amendment

By letter dated March 22, 1995 (administrative record No. MT–AML–01), and memorandum dated April 5, 1995 (administrative record No. MT–AML–02), Montana submitted a proposed amendment to its AMLR plan pursuant to SMCRA. Montana submitted the proposed amendment at its own initiative to provide for the implementation of several initiatives established under the Abandoned Mine Reclamation Act of 1990 (Pub. L. 101–508). Montana proposed to revise its AMLR plan to allow abandoned mine reclamation funds to be used to reclaim interim program sites and insolvent surety coal mine sites meeting certain criteria where available funds are insufficient to provide for adequate reclamation or abatement at such site. Montana also proposed the addition of new provisions to allow setting aside up to 10 percent of the annual abandoned mine reclamation grants made to Montana to provide for restoration of eligible lands and waters after expiration of the Federal abandoned mine land program and implementation of an acid mine drainage program. Finally, Montana proposed to limit the expenditure of its allocated AMLR funds up to 30 percent for the purpose of protecting, repairing, replacing, constructing, or enhancing facilities relating to water supply, including water distribution facilities and treatment plants, and to replace water supplies adversely affected by past mineral mining practices. The amendment also contains updated policies and procedures concerning purchasing, equal opportunity in employment, Americans With Disabilities Act, compliance with the National Oil and Hazardous Substances Contingency Plan, and coordination and consultation with other State and Federal agencies.

OSM announced receipt of the proposed amendment in the April 25, 1995, **Federal Register** (60 FR 20251), provided an opportunity for a public hearing or meeting on its substantive adequacy, and invited public comment on its adequacy (administrative record No. MT–AML–013). Because no one requested a public hearing or meeting, none was held. The public comment period ended on May 25, 1995.

IV. Director's Findings

As discussed below, the Director, in accordance with SMCRA and 30 CFR 884.14 and 884.15, finds that the proposed Montana plan amendment as submitted by Montana on March 22, and April 5, 1995, is consistent with SMCRA and is in compliance with the corresponding Federal regulations at 30 CFR subchapter R. Thus, the Director approves the proposed amendment.

1. New Initiatives Submitted in Response to the Abandoned Mine Reclamation Act of 1990

a. *Reclamation of Interim Program and Bankrupt Surety Coal Sites.* Montana proposed to revise its AMLR plan by adding new language to provide—

(B) [a]bandoned coal mine sites mined after August 3, 1977, where bonds have been forfeited, may now be eligible for funding, if the Department [of Environmental Quality (DEQ), formerly the Department of State Lands (DSL)] makes either of the following findings:

(1) [t]he coal mining operation occurred during the period beginning on August 4, 1977, and ending on or before April 1, 1980, the date in which the Secretary [of the Interior] approved Montana's program pursuant to section 503 [of SMCRA], and funds for reclamation or abatement which are available pursuant to a bond or other form of financial guarantee or from any other source are not sufficient to provide for adequate reclamation or abatement at the site; or,

(2) [t]he coal mining operation occurred during the period beginning on August 4, 1977, and ending on or before November 5, 1990, the date of enactment of P.L. 101–508 [the Abandoned Mine Reclamation Act of 1990], and the surety of such mining operator became insolvent during such period, and funds immediately available from proceedings relating to such insolvency, or from any financial guarantee or other source are not sufficient to provide for adequate reclamation or abatement at the site.

[i]n determining which sites to reclaim, the Department shall follow the priorities stated in paragraphs (1) and (2) of Section 403 (a) of P.L. 95–87[SMCRA]. The Department shall ensure that priority is given to those sites which are in the immediate vicinity of a residential area or which have an adverse economic impact upon the community. As per the conditions of Montana's Certification of Completion of Coal Reclamation of Coal-Related Impacts (Federal Register July 9, 1990) [see 55 FR 28022; July 9, 1990] if a site is determined to be eligible under this initiative it must be reclaimed ahead of eligible non-coal projects.

At Section A, I(B)(1), Montana's proposed language cites April 1, 1990, as the date the Secretary approved Montana's regulatory program. Elsewhere in this amendment this date is correctly cited as April 1, 1980.

Section 402(g)(4) of SMCRA and the implementing Federal regulations at 30 CFR 874.12 (d) and (e) provide similar restrictions concerning the reclamation and abatement of interim program and bankrupt surety board forfeiture coal sites. According to the Federal requirements, such sites must have been mined for coal or affected by coal mining processes and the site was left in either an unreclaimed or inadequately reclaimed condition (1) between August 4, 1977, and the date on which the Secretary of the Interior approved a State's regulatory program pursuant to section 503 of SMCRA, and any funds pursuant to a bond or other financial guarantee or from any other source that would be available for reclamation and abatement are not sufficient to provide for adequate reclamation or abatement at the site, or (2) between August 4, 1977, and November 5, 1990, and the surety of the mining operator became insolvent during such period, and as of November 5, 1990, funds immediately available from proceedings relating to such insolvency or from any financial guarantee or other source are not sufficient to provide for adequate reclamation or abatement at the site. In addition, to qualify for reclamation or abatement, such sites must be either priority 1 or 2 sites pursuant to section 403(a) (1) and (2) of SMCRA. Priority will be given to those sites in the immediate vicinity of a residential area or which have an adverse economic impact upon a community.

The proposed language for reclamation and abatement of interim program and bankrupt surety bond forfeiture sites to be added to the Montana plan contains the same requirements as the counterpart Federal requirements at section 402(g)(4) of SMCRA and 30 CFR 870.12(d) and (e). Therefore, the Director finds that the proposed AMLR plan provisions are consistent with the counterpart Federal provisions. The Director approves the addition to the Montana AMLR Plan of the provisions concerning reclamation of interim program and bankrupt surety bond forfeiture site.

b. *Set-Aside Program.* Montana proposed to revise its AMLR plan by adding new language to provide—

C. [a]cid mine drainage (AMD) projects may now be eligible for funding. Montana may receive and retain up to 10 percent of the total of the grants made annually to Montana where such amounts are deposited into an acid mine drainage abatement and

treatment fund for use at eligible qualified hydrologic units.

In addition, in conjunction with the specific language concerning establishment of a separate fund to address acid mining drainage problems, Montana expanded its initiative concerning set-aside programs to allow for the use of up to 10 percent of the funds received by Montana under section 402(g)(1) of SMCRA to establish a special trust fund, where such funds together with the interest earned on the monies deposited to the fund, may be expended to achieve the priorities stated in section 403(a) after September 30, 1995.

Section 402(g) (6) and (7) of SMCRA and the implementing Federal regulations at 30 CFR Parts 873 and 876 provide similar requirements and procedures for the creation of a special account, together with the interest earned on the account, whereby a State or Tribe can set-aside up to 10 percent of the total of the grants made annually to such State or Tribe in either (1) a special trust fund established to achieve the priorities of section 403(a) of SMCRA after September 30, 1995, or (2) an acid mine drainage abatement and treatment (AMD) fund established to implement, in consultation with the National Resource Conservation Service [formerly the Soil Conservation Service], AMD plans approved by OSM.

The language concerning creation of a set-aside program proposed to be added to the Montana plan provides similar requirements as those provided in the counterpart Federal program at section 402(g) (6) and (7) of SMCRA and 30 CFR Parts 873 and 876. Therefore, the Director finds that the proposed AMLR plan provisions are consistent with the counterpart Federal provisions. The Director approves the addition to the Montana AMLR Plan of the provisions concerning set-aside programs.

c. *Water Supply Facilities and Water Replacement Provisions.* Montana proposed to revise its AMLR plan by adding new language to provide—

D. Montana may expend up to 30 percent of funds allocated in any year through grants made available under paragraph (1) of Section 402(g) [of SMCRA] for the purpose of protecting, repairing, replacing, constructing, or enhancing facilities relating to water supply, including water distribution facilities and treatment plants, to replace water supplies adversely affected by coal mining practices.

Section 403(b)(1) of SMCRA and the implementing regulations at 30 CFR 874.14(a) provide that States or Tribes not certified to the completion of coal reclamation may expend up to 30 percent of the funds made available under sections 402(g) (1) and (5) of SMCRA to such State or Tribe for the purpose of protecting, repairing, replacing, constructing, or enhancing facilities relating to water supply, including water distribution facilities and treatment plants, to replace water supplies adversely affected by coal mining practices. Under section 411 of SMCRA, where a State has certified to the completion of coal reclamation, there is no restriction placed on the funds used to address water supply facilities and water replacement. Montana certified to completion of all coal-related problems in the July 9, 1990, **Federal Register** (55 FR 28022). Therefore, the Director finds the proposed language to be added to Montana's plan concerning the limitation placed on funds used to replace water supplies adversely affected by coal mining practices is not inconsistent with section 403(b)(1) of SMCRA and 30 CFR 874.14(a). The Director approves the addition to the Montana AMLR Plan of the provisions concerning water replacement.

2. Administration and Management

Montana is adding Exhibit A to its plan to reflect changes in the organizational structure of the Montana DSL (now DEQ). The Federal regulations at 30 CFR 884.13(d)(1) require a State to provide a description of the administrative and management structure, including the organization of the designated agency conducting the State's reclamation program. The Director finds Montana's organizational changes to be consistent with the provisions of 30 CFR 884.13(d)(1) and approves the State's organization chart.

3. Policies and Procedures

With this amendment, Montana is clarifying its policies and procedures related to coordination with other agencies at Section A, III. Specifically, this section provides that the Montana DEQ consults and coordinates with Federal, State, and local agencies during project planning in order to insure compliance with environmental rules and regulations. Montana provided a list of critical elements requiring coordination. Agencies with which the Montana DEQ will consult include the State Historic Preservation Office, the Water Quality Bureau of the Montana Department of Health and Environmental Sciences, U.S. Army Corps of Engineers, local government planning offices and commissions, the Montana State Library Natural Resources Information System, U.S. Fish and Wildlife Service, the Montana Department of Fish, Wildlife, and Parks, U.S. Natural Resource Conservation Service, U.S. Forest Service, and the Bureau of Land Management.

The Federal regulations at 30 CFR 884.14(d)(1) require a State to provide a description of the relationship of the designated agency conducting the State's reclamation program to other State organizations or officials that will participate in or augment the designated agency's reclamation capacity.

In addition, Montana provides that the Montana DEQ will comply with the National Oil and Hazardous Substances Pollution Contingency Plan (NCP) when undertaking response actions on sites where the potential exists for the release of hazardous substances and pollutants. Montana's proposed language provides an explanation of the benefits of complying with the NCP and references NCP Section 300.430, which requires a detailed analysis of alternatives using distinct criteria divided into separate consideration categories.

The Director finds Montana's proposed addition of language to its AMLR plan that (1) Clarifies the required consultation and coordination between DEQ and the various State, Federal, and local agencies and governments to ensure compliance with environmental rules and regulations, and (2) requires compliance with NCP is consistent with 30 CFR 884.14(d)(1). The Director approves the addition of this section to Montana's AMLR plan.

4. Additional Contents of Montana's 1995 AMLR Plan Amendment

Exhibits B, C, and D of Montana's 1995 AMLR Plan amendment contain updates on policies and procedures concerning a supplemental legal opinion, equal employment policy and rules, handicapped person's preference rules, Americans With Disabilities Act transition plan with updates, and purchasing rules. These exhibits provide references to the following information pertaining to the Montana plan in general:

a. A designation by the Governor of the State that the Montana DSL (now DEQ) is the designated agency authorized to administer the State's reclamation program;

b. A legal opinion from the State Chief Legal Counsel that the designated agency has the authority under State law to conduct the Montana AMLR program in accordance with Title IV of SMCRA;

c. A description of the policies and procedures to be followed by the designated agency in conducting the reclamation program;

d. A description of the administrative and management structure to be used in

conducting the reclamation program; and

e. A general description of the reclamation activities to be conducted under the Montana reclamation plan;

Montana submitted these discussions to satisfy each of the requirements of 30 CFR 884.13. The Director finds that Exhibits B, C, and D satisfy the requirements of and are consistent with the Federal regulations at 30 CFR 884.13. The Director approves Exhibits B, C, and D of Montana's AMLR plan.

V. Summary and Disposition of Comments

Following are summaries of all substantive written comments on the proposed amendment that were received by OSM, and OSM's responses to them.

1. Public Comments

OSM invited public comments on the proposed amendment, but none were received.

2. Agency Comments

Pursuant to 30 CFR 884.15(a) and 884.14(a)(2), OSM solicited comments on the proposed amendment from various Federal agencies with an actual or potential interest in the Montana plan (administrative record No. MT–AML–03).

a. *U.S. Bureau of Mines (BOM).* BOM, Washington, D.C., responded on April 19, 1995, that its Division of Environmental Technology reviewed the amendment and had no comments to provide (administrative record No. MT–AML–08).

BOM, Western Field Operations Center, located in Spokane, Washington, responded on May 3, 1995, that it had reviewed the proposed amendment (administrative record No. MT–AML–011). BOM stated that it appeared that the amendment would allow Montana to redirect funds from non-coal reclamation to coal-related reclamation in a consistent, predictable manner. BOM stated further that, although SMCRA funds are intended primarily for coal-related reclamation, and the amendment supports that objective, some funds should probably continue to be spent on environmental problems at hardrock mine sites.

b. *U.S. Bureau of Indian Affairs (BIA).* BIA responded on April 25, 1995, that it had reviewed the subject amendment, and had no problem with the concept (administrative record No. MT–AML–010). However, BIA pointed out in its response that the ''set-aside'' funds should be available for on-reservation, as well as off-reservation, use when the need arises. OSM responds that funds collected from coal mined on Montana State lands are distributed to the State of Montana as State-share AMLR funds, while funds collected from coal mined on Indian lands are distributed to the appropriate Indian tribes. Montana's State-share funds would be available for use by Montana for reclamation activities on State lands. OSM administers the Federal program for surface coal mining and reclamation operations on Indian lands and provides through the Federal program funding for reclamation activities on Indian lands.

c. *U.S. Army Corps of Engineers.* By letter dated May 9, 1995, the U.S. Army Corps of Engineers stated that it reviewed the proposed amendment and found it to be satisfactory (administrative record No. MT–AML–012).

d. *Environmental Protection Agency (EPA) Concurrence and Comments.* OSM solicited EPA's concurrence and comments on the proposed amendment (administrative record No. MT–AML–04). EPA did not respond to OSM's request.

e. *Montana State Historic Preservation Officer (SHPO) and the Advisory Council on Historic Preservation (ACHP).* OSM solicited comments on the proposed amendment from the SHPO and the ACHP (administrative record No. MT–AML–03). ACHP did not respond to OSM's request. The SHPO responded on April 24, 1995 (administrative record No. MT–AML–09), that it understood the ''Policy and Procedures'' section of the proposed amendment to require that Montana DSL (now DEQ) will coordinate OSM consultation responsibilities with the Montana SHPO for section 106 of the National Historic Preservation Act of 1966 (NHPA) review. OSM notes that the language at Section A, III(A)(1) concerning ''Policies and Procedures'' requires the Montana DEQ to consult and coordinate with Federal, State, and local agencies during project planning in order to insure compliance with environmental rules and regulations and that NHPA is included in the list of critical elements requiring consultation (see finding No. 3).

The SHPO further stated that under section 106 of NHPA, OSM may use the services of the Montana DEQ to prepare necessary information, but OSM remains responsible for section 106 compliance. OSM concurs that in accordance with section 106 of NHPA, and absent any agreements to the contrary between OSM, the Montana SHPO, and the ACHP, OSM is the agency responsible for section 106 consultation in Montana.

The specific language at Section A, III(A)(1) in the proposed amendment requires that consultation under NHPA is with the Montana SHPO. OSM interprets this to mean that for Montana's AMLR program, Montana DEQ will consult with the Montana SHPO to the extent that DEQ has a role in the consultation process. As required under 30 CFR 884.14(d)(1), a State must provide a description of the relationship of the designated agency conducting the State's reclamation program to other State organizations or officials that will participate in or augment the designated agency's reclamation capacity. Accordingly, OSM reviewed the ''Policies and Procedures'' section of the proposed amendment in the context of the requirements at 30 CFR 884.14(d)(1) and determined that the consultation with the SHPO describes a specific relationship between the Montana DEQ and another State agency that will participate in or augment the capacity of the Montana DEQ in implementing Montana's AMLR program. OSM still remains responsible for consultation with the SHPO and ACHP under section 106 of NHPA. Therefore, in response to this comment, the Director requires no further changes to Montana's plan.

f. *Mine Safety and Health Administration (MSHA).* MSHA stated in its response dated June 2, 1995, that MSHA personnel had reviewed the amendment and it did not appear to conflict with any current MSHA regulations (administrative record No. MT–AML–16).

VI. Director's Decision

Based on the above findings, the Director approves Montana's proposed plan amendment as submitted on March 22 and April 5, 1995. The Director is also taking this opportunity to (1) provide an effective date for the approval of the Montana plan at 30 CFR 926.20, (2) change the name of the designated regulatory authority in Montana and correct the codification of the paragraphs within section 30 CFR 926.20 for the locations of the publicly available copies of the Montana plan, and (3) add a new section at 30 CFR 926.25 for amendments to the Montana plan.

As discussed in finding No. 1, the Director approves the provisions concerning (1) reclamation of interim program and bankrupt surety coal sites, (2) a set-aside program, and (3) water supply facilities and water replacement proposed to be added to Montana's AMLR Plan.

As discussed in finding No. 2, the Director approves Exhibit A concerning

the administration and management of Montana's reclamation program.

As discussed in finding No. 3, the Director approves the policies and procedures concerning consultation and coordination by the designated agency in administering Montana's AMLR program.

As discussed in finding No. 4, the Director approves Exhibits B, C, and D as additions to Montana's AMLR Plan.

The Director approves the proposed revisions of the Montana plan with the provision that they be fully promulgated in identical form to the plan amendment submitted to and reviewed by OSM and the public.

The Federal regulations at 30 CFR Part 926, codifying decisions concerning the Montana plan, are being amended to implement this decision. This final rule is being made effective immediately to expedite the State plan amendment process and to encourage States to bring their plans into conformity with the Federal standards without undue delay. Consistency of State and Federal standards is required by SMCRA.

VII. Procedural Determinations

1. Executive Order 12866

This rule is exempted from review by the Office of Management and Budget (OMB) under Executive Order 12866 (Regulatory Planning and Review).

2. Executive Order 12778

The Department of the Interior has conducted the reviews required by section 2 of Executive Order 12778 (Civil Justice Reform) and has determined that this rule meets the applicable standards of subsections (a) and (b) of that section. However, these standards are not applicable to the actual language of State AMLR plans and revisions thereof since each such plan is drafted and promulgated by a specific State, not by OSM. Decisions on proposed State AMLR plans and revisions thereof submitted by a State are based on a determination of whether the submittal meets the requirements of Title IV of SMCRA (30 U.S.C. 1231–1243) and the applicable Federal regulations at 30 CFR Parts 884 and 888.

3. National Environmental Policy Act

No environmental impact statement is required for this rule since agency decisions on proposed State AMLR plans and revisions thereof are categorically excluded from compliance with the National Environmental Policy Act (42 U.S.C. 4332) by the Manual of the Department of the Interior (516 DM 6, appendix 8, paragraph 8.4B(29)).

4. Paperwork Reduction Act

This rule does not contain information collection requirements that require approval by OMB under the Paperwork Reduction Act (44 U.S.C. 3507 *et seq.*).

5. Regulatory Flexibility Act

The Department of the Interior has determined that this rule will not have a significant economic impact on a substantial number of small entities under the Regulatory Flexibility Act (5 U.S.C. 601 *et seq.*). The State submittal which is the subject of this rule is based upon Federal regulations for which an economic analysis was prepared and certification made that such regulations would not have a significant economic effect upon a substantial number of small entities. Accordingly, this rule will ensure that existing requirements established by SMCRA or previously promulgated by OSM will be implemented by the State. In making the determination as to whether this rule would have a significant economic impact, the Department relied upon the data and assumptions in the analyses for the corresponding Federal regulations.

List of Subjects in 30 CFR Part 926

Intergovernmental relations, Surface mining, Underground mining.

Dated: July 13, 1995.

Richard J. Seibel,

Regional Director, Western Regional Coordinating Center.

For the reasons set out in the preamble, Title 30, Chapter VII, Subchapter T of the Code of Federal Regulations is amended as set forth below:

PART 926—MONTANA

1. The authority citation for Part 926 continues to read as follows:

Authority: 30 U.S.C. 1201 *et seq.*

2. Section 926.20 is revised to read as follows:

§ 926.20 Approval of Montana Abandoned Mine Land Reclamation Plan.

The Montana Abandoned Mine Land Reclamation Plan, as submitted on June 16, 1980, and as revised on July 28, 1980, is approved effective November 24, 1980. Copies of the approved plan are available at:

(a) Montana Department of Environmental Quality, 1625 Eleventh Avenue, Helena, MT 59620–1601.

(b) Office of Surface Mining Reclamation and Enforcement, Casper Field Office, 100 East B Street, Room 2128, Casper, WY 82601–1918.

3. Section 926.25 is added to read as follows:

§ 926.25 Approval of abandoned mine land reclamation plan amendments.

(a) The Montana AMLR Plan amendment, as submitted to OSM on April 20, 1983, and as revised on June 15, 1983, is approved effective September 19, 1983.

(b) Certification by Montana of completion of all known coal-related impacts, as submitted to OSM on December 27, 1989, is accepted effective July 9, 1990.

(c) The Montana AMLR Plan amendment, as submitted to OSM on March 22 and April 5, 1995, is approved effective July 19, 1995.

[FR Doc. 95–17715 Filed 7–18–95; 8:45 am]

BILLING CODE 4310–05–M

---

30 CFR Part 944

Utah Regulatory Program and Utah Abandoned Mine Land Reclamation (AMLR) Plan

AGENCY: Office of Surface Mining Reclamation and Enforcement (OSM), Interior.

ACTION: Final rule; approval of amendment.

SUMMARY: OSM is approving, with additional requirements, a proposed amendment to the Utah regulatory program and Utah AMLR plan (hereinafter referred to as the ''Utah program'' and the ''Utah plan'') under the Surface Mining Control and Reclamation Act of 1977 (SMCRA). The amendment consists of proposed revisions to the Utah Coal Mining and Reclamation Act of 1979. The revisions to the Utah program concern definitions of new terms; rulemaking authority and procedures; administrative procedures; Division of Oil, Gas and Mining (Division) action on permit applications; informal conferences; appeals and further review; release of performance bonds; revegetation standards on lands eligible for remining; operator requirements for underground coal mining; contest of violation or amount of penalty; violations of Utah's program or permit conditions; judicial review of rules and orders; repeal of specific sections of the Utah Code Annotated 1953; and repeal dates of certain provisions of the Utah program. The revisions to the Utah plan concern lands and water eligible for reclamation, recovery of reclamation costs, and liens against reclaimed lands. The amendment is intended to revise the Utah program to be consistent with the

Utah Administrative Procedures Act, and to revise the Utah program and Utah plan to be consistent with SMCRA, and improve operational efficiency.

EFFECTIVE DATE: July 19, 1995.

FOR FURTHER INFORMATION CONTACT: James F. Fulton, Chief, Denver Field Division, Western Regional Coordinating Center, Telephone: (303) 672–5524.

SUPPLEMENTARY INFORMATION:

I. Background on the Utah Program and the Utah Plan

On January 21, 1981, and June 3, 1983, the Secretary of the Interior conditionally approved the Utah program and approved the Utah plan. General background information on the Utah program and Utah plan, including the Secretary's findings, the disposition of comments, the conditions of approval of the Utah program, and approval of the Utah plan, can be found in the January 21, 1981, and June 3, 1983, publications of the **Federal Register** (46 FR 5899 and 48 FR 24876). Subsequent actions concerning Utah's program and program amendments can be found at 30 CFR 944.15, 944.16, and 944.30. Subsequent actions concerning Utah's plan amendments can be found at 30 CFR 944.25.

II. Proposed Amendment

By letter dated April 14, 1994, Utah submitted a proposed amendment to its program and plan pursuant to SMCRA (administrative record No. UT–917). The amendment consists of proposed revisions to the Utah Coal Mining and Reclamation Act of 1979. Utah submitted the proposed amendment in part to make its program and plan consistent with SMCRA and in part at its own initiative to make its program consistent with the Utah Administrative Procedures Act, thereby improving operational efficiency.

The Utah program provisions of the Utah Coal Mining and Reclamation Act of 1979 that Utah proposed to revise were: Utah Code Annotated (UCA) 40–10–2, purpose of Chapter 10; (2) UCA 40–10–3, definitions of new terms ''adjudicative proceeding,'' ''lands eligible for remining,'' and ''unanticipated event or condition;'' (3) UCA 40–10–6.5, rulemaking authority and procedure; (4) UCA 40–10–6.7, administrative procedures; (5) UCA 40–10–7, prohibition of financial interest in any coal mining operation; (6) UCA 40–10–8, coal exploration rules issued by the Division and penalty for violation; (7) UCA 40–10–10, permit applications; (8) UCA 40–10–11, Division action on the permit application; (9) UCA 40–10–12, revision or modification of permit provisions; (10) UCA 40–10–13, informal conferences; (11) UCA 40–10–14, permit approval or disapproval, appeals, and further review; (12) UCA 40–10–15, performance bonds; (13) UCA 40–10–16, release of performance bond, surety, or deposit; (14) UCA 40–10–17, revegetation standards on lands eligible for remining; (15) UCA 40–10–18, operator requirements for underground coal mining; (16) UCA 40–10–19, information provided by the permittee to the Division and right of entry; (17) UCA 40–10–20, contest of violation or amount of penalty; (18) UCA 40–10–21, civil action to compel compliance with Utah's program and other rights not affected; (19) UCA 40–10–22, violations of Utah's program or permit conditions; (20) UCA 40–10–24, determination of unsuitability of lands for surface coal mining; and (21) UCA 40–10–30, judicial review of rules or orders. Utah also proposed to repeal UCA 40–10–4, ''Mined land reclamation provisions applied,'' and UCA 40–10–31, ''Chapter's procedures supersede Title 63, Chapter 46b.'' Finally, Utah proposed to repeal UCA 40–10–11(5), modification of permit issuance prohibition, and UCA 40–10–17(2)(t)(ii), revegetation standards on lands eligible for remining, effective September 30, 2004.

The Utah plan provisions of the Utah Coal Mining and Reclamation Act of 1979 that Utah proposed to revise were: (1) UCA 40–10–25, lands and water eligible for reclamation; (2) UCA 40–10–27, entry upon land adversely affected by past coal mining practices, State acquisition of land and public sale, and water pollution control and treatment plants; and (3) UCA 40–10–28, recovery of reclamation costs and liens against reclaimed land.

OSM announced receipt of the proposed amendment in the May 12, 1994, **Federal Register** (59 FR 24675), provided an opportunity for a public hearing or meeting on its substantive adequacy, and invited public comment on its adequacy (administrative record No. UT–926). Because no one requested a public hearing or meeting, none was held. The public comment period ended on June 13, 1994.

During its review of the amendment, OSM identified concerns relating to the provisions of the Utah Coal Mining and Reclamation Act of 1979 at UCA 40–10–3(1), definition of ''adjudicative proceeding;'' UCA 40–10–4, applicability of provisions of UCA 40–8; UCA 40–10–6.7 and Utah Administrative Rule (Utah Admin. R.) 641–100–100, administrative procedures; UCA 40–10–11(3) schedule of applicant's mining law violations; UCA 40–10–11(5), remining operation violations resulting from unanticipated events or conditions; UCA 40–1013(2)(b), location of informal conferences; UCA 40–1014(6)(c), appeal to district court and further review; UCA 40–10–16(6), information conference or formal hearings concerning performance bond release decisions; UCA 40–10–18(4), damage resulting from underground coal mining subsidence; UCA 40–10–20(2)(e), contest of a violation or amount of a civil penalty; UCA 40–10–22(2)(b), cessation order, abatement notice or show cause order; UCA 40–10–22(3)(e), costs assessed against the permittee or any person having an interest that is or may be adversely affected by the notice or order of the Board of Oil, Gas and Mining (Board); and UCA 40–10–28 (1)(b) and (2)(b), recovery of reclamation costs and liens against reclaimed land. OSM notified Utah of the concerns by letter dated October 24, 1994 (administrative record No. UT–980).

Utah responded in a letter dated December 7, 1994, by submitting a revised amendment and additional explanatory information (administrative record No. UT–997). Utah proposed revisions to its Rules of Practice and Procedure of the Board at Utah Admin. R. 641–100–100, administrative procedures. Utah also proposed revisions to and additional explanatory information for UCA 40–10–14(6), appeal to district court and further review, UCA 40–10–4, mined land reclamation provisions applied, UCA 40–10–16(6), formal hearings or informal conferences, and UCA 40–10–22(2)(b), cessation orders, abatement notices, or show cause orders.

Based upon the revisions to and additional explanatory information for the proposed program and plan amendment submitted by Utah, OSM reopened the public comment period in the December 15, 1994, **Federal Register** (59 FR 64636, administrative record No. UT–1002). The public comment period ended on December 30, 1994.

III. Director's Findings

As discussed below, the Director, in accordance with SMCRA and 30 CFR 732.15 and 732.17, finds, with additional requirements, that the proposed program and plan amendment submitted by Utah on April 14, 1994, and as revised by it and supplemented with additional explanatory information on December 7, 1994, is no less effective than the corresponding Federal regulations and no less stringent than SMCRA. Accordingly, the Director approves the proposed amendment.

1. Nonsubstantive Revisions to Utah's Statutes

Utah proposed revisions to the following previously-approved statutes that are nonsubstantive in nature and consist of minor editorial, punctuation, grammatical, and recodification changes (corresponding SMCRA provisions are listed in parentheses):

UCA 40–10–2 (1) through (6), purpose (section 102 of SMCRA),

UCA 40–10–3 (2) through (7), (9) through (20), and (22), recodification of definitions for the terms ''alluvial valley floors,'' ''approximate original contour,'' ''Board,'' ''Division,'' ''imminent danger to the health and safety of the public,'' ''employee,'' ''operator,'' ''other minerals,'' ''permit,'' ''permit applicant,'' or ''applicant,'' ''permitting agency,'' ''permit area,'' ''permittee,'' ''person,'' ''prime farmland,'' ''reclamation plan,'' ''surface coal mining and reclamation operations,'' ''surface coal mining operations,'' and ''unwarranted failure to comply'' (sections 701 (1), (2), (8), (13) through (21), (28), (29), and (33) of SMCRA),

UCA 40–10–6.5 (2) and (3) [recodification], rulemaking procedures (section 505 of SMCRA),

UCA 40–10–7(1), prohibited financial interest in mining operations (section 201(f) of SMCRA),

UCA 40–10–8 (1) and (3), exploration rules issued by Division and penalty for violation (section 512 of SMCRA),

UCA 40–10–10(2), submission of application and reclamation plan (section 507 of SMCRA),

UCA 40–10–11 (1), (2) (a) through (d), (e)(ii), (f) (i) and (iii); and (4) (a) and (b), Division action on permit application, requirements for approval, and restoration of prime farmland (section 510 of SMCRA),

UCA 40–10–12(3), revision or modification of permit provisions (section 511(c) of SMCRA),

UCA 40–10–14 (2) and (3), notice to the applicant of approval or disapproval of the application and hearings (section 514 of SMCRA),

UCA 40–10–15(1), performance bonds (section 509(a) of SMCRA),

UCA 40–10–16(1), (3), and (6)(a), release of performance bond, surety, or deposit; action on application for relief of bond; and formal hearings or informal conferences (section 519 of SMCRA),

UCA 40–10–17(2)(g); (2)(j) (i)(B) and (ii) (A) and (B); (2)(m); (2)(o) and (o) (i), (iv), and (v); (2)(p) (i)(F), (ii), and (iii); (2)(t)(i); (2)(v)(viii); (3)(b) and (b)(ii); (3)(c); (4) (a) and (d); and (5), performance standards for all coal mining and reclamation operations, additional standards for steep-slope surface coal mining, and variances (section 515 of SMCRA),

UCA 40–10–18(1), (2)(i)(i)(B), (2)(j), and (5), underground coal mining, rules regarding surface effects, operator requirements for underground coal mining, and applicability of other chapter provisions (section 516 of SMCRA),

UCA 40–10–19(1) and (2)(a), information provided by the permittee to the Division and inspections by the Division (sections (517(b) and (b)(3) of SMCRA),

UCA 40–10–21(1)(a)(i) and (ii), (2)(a)(ii), and (5), civil action to compel compliance with chapter, jurisdiction, and other rights not affected (section 520 of SMCRA),

UCA 40–10–22 (1)(c) and (2)(a)(i), violation of chapter or permit conditions and inspections (section 521 of SMCRA),

UCA 40–10–24(1)(c) (i) (A), (B), (C), and (D), and (ii); (e) (i), (ii), and (iii); and (2) (a) and (b), determination of unsuitability of lands for surface coal mining, petitions, and public hearings (section 522 of SMCRA),

UCA 40–10–25(2) (d) and (e) [recodification] and (3) and (3)(a), AMLR program, expenditure priorities, and eligible lands and water (sections 402(g)(4), 403, and 404 of SMCRA), and

UCA 40–10–27 (5)(a) and (12)(b), entry upon land adversely affected by past coal mining practices and State acquisition of lands (sections 407(g) and 413 of SMCRA).

Because the proposed revisions to these previously-approved statutes are nonsubstantive in nature, the Director finds that these proposed Utah statutes are no less stringent than SMCRA. The Director approves these proposed statutes.

2. Substantive Revisions to Utah's Statutes That Are Substantively Identical to the Corresponding Provision of SMCRA

Utah proposed revisions to the following statutes that are substantive in nature and contain language that is substantively identical to the requirements of the corresponding SMCRA provisions (listed in parentheses).

UCA 40–10–3 (8) and (21), definitions for the terms ''lands eligible for remining'' and ''unanticipated event or condition'' (sections 701 (33) and (34) of SMCRA),

UCA 40–10–11(5) (b), and (c), Division action on permit application and requirements for approval (section 510(e) of SMCRA),

UCA 40–10–17(2)(t)(ii), performance standards for lands eligible for remining (section 515(b)(20)(B) of SMCRA),

UCA 40–10–22(1) (d), and (3) (a), (b), (d), and (f), violations of chapter or permit conditions; cessation orders, abatement notices, or show cause orders; suspension or revocation of permits; and reviews (sections 521(a)(4) and 525 (a)(1) and (a)(2) and (d) of SMCRA), and

UCA 40–10–25(2)(d) [deletion], 3(b), (4), (5), and (6), AMLR program and eligible lands and water (section 402(g)(4) of SMCRA).

Because these proposed Utah statutes are substantively identical to the corresponding provisions of SMCRA, the Director finds that they are no less stringent than SMCRA. The Director approves these proposed statute provisions.

3. UCA 40–10–3(1), Definition of ''Adjudicative Proceeding''

Utah proposed at UCA 40–10–3(1) a definition for the term ''adjudicative proceeding'' to mean ''a division or board action or proceeding that determines the legal rights, duties, privileges, immunities, or other legal interests of one or more identifiable persons, including all actions to grant, deny, revoke, suspend, modify, annul, withdraw, or amend an authority, right, permit, or license.'' This definition is similar to the definitions of the same term at existing UCA 63–46b–2(1)(a) as described at UCA 63–46b–1 of the Utah Administrative Procedures Act (UAPA) and Utah Admin. R. 641–100–200 of the Rules of Practice and Procedure of the Board, except that the proposed definition at UCA 40–10–3(1) does not contain the phrase ''and judicial review of all such actions.''

The term ''adjudicative proceeding'' is not specifically defined in the provisions of SMCRA or the Federal regulations at 30 CFR Chapter VII. Although there is no counterpart definition of ''adjudicative proceeding'' in SMCRA or the implementing Federal regulations, section 526(e) of SMCRA provides, in part, that ''[a]ction of the State regulatory authority pursuant to an approved State program shall be subject to judicial review by a court of competent jurisdiction in accordance with State law * * *.''

UCA 40–10–30, which is Utah's counterpart to 526(e) of SMCRA, establishes requirements for judicial review of any ''rule or order of the Board.'' However, the proposed definition at UCA 40–10–3(1) of ''adjudicative proceeding'' does not reference the judicial review provision at UCA 40–10–30(1), and by not specifically providing for ''judicial review of all such actions'' in the proposed definition, the implication is that judicial review is not included in ''adjudicative proceedings.'' The inconsistency between definitions of the same term within provisions of the Utah regulatory program and the lack of consistency between the provisions of UCA 40–10–3(1) and 40–10–30 were pointed out to Utah by OSM in its October 24, 1994, issue letter (issue No. 1). In order to be consistent with its own provisions at UCA 40–10–30(1), which do require judicial review of adjudicative proceedings, and with its other existing definitions of ''adjudicative proceedings'' at UCA 63–46b–2(1)(a), which is further clarified at UCA 63–46b–1, and Utah Admin. R. 641–100–200, Utah, in its December 7, 1994, response to OSM's issue letter,

stated that it would pursue the inclusion of judicial review in its definition of ''adjudicative proceeding'' at UCA 40–10–3(1) during its 1996 legislative session.

Therefore, the Director finds that Utah's proposed definition of ''adjudicative proceeding'' at UCA 40–10–3(1), while not inconsistent with the provisions of SMCRA because there is no Federal counterpart definition for this term, is inconsistent with the definition of the same term elsewhere at UCA 63–46b–2(1)(a), as clarified at UCA 63–46b–1, of the UAPA, and the implementing rules at Utah Admin. R. 641–100–200. With the requirement that Utah further revise its definition of ''adjudicative proceeding'' at UCA 40–10–3(1) to include judicial review of agency actions, the Director is approving Utah's proposed definition of ''adjudicative proceeding'' at UCA 40–10–3(1).

4. Repeal of UCA 40–10–4, Applicability of Provisions of UCA 40–8

Utah proposed to repeal its provisions at UCA 40–10–4, which concern the applicability of provisions of Title 40, Chapter 8 and its implementing rules at Utah Admin. R. Part 647 to the State's coal mining and reclamation operations. UCA 40–8 and Utah Admin. R. Part 647 pertain to the Utah Mined Land Reclamation Act and contain general reclamation standards for mining, principally for hard rock mining. There are no Federal SMCRA to either UCA 40–10–4 or 40–8.

The repeal of UCA 40–10–4 would appear to eliminate any applicability of the provisions of UCA 40–8 and Utah Admin. R. Part 647 to the Utah program. OSM notes, however, that UCA 40–10–6, which is not proposed for revision in this amendment, also references UCA 40–8. The language at UCA 40–10–6 provides that the Board and Division have powers, functions, and duties in addition to those provided in Title 40, Chapter 8, and that employees, agents, and contractors are authorized by the Board and Division to enter upon any property for the purpose of carrying out the provisions of Chapter 10 and Chapter 8, Title 40.

OSM, in its October 24, 1994, issue letter (issue No. 2), asked Utah to clarify whether the Board and Division derived some or all of their powers, functions, or duties necessary for the administration of Utah's coal program from provisions contained in UCA 40–8. Utah stated in its December 7, 1994, response to this issue that UCA 40–10–4 was proposed for deletion from the Utah Coal Mining and Reclamation Act in order to remove ambiguity from Utah's statute to clarify which, if any, of the UCA 40–8 provisions would apply to the State's coal regulatory program. Utah clarified further that the reference to UCA 40–8 at UCA 40–10–6 stems from the legislative branch awarding more powers in 1979 to the Board and Division and that such reference is only for historical purposes. Utah also stated that should there be provisions of UCA 40–8 or 40–6 which are discovered to apply to coal or which, when changed, would impact Utah's coal regulatory program, these provisions would be included in a program amendment.

Based upon the explanation provided by Utah and the State's assurance that the Board and Division do not derive powers needed to implement Utah's coal regulatory program from UCA 40–8, the Director finds that the deletion of the UCA 40–10–4 from the Coal Mining and Reclamation Act of 1979 is not inconsistent with SMCRA and approves the deletion of this statutory provision.

5. UCA 40–10–6.5 (1) and (3), Rulemaking Authority and Deletion of Administrative Procedures

Utah proposed the addition of new language at UCA 40–10–6.5(1) to provide that ''[t]he board shall promulgate rules under this chapter in accordance with Title 63, Chapter 46a, Utah Administrative Rulemaking Act [UARA].'' OSM, in the January 21, 1981, **Federal Register** (46 FR 5899), approved UARA provisions that were incorporated by Utah into its program as part of its original program submittal.

Section 503(a)(7) of SMCRA provides, in part, that ''[e]ach state * * * shall submit to the Secretary, * * * a State program which demonstrates that such State has the capability of carrying out the provisions of this Act and meeting its purposes through * * * rules and regulations consistent with regulations issued by the Secretary pursuant to this Act.''

The Director finds that the proposed addition at UCA 40–10–6.5(1) is not inconsistent with section 503(a)(7) of SMCRA and the Director approves the proposed addition of this statute.

In addition, Utah proposed to delete UCA 40–10–6.5(3) in its entirety. Existing UCA 40–10–6.5(3) provides that:

> [h]earings under this chapter shall be conducted in a manner which guarantees the parties' due process rights. This includes, but is not limited to, the right to examine any evidence presented to the [hearing] committee, the right to cross-examine any witness, and a prohibition of ex parte communication between any party and a member of the board.

Utah proposed at UCA 40–10–6.7(2)(b) the addition of similar provisions to those proposed for deletion (see finding No. 6). The Director finds that, with the proposed addition of similar language at UCA 40–10–6.7(2)(b), the deletion of UCA 40–10–6.5(3) is not inconsistent with SMCRA. The Director approves the deletion of this statute.

6. UCA 40–10–6.7 and Utah Admin. R. 641–100–100, Administrative Procedures

Utah proposed new administrative procedures at UCA 40–10–6.7 to provide:

> (1)(a) Informal adjudicative proceedings shall be conducted by the division under this chapter and shall be referred to as conferences or informal conferences.
>
> (b) The conduct of conferences shall be governed by rules adopted by the board which are in accordance with Title 63, Chapter 46b, Administrative Procedures Act [UAPA].
>
> (2)(a)(i) Formal adjudicative proceedings shall be conducted by the division or board under this chapter and shall be referred to as hearings or public hearings.
>
> (ii) The conduct of hearings shall be governed by rules adopted by the board which are in accordance with Title 63, Chapter 46b, Administrative Procedures Act [UAPA].
>
> (b) Hearings under this chapter shall be conducted in a manner which guarantees the parties' due process rights. This includes:
>
> (i) the right to examine any evidence presented to the board;
>
> (ii) the right to cross-examine any witness; and
>
> (iii) a prohibition of ex parte communication between any party and a member of the board.
>
> (c) A verbatim record of each public hearing required by this chapter shall be made, and a transcript made available on the motion of any party or by order of the board.

Although not explicitly stated in this provision, the Utah Admin. R. Parts 645 and 641 rules respectively apply to informal and formal adjudicative proceedings and provide clear direction on how formal and informal hearings are to be conducted. There are no specific counterpart provisions in SMCRA, however, as discussed in finding No. 5 above, Utah's proposed deletion of UCA 40–10–6.5(3) in its entirety and the addition of the deleted provisions at UCA 40–10–6.7(2)(b) and (b)(i), (ii), and (iii) provides hearing requirements that are not inconsistent with SMCRA and its implementing Federal regulations.

Utah, in this amendment, also proposed a revision to its Rules of Practice and Procedure of the Board at Utah Admin. R. 641–100–100 to add the phrase ''the Coal Program Rules'' in the

sentence ''[t]he rules for informal adjudicative proceedings are in the Coal Program Rules, the Oil and Gas Conservation Rules and the Mineral Rules.'' OSM previously approved the informal proceeding provisions of Utah Admin. R. 645 and formal proceeding provisions of Utah Admin. R. 641.

The Director finds that the addition of new administrative procedures at UCA 40–10–6.7 is not inconsistent with SMCRA. OSM wishes to clarify that any future rules implemented by Utah in accordance with UAPA must be revised and determined to be consistent with SMCRA. In addition, the Director finds that the proposed revision at Utah Admin. R. 641–100–100 referencing Utah's coal mining rules at Utah Admin. R. Part 645 is not inconsistent with SMCRA. Therefore, the Director approves the addition of UCA 40–10–6.7 and the revision of Utah Admin. R. 641–100–100.

7. UCA 40–10–11(3), Schedule of Applicant's Mining Law Violations and Pattern of Violations Determination

Utah proposed to revise UCA 40–10–11(3) to provide, in part:

> [t]he applicant shall file with his permit application a schedule listing any and all notices of violations of this chapter, any state or federal program or law approved under the Surface Mining Control and Reclamation Act of 1977, 30 U.S.C. Sec. 1201 et seq., and any law, rule, or regulation of the United States, State of Utah, or any department or agency in the United States pertaining to air or water environmental protection incurred by the applicant in connection with any surface coal mining operation during the three-year period prior to the date of application. * * * no permit shall be issued to an applicant after a finding by the board * * * that the applicant, or the operator specified in the application, controls or has controlled mining operations with a demonstrated pattern of willful violations of *this chapter* of such nature and duration with such resulting irreparable damage to the environment as to indicate an intent not to comply with the provisions of *this chapter.*

Emphasis added. As used by Utah in UCA 40–10–11(3), ''this chapter'' means UCA Title 40, Chapter 10.

Section 510(c) of SMCRA provides, in part, that (1) the applicant shall file with the permit application a schedule listing any and all notices of violations of, among other things, ''this Act;'' and (2) the permit shall not be issued after a finding that the applicant, or the operator specified in the application, controls or has controlled mining operations with a demonstrated pattern of willful violations of ''this Act'' of such nature and duration with such resulting irreparable damage to the environment as to indicate an intent not to comply with the provisions of ''this Act.'' The reference to ''this Act'' in section 510(c) of SMCRA includes SMCRA, the implementing Federal regulations, and all State and Federal programs approved under SMCRA. (*See* 48 FR 44344, 44389, September 28, 1983. *See also* 53 FR 38868, 38882–38883, October 3, 1988.)

With regard to the first sentence of UCA 40–10–11(3) that requires that the permit application contain a schedule listing any and all notices of violations, the provision encompasses violations of all State and Federal programs approved under SMCRA, but it does *not* encompass violations of SMCRA itself or violations of the implementing Federal regulations. With regard to the portion of UCA 40–10–11(3) that deals with the pattern of violations, ''this chapter'' encompasses only violations of the State statute. It does *not* encompass violations of SMCRA, the implementing Federal regulations, any State and Federal programs enacted under SMCRA, or other provisions of the approved Utah program.

OSM discussed these issues in its October 24, 1994, issue letter to Utah (issue No. 4). Utah agreed in its December 7, 1994, response to OSM's issue letter that UCA 40–10–11(3) needed to be revised in accordance with the deficiencies identified in OSM's issue letter. Utah stated that it would, in its 1996 legislative session, pursue the changes to UCA 40–10–11(3).

Based upon the above, the Director, with the requirement that Utah revise UCA 40–10–11(3) to require that (1) the schedule of the applicant's mining law violations required in connection with a permit application includes violations of SMCRA and the implementing Federal regulations and (2) the pattern of violations determination discussed therein includes violations of SMCRA, the implementing Federal regulations, any State or Federal programs enacted under SMCRA, and other provisions of the approved Utah program, finds UCA 40–10–11(3) to be no less stringent than section 510(c) of SMCRA. The Director approves the proposed revisions at UCA 40–10–11(3).

8. UCA 40–10–11(5)(a), Remining Operation Violations Resulting From Unanticipated Events or Conditions

Proposed UCA 40–10–11(5)(a) provides that the prohibition of UCA 40–10–11(3), which limits the issuance of a permit for violations (discussed above at finding No. 7), does not apply to a permit application after October 14, 1992, if the violation resulted from an unanticipated event or condition that occurred at a surface coal mining operation on lands eligible for remining under a permit held by the person making the application. This provision is similar to section 510(e) of SMCRA, except that section 510(e) of SMCRA applies after the date of enactment of the Energy Policy Act of 1992, which was October 24, 1992. OSM discussed the difference in dates in its October 24, 1994, issue letter to Utah (issue No. 4). Utah stated in its December 7, 1994, response to OSM's issue letter that the October 14 date at UCA 40–10–11(5)(a) is a typographical error and that the correct date should be October 24.

With the requirement that Utah revise UCA 40–10–11(5)(a) to reflect an effective date of ''after October 24, 1992,'' the Director finds UCA 40–10–11(5)(a) to be no less stringent than section 510(e) of SMCRA. The Director approves proposed UCA 40–10–11(5)(a).

9. UCA 40–10–13(2)(b), Location of Informal Conferences

Existing UCA 40–10–13(2)(b) states that, if a person files written objections on an initially-proposed or revised mine permit application, the Division shall hold an informal conference within a reasonable time of the receipt of the objections or request. Utah proposed to revise this rule to further state, among other things, that:

> [t]he conference shall be informal and shall be conducted in accordance with the procedures described in Subsection (b), irrespective of the requirements of Section [UCA] 63–46b–5, Administrative Procedures Act. The conference *may* be held in the locality of the coal mining and reclamation operation if requested within a reasonable time after written objections or the request for an informal conference are received by the division.

Emphasis added. The procedures described in subsection (b) of UCA 40–10–13(2) are consistent with the procedures for informal conferences established by section 513(b) of SMCRA, except that SMCRA requires that the regulatory authority *shall* hold an informal conference in the locality of the proposed mining, if requested within a reasonable time of the receipt of such written objections or the request.

Because Utah did not submit any rationale for this statute, it is not clear what it intended with the use of the word ''may'' instead of ''shall.'' It is possible that Utah intended, as section 513(b) of SMCRA requires, that the Division would always hold an informal conference in the locality of the proposed mining when requested within a reasonable time after receipt of the objections or request. However, the use of the word ''may'' in the proposed

statute would appear to allow Utah discretion to not hold the informal conference in the locality of the proposed mining even when the Division receives a request to do so within a reasonable time. The Director finds that UCA 40–10–13(2)(b), to the extent that the first sentence of the proposed new language at this statute requires that the conference be informal and be conducted in accordance with the procedures for informal conferences, is no less stringent than section 513(b) of SMCRA, and approves this part of the statute. However, to the extent that the second sentence Utah proposed to add at UCA 40–10–13(2)(b) allows the Division to possibly not hold the informal conference in the locality of the coal mining and reclamation operation when such conference is requested within a reasonable time, the Director finds UCA 40–10–13(2)(b) is less stringent than section 513(b) of SMCRA. Utah stated in its December 7, 1994, response to OSM's October 24, 1994, issue letter (issue No. 6), that it would pursue a change from the discretionary ''may'' in holding the informal conference in the locality of the mining operation to a mandatory ''shall'' in its 1995 legislative session.

Therefore, with the requirement that Utah revise UCA 40–10–13(2)(b) to change the word ''may'' to ''shall'' in the sentence that begins ''[t]he conference may be held in the locality of the coal mining and reclamation operation * * *,'' the Director finds UCA 40–10–13(2)(b) to be no less stringent than section 513(b) of SMCRA. The Director approves the proposed revisions at UCA 40–10–13(2)(b).

10. UCA 40–10–14(6), Appeal to District Court and Further Review

In response to the required amendment at 30 CFR 944.16(b) (September 27, 1994; 59 FR 49185, 49186; finding No. 3), which required Utah to alleviate a discrepancy in the requirements addressing the jurisdiction of the Utah Supreme Court and the State district courts, and at its own initiative, Utah proposed to revise UCA 40–10–14(6). Specifically, Utah proposed that:

(a) *[a]n* applicant or person with an interest which is or may be adversely affected who has participated in the proceedings [to determine whether a permit should be issued] as an objector, and who is aggrieved by the decision of the board, *may appeal the decision of* the board *directly to the Utah Supreme Court.*

(b) *[i]f the board* fails to act within the time limits specified in this chapter [UCA Title 40, Chapter 10], *the applicant or any person with an interest which is or may be adversely affected, who has requested a hearing in accordance with Subsection (3), may bring an action in* the district court for the county in which the proposed operation is located.

(c) *[a]ny party to the action in district court may appeal from the final judgment, order, or decree of the district court.*

(d) *[t]ime frames for appeals under Subsections (6) (a) through (c) shall be consistent with applicable provisions in Section 63–46–14, Administrative Procedures Act.*

(Italics indicate new language proposed to be added to this statute.) Utah also proposed the deletion of the provision at UCA 40–10–14(6)(b) that required that ''[r]eview of the adjudication of the district court is by the [Utah] Supreme Court.''

Section 526(e) of SMCRA provides, in pertinent part, that actions of the State regulatory authority pursuant to an approved State program are subject to judicial review by a court of competent jurisdiction in accordance with State law.

The Director finds that Utah's proposed procedures for further review and appeal of decisions concerning permit applications at UCA 40–10–14(6) are consistent with and no less stringent than the judicial review requirements of section 526(e) of SMCRA. Therefore, the Director approves proposed UCA 40–10–14(6). The Director also notes that the proposed revisions at UCA 40–10–14(6) satisfy the required amendment at 30 CFR 944.16(b) (59 FR 49185, 49186; September 27, 1994; finding No. 3), which required Utah to amend this statute to eliminate inconsistencies regarding appellate procedures. Accordingly, the Director is removing the required amendment at 30 CFR 9434.16(b).

11. UCA 40–10–16(6) (b) through (d), Informal Conferences or Formal Hearings Pertaining to Performance Bond Release Decisions

Utah proposed to delete its procedural requirements pertaining to bond release decisions at UCA 40–10–16(6) (b) through (d) and to replace them with a reference in UCA 40–10–16(6)(d) to the Board's Rules of Practice and Procedure, which are at Utah Admin. R. Part 641. Existing UCA 40–10–16(6) is substantively identical to the provisions of sections 519 (f), (g), and (h) of SMCRA, which provides, in pertinent part, the requirements for advertising notice of a hearing, establishing an informal conference to resolve written objections, gathering evidence, and compiling a verbatim record and making a transcript available.

The procedural requirements at sections 519 (f), (g), and (h) of SMCRA are contained in the referenced Rules of Practice and Procedure of the Board at Utah Admin. R. Part 641. In addition, Utah has clarified, that for the purposes of UCA 40–10–16(6), all of the provisions of Utah Admin. R. Part 641 apply to hearings held for the purpose of bond release.

There is no counterpart provision in SMCRA similar to Utah's provision at UCA 40–10–16(6)(c) that allows an informal conference to be converted to a formal proceeding under the standards set forth at UCA 63–46b–4 of UAPA. OSM requested in its October 24, 1994, issue letter (issue No. 8) that Utah verify that all procedural requirements accompanying a formal hearing will occur prior to continuing the conference as a formal proceeding when an informal conference is converted to a formal proceeding under UCA 63–46b–4. Utah responded in its December 7, 1994, letter that when a hearing is converted to a formal proceeding from an informal proceeding, all of the requirements of a formal proceeding apply.

Based upon Utah's assurances that the provisions of Utah Admin. R. Part 641, Rules of Practice and Procedure of the Board, provide for counterpart requirements to sections 519 (f), (g), and (h) of SMCRA, apply to bond release hearings, and that, when an informal hearing is converted to a formal hearing, the requirements of a formal proceeding apply, the Director finds that the revisions proposed by Utah at UCA 40–10–16(6) are no less stringent than sections 519 (f), (g), and (h) of SMCRA. The Director approves the revised statute.

12. UCA 40–10–18(4) (a) through (c), Damage Resulting From Underground Coal Mining Subsidence

Utah proposed new language at UCA 40–10–18(4) (a) through (c) to provide:

(a) [u]nderground coal mining operations conducted after October 24, 1994, shall be subject to the following requirement: The permittee shall promptly repair, or compensate for, material damage resulting from subsidence caused to any occupied residential dwelling and related structures of noncommercial building due to underground coal mining operations. Repair of damage will include rehabilitation, restoration, or replacement of the damaged occupied residential dwelling and related structures of noncommercial building. Compensation shall be provided to the owner of the damaged occupied residential dwelling and related structures or noncommercial building and will be in the full amount of the diminution in value resulting from the subsidence. Compensation may be accomplished by the purchase, prior to mining, of a noncancellable premium prepaid insurance policy.

(b) [n]othing in Subsection (4) shall be construed to prohibit or interrupt underground coal mining operations.

(c) [w]ithin one year after the date of enactment of Subsection (4), the board shall adopt final rules to implement Subsection (4).

The proposed language at UCA 40–10–18(4)(a) is substantively identical to the language provided at section 720(a)(1) of SMCRA, which requires repair or compensation for material damage to certain structures resulting from subsidence due to underground coal mining. Therefore, the Director finds that UCA 40–10–18(4)(a) is no less stringent than SMCRA and approves the statute.

The proposed language at UCA 40–10–18(4)(b) is identical to the last sentence of section 720(a)(2) of SMCRA, which provides that ''[n]othing in this section shall be construed to prohibit or interrupt underground coal mining operations.'' This proposed language is consistent with section 720(a)(2) of SMCRA and the Director approves it. However, UCA 40–10–18(4)(b) lacks a counterpart provision to the first sentence of section 720(a)(2), which requires the prompt replacement of any drinking, domestic, or residential water supply from a well or spring in existence prior to the application for a surface coal mining and reclamation permit, which has been affected by contamination, diminution, or interruption resulting from underground coal mining operations. As stated in the March 31, 1995, **Federal Register** final rule (60 FR 16722, 16745), if the Director determines that certain State program provisions should be amended in order to be made no less effective that the revised Federal rules, the individual States will be notified in accordance with the provisions of 30 CFR 732.17. For Utah, this may mean that a 30 CFR part 732 issue letter may be written if a determination is made that Utah's program is less effective than the Federal rules concerning the protection of water supplies affected by underground coal mining operations.

The proposed language at UCA 40–10–18(4)(c) is Utah's counterpart provisions to section 720(b) of SMCRA, which requires the promulgation, after providing notice and an opportunity for public comment, of final regulations to implement the subsidence provisions of section 720 of SMCRA. The Director finds that UCA 40–10–18(4)(c) is no less stringent than section 720(b) of SMCRA and approves it.

13. UCA 40–10–20(2)(e)(ii), Contest of Violation or Amount of Civil Penalty

In response to the Director's previous finding that UCA 40–10–20(3) was less stringent than section 518(c) of SMCRA, and the Director's deferred decision on this statutory provision (September 27, 1994; 59 FR 49185, 49187; finding No. 5), Utah proposed to create UCA 40–10–20(2)(e)(ii) to require that, if the operator charged with a violation fails to forward the amount of the penalty to the Division within 30 days of receipt of the results of an informal conference, the operator waives any opportunity ''for further review of the violation or to contest the violation.''

Section 518(c) of SMCRA provides, in part, that failure of the operator to forward the amount of the penalty to the Secretary of the Interior within 30 days shall result in a waiver of all legal rights to contest the violation or the amount of the penalty. Utah's proposed phrase ''for further review of the violation or to contest the violation'' addresses an operator's waiver of the right to contest the fact of the violation, but does not address an operator's waiver of the right to contest the amount of the civil penalty.

The Director finds UCA 40–10–22(2)(e)(ii) to be less stringent than section 518(c) of SMCRA to the extent that it does not preclude an operator from contesting the amount of the penalty when the operator does not forward the amount of the civil penalty to the Division within 30 days of the operator's receipt of the results of the informal conference. Utah stated in its December 7, 1994, response to OSM's October 24, 1994, issue letter (issue No. 10) that it would pursue clarification in its 1996 legislative session of what is waived when an operator fails to forward the amount of the penalty to the Division.

Therefore, with the requirement that Utah revise UCA 40–10–20(2)(e)(ii) to provide for a waiver of the operator's right to contest the amount of the civil penalty when the operator fails to forward the amount of the penalty to the regulatory authority within 30 days of receipt of the results of the informal conference, the Director finds UCA 40–10–20(2)(e)(ii) to be no less stringent than section 518(c) of SMCRA. The Director approves the proposed statute.

14. UCA 40–10–22(2)(b), Cessation Orders, Abatement Notices, and Show Cause Orders

Utah proposed at UCA 40–10–22(2)(b), among other things, that any relief granted by a State district court to enforce an order pursuant to UCA 40–10–22(2)(a)(i) shall continue in effect until the completion or final termination of all proceedings for review of such order, unless prior to completion or termination, the Utah Supreme Court on review grants a stay of enforcement or sets aside or modifies the Board's order that is being appealed.

Section 521(c) of SMCRA provides that, under similar circumstances, any relief granted by the Federal district court shall continue in effect until completion or final termination of all proceedings for review of such order, unless prior thereto, the district court granting such relief sets it aside or modifies it. Section 521(d) of SMCRA requires that an approved State program contain the same or similar procedural requirements relating to the enforcement provisions of section 521 of SMCRA.

OSM requested in its October 24, 1994, issue letter that Utah clarify whether the provisions of UCA 40–10–22(2)(b) allow the State district court to set aside or modify its own relief as section 521(d) of SMCRA does (issue No. 11). Utah stated in its December 7, 1994, response to OSM's issue letter that State law provides for the Utah Supreme Court to be the authority for modifying or setting aside a Board order or decision, and that, to the extent that any judicial body can reconsider its own order or decision, the State district court can also modify or set aside its own order or decision.

Based upon Utah's explanation of its rationale for the proposed revisions at UCA 40–10–22(2)(b), the Director finds that this provision is consistent with the provisions of section 521(c) of SMCRA. The Director approves the proposed revisions to UCA 40–10–22(2)(b).

15. UCA 40–10–22(3)(e), Costs Assessed Against Either Party Adversely Affected by the Board's Notice or Order

Utah proposed to revise UCA 40–10–22(3)(e) to provide:

[w]henever an order is entered under this section or as a result of any adjudicative proceeding under this chapter, at the request of any person, a sum equal to the aggregate amount of all costs and expenses (including attorney fees) as determined by the board to have been reasonably incurred by that person in connection with his participation in the proceedings, including any judicial review of agency actions, may be assessed against either party as the court, resulting from judicial review, or the board, resulting from adjudicative proceedings, deems proper.

UCA 40–10–22(3)(e) is similar to section 525(e) of SMCRA, except Utah is proposing to change the term ''administrative proceedings'' to ''adjudicative proceedings.'' This

change is consistent with the addition of a definition for the term ''adjudicative proceeding'' proposed by Utah in this amendment at UCA 40–10–3(1). As discussed in finding No. 3, the definition of ''adjudicative proceeding'' as proposed by Utah at UCA 40–10–3(1) does not encompass judicial review.

Use of the term ''adjudicative proceeding'' in UCA 40–10–22(3)(e) allows Utah to limit the reimbursement of costs and expenses incurred through participation in the proceedings to only proceedings which are adjudicatory in nature. Section 525(e) of SMCRA provides for the award of costs and expenses incurred in connection with ''any administrative proceeding.'' Prior to Utah's adoption of the amendment under consideration in this rulemaking, UCA 40–10–22(3)(e) contained similar language.

Both the Interior Board of Land Appeals (IBLA) and the U.S. District Court for the Utah District declined to delineate the full reach of the phrase ''any administrative proceeding'' in section 525(e) of SMCRA when presented with an opportunity to do so. *Natural Resources Defense Council, Inc. (NRDC), et al.* v. *Office of Surface Mining Reclamation and Enforcement (OSM) et al.*, 107 IBLA 339, 365 n. 12 (1989); *Utah International, Inc.* v. *Department of the Interior*, 643 F. Supp. 819, 825 n. 25 (D. Utah 1986). However, in deciding these cases, both IBLA and the U.S. District Court held that this phrase should not be read literally, but rather must be interpreted in the context of the legislative history of SMCRA and case law concerning attorney fee and expense awards under other statutes. Both opinions contain extensive dicta suggesting that the phrase could or should be read to include only administrative proceedings of an adjudicatory nature, not proceedings that are part of the fact-finding process culminating in an initial agency decision, e.g., informal conferences on permit applications. *NRDC, supra*, at 354–360; *Utah International, supra*, at 820–825.

Furthermore, the Federal regulations at 43 CFR 4.1290 and 4.1291, which implement this section of SMCRA in part, provide for an award of costs and expenses only in connection with administrative proceedings resulting in the issuance of a final order by an administrative law judge or IBLA. The preamble to these regulations notes that the Secretary rejected comments requesting the scope of the rules be expanded to allow the award of costs and expenses in other types of administrative proceedings, such as rulemaking (4 CFR 34385, August 3, 1978).

Therefore, the Director finds the Utah statutory provision at UCA 40–10–22(3)(e) that allows for award of costs and expenses in connection with an adjudicatory proceeding is not inconsistent with section 525(e) of SMCRA and its implementing regulations, as interpreted by case law. The Director approves the proposed revisions to this sttatute.

The Director's approval is based upon OSM's interpretation that the term ''adjudicatory proceedings,'' as used at UCA 40–10–22(3)(e) includes all classes of actions in which participants would be eligible for an award of costs and expenses under 43 CFR 4.1290 through 4.1295. The Director notes that, as more case law develops, it may be necessary in the future to further expand the provisions at UCA 40–10–22(3)(e) to include other types of administrative proceedings. In that event, OSM would notify Utah in accordance with 30 CFR Part 732.

16. UCA 40–10–28 (1)(a)(ii) and (2)(a), Recovery of Reclamation Costs and Liens Against Reclaimed Lands

In response to the Director's previous finding that UCA 40–10–28(1)(a)(ii) and 40–10–28(2)(a) were not consistent with sections 407(e) and 408(a) of SMCRA and the Director's deferred decision on these statutory provisions (September 27, 1994; 59 FR 49185, 49187–88; finding Nos. 7 and 9), Utah proposed to add new language to its provisions at UCA 40–10–28(1)(a)(ii) and UCA 40–10–28(2)(a).

Utah proposed at UCA 40–10–28(1)(a)(ii) to require that the sale price of land that is sold to the State or local government for public purposes may not be less than the actual ''cost of the purchase of the property by the State plus the'' costs of reclaiming the land. This requirement is analogous to and no less stringent than the counterpart Federal provision at section 407(e) of SMCRA, which provides that the sale price of land sold to the State or local government for public purposes may in no case be less than the cost of purchase and reclamation of such land.

Utah also proposed the addition of a new provision at UCA 40–10–28(2)(a) to provide, in addition to other criteria, that a lien will be placed against reclaimed land except where the surface owner ''owned the land prior to May 2, 1977.'' This specific requirement is analogous to and no less stringent than the requirement of section 408(a) of SMCRA, which provides, in part, that no lien shall be filed against the property of any person who owned the land prior to May 2, 1977.

As discussed above, the revisions proposed by Utah in this amendment at UCA 40–10–28(1)(a)(ii) and 40–10–28(2)(a) are consistent with sections 407(e) and 408(a) of SMCRA. Therefore, the Director approves the proposed revisions to these statutes.

17. UCA 40–10–30, Judicial Review of Orders or Rules

Utah proposed new provisions at UCA 40–10–30 to provide, in part:

(1) [j]udicial review of adjudicative proceedings under this chapter is governed by Title 63, Chapter 46b, Administrative Procedures Act, and provisions of this chapter consistent with the Administrative Procedures Act.

(2) [j]udicial review of the board's rulemaking procedures and rules adopted under this chapter is governed by Title 63, Chapter 46a, Utah Administrative Rulemaking Act.

(3) [a]n appeal from *an* order of the board shall be *directly to the Utah Supreme Court* and is not a trial de novo. * * *

(4) [a]n action or appeal involving *an* order *of the board* shall be determined as expeditiously as feasible *and in accordance with Subsection 78–2–2(3)(e)(iv). The Utah Supreme Court* shall determine the issues on both questions of law and fact and shall affirm or set aside the rule or order, enjoin or stay the effective date of agency action, or remand the cause to the board for further proceedings. * * *

(5) [i]f the board fails to perform any act or duty under this chapter which is not discretionary, the aggrieved person may bring an action in the district court of the county in which the operation or proposed operation is located.

(Italics indicate new language proposed to be added to this statute.) Utah also proposed to delete the requirement at existing UCA 40–10–30(3) that ''[r]eview of the adjudication of the district court is by the Supreme Court.''

The proposed revisions at UCA 40–10–30 are consistent with the requirements of the counterpart Federal provisions of section 526 of SMCRA. Therefore, the Director finds that the proposed revisions at UCA 40–10–30 are no less stringent than section 526 of SMCRA and approves them.

IV. Summary and Disposition of Comments

Following are summaries of all substantive oral and written comments on the proposed amendment that were received by OSM, and OSM's response to them.

1. Public Comments

OSM invited public comments on the proposed amendment, but none were received.

2. Federal Agency Comments

Pursuant to 732.17(h)(11)(i), OSM solicited comments on the proposed amendment from various Federal agencies with an actual or potential interest in the Utah program and Utah AMLR plan.

In a telephone conversation on May 11, 1994, the Bureau of Mines stated that it had no comments on the proposed amendment (administrative record No. UT–922).

The U.S. Army Corps of Engineers responded in a letter dated May 23, 1994, that it found the proposed changes to be satisfactory (administrative record No. UT–930).

In a letter dated May 18, 1995, the Mine Safety and Health Administration stated that its personnel had reviewed the proposed amendment for possible conflicts with MSHA regulations and that no conflicts between the two were found (administrative record No. UT–1056).

3. Environmental Protection Agency (EPA) Concurrence and Comments

Pursuant to 30 CFR 732.17(h)(11)(ii), OSM is required to solicit the written concurrence of EPA with respect to those provisions of the proposed program amendment that relate to air or water quality standards promulgated under the authority of the Clean Water Act (33 U.S.C. 1251 *et seq.*) or the Clean Air Act (42 U.S.C. 7401 *et seq.*). None of the revisions that Utah proposed to make in its amendment pertain to air or water quality standards. Therefore, OSM did not request EPA's concurrence.

Pursuant to 732.17(h)(11)(i), OSM solicited comments on the proposed amendment from EPA (administrative record No. UT–919). It responded on May 9, 1994, that it believed that the proposed amendment would have no impact on water quality standards promulgated under the authority of the Clean Water Act, as amended (33 U.S.C. 1251 *et seq.*).

4. State Historic Preservation Officer (SHPO)

Pursuant to 30 CFR 732.17(h)(4), OSM solicited comments on the proposed amendment from the SHPO (administrative record Nos. UT–919). The SHPO did not respond to OSM's request.

V. Director's Decision

Based on the above findings, the Director approves, with additional requirements, Utah's proposed amendment as submitted on April 14, 1994, and as revised and supplemented with additional explanatory information on December 7, 1994.

The Director approves the following sections of the proposed amendment, as discussed in: finding No. 1, UCA 40–10–2 (1) through (6), concerning purpose; UCA 40–10–3 (2) through (7), (9) through (20), and (22) [recodification], concerning the definitions of certain terms; UCA 40–10–6.5 (2) and (3) [recodification], concerning rulemaking procedures; UCA 40–10–7(1), concerning prohibited financial interest in mining operations; UCA 40–10–8 (1) and (3), concerning exploration rules issued by the Division and penalties for violations; UCA 40–10–10(2), concerning submission of the application and reclamation plan; UCA 40–10–11 (1), (2)(a) through (d), (e)(ii), (f) (i) and (iii), and (4) (a) and (b), concerning Division action on the permit application, requirements for approval, and restoration of prime farmland; UCA 40–10–12(3), concerning revision or modification of permit provisions; UCA 40–10–14 (2) and (3), concerning notice to the applicant of approval or disapproval of the application and hearings; UCA 40–10–15(1), concerning performance bonds; UCA 40–10–16 (1), (3), and (6)(a), concerning release of the performance bond, surety, or deposit, action on the application for relief of bond, and formal hearings or informal conferences; UCA 40–10–17 (2)(g), (2)(j) (i)(B) and (ii) (A) and (B), (2)(m), (2) (o) and (o)(i), (iv), and (v), (2)(p)(i)(F), (ii), and (iii), (2)(t)(i), (2)(v)(viii), (3)(b) and (b)(ii), (3)(c), (4) (a) and (d), and (5), concerning performance standards for all coal mining and reclamation operations, additional standards for steep-slope surface coal mining, and variances; UCA 40–10–18 (1), (2)(i)(i)(B), (2)(j), and (5), concerning underground coal mining, rules regarding surface effects, operator requirements for underground coal mining, and applicability of other chapter provisions; UCA 40–10–19 (1) and (2)(a), concerning information provided by the permittee to the Division and inspections by the Division; UCA 40–10–21(1)(a) (i) and (ii), and (2)(a)(ii), and (5), concerning civil action to compel compliance with chapter, jurisdiction, and other rights not affected; UCA 40–10–22 (1)(c) and (2)(a)(i), concerning violation of chapter or permit conditions and inspections; UCA 40–10–24(1)(c)(i) (A), (B), (C), and (D), and (ii), (e) (i), (ii), and (iii), and (2) (a) and (b), concerning determination of unsuitability of lands for surface coal mining, petitions, and public hearings; UCA 40–10–25(2) (d) and (e) [recodification] and (3) and (3)(a), concerning abandoned mine reclamation program, expenditure priorities, and eligible lands and water; and UCA 40–10–27(5)(a) and (12)(b), concerning entry upon land adversely affected by past coal mining practices and State acquisition of lands; finding No. 2, UCA 40–10–3 (8) and (21), concerning definitions for the terms ''lands eligible for remining'' and ''unanticipated event or condition;'' UCA 40–10–11(5) (b), and (c), concerning Division action on permit application and requirements for approval; UCA 40–10–17(2)(t)(ii), concerning performance standards for lands eligible for remining; UCA 40–10–22 (1)(d) and (3) (a), (b), (d) and (f), concerning violations of chapter or permit conditions, cessation orders, abatement notices, or show cause orders, suspension or revocation of permits, and reviews,; and UCA 40–10–25(2)(d) [deletion], 3(b), (4), (5), and (6), concerning abandoned mine reclamation program, eligible lands and water; finding No. 4, UCA 40–10–4, concerning repeal of the applicability of provisions of UCA 40–8; finding No. 5, UCA 40–10–6.5 (1) and (3), concerning rulemaking authority and deletion of administrative procedures; finding No. 6, UCA UCA 40–10–6.7 and Utah Admin. R. 641–100–100, concerning administrative procedures; finding No. 10, UCA 40–10–14(6), concerning appeal to district court and further review; finding No. 11, UCA 40–10–16(6) (b) through (d), concerning informal conferences or formal hearings pertaining to performance bond release decisions; finding No. 12, UCA 40–10–18(4), concerning damage resulting from underground coal mining subsidence; finding No. 15, UCA 40–10–22(2)(b), concerning cessation orders, abatement notices, and show cause orders; finding No. 15, UCA 40–10–22(3)(e), concerning costs assessed against either party adversely affected by the Board's notice or order; finding No. 16, UCA 40–10–28(1)(a)(ii) and (2)(a), concerning recovery of reclamation costs and liens against reclaimed lands; and finding No. 17, UCA 40–10–30, concerning judicial review of rules or orders.

With the requirement that Utah further revise its statutes, the Director approves, as discussed in: finding No. 3, UCA 40–10–3(1), concerning the definition of ''adjudicative proceeding;'' finding No. 7, UCA 40–10–11(3), concerning the schedule of an applicant's mining law violations and pattern of violations determination; finding No. 8, UCA 40–10–11(5)(a), concerning remining operation violations resulting from unanticipated events or conditions; finding No. 9, UCA 40–10–13(2)(b), concerning the

location of informal conferences; and finding No. 13, UCA 40–10–20(2)(e)(ii), concerning contest of the violation or the amount of the civil penalty.

The Director approves the statutes and rule as proposed by Utah with the provision that they be fully promulgated in identical form to the statutes and rule submitted to and reviewed by OSM and the public.

The Federal regulations at 30 CFR Part 944, codifying decisions concerning the Utah program and Utah plan, are being amended to implement this decision. This final rule is being made effective immediately to expedite the State program and plan amendment process and to encourage States to bring their programs into conformity with the Federal standards without undue delay. Consistency of State and Federal standards is required by SMCRA.

VI. Procedural Determinations

1. Executive Order 12866

This rule is exempted from review by the Office of Management and Budget (OMB) under Executive Order 12866 (Regulatory Planning and Review).

2. Executive Order 12778

The Department of the Interior has conducted the reviews required by section 2 of Executive Order 12778 (Civil Justice Reform) and has determined that this rule meets the applicable standards of subsections (a) and (b) of that section. However, these standards are not applicable to the actual language of State regulatory programs and program amendments or AMLR plans and revisions thereof since each such program or plan is drafted and promulgated by a specific State, not by OSM. Under sections 503 and 505 of SMCRA (30 U.S.C. 1253 and 1255) and the Federal regulations at 30 CFR 730.11, 732.15, and 732.17(h)(10), decisions on proposed State regulatory programs and program amendments submitted by the States must be based solely on a determination of whether the submittal is consistent with SMCRA and its implementing Federal regulations and whether the other requirements of 30 CFR Parts 730, 731, and 732 have been met. Decisions on proposed State AMLR plans and revisions thereof submitted by a State are based on a determination of whether the submittal meets the requirements of Title IV of SMCRA (30 U.S.C. 1231–1243) and the applicable Federal regulations at 30 CFR Parts 884 and 888.

3. National Environmental Policy Act

No environmental impact statement is required for this rule since section 702(d) of SMCRA (30 U.S.C. 1292(d)) provides that agency decisions on proposed State regulatory program provisions do not constitute major Federal actions within the meaning of section 102(2)(C) of the National Environmental Policy Act of 1969 (42 U.S.C. 4332(2)(C)).

No environmental impact statement is required for this rule since agency decisions on proposed State AMLR plans and revisions thereof are categorically excluded from compliance with the National Environmental Policy Act (42 U.S.C. 4332) by the Manual of the Department of the Interior (516 DM 6, appendix 8, paragraph 8.4B(29)).

4. Paperwork Reduction Act

This rule does not contain information collection requirements that require approval by OMB under the Paperwork Reduction Act (44 U.S.C. 3507 *et seq.*).

5. Regulatory Flexibility Act

The Department of the Interior has determined that this rule will not have a significant economic impact on a substantial number of small entities under the Regulatory Flexibility Act (5 U.S.C. 601 *et seq.*). The State submittal that is the subject of this rule is based upon counterpart Federal regulations for which an economic analysis was prepared and certification made that such regulations would not have a significant economic effect upon a substantial number of small entities. Accordingly, this rule will ensure that existing requirements established by SMCRA or previously promulgated by OSM will be implemented by the State. In making the determination as to whether this rule would have a significant economic impact, the Department relied upon the data and assumptions for the counterpart Federal regulations.

List of Subjects in 30 CFR Part 944

Intergovernmental relations, Surface mining, Underground mining.

Dated: July 13, 1995.

Richard J. Seibel,

Regional Director, Western Regional Coordinating Center.

For the reasons set out in the preamble, Title 30, Chapter VII, Subchapter T of the Code of Federal Regulations is amended as set forth below:

PART 944—UTAH

1. The authority citation for Part 944 continues to read as follows:

Authority: 30 U.S.C. 1201 *et seq.*

2. Section 944.15 is amended by adding paragraph (ff) to read as follows;

§ 944.15 Approval of amendments to State regulatory program.

* * * * *

(ff) The revisions to or additions of the following sections of the Utah Code Annotated 1953 (UCA), Title 40, and the Utah Administrative Rules (Utah Admin. R.) for Coal Mining, as submitted to OSM on April 14, 1994, and as revised and supplemented with explanatory information on December 7, 1994, are approved effective July 19, 1995.

UCA 40–10–2 (1) through (6)	Purpose.
40–10–3(1)	Definition of ''Adjudicative Proceeding.''
40–10–3 (2) through (7), (9) through (20), and (22)	Recodification of Definitions.
40–10–3 (8) and (21)	Definitions of ''Lands Eligible for Remining'' and ''Unanticipated Event or Condition.''
40–10–4	Repeal of the Applicability Provisions of 40–8.
40–10–6.5(1)	Rulemaking Authority.
40–10–6.5 (2) and (3)	Recodification of Rulemaking Procedures.
40–10–6.5(3)	Deletion of Administrative Procedures.
40–10–6.7	Administrative Procedures.
40–10–7(1)	Prohibited Financial Interests in Mining Operations.
40–10–8 (1) and (3)	Exploration Rules Issued by Division and Penalty for Violations.
40–10–10(2)	Submission of Applications and Reclamation Plans.
40–10–11 (1), (2)(a) through (d), (e)(ii), (f) (i) and (iii), and (4) (a) and (b).	Division of Oil, Gas and Mining (Division) Action on Permit Applications, Requirements for Approval, and Restoration of Prime Farmland.
40–10–11(3)	Schedule of Applicant's Mining Law Violations and Pattern of Violations Determination.

40–10–11(5)(a)	Remining Operation Violations Resulting From Unanticipated Events or Conditions.
40–10–(5) (b) and (c)	Division Action on Permit Applications and Requirements for Approval.
40–10–12(3)	Revisions or Modifications of Permit Provisions.
40–10–13(2)(b)	Location of Informal Conferences.
40–10–14 (2) and (3)	Notice to Applicant of Approval or Disapproval of Application and Hearings.
40–10–14(6)	Appeals to District Court and Further Review.
40–10–15(1)	Performance Bonds.
40–10–16 (1), (3), and (6)(a)	Release of the Performance Bond, Surety, or Deposit, Action on Application for Relief of Bond, and Formal Hearings or Informal Conferences.
40–10–16(6) (b) through (d)	Information Conferences or Formal Hearings Pertaining to Performance Bond Release Decisions.
40–10–17(2) (g), (2)(j)(i) (B) and (ii)(A) and (B), (2)(m), (2) (o), and (o)(i), (iv), and (v), (2)(p) (i)(F), (ii), and (iii), (2)(t)(i), (2) (v)(viii), (3) (b) and (b)(ii), (3)(c), (4) (a) and (d), and (5).	Performance Standards for All Coal Mining and Reclamation Operations, Additional Standards for Steep-Slope Surface Coal Mining, and Variances.
40–10–17(2)(t)(ii)	Performance Standards for All Coal Mining and Reclamation Operations.
40–10–18 (1), (2)(i)(i)(B), (2)(j), and (5)	Underground Coal Mining, Rules Regarding Surface Effects, Operator Requirements for Underground Coal Mining, and Applicability of Other Chapter Provisions.
40–10–18(4) (a) through (c)	Damage Resulting From Underground Coal Mining Subsidence.
40–10–19 (1) and (2)(a)	Information Provided by Permittee to Division and Inspections by Division.
40–10–20(2)(e)(ii)	Contest of the Violation or the Amount of the Civil Penalty.
40–10–21 (1)(a) (i) and (ii), (2)(a)(ii), and (5)	Civil Action to Compel Compliance with Chapter, Jurisdiction, and Other Rights Not Affected.
40–10–22 (1)(c) and (2)(a)(i)	Violations of Chapter or Permit Conditions and Inspections.
40–10–22 (1)(d) and (3) (a), (b), (d), and (f)	Violations of Chapter or Permit Conditions, Cessation Orders, Abatement Notices, or Show Cause Orders, and Suspensions or Revocations of Permit.
40–10–22(2)(b)	Cessation Orders, Abatement Notices, and Show Cause Orders.
40–10–22(3)(e)	Costs Assessed Against Either Party.
40–10–24(1)(c)(i) (A), (B), (C), and (D), and (ii), (e) (i), (ii), and (iii), and (2) (a) and (b).	Determination of Unsuitability of Lands for Surface Coal Mining, Petitions, and Public Hearings.
40–10–30	Judicial Review of Rules or Orders.
Utah Admin. R. 641–100–100	Administrative Procedures.

3. Section 944.16 is amended by removing and reserving paragraph (b) and adding paragraphs (e) through (i) to read as follows:

§ 944.16 Required program amendments.

* * * * *

(e) By March 1, 1996, Utah shall revise its definition of ''adjudicative proceeding'' at UCA 40–10–3(1) to include judicial review of agency actions.

(f) By March 1, 1996, Utah shall revise UCA 40–10–11(3) to require that (1) the schedule of the applicant's mining law violations required in connection with a permit application includes violations of SMCRA and the implementing Federal regulations and (2) the pattern of violations determination discussed therein includes violations of SMCRA, the implementing Federal regulations, any State or Federal programs enacted under SMCRA, and other provisions of the approved Utah program.

(g) By March 1, 1996, Utah shall revise UCA 40–10–11(5)(a) to reflect an effective date of ''after October 24, 1992.''

(h) By March 1, 1996, Utah shall revise UCA 40–10–13(2)(b) to change the word ''may'' to ''shall'' in the sentence that begins ''[t]he conference may be held in the locality of the coal mining and reclamation operation * * *.''

(i) By March 1, 1996, Utah shall revise UCA 40–10–20(2)(e)(ii) to provide for a waiver of the operator's right to contest the amount of the civil penalty when the operator fails to forward the amount of the penalty to the regulatory authority within 30 days of receipt of the results of the informal conference.

4. Section 944.25 is amended by adding paragraph (c) to read as follows:

§ 944.25 Approval of amendments to State abandoned mine plan.

* * * * *

(c) The following sections of the Utah Code Annotated 1953 (UCA), Title 40, pertaining to the Utah abandoned mine plan, as submitted to OSM on April 14, 1994, and revised on December 7, 1994, are approved effective July 19, 1995.

40–10–25(2)(d), Deletion of Research and Demonstration Projects.

40–10–25(2) (d) and (e), Recodification of Expenditure Priorities.

40–10–25 (3), (3)(a), (3)(b), (4), (5), and (6), Eligible Lands and Water.

40–10–27 (5)(a) and (12)(b), Entry Upon Land Adversely Affected by Past Coal Mining Practices and State Acquisition of Lands.

40–10–28 (1)(a)(ii) and (2)(a), Recovery of Reclamation Costs and Liens Against Reclaimed Lands.

[FR Doc. 95–17716 Filed 7–18–95; 8:45 am]

BILLING CODE 4310–05–M

DEPARTMENT OF VETERANS AFFAIRS

38 CFR Part 4

RIN 2900–AG86

Chronic Fatigue Syndrome

AGENCY: Department of Veterans Affairs.

ACTION: Final rule.

SUMMARY: This document adopts as a final rule without change an interim rule adding a diagnostic code and evaluation criteria for chronic fatigue syndrome to the VA Schedule for Rating Disabilities. The intended effect of this rule is to insure that veterans diagnosed with this condition meet uniform criteria and receive consistent evaluations.

EFFECTIVE DATE: This final rule is effective July 19, 1995. The interim rule was effective November 29, 1994.

FOR FURTHER INFORMATION CONTACT: Caroll McBrine, M.D., Consultant, Regulations Staff, Compensation and Pension Service, Veterans Benefits Administration, Department of Veterans Affairs, 810 Vermont Avenue NW., Washington DC 20420, (202) 273–7210.

SUPPLEMENTARY INFORMATION: On November 29, 1994, VA published in the **Federal Register** an interim rule with request for comments (59 FR 60901). The rule added a diagnostic code (DC 6354) and evaluation criteria for chronic fatigue syndrome to the section of the VA Schedule for Rating Disabilities (38 CFR Part 4) on systemic diseases (38 CFR 4.88b). A 60-day comment period ended January 30, 1995, and no comments were received.

Based on the rationale set forth in the interim rule document, we are adopting the provisions of the interim rule as a final rule without change. This final rule also affirms the information in the interim rule document concerning Regulatory Flexibility Act.

The Catalog of Federal Domestic Assistance program numbers are 64.104 and 64.109.

List of Subjects in 38 CFR Part 4

Individuals with disability, Pensions, Veterans.

Approved: July 10, 1995.

Jesse Brown,

Secretary of Veterans Affairs.

[FR Doc. 95–17659 Filed 7–18–95; 8:45 am]

BILLING CODE 8320–01–P

ENVIRONMENTAL PROTECTION AGENCY

40 CFR Part 52

[MI42–02–7122; FRL–5259–7]

Determination of Attainment of Ozone Standard by Grand Rapids and Muskegon, Michigan; Determination Regarding Applicability of Certain Reasonable Further Progress and Attainment Demonstration Requirements: Withdrawal

AGENCY: Environmental Protection Agency (EPA).

ACTION: Final rule.

SUMMARY: On June 2, 1995, the EPA published a proposed rule (60 FR 28773) and a direct final rule (60 FR 28729) determining that the Grand Rapids (Kent and Ottawa Counties) and Muskegon (Muskegon County), Michigan ozone nonattainment areas have attained the National Ambient Air Quality Standard (NAAQS) for ozone. Based on that determination, the EPA also determined that requirements of section 182(b)(1) of the Clean Air Act (Act) concerning the submission of the 15 percent plan and ozone attainment demonstration and the requirements of section 172(c)(9) of the Act concerning contingency measures are not applicable to the areas so long as the areas do not violate the ozone standard. The EPA is removing the final rule due to adverse comments and will summarize and address all public comments received in a subsequent final rule (based upon the proposed rule cited above).

EFFECTIVE DATE: This withdrawal of the direct final action will be effective July 19, 1995.

ADDRESSES: Copies of the documents relevant to this action are available for public inspection during normal business hours at the following location: U.S. Environmental Protection Agency, Region 5, 77 West Jackson Boulevard, Chicago, Illinois 60604.

FOR FURTHER INFORMATION CONTACT: Madelin Rucker, Regulation Development Section, Air Toxics and Radiation Branch (AT–18J), U.S. Environmental Protection Agency, Region 5, 77 West Jackson Boulevard, Chicago, Illinois, 60604. Telephone: (312) 886–0661.

List of Subjects in 40 CFR Part 52

Environmental protection, Air pollution control, Hydrocarbons, Intergovernmental relations, Oxides of nitrogen, Ozone, Reporting and recordkeeping requirements, Volatile organic compounds.

Dated: July 11, 1995.

Valdas V. Adamkus,

Regional Administrator.

Part 52, chapter I, title 40 of the Code of Federal Regulations is amended as follows:

PART 52—[AMENDED]

1. The authority citation for part 52 continues to read as follows:

Authority: 42 U.S.C. 7401–7671q.

Subpart X—Michigan

2. Section 52.1174(k) is removed.

[FR Doc. 95–17672 Filed 7–18–95; 8:45 am]

BILLING CODE 6560–50–P

40 CFR Part 52

[OR45–1–6762a; FRL–5251–4]

Approval and Promulgation of Implementation Plans: Oregon

AGENCY: Environmental Protection Agency.

ACTION: Direct final rule.

SUMMARY: The Environmental Protection Agency (EPA) approves a revision to the State of Oregon's Air Quality Control Plan Volume 2 (The Federal Clean Air Act State Implementation Plan and other State Regulations). Specifically EPA approves a revision to Section 2.2—Legal Authority, of the State's Implementation Plan (SIP) and a revision to Chapters 468 and 468A of the Oregon Revised Statutes (ORS). The SIP revision was submitted to address section 110(a)(2)(E) of the Clean Air Act, as amended (CAA).

DATES: This action will be effective on September 18, 1995 unless adverse or critical comments are received by August 18, 1995.

If the effective date is delayed, timely notice will be published in the **Federal Register**.

ADDRESSES: Written comments should be addressed to: Montel Livingston, SIP Manager, Air & Radiation Branch (AT–082), EPA, 1200 Sixth Avenue, Seattle, Washington 98101.

Documents which are incorporated by reference are available for public inspection at the Air and Radiation Docket and Information Center, EPA, 401 M Street, SW., Washington, DC 20460. Copies of material submitted to EPA may be examined during normal business hours at the following locations: EPA, Region 10, Air & Radiation Branch, 1200 Sixth Avenue (AT–082), Seattle, Washington 98101, and the ODEQ, 811 SW., Sixth Avenue, Portland, Oregon 97204–1390.

FOR FURTHER INFORMATION CONTACT: Rindy Ramos, Air & Radiation Branch (AT–082), EPA, Seattle, Washington 98101, (206) 553–6510.

SUPPLEMENTARY INFORMATION.

I. Background

On July 29, 1992, the Oregon Department of Environmental Quality (ODEQ) submitted to EPA a revision to Chapter 468 of the Oregon Revised Statutes (ORS), a new ORS Chapter 468A, and a revised Section 2.2—Legal Authority, to the federally approved SIP. This submittal contained statutes amended or adopted through July, 1991. In addition, some of the statutes previously contained in Chapter 468 were renumbered and moved into the

newly created Chapter 468A entitled ''Air Quality''. Chapter 468A was created for those statutes specific to air quality. Also, the title for Chapter 468 was changed from ''Pollution Control'' to ''Environmental Quality Generally''.

Section 2.2—Legal Authority. This section of the SIP discusses the legal basis upon which Oregon's Environmental Quality Commission establishes policy for the operation of ODEQ and upon which ODEQ functions to control, prevent and abate air pollution in Oregon. This section also contains the statutes upon which Oregon's legal authority to regulate air pollutants is based.

On August 30, 1994, the State of Oregon submitted to EPA another revision to Chapters 468 and 468A of the ORS. These revised chapters include statutes amended or adopted by the Oregon Legislature through August, 1993, and became state effective on November 4, 1993.

Because the August 30, 1994, submittal supersedes the 1992 submittal of Chapters 468 and 468A, EPA is taking action on the 1994 submittal of the chapters and the 1992 submittal of Section 2.2—Legal Authority in this document.

The August 30, 1994, submittal includes the following provisions in ORS Chapter 468: General Administration—sections 468.005 through 468.075, Enforcement—sections 468.090 to 468.140, and Pollution Control Facilities Tax Credit—sections 468.150 to 468.190. ORS Chapter 468A contains the following provisions: Air Pollution Control—sections 468A.005 to 468A.085, Regional Air Quality Control Authorities—sections 468A.100 to 468A.180, Small Business Stationary Source Technical and Environmental Compliance Assistance Program—section 468A.330, Motor Vehicle Pollution Control—sections 468A.350 to 468A.455, Woodstove Emissions Control—sections 468A.460 to 468A.520, and Field Burning and Propane Flaming—sections 468A.550 to 468A.620.

In this document, EPA approves the above statutes, except for ORS 468A.075 and ORS 468A.330, as meeting the requirements of section 110(a)(2)(E) of the CAA and 40 CFR part 51, subpart L—Legal Authority. EPA is not acting on ORS 468A.075 and ORS 468A.330 in this **Federal Register** document. Section 110(a)(2)(E) requires, among other things, that a SIP provides assurance that a state has adequate authority under state law to carry out SIP requirements (and is not prohibited by any provision of Federal or State law from carrying out such implementation plan or portion thereof).

As discussed in Section 2.2 of the SIP, ODEQ recognizes that EPA has not previously approved, nor will EPA now approve, statutes or regulations for variances as revisions to the SIP. ORS 468A.075 provides the authority for the state to grant variances from air contamination rules and standards. However, since SIP rules and standards are relied upon to attain and maintain the National Ambient Air Quality Standards (NAAQS), and because any relaxation of a SIP requirement would require a SIP revision, and only EPA can approve a revision, it is not appropriate for EPA to approve the state's authority to grant variances into the SIP.

It should be noted that even if the state grants a source specific variance to a SIP limit, EPA is not precluded from enforcing the federally approved SIP limit. Thus, granting of a variance by the state does not change the federally enforceable and approved SIP limit.

EPA is also not acting on ORS 468A.330. This section authorizes the state to establish a Small Business Stationary Source Technical and Environmental Compliance Assistance Program (SBAP) in accordance with section 507 of the CAA. The statute, in conjunction with the SBAP, will be reviewed and acted on at a later date.

All measures and other elements in a SIP must be enforceable by ODEQ and EPA (See sections 172(c)(6), 110(a)(2)(A) and 57 FR 13556). EPA criteria addressing the enforceability of SIPs and SIP revisions were stated in a September 23, 1987, memorandum (with attachments) from J. Craig Potter, Assistant Administrator for Air and Radiation, et al. (see 57 FR 13541).

During review of the 1992 submittal, EPA determined that the Oregon Revised Statute Chapter 468, as amended in 1991, bars civil penalties from being imposed for certain stationary source permit violations. Specifically, ORS 468.126(1) provided that penalties could not be assessed against a source for permit violations unless the state first provided notice of the violation to the source, and further, if within five days, the source came into compliance or provided an adequate schedule to come into compliance in the future, no penalties could be assessed. EPA informed the Oregon Department of Environmental Quality that this provision was unacceptable to the extent it applied to permit limits which were specified in the SIP and were relied on to attain, maintain or demonstrate attainment with a NAAQS.

On September 3, 1993, the Governor of Oregon signed into law new legislation correcting this deficiency. The new law provides that the five-day advance notice provision required by ORS 468.126(1) does not apply if the notice requirement would disqualify a state program from federal approval or delegation (see ORS 468.126(2)(e)).

The state has acknowledged, by a letter dated November 5, 1993, that, pursuant to ORS 468.126(2)(e), the notice provision in ORS 468.126(1) will not apply to violations of SIP requirements contained in permits, including permits containing industrial source control requirements, relied upon to attain, maintain, or demonstrate attainment with a NAAQS. Therefore, EPA is approving this provision into the SIP. It's application to non-SIP items that are specified in a permit will be separately reviewed in conjunction with any submitted permit program.

II. This Action

EPA approves the July 29, 1992, submittal revising Section 2.2—Legal Authority of the Oregon SIP. EPA also approves the August 30, 1994, submittal revising ORS Chapters 468 and 468A, except for ORS 468A.075 and ORS 468A.330. This revision of the ORS became state effective November 4, 1993.

III. Administrative Review

Under the Regulatory Flexibility Act, 5 U.S.C. 600 et seq., EPA must prepare a regulatory flexibility analysis assessing the impact of any proposed or final rule on small entities. 5 U.S.C. 603 and 604. Alternatively, EPA may certify that the rule will not have a significant impact on a substantial number of small entities. Small entities include small businesses, small not-for-profit enterprises, and government entities with jurisdiction over populations of less than 50,000.

SIP approvals under section 110 and subchapter I, part D of the CAA do not create any new requirements, but simply approve requirements that the state is already imposing. Therefore, because the federal SIP-approval does not impose any new requirements, I certify that it does not have a significant impact on any small entities affected. Moreover, due to the nature of the federal-state relationship under the CAA, preparation of a regulatory flexibility analysis would constitute federal inquiry into the economic reasonableness of state action. The CAA forbids EPA to base its actions concerning SIPs on such grounds. *Union Electric Co.* v. *U.S.E.P.A.*, 427 U.S. 246, 256–66 (S.Ct. 1976); 42 U.S.C. 7410(a)(2).

The EPA is publishing this action without prior proposal because the Agency views this as a noncontroversial amendment and anticipates no adverse comments. However, in a separate document in this **Federal Register** publication, the EPA is proposing to approve the SIP revision should adverse or critical comments be filed. This action will be effective September 18, 1995 unless, by August 18, 1995 adverse or critical comments are received.

If the EPA receives such comments, this action will be timely withdrawn by publishing a subsequent document that will withdraw the final action. All public comments received will be addressed in a subsequent final rule based on this action serving as a proposed rule. The EPA will not institute a second comment period on this action. Any parties interested in commenting on this action should do so at this time. If no such comments are received, the public is advised that this action will be effective September 18, 1995.

The EPA has reviewed this request for revision of the federally-approved SIP for conformance with the provisions of the 1990 Clean Air Act Amendments enacted on November 15, 1990. The EPA has determined that this action conforms with those requirements.

Nothing in this action should be construed as permitting or allowing or establishing a precedent for any future request for revision to any SIP. Each request for revision to the SIP shall be considered separately in light of specific technical, economic and environmental factors and in relation to relevant statutory and regulatory requirements.

Under Section 202 of the Unfunded Mandates Reform Act of 1995 (''Unfunded Mandates Act''), signed into law on March 22, 1995, EPA must prepare a budgetary impact statement to accompany any proposed or final rule that includes a Federal mandate that may result in estimated costs to State, local, or tribal governments in the aggregate; or to the private sector, of $100 million or more. Under Section 205, EPA must select the most cost-effective and least burdensome alternative that achieves the objectives of the rule and is consistent with statutory requirements. Section 203 requires EPA to establish a plan for informing and advising any small governments that may be significantly or uniquely impacted by the rule.

EPA has determined that the approval action promulgated does not include a Federal mandate that may result in estimated costs of $100 million or more to either State, local, or tribal governments in the aggregate, or to the private sector. This Federal action approves pre-existing requirements under State or local law, and imposes no new Federal requirements. Accordingly, no additional costs to State, local, or tribal governments, or to the private sector, result from this action.

This action has been classified as a Table 2 action by the Regional Administrator under the procedures published in the **Federal Register** on January 19, 1989 (54 FR 2214–2225), as revised by an October 4, 1993 memorandum from Michael H. Shapiro, Acting Assistant Administrator for Air and Radiation. The OMB has exempted this regulatory action from E.O. 12866 review.

Under section 307(b)(1) of the Clean Air Act, petitions for judicial review of this action must be filed in the United States Court of Appeals for the appropriate circuit by September 18, 1995. Filing a petition for reconsideration by the Administrator of this final rule does not affect the finality of this rule for the purposes of judicial review nor does it extend the time within which a petition for judicial review may be filed and shall not postpone the effectiveness of such rule or action. This action may not be challenged later in proceedings to enforce its requirements. (See section 307(b)(2), 42 U.S.C. 7607(b)(2).)

List of Subjects in 40 CFR Part 52

Environmental protection, Air pollution control, Carbon monoxide, Hydrocarbons, Incorporation by reference, Intergovernmental relations, Lead, Nitrogen dioxide, Ozone, Particulate matter, Reporting and recordkeeping requirements, Sulfur oxides, Volatile organic compounds.

Note: Incorporation by reference of the Implementation Plan for the State of Oregon was approved by the Director of the Office of the Federal Register on July 1, 1982.

Dated: June 23, 1995.

Chuck Clarke,

Regional Administrator.

Part 52, chapter I, title 40 of the Code of Federal Regulations is amended as follows:

PART 52—[AMENDED]

1. The authority citation for part 52 continues to read as follows:

Authority: 42 U.S.C. 7401–7671q.

Subpart MM—Oregon

2. Section 52.1970 is amended by adding paragraph (c)(111) to read as follows:

§ 52.1970 Identification of plan.

* * * * *

(c) * * *

(111) The EPA approves a revision to the State of Oregon's Air Quality Control Plan Volume 2 (The Federal Clean Air Act State Implementation Plan and other State Regulations), specifically a revision to Section 2.2—Legal Authority and a revision to Chapters 468 and 468A of the Oregon Revised Statutes (ORS).

(i) Incorporation by reference.

(A) On July 29, 1992 and August 30, 1994, ODEQ submitted to EPA a revision to Oregon Revised Statutes (ORS), Chapter 468 (1993 Edition), and Chapter 468A (1993 Edition), both of which were amended and adopted through August 1993 and in effect on November 4, 1993; and a revised Section 2.2—Legal Authority, including subsections 2.2.1 through 2.2.9, dated and revised July 29, 1992, the date of the official attached transmittal letter.

[FR Doc. 95–17670 Filed 7–18–95; 8:45 am]

BILLING CODE 6560–50–P

---

40 CFR Part 52

[PA63–1–7124; FRL–5259–6]

Approval and Promulgation of Air Quality Implementation Plans; Commonwealth of Pennsylvania: Determination of Attainment of Ozone Standard by the Pittsburgh-Beaver Valley and Reading Ozone Nonattainment Areas and Determination Regarding Applicability of Certain Reasonable Further Progress and Attainment Demonstration Requirements

AGENCY: Environmental Protection Agency (EPA).

ACTION: Final rule.

SUMMARY: EPA has determined that the Pittsburgh-Beaver Valley and Reading ozone nonattainment areas have attained the National Ambient Air Quality standard (NAAQS) for ozone. This determination is based upon three years of ambient air monitoring data for the years 1992–94 that demonstrate that the ozone NAAQS has been attained in these areas. On the basis of this determination, EPA is also determining that certain reasonable further progress (RFP) and attainment demonstration requirements, along with certain other related requirements, of Part D of Title I of the Clean Air Act (CAA) are not applicable to these areas as long as these areas continue to attain the ozone NAAQS.

EFFECTIVE DATE: July 19, 1995.

ADDRESSES: Copies of the documents relevant to this action are available for public inspection during normal business hours at the Air, Radiation, and Toxics Division, U.S. Environmental Protection Agency, Region III, 841 Chestnut Building, Philadelphia, Pennsylvania 19107.

FOR FURTHER INFORMATION CONTACT: Kathleen Henry, (215) 597–0545.

SUPPLEMENTARY INFORMATION: EPA published a Notice of Direct Final Rulemaking (DFR) on May 26, 1995 (60 FR 27893). In that rulemaking, EPA determined that the Pittsburgh-Beaver Valley and Reading ozone nonattainment areas have attained the ozone standard and that the requirements of section 182(b)(1) concerning the submission of a 15% RFP plan and ozone attainment demonstration and the requirements of section 172(c)(9) concerning contingency measures are not applicable to these areas so long as the areas do not violate the ozone standard. In addition, EPA determined that the sanctions clocks started on January 18, 1994, for these areas for failure to submit the RFP requirements would be stopped since the deficiency on which they are based no longer exists.

At the same time that EPA published the direct final rule, a separate notice of proposed rulemaking (NPR) was published in the **Federal Register** (60 FR 27945) in the event that adverse or critical comments were filed which would require EPA to withdraw the direct final rule. EPA received adverse comments within 30 days of publication of the proposed rule and withdrew the direct final rule on June 13, 1995 (60 FR 31081).

The specific rationale and air quality analysis EPA used to determine that the Pittsburgh-Beaver Valley and Reading ozone nonattainment areas have attained the NAAQS for ozone and are not required to submit SIP revisions for RFP, attainment demonstration and related requirements are explained in the DFR and will not be restated here.

Response to Public Comment

Two letters were received supporting EPA's proposed action, and one adverse comment letter was received on the DFR. Following are the relevant comments that were submitted followed by EPA's response.

Comment #1 The Clean Air Council (CAC) commented that EPA's action disregards the requirements of section 107(d)(3)(E) of the Clean Air Act (CAA), which govern redesignations to attainment. According to the commenter, the EPA's action indicates that the Agency intends to allow nonattainment areas to be redesignated to attainment, regardless of air quality or legal requirements. The commenter argued that EPA's action essentially eliminates the requirement of section 107(d)(3)(E)(v), which is that, for an area to be redesignated to attainment, the State must have met all requirements applicable to the area under section 110 and part D of Title I of the CAA.

Response #1 The action proposed by EPA and finalized with this notice is not a redesignation and does not eliminate the requirements of section 107(d)(3)(E), which EPA believes must be met in order for areas, including Pittsburgh and Reading, to be redesignated to attainment. In sum, the action being taken with this notice does not relax the requirements applicable to the evaluation of the redesignation requests submitted for Pittsburgh and Reading on November 13, 1993.

The action being taken by EPA is a determination that the relevant areas have attained the ozone NAAQS and, on the basis of that determination, that certain reasonable further progress and attainment demonstration requirements, along with certain other related requirements, of part D of Title I of the CAA do not apply to the areas as long as the areas continue to attain the NAAQS. In order to be redesignated, EPA would need to approve requests for redesignation for these areas, which were submitted on November 13, 1993, by the Commonwealth of Pennsylvania. In order to be approved, a redesignation request must satisfy the criteria of section 107(d)(3)(E), including the requirement of section 107(d)(3)(E)(v) that the State have met all requirements applicable to the area under section 110 and part D.

EPA notes that it has previously interpreted section 107(d)(3)(E) to mean that the requirements applicable to a redesignation request are those that became applicable prior to or at the time of the submission of the request. *See* Memorandum dated September 4, 1992, from John Calcagni, Director, Air Quality Management Division to Regional Air Directors, entitled ''Procedures for Processing Requests to Redesignate Areas to Attainment''. (EPA has followed this interpretation in numerous redesignations. *See, e.g.,* 59 FR 35044 and 59 FR 54391 (Indiana), 59 FR 65719 (West Virginia), 59 FR 45978 (West Virginia)). In the case of the redesignation requests submitted for Pittsburgh and Reading on November 13, 1993, that means that EPA would not require a 15% RFP plan, attainment demonstration, or section 172(c)(9) contingency measures to be submitted and approved in order to determine that the applicable requirements have been met under section 107(d)(3)(E)(v) because SIP revisions to comply with those requirements were not due until November 15, 1993 (*see* sections 172(b) and 182(b)(1)(A)). EPA also notes that the determination being made in this notice does not eliminate the applicability of other requirements to the Pittsburgh and Reading areas, such as the RACT requirements of section 182(b)(2) or the requirements of section 184(b) that apply to areas within the Northeast Ozone Transport Region.

Furthermore, for another reason, even without the action being taken with this notice, the submission and approval of section 172(c)(9) contingency measures would not have been required in order for the November 13, 1993 redesignation requests to be approved in accordance with pre-existing EPA policy since EPA has also long interpreted section 172(c)(9) as not being applicable to areas attaining the NAAQS.

As stated in the DFR, the General Preamble for the Interpretation of Title I of the Clean Air Act Amendments of 1990 (57 FR 13498) states that, in the context of a discussion of the requirements applicable to redesignation requests, that the ''requirements for RFP will not apply in evaluating a request for redesignation to attainment since, at a minimum, the air quality data for the area must show that the area has already attained. Showing that the State will make RFP towards attainment will, therefore, have no meaning at that point'' (57 FR 13564). EPA restated this interpretation in a memorandum dated September 4, 1992, from John Calcagni, Director, Air Quality Management Division, to Regional Air Directors, entitled ''Procedures for Processing Requests to Redesignate Areas to Attainment'' which states that RFP requirements ''will not apply for redesignations because they only have meaning for areas not attaining the standard''.

Comment #2 The CAC stated that EPA's May 26, 1995 notice illegally waived the 15% plan and RFP requirements. According to the commenter, section 182(b) required moderate areas such as Reading and Pittsburgh to develop and submit 15% plans and the 15% plan requirement is not a *de minimis* requirement that can be waived. The commenter also stated that the most compelling reason for a 15% plan in Reading and Pittsburgh is the need to protect public health as both areas have experienced high levels of air pollution.

Response #2 As explained in the May 26, 1995 notice and the May 10,

1995 memorandum from John S. Seitz, Director, Office of Air Quality Planning and Standards, to the Regional Air Directors entitled ''Reasonable Further Progress, Attainment Demonstration, and Related Requirements for Ozone Nonattainment Areas Meeting the Ozone National Ambient Air Quality Standard'', establishing the policy underlying that notice, EPA believes that it is reasonable to interpret the language of the pertinent statutory provisions so as not to require a submission of the 15% RFP plan from an area that is attaining the standard for so long as the area continues to attain the standard because the purpose of an RFP plan, as stated explicitly in section 171(1) of the CAA, is to ensure attainment by the applicable attainment date. Once an area has attained the standard, the stated purpose of the RFP requirement will have already been fulfilled. This interpretation is not based on EPA's *de minimis* authority (*see Alabama Power Co.* v. *Costle,* 636 F.2d 323, 360–61 (D.C. Cir. 1979)), but on the language of the pertinent statutory provisions. In sum, the commenter has not provided any rationale to persuade EPA that its interpretation is not reasonable. With respect to air quality levels, this action is premised on the determination that both Pittsburgh and Reading have attained the ozone NAAQS, which is set at a level to protect public health, allowing an ample margin of safety. Both Pittsburgh and Reading attained the standard prior to the submission of the redesignation requests in November 1993 and continue to attain the standard as there have been no monitored violations of the standard since then.

Comment #3 The CAC also commented that Reading and Pittsburgh have no VOC control strategy and that to consider redesignating the areas without reformulated gasoline and enhanced inspection and maintenance is without basis in the law or common sense.

Response #3 As noted earlier, this action is not a redesignation. Whether the redesignation requests for Pittsburgh and Reading satisfy the requirements of section 107(d)(3)(E) is a matter for a separate proceeding regarding those requests. Furthermore, EPA notes that VOC controls have been adopted and are in place in both Reading and Pittsburgh, e.g., VOC RACT control measures.

Comment #4 The CAC stated that EPA itself pointed out that its action in determining that the Pittsburgh-Beaver Valley and Reading areas have attained the NAAQS and not requiring the submittal of a 15% RFP plan does not shield an area from future EPA action to require emission reductions where there is evidence showing that the subject area's emissions contribute to attainment/maintenance problems in other nonattainment areas. The commenter noted that EPA had determined in the January 24, 1995, ''Final Rule on Ozone Transport Commission; Low Emission Vehicle Program for the Northeast Ozone Transport Region'' (60 FR 4712) (OTC LEV Program) that ozone and emissions from western Pennsylvania contribute to the ozone problems in the Philadelphia nonattainment area and stated that it is inequitable to require a 15% RFP plan for Philadelphia but not for areas that contribute to Philadelphia's air quality problem.

Response #4 The issue concerning the applicability of RFP, attainment demonstration and related requirements must be considered independently from the issue of EPA's authority to impose requirements relative to intrastate transport of emissions. Today's rulemaking action only determines that the Pittsburgh-Beaver Valley and Reading areas have attained the NAAQS and states that the CAA does not require the submittal of a 15% RFP plan and other related requirements so long as the areas continue to attain the standard.

EPA has separate authority under sections 110(a)(2) (A) and (D) to require that SIPs include adequate provisions prohibiting sources in one area from contributing significantly to nonattainment or interfering with maintenance in any other area. However, a general finding of SIP inadequacy is not warranted at this time for two reasons. First, Pennsylvania is part of the Ozone Transport Region (OTR) and not requiring RFP and attainment demonstration SIP revisions does not relieve the Pittsburgh-Beaver Valley and Reading nonattainment areas from meeting the emission reduction requirements of section 184(b). This section requires States in the OTR to implement specific control measures in all areas of the OTR regardless of attainment status. These control measures are also the creditable emission reductions commonly used by States to meet the 15% RFP plan requirement. Consequently, these areas may in fact obtain the 15% reduction in VOC emissions called for by the 15% RFP plan requirement.

Furthermore, EPA determined in the OTC LEV Program Rule that emission reductions achieved by the OTC LEV program applied throughout the OTR are necessary to bring certain nonattainment areas in the OTR into attainment (including maintenance) of the ozone standard. In addition to the emission reductions from the OTC LEV program, emission reductions from other regional strategies, such as the OTC Memorandum of Understanding to adopt stringent controls on NOx emissions from stationary sources, which was signed by Pennsylvania, are anticipated. As EPA concluded in the OTC LEV Program Rule, however, the States in the OTR should be allowed the opportunity to address pollution transport in the attainment demonstrations that will be forthcoming from the nonattainment areas of the OTR before the Agency exercises its SIP-call authority more broadly to address non-LEV deficiencies. *See* 60 FR 4717–18 (Jan. 24, 1995).

Comment #5 The South Western Pennsylvania Growth Alliance (SWPGA) and Greater Pittsburgh Chamber of Commerce submitted comments supporting EPA's rulemaking. In addition, they submitted comments concerning issues relevant to the redesignation of the Pittsburgh-Beaver Valley area.

Response #5 EPA acknowledges these comments. However, as stated in the DFR, EPA is only determining that the Pittsburgh-Beaver Valley and Reading areas have attained the NAAQS and that the submittal of a 15% RFP plan and ozone attainment demonstration and the requirements of section 172(c)(9) concerning contingency measures is not required by the CAA so long as the areas do not violate the ozone standard.

Final Action

EPA is making a final determination that the Pittsburgh-Beaver Valley and Reading ozone nonattainment areas have attained the ozone standard and continue to attain the standard at this time. As a consequence of this determination, the requirements of section 182(b)(1) concerning the submission of the 15% RFP plan and ozone attainment demonstration and the requirements of section 172(c)(9) concerning contingency measures are not applicable to the area so long as the area does not violate the ozone standard. Since these areas will not be required to submit 15% RFP plans or attainment demonstrations, these areas will not be in the control strategy period for conformity purposes for so long as the areas do not violate the standard. However, the Pittsburgh-Beaver Valley and Reading areas, which are already demonstrating conformity to a submitted maintenance plan pursuant to 40 CFR part 51, § 51.448(i), may continue to do so, or the Commonwealth may elect to withdraw

the applicability of the submitted maintenance plan budget for conformity purposes until the maintenance plan is approved. The applicability may be withdrawn through the submission of a letter from the Governor or his or her designee. If the applicability of the submitted maintenance plan budget is withdrawn for transportation conformity purposes, the build/no-build and less-than-1990 tests will apply until the maintenance plan is approved.

EPA emphasizes that these determinations are contingent upon the continued monitoring and continued attainment and maintenance of the ozone NAAQS in the affected area. When and if a violation of the ozone NAAQS is monitored in the Pittsburgh-Beaver Valley or Reading nonattainment areas (consistent with the requirements contained in 40 CFR part 58 and recorded in AIRS), EPA will provide notice to the public in the **Federal Register**. Such a violation would mean that the area would thereafter have to address the requirements of section 182(b)(1) and section 172(c)(9) since the basis for the determination that they do not apply would no longer exist.

As a consequence of the determination that these areas have attained the NAAQS and that the RFP and attainment demonstration requirements of section 182(b)(1) do not presently apply, the sanctions clocks started by EPA on January 18, 1994, for failure to submit these requirements are hereby stopped since the deficiency for which the clock was started no longer exists.

EPA finds that there is good cause for this action to become effective immediately upon publication because a delayed effective date is unnecessary due to the nature of this action, which is a determination that certain Clean Air Act requirements do not apply for so long as the areas continue to attain the standard. The immediate effective date for this action is authorized under both 5 U.S.C. 553(d)(1), which provides that rulemaking actions may become effective less than 30 days after publication if the rule ''grants or recognizes an exemption or relieves a restriction'' and section 553(d)(3), which allows an effective date less than 30 days after publication ''as otherwise provided by the agency for good cause found and published with the rule.''

Under the Regulatory Flexibility Act, 5 U.S.C. 600 *et seq.*, EPA must prepare a regulatory flexibility analysis assessing the impact of any proposed or final rule on small entities. 5 U.S.C. 603 and 604. Alternatively, EPA may certify that the rule will not have a significant impact on a substantial number of small entities. Small entities include small businesses, small not-for-profit enterprises, and government entities with jurisdiction over populations of less than 50,000. Today's determination does not create any new requirements, but suspends the indicated requirements. Therefore, because this notice does not impose any new requirements, I certify that it does not have a significant impact on any small entities affected.

Under Section 202 of the Unfunded Mandates Reform Act of 1995 (''Unfunded Mandates Act''), signed into law on March 22, 1995, EPA must prepare a budgetary impact statement to accompany any proposed or final that includes a Federal mandate that may result in estimated costs to State, local, or tribal governments in the aggregate; or to the private sector, of $100 million or more. Under section 205, EPA the most cost-effective and least burdensome alternative that achieves the objectives of the rule and is consistent with statutory requirements. Section 203 requires EPA to establish a plan for informing and advising any small governments that may be significantly or uniquely impacted by the rule.

EPA has determined that today's final action does not include a Federal mandate that may result in estimated costs of $100 million or more to either State, local, or tribal governments in the aggregate, or to the private sector. This Federal action imposes no new Federal requirements. Accordingly, no additional costs to State, local, or tribal governments, or to the private sector, result from this action.

Under section 307(b)(1) of the Clean Air Act, petitions for judicial review of this final rule determining that the Pittsburgh-Beaver Valley and Reading ozone nonattainment areas have attained the NAAQS for ozone and that certain RFP and attainment demonstration requirements of sections 182(b)(1) and 172(c)(9) no longer apply must be filed in the United States Court of Appeals for the appropriate circuit by September 18, 1995. Filing a petition for reconsideration by the Administrator of this final rule does not affect the finality of this rule for the purposes of judicial review nor does it extend the time within which a petition for judicial review may be filed, and shall not postpone the effectiveness of such rule or action. This action may not be challenged later in proceedings to enforce its requirements. (See section 307(b)(2).)

List of Subjects in 40 CFR Part 52

Environmental protection, Air pollution control, Hydrocarbons, Intergovernmental relations, Nitrogen dioxide, Ozone.

Dated: June 10, 1995.

Stanley L. Laskowski,

Acting Regional Administrator, Region III.

40 CFR part 52, subpart NN of chapter I, title 40 is amended as follows:

PART 52—[AMENDED]

1. The authority citation for part 52 continues to read as follows:

Authority: 42 U.S.C. 7401–7671q.

Subpart NN—Pennsylvania

2. Section 52.2037 is amended by adding paragraph (b) to read as follows:

§ 52.2037 Control Strategy: Carbon monoxide and ozone (hydrocarbons).

* * * * *

(b)(1) Determination—EPA has determined that, as of July 19, 1995, the Pittsburgh-Beaver Valley ozone nonattainment area has attained the ozone standard and that the reasonable further progress and attainment demonstration requirements of section 182(b)(1) and related requirements of section 172(c)(9) of the Clean Air Act do not apply to this area for so long as the area does not monitor any violations of the ozone standard. If a violation of the ozone NAAQS is monitored in the Pittsburgh-Beaver Valley ozone nonattainment area, these determinations shall no longer apply.

(2) Determination—EPA has determined that, as of July 19, 1995, the Reading ozone nonattainment area has attained the ozone standard and that the reasonable further progress and attainment demonstration requirements of section 182(b)(1) and related requirements of section 172(c)(9) of the Clean Air Act do not apply to this area for so long as the area does not monitor any violations of the ozone standard. If a violation of the ozone NAAQS is monitored in the Reading ozone nonattainment area, these determinations shall no longer apply.

[FR Doc. 95–17669 Filed 7–18–95; 8:45 am]

BILLING CODE 6560–50–P

40 CFR Part 180

[PP 4F4402/R2149; FRL–4963–6]

RIN 2070–AB78

Inclusion Bodies of Multi-Nuclear Polyhedrosis Virus of Anagrapha Falcifera; Exemption From the Requirement of a Tolerance

AGENCY: Environmental Protection Agency (EPA).

ACTION: Final rule.

SUMMARY: This rule establishes an exemption from the requirement of a pesticide tolerance for residues of the microbial pest control agent inclusion bodies of the multi-nuclear polyhedrosis virus of *Anagrapha falcifera* (celery looper) in or on all raw agricultural commodities. Biosys requested this tolerance exemption that eliminates the need to establish a maximum permissible level for residues of *Anagrapha falcifera* multi-nuclear polyhedrosis virus.

EFFECTIVE DATE: This regulation becomes effective July 19, 1995.

ADDRESSES: Written objections and hearing requests, identified by the document control number, [PP 4F4402/R2149], may be submitted to: Hearing Clerk (1900), Environmental Protection Agency, Rm. M3708, 401 M St., SW., Washington, DC 20460. Fees accompanying objections shall be labeled ''Tolerance Petition Fees'' and forwarded to: EPA Headquarters Accounting Operations Branch, OPP (Tolerance Fees), P.O. Box 360277M, Pittsburgh, PA 15251. A copy of any objections and hearing requests filed with the Hearing Clerk should be identified by the document control number and submitted to: Public Response and Program Resources Branch, Field Operations Division (7506C), Office of Pesticide Programs, Environmental Protection Agency, 401 M St., SW., Washington, DC 20460. In person, bring copy of objections and hearing requests to Rm. 1132, CM #2, 1921 Jefferson Davis Hwy., Arlington, VA 22202.

A copy of objections and hearing requests filed with the Hearing Clerk may also be submitted electronically by sending electronic mail (e-mail) to: opp-docket@epamail.epa.gov. Copies of objections and hearing requests must be submitted as an ASCII file avoiding the use of special characters and any form of encryption. Copies of objections and hearing requests will also be accepted on disks in WordPerfect in 5.1 file format or ASCII file format. All copies of objections and hearing requests in electronic form must be identified by the docket number [PP 4F4402/R2149]. No Confidential Business Information (CBI) should be submitted through e-mail. Electronic copies of objections and hearing requests on this rule may be filed online at many Federal Depository Libraries. Additional information on electronic submissions can be found below in this document.

FOR FURTHER INFORMATION CONTACT: By mail: Linda Hollis, Biopesticides and Pollution Prevention Division (7501W), Office of Pesticide Programs, Environmental Protection Agency, 401 M St., SW., Washington, DC 20460. Office location and telephone number: CS #1, 5th Floor, 2800 Crystal Drive, Crystal City, VA 22202, (703) 308–8733; e-mail: hollis.linda@epamail.epa.gov.

SUPPLEMENTARY INFORMATION: EPA issued a notice, published in the **Federal Register** of November 2, 1994 (59 FR 54902), which announced that Biosys, Palo Alto, CA 94303, had submitted a pesticide petition, PP 4F4402, to EPA requesting that the Administrator, pursuant to section 408(d) of the Federal Food, Drug, and Cosmetic Act (FFDCA), 21 U.S.C. 346a(d), exempt from the requirement of a tolerance the residues of the microbial pest control agent inclusion bodies of the multi-nuclear polyhedrosis virus of *Anagrapha falcifera* in or on all raw agricultural commodities when used to control certain lepidopteran pest species.

No comments were received in response to the notice of filing.

Residue Chemistry Data

Residue chemistry data are necessary only if the submitted toxicology studies indcate that additional Tier II or III toxicology data would be required as specified in 40 CFR 158.165(e). The submitted toxicology data for this use indicate that the product is of low mammalian toxicity; therefore, Tier II or III data were not required.

Toxicology Data

Toxicology data considered in support of this exemption from the requirement of a tolerance were satisfied via data waivers from the open scientific literature with the exception of an acute oral toxicity study. Waivers include an acute dermal toxicity study in the guinea pig, an acute inhalation toxicity study in the rat, a primary eye irritation study in the rabbit, and a cell culture study. Findings from the open scientific literature showed no toxic, pathogenic, or adverse effects.

Reference Dose (RfD) and maximum permissible intake (MPI) considerations are not relevant to this petition because of this low toxicity and lack of pathogenicity or infectivity as reported in the open scientific literature.

Based on the information cited above, the Agency concludes that the establishment of a tolerance for the active ingredient *Anagrapha falcifera* multi-nuclear polyhedrosis virus is not necessary to protect the public health. Therefore, 40 CFR part 180 is amended as set forth below.

Any person adversely affected by this regulation may, within 30 days after publication of this document in the **Federal Register**, file written objections to the regulation and may also request a hearing on those objections. Objections and hearing requests must be filed with the Hearing Clerk, at the address given above (40 CFR 178.20). A copy of the objections and/or hearing requests filed with the Hearing Clerk should be submitted to the OPP docket for this rulemaking. The objections submitted must specify the provisions of the regulation deemed objectionable and the grounds for the objections (40 CFR 178.25). Each objection must be accompanied by the fee prescribed by 40 CFR 180.33(i). If a hearing is requested, the objections must include a statement of the factual issue(s) on which a hearing is requested, the requestor's contentions on such issues, and a summary of any evidence relied upon by the objector (40 CFR 178.27). A request for a hearing will be granted if the Administrator determines that the material submitted shows the following: There is genuine and substantial issue of fact; there is a reasonable possibility that available evidence identified by the requestor would, if established, resolve one or more of such issues in favor of the requestor, taking into account uncontested claims or facts to the contrary; and resolution of the factual issue(s) in the manner sought by the requestor would be adequate to justify the action requested (40 CFR 178.32).

A record has been established for this rulemaking under docket number [PP 4F4402/R2149] (including objections and hearing requests submitted electronically as described below). A public version of this record, including printed, paper versions of electronic comments, which does not include any information claimed as CBI, is available for inspection from 8 a.m. to 4:30 p.m., Monday through Friday, excluding legal holidays. The public record is located in Room 1132 of the Public Response and Program Resources Branch, Field Operations Division (7506C), Office of Pesticide Programs, Environmental Protection Agency, Crystal Mall #2,

1921 Jefferson Davis Highway, Arlington, VA.

Written objections and hearing requests, identified by the document control number [PP 4F4402/R2149], may be submitted to the Hearing Clerk (1900), Environmental Protection Agency, Rm. 3708, 401 M St., SW., Washington, DC 20460.

A copy of electronic objections and hearing requests filed with the Hearing Clerk can be sent directly to EPA at:

opp-Docket@epamail.epa.gov

A copy of electronic objections and hearing requests filed with the Hearing Clerk must be submitted as an ASCII file avoiding the use of special characters and any form of encryption.

The official record for this rulemaking, as well as the public version, as described above will be kept in paper form. Accordingly, EPA will transfer any objections and hearing requests received electronically into printed, paper form as they are received and will place the paper copies in the official rulemaking record which will also include all objections and hearing requests submitted directly in writing. The official rulemaking record is the paper record maintained at the address in **ADDRESSES** at the beginning of this document.

Under Executive Order 12866 (58 FR 51735, October 4, 1993), the Agency must determine whether the regulatory action is ''significant'' and therefore subject to all the requirements of the Executive Order (i.e., Regulatory Impact Analysis, review by the Office of Management and Budget (OMB)). Under section 3(f), the order defines ''significant'' as those actions likely to lead to a rule (1) having an annual effect on the economy of $100 million or more, or adversely and materially affecting a sector of the economy, productivity, competition, jobs, the environment, public health or safety, or State, local or tribal governments or communities (also known as ''economically significant''); (2) creating serious inconsistency or otherwise interfering with an action taken or planned by another agency; (3) materially altering the budgetary impacts of entitlement, grants, user fees, or loan programs; or (4) raising novel legal or policy issues arising out of legal mandates, the President's priorities, or the principles set forth in this Executive Order.

Pursuant to the terms of this Executive Order, EPA has determined that this rule is not ''significant'' and is therefore not subject to OMB review.

Pursuant to the requirements of the Regulatory Flexibility Act (Pub. L. 96-354, 94 Stat. 1164, 5 U.S.C. 601-612), the Administrator has determined that regulations establishing new tolerances or raising tolerance levels or establishing exemptions from tolerance requirements do not have a significant economic impact on a substantial number of small entities. A certification statement to this effect was published in the **Federal Register** of May 4, 1981 (46 FR 24950).

List of Subjects in 40 CFR Part 180

Environmental protection, Administrative practice and procedure, Agricultural commodities, Pesticides and pests, Reporting and recordkeeping requirements.

Dated: July 3, 1995.

Daniel M. Barolo,

Director, Office of Pesticide Programs.

Therefore, 40 CFR part 180 is amended as follows:

PART 180—[AMENDED]

1. The authority citation for part 180 continues to read as follows:

Authority: 21 U.S.C. 346a and 371.

2. In subpart D, by adding new § 180.1149, to read as follows:

§ 180.1149 Inclusion bodies of the multi-nuclear polyhedrosis virus of Anagrapha falcifera; exemption from the requirement of a tolerance.

The microbial pest control agent inclusion bodies of the multi-nuclear polyhedrosis virus of *Anagrapha falcifera* is exempted from the requirement of a tolerance in or on all raw agricultural commodities when used to control certain lepidopteran pest species.

[FR Doc. 95–17602 Filed 7–18–95; 8:45 am]

BILLING CODE 6560–50–F

---

40 CFR Part 180

[PP 0F3885/R2152; FRL–4966–5]

RIN 2070–AB78

Burkholderia (Pseudomonas) Cepacia Type Wisconsin; Tolerance Exemption

AGENCY: Environmental Protection Agency (EPA).

ACTION: Final rule.

SUMMARY: This document establishes an exemption from the requirement of a tolerance for residues of the biological pesticide *Burkholderia (Pseudomonas) cepacia* type Wisconsin in or on all raw agricultural commodities, resulting from use on plant roots or seedling roots. EPA is issuing this regulation on its own initiative. The rule amends the existing tolerance exemption for this organism, which is limited to the seed treatment use.

EFFECTIVE DATE: This regulation becomes effective July 19, 1995.

ADDRESSES: Written objections and hearing requests, identified by the document control number, [PP 0F3885/R2152], may be submitted to: Hearing Clerk (1900), Environmental Protection Agency, Rm. M3708, 401 M St., SW., Washington, DC 20460. Fees accompanying objections and hearing requests shall be labeled ''Tolerance Petition Fees'' and forwarded to: EPA Headquarters Accounting Operations Branch, OPP (Tolerance Fees), P.O. Box 360277M, Pittsburgh, PA 15251. A copy of any objections and hearing requests filed with the Hearing Clerk should be identified by the document control number and submitted to: Public Response and Program Resources Branch, Field Operations Division (7506C), Office of Pesticide Programs, Environmental Protection Agency, 401 M St., SW., Washington, DC 20460. In person, bring copy of objections and hearing requests to: Rm. 1132, CM #2, 1921 Jefferson Davis Hwy., Arlington, VA 22202.

A copy of objections and hearing requests filed with the Hearing Clerk may also be submitted electronically by sending electronic mail (e-mail) to: opp-docket@epamail.epa.gov. Copies of objections and hearing requests must be submitted as an ASCII file avoiding the use of special characters and any form of encryption. Copies of objections and hearing requests will also be accepted on disks in WordPerfect in 5.1 file format or ASCII file format. All copies of objections and hearing requests in electronic form must be identified by the docket number [PP 0F3885/R2152]. No Confidential Business Information (CBI) should be submitted through e-mail. Electronic copies of objections and hearing requests on this rule may be filed online at many Federal Depository Libraries. Additional information on electronic submissions can be found below in this document.

FOR FURTHER INFORMATION CONTACT: By mail: Denise Greenway, Biopesticide and Pollution Prevention Division (7501W), Environmental Protection Agency, 401 M St., SW., Washington, DC 20460. Office location and telephone number: Rm. CS51L6, Crystal Station #1, Arlington, VA 22202, (703)-308-8263; e-mail: greenway.denise@-epamail.epa.gov.

SUPPLEMENTARY INFORMATION: In the **Federal Register** of June 7, 1995 (60 FR 30048), EPA issued a proposed rule that

gave notice that Stine Microbial Products, 4722 Pflaum Rd., Madison, WI 53704, had proposed a new use site, plant roots or seedling roots, for its biological pesticide *Burkholderia (Pseudomonas) cepacia* type Wisconsin for residues in or on all raw agricultural commodities. An exemption from the requirement of a tolerance had been established under 40 CFR 180.1115 for use of the chemical as a seed treatment. *Burkholderia (Pseudomonas) cepacia* type Wisconsin applied to plant roots or seedling roots will colonize the developing root system, and by producing antibiotics, protect the seedling or plant from a range of plant pathogenic fungi and nematodes. The Agency has determined that this presents no new hazard issues and that the originally submitted data can support the registration for use as a soil, seed, or seedling treatment.

There were no comments or requests for referral to an advisory committee received in response to the proposed rule.

The data submitted with the proposal and other relevant material have been evaluated and discussed in the proposed rule. Based on the data and information considered, the Agency concludes that the tolerance exemption will protect the public health. Therefore, the tolerance exemption is established as set forth below.

Any person adversely affected by this regulation may, within 30 days after publication of this document in the **Federal Register,** file written objections and/or request a hearing with the Hearing Clerk, at the address given above (40 CFR 178.20). A copy of the objections and/or hearing requests filed with the Hearing Clerk should be submitted to the OPP docket for this rulemaking. The objections submitted must specify the provisions of the regulation deemed objectionable and the grounds for the objections (40 CFR 178.25). Each objection must be accompanied by the fee prescribed by 40 CFR 180.33(i). If a hearing is requested, the objections must include a statement of the factual issue(s) on which a hearing is requested, the requestor's contentions on such issues, and a summary of any evidence relied upon by the objector (40 CFR 178.27). A request for a hearing will be granted if the Administrator determines that the material submitted shows the following: There is a genuine and substantial issue of fact; there is a reasonable possibility that available evidence identified by the requestor would, if established, resolve one or more of such issues in favor of the requestor, taking into account uncontested claims or facts to the contrary; and resolution of the factual issue(s) in the manner sought by the requestor would be adequate to justify the action requested (40 CFR 178.32).

A record has been established for this rulemaking under docket number [PP 0F3885/R2152] (including any objections and hearing requests submitted electronically as described below). A public version of this record, including printed, paper versions of electronic comments, which does not include any information claimed as CBI, is available for inspection from 8 a.m. to 4:30 p.m., Monday through Friday, excluding legal holidays. The public record is located in Room 1132 of the Public Response and Program Resources Branch, Field Operations Division (7506C), Office of Pesticide Programs, Environmental Protection Agency, Crystal Mall #2, 1921 Jefferson Davis Highway, Arlington, VA.

Written objections and hearing requests, identified by the document control number [0F3885/R2152], may be submitted to the Hearing Clerk (1900), Environmental Protection Agency, Rm. 3708, 401 M St., SW., Washington, DC 20460.

A copy of electronic objections and hearing requests filed with the Hearing Clerk can be sent directly to EPA at:

opp-Docket@epamail.epa.gov

A copy of electronic objections and hearing requests filed with the Hearing Clerk must be submitted as an ASCII file avoiding the use of special characters and any form of encryption.

The official record for this rulemaking, as well as the public version, as described above will be kept in paper form. Accordingly, EPA will transfer any objections and hearing requests received electronically into printed, paper form as they are received and will place the paper copies in the official rulemaking record which will also include all objections and hearing requests submitted directly in writing. The official rulemaking record is the paper record maintained at the address in **ADDRESSES** at the beginning of this document.

Under Executive Order 12866 (58 FR 51735, Oct. 4, 1993), the Agency must determine whether the regulatory action is ''significant'' and therefore subject to review by the Office of Management and Budget (OMB) and the requirements of the Executive Order. Under section 3(f), the order defines a ''significant regulatory action'' as an action that is likely to result in a rule (1) having an annual effect on the economy of $100 million or more, or adversely and materially affecting a sector of the economy, productivity, competition, jobs, the environment, public health or safety, or State, local, or tribal governments or communities (also referred to as ''economically significant''); (2) creating serious inconsistency or otherwise interfering with an action taken or planned by another agency; (3) materially altering the budgetary impacts of entitlement, grants, user fees, or loan programs or the rights and obligations of recipients thereof; or (4) raising novel legal or policy issues arising out of legal mandates, the President's priorities, or the principles set forth in this Executive Order.

Pursuant to the terms of the Executive Order, EPA has determined that this rule is not ''significant'' and is therefore not subject to OMB review.

Pursuant to the requirements of the Regulatory Flexibility Act (Pub. L. 96-354, 94 Stat. 1164, 5 U.S.C. 601-612), the Administrator has determined that regulations establishing new tolerances or raising tolerance levels or establishing exemptions from tolerance requirements do not have a significant economic impact on a substantial number of small entities. A certification statement to this effect was published in the **Federal Register** of May 4, 1981 (46 FR 24950).

List of Subjects in 40 CFR Part 180

Environmental protection, Administrative practice and procedure, Agricultural commodities, Pesticides and pests, Reporting and recordkeeping requirements.

Dated: July 12, 1995.

Janet L. Andersen,

Acting Director, Biopesticides and Pollution Prevention Division, Office of Pesticide Programs.

Therefore, 40 CFR part 180 is amended as follows:

PART 180—[AMENDED]

1. The authority citation for part 180 continues to read as follows:

Authority: 21 U.S.C. 346a and 371.

2. Section 180.1115 is revised to read as follows:

§ 180.1115 Burkholderia (Pseudomonas) cepacia type Wisconsin; exemption from the requirement of a tolerance.

The biological pesticide *Burkholderia (Pseudomonas) cepacia* type Wisconsin is exempted from the requirement of a tolerance in or on all raw agricultural commodities when applied to plant roots and seedling roots, or as a seed treatment for growing agricultural crops

in accordance with good agricultural practices.

[FR Doc. 95–17752 Filed 7–14–95; 4:25 pm]
BILLING CODE 6560–50–F

DEPARTMENT OF COMMERCE

National Oceanic and Atmospheric Administration

50 CFR Part 663

[Docket No. 941265–4365; I.D. 071195B]

Pacific Coast Groundfish Fishery; Miscellaneous Management Measures

AGENCY: National Marine Fisheries Service (NMFS), National Oceanic and Atmospheric Administration (NOAA), Commerce.

ACTION: Inseason adjustment of trip limits; end of nontrawl sablefish regular season.

SUMMARY: NMFS announces inseason adjustments to the trip limits for widow rockfish and trawl-caught sablefish, and announces the ending date of the regular season for the nontrawl sablefish limited entry fishery. These actions are intended to enable the 1995 harvest guidelines for widow rockfish and trawl-caught sablefish to be achieved and to provide advance notice of the duration of the nontrawl sablefish regular season.

DATES: The trip limits for widow rockfish and trawl-caught sablefish are effective July 14, 1995, until the effective date of the 1996 annual specifications and management measures for the Pacific Coast Groundfish Fishery, which will be published in the **Federal Register**. The closing date of the nontrawl sablefish regular season and the reimposition of the daily trip limits are effective at 12 noon (local time), August 13, 1995, until the effective date of the 1996 annual specifications and management measures for the Pacific Coast Groundfish Fishery, which will be published in the **Federal Register**. Comments will be accepted until July 31, 1995.

ADDRESSES: Comments on these actions should be sent to Mr. William Stelle, Jr., Director, Northwest Region, National Marine Fisheries Service, 7600 Sand Point Way NE., BIN C15700, Bldg. 1, Seattle, WA 98115–0070; or Ms. Hilda Diaz-Soltero, Director, Southwest Region, National Marine Fisheries Service, 501 West Ocean Blvd., Suite 4200, Long Beach, CA 90802–4213. Information relevant to these actions has been compiled in aggregate form and is available for public review during business hours at the office of the Director, Northwest Region, NMFS (Regional Director).

FOR FURTHER INFORMATION CONTACT: William L. Robinson, 206–526–6140; or Rodney R. McInnis, 310–980–4040.

SUPPLEMENTARY INFORMATION: These actions are authorized by the Pacific Coast Groundfish Fishery Management Plan, which governs the harvest of groundfish in the U.S. exclusive economic zone off the coasts of Washington, Oregon, and California.

Adjustment to Trip Limits

On January 9, 1995, the 1995 Annual Specifications and Management Measures for Pacific Coast Groundfish Fishery were published in the **Federal Register** (60 FR 2331–2344). At its June 1995 meeting in Clackamas, OR, the Pacific Fishery Management Council (Council) considered the best available scientific information, comments from its advisory committees, and public testimony before recommending adjustments to the management measures for the commercial groundfish fishery. Because the Council meeting was held the last week in June, time constraints prevented these actions from being effective July 1, 1995, the beginning date for the next cumulative monthly trip limits. These less restrictive limits are being implemented during the month of July; however, the cumulative trip limits in effect at the beginning of July remain in effect until the effective date of this inseason adjustment. A cumulative monthly trip limit is the maximum amount that may be taken and retained, possessed, or landed per vessel in a calendar month, without a limit on the number of landings or trips.

Widow Rockfish. The best available information through May 31, 1995, projected the total annual catch of widow rockfish to be 4,990 mt in 1995, almost 20 percent below the 6,500–mt harvest guideline. The current rate of landings would need to increase by almost 50 percent to enable the harvest guideline to be reached by the end of the year. Consequently, the Council recommended that the monthly cumulative trip limit be increased by 50 percent as quickly as possible, from 30,000 lb (13,608 kg) to 45,000 lb (20,412 kg). NMFS concurs with this recommendation to allow full achievement of the harvest guideline for widow rockfish.

Trawl-Caught Sablefish. On May 1, 1995, the cumulative monthly trip limit for trawl-caught sablefish was increased from 6,000 lb (2,722 kg) to 7,000 lb (3,175 kg) (60 FR 22303, May 5, 1995) and the ''per-trip'' limit of 1,000 lb (454 kg) or 33.333 percent of the thornyheads and Dover sole remained in effect. The best available information through May 31, 1995, projects a total annual harvest of 3,412 mt in 1995, 10 percent below the revised 3,803–mt limited entry allocation for the sablefish trawl fishery.

Sablefish often are caught with thornyheads and Dover sole, which are managed together as the ''DTS complex.'' Landings of shortspine thornyheads (one of the two thornyhead species) are higher than desired. However, a reduction in the current 3,000–lb (1361 kg) cumulative trip limit for shortspine thornyheads would most likely cause an increase in discards with little or no reduction in catch, because of thornyheads' close association in the catch with sablefish and Dover sole. The Council heard testimony that the current ''per-trip'' limit for sablefish could be encouraging a larger harvest of thornyheads, because fishers with more than 1,000 lb (454 kg) of sablefish on board, but less than one-third of the weight of thornyheads and Dover sole, would fish for additional amounts of the last two species to be within the percentage limit.

The Council recommended removing this ''per-trip'' sablefish limit (except for the 500–lb (227 kg) ''per-trip'' limit for sablefish smaller than 22 inches (56 cm) total length), while retaining the cumulative trip limits for sablefish and the DTS complex. Removing the ''per-trip'' limit will eliminate those discards that were made in excess of that limit, and will not encourage a large increase in sablefish landings because only small sablefish in very nearshore waters can be caught fairly selectively, and this harvest is constrained by the 500–lb (227–kg) trip limit on sablefish smaller than 22 inches (56 cm). NMFS concurs with the Council's recommendation, which is intended simultaneously to achieve the limited entry trawl allocation for sablefish, to eliminate the discard of sablefish caught in excess of the trip limit that now is removed, and to divert fishing effort from shortspine thornyheads.

Nontrawl Sablefish Season

The ''regular season'' for the limited entry nontrawl sablefish fishery begins at 12 noon on August 6, 1995, and ends when 70 percent (1,928 mt) of the 2,754–mt nontrawl allocation is projected to be taken. (The remainder of the allocation is to be taken in a mop-up fishery about 3 weeks later, if sufficient amounts remain.) The regulations at 50 CFR 663.23(b)(2)(ii) (60

FR 34472, July 3, 1995) state that the end of the regular season may be announced in the **Federal Register** either before or during the regular season. NMFS is announcing the closure date in advance of the regular season in 1995, because effort is expected to be so intense that there will be inadequate time to monitor landings and make a projection during the season. An early announcement enables fishers to plan more carefully and to decide whether to participate.

NMFS consulted with the Council and its Groundfish Management Team at the June, 1995, Council meeting and, based on the best available estimates of expected catch and effort, determined that 70 percent of the nontrawl allocation would be taken in 6–8 days. The Council recommended the midpoint of the range, 7 days, because even if the highest level of expected fishing effort occurred, the harvest guideline would not be exceeded during the regular season. NMFS concurs with the Council's recommendation, and announces that the regular season, which starts at 12 noon on August 6, 1995, will end just 7 days later, at 12 noon, August 13, 1995. Commencing at 12 noon, August 13, 1995, the following daily trip limits for nontrawl sablefish will resume: 300 lb (136 kg) per day north of 36° N. lat., and 350 lb (159 kg) per day south of 36° N. lat. (Daily trip limits apply to calendar days. Therefore, on August 13, 1995, a daily trip limit may be landed between 12 noon and midnight. At 0001 hours on August 14, 1995, daily trip limits will apply to the full 24 hours.) As in the past, a vessel must begin landing its catch before 12 noon August 13, or the daily trip limit will apply.

Further information regarding the nontrawl sablefish fishery and the closure before the start of the regular season are contained in the proposed and final rules for that action at 60 FR 11062 (March 1, 1995) and 60 FR 34472 (July 3, 1995), respectively.

NMFS Actions

NMFS announces the following changes to the 1995 fishery specifications and management measures published at 60 FR 2331–2344, January 9, 1995, as modified:

1. *Widow Rockfish*. Paragraph IV.B.(1) is revised to read as follows: ''(1) *Limited entry fishery*. The cumulative trip limit for widow rockfish is 45,000 lb (20,412 kg) per vessel per month. (Widow rockfish also are called brownies.)''

2. *Trawl-Caught Sablefish*. Paragraph IV.E.(3)(b)(ii)(*C*)is revised to read as follows: ''(*C*) In any trip, no more than 500 lb (227 kg) may be trawl-caught sablefish smaller than 22 inches (56 cm) total length.''

3. *Nontrawl Sablefish*. Paragraph IV.E.(3)(c) is revised to read as follows: ''(c) *Nontrawl trip and size limits*. The daily trip limits in paragraphs (i) and (ii) below, which apply to sablefish of any size, are in effect until 12 noon, August 3, 1995, at which time all fixed gear used to take and retain groundfish must be removed from EEZ waters according to the regulations at 50 CFR 663.23(b)(2). These same daily trip limits will be reimposed at 12 noon, August 13, 1995, the end of the regular season.

(i) *North of 36*° N. lat. The daily trip limit for sablefish taken and retained with nontrawl gear north of 36° N.lat. is 300 lb (136 kg).

(ii) *South of 36*° N. lat.. The daily trip limit for sablefish taken and retained with nontrawl gear south of 36° N. lat. is 350 lb (159 kg).

(iii) During the ''regular'' season, the only trip limit in effect applies to sablefish smaller than 22 inches (56 cm) total length, which may comprise no more than 1,500 lb (680 kg) or 3 percent of all legal sablefish on board, whichever is greater. (See paragraph IV.A.(6) regarding length measurement.)''

Classification

The determination to take this action is based on the most recent data available. The aggregate data upon which the determination is based are available for public inspection at the office of the Director, Northwest Region, NMFS (see **ADDRESSES**) during business hours. Because of the need for immediate action, and because the public had an opportunity to comment on these actions at the Council meeting, NMFS has determined that good cause exists for this notice to be published without affording a prior opportunity for public comment or a 30-day delayed effectiveness period. This action is taken under the authority of 50 CFR 663.23(b)(2) and (c)(1)(i)(A)and (E), and is exempt from review under E.O. 12866.

Dated: July 14, 1995.

Richard W. Surdi,

Acting Director, Office of Fisheries Conservation and Management, National Marine Fisheries Service.

[FR Doc. 95–17754 Filed 7–14–95; 4:25 pm]

BILLING CODE 3510–22–F

50 CFR Part 678

[I.D. 070795B]

Atlantic Shark Fisheries; Quota Adjustment

AGENCY: National Marine Fisheries Service (NMFS), National Oceanic and Atmospheric Administration (NOAA), Commerce.

ACTION: Adjustment to the second semi-annual 1995 quota for the Atlantic large coastal shark species group.

SUMMARY: NMFS announces that the catch of large coastal sharks in the Atlantic, Caribbean, and Gulf of Mexico was 1,602 metric tons (mt) during the first semi-annual 1995 season. Because of the overharvest of this category quota, the second semi-annual 1995 quota is adjusted accordingly. The adjusted quota for the period July 1 through December 31, 1995, is 968 metric tons (mt).

EFFECTIVE DATE: July 14, 1995.

FOR FURTHER INFORMATION CONTACT: C. Michael Bailey; 301–713–2347; Kevin B. Foster; 508–281–9260; or Michael E. Justen; 813–570–5305.

SUPPLEMENTARY INFORMATION: The Atlantic, Caribbean, and Gulf of Mexico shark fisheries are managed by NMFS according to the Fishery Management Plan (FMP) for Atlantic Sharks prepared by NMFS under authority of the Magnuson Fishery Conservation and Management Act (16 U.S.C. 1801 *et seq*.). Fishing by U.S. vessels is governed by regulations implementing the FMP at 50 CFR part 678.

Section 678.23(b)(1)(i) of the regulations provides for two semi-annual quotas of 1,285 mt of large coastal sharks to be harvested from Atlantic, Caribbean, and Gulf of Mexico waters by commercial fishermen. The first semi-annual quota was available for harvest from January 1 through June 30, 1995.

The Assistant Administrator for Fisheries, NOAA, is authorized under § 678.23(c) to adjust the semi-annual quota to reflect actual catches during the preceding semi-annual period. Final data indicate that the catch from January through May 31, 1995, of the large coastal shark species totaled 1,602 mt, which is 317 mt more than the established quota. Therefore, the quota for large coastal shark species for the second 1995 semi-annual period is decreased from 1,285 mt to 968 mt.

Classification

This rule is exempt from review under E.O. 12866.

Dated: July 13, 1995.

Richard W. Surdi,

Acting Director, Office of Fisheries Conservation and Management, National Marine Fisheries Service.

[FR Doc. 95–17682 Filed 7–14–95; 9:57 am]

BILLING CODE 3510–22–F

Proposed Rules

Federal Register
Vol. 60, No. 138
Wednesday, July 19, 1995

This section of the FEDERAL REGISTER contains notices to the public of the proposed issuance of rules and regulations. The purpose of these notices is to give interested persons an opportunity to participate in the rule making prior to the adoption of the final rules.

DEPARTMENT OF AGRICULTURE

Commodity Credit Corporation

7 CFR Part 1493

[RIN 0551–AA30]

Commodity Credit Corporation Supplier Credit Guarantee Program

AGENCY: Commodity Credit Corporation, USDA.

ACTION: Proposed rule with request for comment.

SUMMARY: The Commodity Credit Corporation (CCC) proposes to establish as a new subpart D of 7 CFR Part 1493, the Supplier Credit Guarantee Program (SCGP), as a variant of the Export Credit Guarantee Program (GSM–102), which is provided for under subpart B of 7 CFR Part 1493. The SCGP is designed to assist exporters of U.S. agricultural commodities who wish to provide relatively short term (up to 180 days) credits to their importers. Under SCGP, CCC will guarantee payment of such credits by the importer, and the exporter may assign such guarantees to an eligible U.S. financial institution.

The SCGP is designed to offer certain advantages to U.S. exporters and importers that are not available under standard GSM–102 terms. Specifically, under SCGP there will be no requirement of a foreign bank letter of credit to ensure payment of the export transaction. Instead, CCC will ensure payment of the obligation of the importer due the U.S. exporter. The importer will benefit by avoiding the cost of opening a bank letter of credit. In addition, there will be fewer delays associated with opening a letter of credit. Finally, because the importer, rather than a foreign bank, will be the borrower, the importer will enjoy the full benefit of the credit terms guaranteed by CCC.

While offering these advantages, SCGP poses corresponding financial risks to the CCC. To provide an incentive to U.S. exporters and their assignees to evaluate carefully the credit-worthiness of individual importers, CCC expects to announce lower levels of coverage for principal and/or interest under SCGP than under normal GSM–102 terms. Additionally, guarantee fees charged to exporters will likely be higher than GSM–102 fees for comparable credit periods.

Aside from these changes, CCC proposes to operate SCGP in essentially the same fashion as GSM–102, and under nearly identical regulatory provisions (except where conforming changes are required in light of unique SCGP features). Exporters who have established eligibility to participate in GSM–102 will automatically be eligible to participate in SCGP.

DATES: Comments on this proposed rule must be received by September 18, 1995 to be assured of consideration.

ADDRESSES: Comments must be submitted in writing to L.T. McElvain, Director, CCC Operations Division, Foreign Agricultural Service, U.S. Department of Agriculture (USDA), Ag Box 1035, Washington, DC 20250–1035; FAX (202) 720–2949. All comments received will be available for public inspection at the above address during regular business hours.

FOR FURTHER INFORMATION CONTACT: L.T. McElvain, Director, CCC Operations Division, at the address stated above. Telephone (202) 720–6211. The USDA prohibits discrimination in its programs on the basis of race, color, national origin, sex, religion, age, disability, political beliefs and marital or familial status. Persons with disabilities who require alternative means for communication of program information (braille, large print, audiotape, etc.) should contact the USDA Office of Communications at (202) 820–5881 (voice) or (202) 720–7808 (TDD).

SUPPLEMENTARY INFORMATION:

Executive Order 12866

This rule has been determined to be significant and was reviewed by the Office of Management and Budget (OMB) under Executive Order 12866.

Regulatory Flexibility Act

It has been determined that the Regulatory Flexibility Act is not applicable to this proposed rule since CCC is not required by 5 U.S.C. 553 or any other provision of law to publish a notice of rulemaking with respect to the subject matter of this rule.

Executive Order 12372

This program is not subject to the provisions of Executive Order 12372, which requires intergovernmental consultation with state and local officials. See the notice related to 7 CFR part 3015, subpart V, published at 48 FR 29115 (June 24, 1983).

Paperwork Reduction Act

The paperwork requirements which are imposed by the current regulations found at 7 CFR Part 1493 were approved by the OMB under the Paperwork Reduction Act of 1980. The OMB assigned number for those requirements is OMB No. 0551–0004. The public reporting burden for collections made under this new subpart D is estimated to average 0.18 hours per response, including time for reviewing instructions, serarching existing sources, gathering and maintaining the data needed, and completing and reviewing the collection of information. This proposed rule has been submitted for review. It is expected that OMB will assign it a control number for the purposes of the Paperwork Reduction Act. Send comments regarding this burden estimate or any other aspects of this collection, including suggestions for reducing this burden, to Department of Agriculuture, Clearance Officer, OIRA, Room 404–W, Washington D.C. 20250; and to the OMB, Paperwork Reduction Project, Washington, D.C. 20503.

Executive Order 12778

This proposed rule has been reviewed under the Executive Order 12778, Civil Justice Reform. The proposed rule would have preemptive effect with respect to any state or local laws, regulations, or policies which conflict with such provisions or which otherwise impede their full implementation. The rule would not have retroactive effect. The proposed rule requires that certain administrative remedies be exhausted before suit may be filed.

The USDA is committed to carrying out its statutory and regulatory mandates in a manner that best serves the public interest. Therefore, where legal discretion permits, the Department actively seeks to promulgate regulations that promote economic growth, create jobs, are minimally burdensome and are easy for the public to understand, use or comply with. In short, the Department

is committed to issuing regulations that maximize net benefits to society and minimize costs imposed by those regulations.

Preliminary Economic Impact Analysis

The Preliminary Economic Impact Analysis of the options considered in developing this proposed rule and the potential impact of the Supplier Credit Guarantee Program (SCGP) is available upon request from Mary T. Chambliss, Deputy Administrator, Export Credits, FAS/USDA, Ag Box 1030, Washington, DC 20250–1030: phone (202) 720–6301: fax (202) 720–0727. The analysis can be summarized as follows: USDA administers two active export credit guarantee programs: the Export Credit Guarantee Program (GSM–102) offering credit guarantees for up to 3 years, and the Intermediate Export Credit Guarantee Program (GSM–103) offering credit guarantees from 3-10 years. In the past two to three years, use of GSM–102/103 has been considerably below budgeted program levels. This has led CCC to consider new programs that could supplement the GSM–102/103 programs.

The program options considered were a Serial Guarantee Program under which CCC would issue a guarantee to a U.S. exporter covering payment by the foreign buyer for each of a series of ''back to back'' export deliveries in small unit volumes of fairly homogeneous commodities; a Short Term Insurance Program which would permit CCC to issue insurance policies directly to U.S. banks (and to exporters offering supplier credits) to cover credits extended to foreign buyers of U.S. agricultural commodities and products; and a SCGP which would be a variant of the GSM–102 program to assist exporters of U.S. agricultural commodities who wish to provide relatively short term (up to 180 days) credits to the importer.

Of the three options considered, the SCGP was determined to be the program that was most likely to satisfactorily address the problems that were causing under utilization of the GSM–102/103 programs. At the same time, the SCGP could be operated within the existing program level for the CCC export credit guarantee programs. A letter of credit would not be required from the foreign bank, allowing the importer to directly enjoy the benefits of credit terms extended by the exporter and guaranteed by CCC. Finally, it appeared that the most attractive features of the other options could be either built into existing GSM–102/103 regulations, or into the SCGP option.

Subsidy of $3.5 million for the SCGP was derived using costing and risk assessment methodologies and models similar to those used to develop cost estimates for the GSM–102/103 programs. However, as the program evolves, risk assessment techniques and perhaps models that appropriately capture economic and other defining characteristics of this program are likely to be developed for use in gauging future program costs. Benefits derived from implementing the SCGP would equal the costs of the program even if additionality of the SCGP were only slightly higher than one and one-half percent.

The SCGP will be implemented in early FY 1996 and will be administered under regulations published in the Federal Register and by Program Announcements and Notices to Participants issued by CCC. It will be implemented under the general administrative responsibility of the General Sales Manager (GSM), FAS, USDA. The review and payment of claims for loss will be administered by the Office of the Controller, CCC.

Request for Public Comment

Comments are requested with respect to this proposed rule and such comments shall be considered in developing the final rule.

Background

A. *Interchangeability of SCGP and GSM–102 program.*

The SCGP and GSM–102 program will be considered interchangeable mechanisms for advancing the purposes set forth in 7 CFR Part 1493, subpart A. Country allocations of credit guarantee availabilities for the two programs will be decided jointly, under the same overall country exposure limits, with the objective of achieving the best mix of the two types of guarantees.

B. *Description and advantages of SCGP.*

SCGP will offer certain advantages to U.S. exporters and importers that are not available under standard GSM–102 terms. Most importantly, exporters will be able to apply to CCC for guarantees of repayment of credits they extend to importers without the requirement that the importer cause to be opened, by an eligible foreign bank, a letter of credit. Under SCGP, CCC will guarantee payment of the importer (importer obligation) to the exporter. The importer will benefit by avoiding the cost of opening a bank letter of credit. In addition, there will be fewer delays associated with opening a letter of credit. Finally, because the importer, rather than a foreign bank, will be the borrower, the importer will enjoy the full benefit of the credit terms guaranteed by CCC.

C. *How certain SCGP provisions differ from GSM–102.*

While offering the above advantages, SCGP poses corresponding financial risks to the CCC. By taking importer risk, rather than foreign bank risk under standard GSM–102 terms, CCC recognizes that a higher rate of default in payments to exporters or their assignees could occur. Accordingly, the following SCGP features are modifications of GSM–102 program features.

(1) *Importer obligation.* The definition of importer obligation is found at § 1493.410(n). The importer obligation must be in the form of a fixed rate or a floating rate promissory note which conforms with the provisions set forth in § 1493.470. The promissory note(s) must provide for payment in U.S. dollars, on a specificed date, and must be made in favor of the exporter by the importer. In order to assure consistency, the promissory note(s) contains mandatory provisions, However, CCC gives program participants the choice of certain additional provisions which may be incorporated, without written consent of CCC, into the promissory note(s). No other form of importer obligation may be used.

(2) *Coverage.* To provide an incentive to U.S. exporters and their assignees to evaluate carefully the credit risk posed by individual importer, CCC expects to announce lower levels of coverage for principal and/or interest under SCGP than are available under current GSM–102 terms. The amount of coverage is not specified in the proposed regulations because CCC wishes to retain the ability to adjust coverage as necessary, given its experience in operating the program. At present, CCC is considering inaugurating the program with maximum principal coverage of 50 percent of port value, and no interest coverage. For illustrative purposes only, Appendix A to § 1493.530 uses 60 percent coverage to compute CCC's obligations under a hypothetical payment guarantee which provides for interest coverage as well. Comments are especially invited on the matter of coverage levels in the SCGP.

(3) *Guarantee fee.* Guarantee fees charged to exporters will likely be higher than GSM–102 fees for comparable credit periods. One approach being considered by CCC is charging a uniform fee (irrespective of the eligible country in which the importer is located and irrespective of the length of the credit period) in the

mid-point of the range of insurance premiums for good risk countries charged by Eximbank in its short-term, single-buyer insurance program. Currently, this would be a fee of approximately 95 cents per $100 of guarantee coverage. Fees cannot exceed $1.00 per $100 of guarantee coverage, in accordance with section 211(b)(1)(B) of the Agricultural Trade Act of 1978 (7 U.S.C. 5641(b)(1)(B)). Comments are especially invited on the matter of the guarantee fee level in the SCGP.

(4) *Length of credit period.* SCGP guarantees would be available for credit periods not to exceed 180 days.

(5) *Application.* Although CCC does not intend to routinely conduct independent evaluations of the creditworthiness of individual importers, it proposes to reserve the right to require exporters, in the process of applying for an SCGP guarantee, to provide additional information at the exporter's disposal concerning the importer. It is expected that this requirement, if imposed, would be primarily with respect to previous transactions with importers whose obligations CCC has not previously guaranteed.

(6) *Ineligible exporter.* This provision has been added as paragraph (c) of § 1493.430, Application for payment quarantee. It is intended to prevent a situation in which CCC would receive a claim for a loss from an exporter which directly or indirectly owns or controls, or is owned or controlled, by the importer which is responsible for the default.

D. *Other provisions.*

Aside from the changes outlined above, CCC proposes to operate SCGP in essentially the same fashion as GSM–102, and under identical regulatory provisions (except where conforming changes are required in light of unique SCGP features). Although SCGP and GSM–102 will be used interchangeably as discussed in A above, separate program announcements and notices could be issued by CCC for the two programs.

Among the key features of GSM–102 that will also be applicable to SCGP are:

(a) Information required to be submitted by the exporter to establish eligibility (exporters which have already established eligibility to participate in GSM–102 would automatically be eligible to participate in SCGP) [§ 1493.420];

(b) The requirement that the exporter have a firm export sale before submitting an application to CCC [§ 1493.430(a)];

(c) The requirement that the exporter make a number of certifications, including that the commodity or product to be exported meets the definition of United States agricultural commodity [§ 1493.410(x)];

(d) Ineligibility of certain exports, including those with a date of export prior to the date of the exporter's application to CCC for a payment guarantee [§ 1493.450(f)];

(e) Non-refundability of guarantee fees paid by the exporter [§ 1493.460(d)];

(f) Time limits for the submission of evidence of export reports [§ 1493.480(b)];

(g) The requirement to report to CCC any discounts or allowances provided to the importer [§ 1493.430(a)(11) and § 1493.480(a)(8)], and to certify, both at time of application and submission of evidence of export reports, that no corrupt payments or extra sales and services or other items extraneous to the transaction were provided [§ 1493.440(b) and § 1493.490(d)];

(h) The requirement that the exporter retain documentation of proof of entry of the eligible commodity into the eligible country [§ 1493.500(b)];

(i) The requirement that the exporter and the exporter's assignee pay immediately to CCC any monies for a defaulted payment recovered from any source whatsoever [§ 1493.530(b)]; and

(j) The liability of the exporter to CCC for fraud or any material breach of any contractual obligation, certification, or warranty [§ 1493.530(d)].

List of Subjects in 7 CFR Part 1493

Administrative practice and procedures, Agriculture, Agricultural commodities, Credits, Exports, Guarantees, Reporting and recordkeeping requirements.

PART 1493—[AMENDED]

Accordingly, part 1493 of title 7 is amended by adding and reserving a subpart C and adding subpart D reading as follows:

Subpart D—CCC Supplier Credit Guarantee Program

Sec.

1493.400 General statement.
1493.410 Definition of terms.
1493.420 Information required for program participation.
1493.430 Application for a payment guarantee.
1493.440 Certification requirements for a payment guarantee.
1493.450 Payment guarantee.
1493.460 Guarantee rates and fees.
1493.470 Importer obligation.
1493.480 Evidence of export.
1493.490 Certification requirements for evidence of export.
1493.500 Proof of entry.
1493.510 Notice of default and claims for loss.
1493.520 Payment for loss.
1493.530 Recovery of losses.
1493.540 Miscellaneous provisions.

Authority: 7 U.S.C. 5602, 5622, 5661, 5662, 5663, 5664, 5676; 15 U.S.C. 714b(d), 714c(f).

Subpart D—CCC Supplier Credit Guarantee Program

§ 1493.400 General statement.

(a) *Overview.* (1) This subpart contains the regulations governing the operations of the Supplier Credit Guarantee Program (SCGP). The restrictions and criteria set forth at subpart A for the Commodity Credit Corporation (CCC) Export Credit Guarantee Program (GSM–102) and the Intermediate Credit Guarantee Program (GSM–103) will apply to this subpart. The SCGP was developed to expand U.S. agricultural exports by making available payment guarantees to encourage U.S. exporters to extend financing on credit terms not to exceed 180 days to importers of U.S. agricultural commodities.

(2) The SCGP operates in cases where credit is necessary to increase or maintain U.S. exports to a foreign market and where private U.S. exporters would be unwilling to provide financing without CCC's guarantee. The program is operated in a manner intended not to interfere with markets for cash sales. The program is targeted toward those countries where the guarantees are necessary to secure financing of the exports but which have sufficient financial strength so that foreign exchange will be available for scheduled payments. In providing this credit guarantee facility, CCC seeks to expand market opportunities for U.S. agricultural exporters and assist long-term market development for U.S. agricultural commodities.

(3) The credit facility created by this program is the SCGP payment guarantee (payment guarantee). The payment guarantee is an agreement by CCC to pay the exporter, or the U.S. financial institution that may take assignment of the exporter's right to proceeds, specified amounts of principal and, where applicable, interest due from, but not paid by, the importer incurring the obligation in connection with the export sale to which CCC's guarantee coverage pertains. By approving an exporter's application for a payment guarantee, CCC encourages private sector, rather than government, financing and incurs a substantial portion of the risk of default by the importer. CCC assumes this risk, in order to be able to operate the program for the purposes specified in § 1493.2.

(b) *Credit facility mechanism.* (1) For the purpose of the SCGP, CCC will consider applications for payment guarantees only in connection with export sales of U.S. agricultural commodities where the payment for the agricultural commodities will be made under an unconditional and irrevocable importer obligation to a U.S. exporter payable in U.S. dollars, as further described in § 1493.470.

(2) The exporter may assign the right to proceeds under the importer obligation to a U.S. bank or other financial institution so that the exporter may realize the proceeds of the sale prior to the deferred payment date(s) as set forth in the importer obligation.

(3) The SCGP payment guarantee is designed to protect the exporter or the exporter's assignee against those losses specified in the payment guarantee resulting from defaults, whether for commercial or noncommercial reasons, by the importer under the importer's obligation.

(c) *Program administration.* The SCGP will be administered pursuant to subpart A and this subpart and any Program Announcements and Notices to Participants issued by CCC pursuant to, and not inconsistent with, this subpart. This program is under the general administrative responsibility of the General Sales Manager (GSM), Foreign Agricultural Service (FAS/USDA). The review and payment of claims for loss will be administered by the Office of the Controller, CCC. Information regarding specific points of contact for the public, including names, addresses, and telephone and facsimile numbers of particular USDA or CCC offices, will be announced by a public press release (see § 1493.410(c), ''Contacts P/R'').

(d) *Country allocations and program announcements.* From time to time, CCC will issue a Program Announcement to announce a SCGP allocation for a specific country. The Program Announcement for a country allocation will designate specific allocations for U.S. agricultural commodities or products thereof. Exporters may negotiate export sales to importers in that country for one of the commodities specified in the Program Announcement and seek payment guarantee coverage within the dollar amounts of specified coverage for that commodity. The Program Announcement will contain a requirement that the exporter's sales contract contain a shipping deadline within the applicable program year. The final date for a contractual shipping deadline will be stated in the Program Announcement. Program Announcements may also contain a specified ''undesignated'' or ''unallocated'' dollar amount for the purpose that if dollar amounts specified for a specific commodity for a country become fully used, an additional allocation from the ''unallocated'' or ''undesignated''portion of the total country allocation may then be designated for a specific commodity. Program Announcements that include an ''unallocated'' or ''undesignated'' dollar amount will contain further information on the ''unallocated'' or ''undesignated'' portion of the country allocation.

§ 1493.410 Definition of terms.

Terms set forth in this subpart and in CCC Program Announcements, Notices to Participants, and any other CCC-originated documents pertaining to the SCGP will have the following meanings:

(a) *Assignee.* A financial institution in the United States which, for adequate consideration given, has obtained the legal rights to receive the payment of proceeds under the payment guarantee.

(b) *CCC.* The Commodity Credit Corporation, an agency and instrumentality of the United States within the Department of Agriculture, authorized pursuant to the Commodity Credit Corporation Charter Act of 1948 (15 U.S.C. 714 et seq.), and subject to the general supervision and direction of the Secretary of Agriculture.

(c) *Contacts P/R.* A notice issued by FAS/USDA by public press release which contains specific names, addresses, and telephone and facsimile numbers of contacts within FAS/USDA and CCC for use by persons interested in obtaining information concerning the operations of the SCGP. The Contacts P/R also contains details about where to submit information required to qualify for program participation, to apply for payment guarantees, to request amendments of payment guarantees, to submit evidence of export reports, and to give notices of default and file claims for loss.

(d) *Date of export.* One of the following dates, depending upon the method of shipment: the on-board date of an ocean bill of lading or the on-board ocean carrier date of an intermodal bill of lading; the on-board date of an airway bill; or, if exported by rail or truck, the date of entry shown on an entry certificate or similar document issued and signed by an official of the Government of the importing country.

(e) *Date of sale.* The earliest date on which a contractual obligation exists between the exporter, or an intervening purchaser, if applicable, and the importer under which a firm dollar-and-cent price for the sale of agricultural commodities to the importer has been established or a mechanism to establish such price has been agreed upon.

(f) *Discounts and allowances.* Any consideration provided directly or indirectly, by or on behalf of the exporter, or an intervening purchaser, to the importer in connection with a sale of an agricultural commodity, above and beyond the commodity's value, stated on the appropriate FOB, FAS, CFR or CIF basis. Discounts and allowances include, but are not limited to, the provision of additional goods, services or benefits; the promise to provide additional goods, services or benefits in the future; financial rebates; the assumption of any financial or contractual obligations; the whole or partial release of the importer from any financial or contractual obligations; or settlements made in favor of the importer for quality or weight.

(g) *Eligible interest.* The maximum amount of interest, based on the interest rate indicated in CCC's payment guarantee or any amendments to such payment guarantee, which CCC agrees to pay the exporter or the exporter's assignee in the event that CCC pays a claim for loss. The maximum interest rate stated in the payment guarantee, when determined or adjusted by CCC, will not exceed the average investment rate of the most recent Treasury 52-week bill auction in effect at that time.

(h) *Exported value.* (1) Where CCC announces coverage on a FAS or FOB basis and:

(i) Where the commodity is sold on a FAS or FOB basis, the value, FAS or FOB basis, U.S. point of export, of the export sale, reduced by the value of any discounts or allowances granted to the importer in connection with such sale; or

(ii) Where the commodity was sold on a CFR or CIF basis, point of entry, the value of the export sale, FAS or FOB, point of export, is measured by the CFR or CIF value of the agricultural commodity less the cost of ocean freight, as determined at the time of application and, in the case of CIF sales, less the cost of marine and war risk insurance, as determined at the time of application, reduced by the value of any discounts or allowances granted to the importer in connection with the sale of the commodity; or

(2) Where CCC announces coverage on a CFR or CIF basis, and where the commodity is sold on a CFR or CIF basis, point of entry, the total value of the export sale, CFR or CIF basis, point of entry, reduced by the value of any discounts or allowances granted to the importer in connection with the sale of the commodity.

(3) When a CFR or CIF commodity export sale involves the performance of non-freight services to be performed outside the United States (e.g., services such as bagging bulk cargo) which are not normally included in ocean freight contracts, the value of such services and any related materials not exported from the U.S. with the commodity must also be deducted from the CFR or CIF sales price in determining the exported value.

(i) *Exporter.* A seller of U.S. agricultural commodities or products thereof that has qualified in accordance with the provisions of § 1493.420.

(j) *FAS/USDA.* The Foreign Agricultural Service, U.S. Department of Agriculture.

(k) *GSM.* The General Sales Manager, FAS/USDA, acting in his capacity as Vice President, CCC, or his designee.

(l) *Guaranteed value.* The maximum amount, exclusive of interest, that CCC agrees to pay the exporter or assignee under CCC's payment guarantee, as indicated on the face of the payment guarantee.

(m) *Importer.* A foreign buyer that enters into a contract with an exporter, or with an intervening purchaser, for an export sale of agricultural commodities to be shipped from the U.S. to the foreign buyer.

(n) *Importer obligation.* A promissory note or notes that conforms with the provisions of § 1493.470.

(o) *Incoterms.* The following customary terms, as defined by the International Chamber of Commerce, Incoterms© (current revision):

(1) Free Alongside Ship (FAS);

(2) Free on Board (FOB);

(3) Cost and Freight (CFR, or alternatively, C&F, C and F, or CNF); and

(4) Cost Insurance and Freight (CIF).

(p) *Intervening purchaser.* A party that agrees to purchase U.S. agricultural commodities from an exporter and sell the same agricultural commodities to an importer.

(q) *Late interest.* Interest, in addition to the interest due under the payment guarantee, which CCC agrees to pay in connection with a claim for loss, accruing during the period beginning on the first day after receipt of a claim which CCC has determined to be in good order and ending on the day on which payment is made on such claim for loss.

(r) *Notice to participants.* A notice issued by CCC by public press release which serves one or more of the following functions: to remind participants of the requirements of the program; to clarify the program requirements contained in the regulations in this subpart in a manner which is not inconsistent with the regulations; to instruct exporters to provide additional information in applications for payment guarantees under specific country and/or commodity allocations; and to supplement the provisions of a payment guarantee, in a manner not inconsistent with the regulations in this subpart, before the exporter's application for such payment guarantee is approved.

(s) *Payment guarantee.* An agreement under which CCC, in consideration of a fee paid, and in reliance upon the statements and declarations of the exporter, subject to the terms set forth in the written guarantee, this subpart, and any applicable Program Announcements or Notices to Participants, agrees to pay the exporter or the exporter's assignee in the event of a default by an importer under the importer obligation.

(t) *Port value.* (1) Where CCC announces coverage on a FAS or FOB basis and:

(i) Where the commodity is sold on a FAS or FOB basis, U.S. point of export, the value, FAS or FOB basis, U.S. point of export, of the export sale, including the upward tolerance, if any, as provided by the export sales contract, reduced by the value of any discounts or allowances granted to the importer in connection with such sale; or

(ii) Where the commodity was sold on a CFR or CIF basis, point of entry, the value of the export sale, FAS or FOB, point of export, including the upward tolerance, if any, as provided by the export sales contract, is measured by the CFR or CIF value of the agricultural commodity less the value of ocean freight and, in the case of CIF sales, less the value of marine and war risk insurance, reduced by the value of any discounts or allowances granted to the importer in connection with the sale of the commodity; or

(2) Where CCC announces coverage on a CFR or CIF basis and where the commodity was sold on CFR or CIF basis, point of entry, the total value of the export sale, CFR or CIF basis, point of entry, including the upward tolerance, if any, as provided by the export sales contract, reduced by the value of any discounts or allowances granted to the importer in connection with the sale of the commodity.

(3) When a CFR or CIF commodity export sale involves the performance of non-freight services to be performed outside the United States (e.g., services such as bagging bulk cargo), which are not normally included in ocean freight contracts, the value of such services and any related materials not exported from the U.S. with the commodity must also be deducted from the CFR or CIF sales price in determining the port value.

(u) *Program announcement.* An announcement issued by CCC which provides information on specific country and commodity allocations and may identify eligible agricultural commodities and countries, length of credit periods which may be covered, specify dollar limitations for CCC exposure in particular countries, and include other information and requirements.

(v) *SCGP.* The Supplier Credit Guarantee Program described by this subpart.

(w) *United States or U.S.* All of the 50 states, the District of Columbia, and the territories and possessions of the United States.

(x) *U.S. agricultural commodity.* (1) With respect to any agricultural commodity other than a product of an agricultural commodity, an agricultural commodity entirely produced in the United States; and

(2) With respect to a product of an agricultural commodity:

(i) A product all of the agricultural components of which are entirely produced in the United States; or

(ii) Any other product the Secretary may designate that contains any agricultural component that is not entirely produced in the United States if:

(A) Such component is an added, de minimis component;

(B) Such component is not commercially produced in the United States; and

(C) There is no acceptable substitute for such component that is commercially produced in the United States (For purposes of this paragraph, fish entirely produced in the United States include fish harvested by a documented fishing vessel as defined in title 46, United States Code, in waters that are not waters [including the territorial sea] of a foreign country).

(y) *USDA.* United States Department of Agriculture.

§ 1493.420 Information required for program participation.

Before CCC will accept an application for a payment guarantee under the SCGP, the applicant must qualify for participation in this program. Based upon the information submitted by the applicant and other publicly available sources, CCC will determine whether the applicant is eligible for participation in the program.

(a) *Submission of documentation.* In order to qualify for participation in the SCGP, an applicant must submit to CCC, at the address specified in the Contacts P/R, the following information:

(1) The address of the applicant's headquarters office and the name and address of an agent in the U.S. for the service of process;

(2) The legal form of doing business of the applicant, e.g., sole proprietorship, partnership, corporation, etc.;

(3) The place of incorporation of the applicant, if the applicant is a corporation;

(4) The name and U.S. address of the office(s) of the applicant, and statement indicating whether the applicant is a U.S. domestic corporation, a foreign corporation or another foreign entity. If the applicant has multiple offices, the address included in the information should be that which is pertinent to the particular export sale contemplated by the applicant under this subpart;

(5) A certified statement describing the applicant's participation, if any, during the past three years in U.S. Government programs, contracts or agreements; and

(6) A certification that: ''I certify, to the best of my knowledge and belief, that neither [name of applicant] nor any of its principals has been debarred, suspended, or proposed for debarment from contracting with or participating in programs administered by any U.S. Government agency. [''Principals,'' for the purpose of this certification, means officers; directors; owners of five percent or more of stock; partners; and persons having primary management or supervisory responsibility within a business entity (e.g., general manager, plant manager, head of a subsidiary division, or business segment, and similar positions).] I further agree that, should any such debarment, suspension, or notice of proposed debarment occur in the future, [name of applicant] will immediately notify CCC.''

(b) *Previous qualification.* Any exporter that is qualified under subpart B, § 1493.30 is qualified under this section to submit applications for a SCGP payment guarantee, and the information provided by the exporter pursuant to § 1493.30 will be deemed to also have been provided under this section. Each application must include the statement required by § 1493.430(a)(17) incorporating the certifications of § 1493.440, including the certification in § 1493.440(e) that the information previously provided pursuant to § 1493.420 has not changed. If the exporter is unable to provide such certification, such exporter must update the information required by paragraph (a) of this section which has changed and certify that the remainder of the information previously provided has not changed.

(c) *Additional submissions.* CCC will promptly notify applicants that have submitted information required by this section whether they have qualified to participate in the program. Any applicant failing to qualify will be given an opportunity to provide additional information for consideration by CCC.

(d) *Ineligibility for program participation.* An applicant may be ineligible to participate in the SCGP if:

(1) Such applicant is currently debarred, suspended, or proposed for debarment from contracting with or participating in any program administered by a U.S. Government agency; or

(2) Such applicant is controlled or can be controlled, in whole or in part, by any individuals or entities currently debarred, suspended or proposed for debarment from contracting with or participating in programs administered by any U.S. Government agency.

§ 1493.430 Application for a payment guarantee.

(a) A firm export sale must exist before an exporter may submit an application for a payment guarantee. An application for a payment guarantee may be submitted in writing or may be made by telephone, but, if made by telephone, it must be confirmed in writing to the office specified in the Contacts P/R. An application must identify the name and address of the exporter and include the following information:

(1) Name of the destination country;

(2) Name and address of the importer;

(3) Name and address of the intervening purchaser, if any, and a statement that the commodity will be shipped directly to the importer in the destination country;

(4) Date of sale;

(5) Exporter's sale number;

(6) Delivery period as agreed between the exporter and the importer;

(7) A full description of the commodity (including packaging, if any);

(8) Mean quantity, contract loading tolerance and, if the exporter chooses, a request for CCC to reserve coverage up to the maximum quantity permitted by the contract loading tolerance;

(9) Unit sales price of the commodity, or a mechanism to establish the price, as agreed between the exporter and the importer. If the commodity was sold on the basis of CFR or CIF, the actual (if known at the time of application) or estimated value of freight and, in the case of sales made on a CIF basis, the actual (if known at the time of application) or estimated value of marine and war risk insurance, must be specified;

(10) Description and value of discounts and allowances, if any;

(11) Port value (includes upward loading tolerance, if any);

(12) Guaranteed value;

(13) Guarantee fee;

(14) The term length for the credit being extended and the intervals between principal payments for each shipment to be made under the export sale;

(15) A statement indicating whether any portion of the export sale for which the exporter is applying for a payment guarantee is also being used as the basis for an application for participation in any of the following CCC or USDA export programs: Export Enhancement Program, Dairy Export Incentive Program, Sunflowerseed Oil Assistance Program, or Cottonseed Oil Assistance Program. The number of the Agreement assigned by USDA under one of these programs should be included, as applicable;

(16) Other information as specified in Program Announcements and Notices to Participants, as applicable; and

(17) The exporter's statement, ''ALL SECTION 1493.440 CERTIFICATIONS ARE BEING MADE IN THIS APPLICATION'' which, when included in the application by the exporter, will constitute a certification that it is in compliance with all the requirements set forth in § 1493.440.

(b) An application for a payment guarantee may be approved as submitted, approved with modifications agreed to by the exporter, or rejected by the GSM. In the event that the application is approved, the GSM will cause a payment guarantee to be issued in favor of the exporter. Such payment guarantee will become effective at the time specified in § 1493.450(b). If, based upon a price review, the unit sales price of the commodity does not fall within the prevailing commercial market level ranges, as determined by CCC, the application will not be approved.

(c) *Ineligible exporter.* An exporter will be ineligible to obtain a payment guarantee if such exporter:

(1) Directly or indirectly owns or controls the importer;

(2) Is directly or indirectly owned or controlled by the importer; or

(3) Is directly or indirectly owned or controlled by a person(s) or entity(ies) which also owns or controls the importer.

§ 1493.440 Certification requirements for a payment guarantee.

By providing the statement in § 1493.430(a)(17), the exporter is

certifying that the information provided in the application is true and correct and, further, that all requirements set forth in this section have been or will be met. The exporter will be required to provide further explanation or documentation with regard to applications that do not include this statement. The exporter, in submitting an application for a payment guarantee and providing the statement set forth in § 1493.430(a)(17), certifies that:

(a) The agricultural commodity or product to be exported under the payment guarantee is a United States agricultural commodity or a product thereof, as defined in § 1493.410(x);

(b) There have not been and will not be any corrupt payments or extra sales services or other items extraneous to the transaction provided, financed, or guaranteed in connection with the transaction, and that the transaction complies with applicable United States law;

(c) If the agricultural commodity is vegetable oil or a vegetable oil product, that none of the agricultural commodity or product has been or will be used as a basis for a claim of a refund, as drawback, pursuant to section 313 of the Tariff Act of 1930, 19 U.S.C. 1313, of any duty, tax or fee imposed under Federal law on an imported commodity or product;

(d) No person or selling agency has been employed or retained to solicit or secure the payment guarantee, and that there is no agreement or understanding for a commission, percentage, brokerage, or contingent fee, except in the case of bona fide employees or bona fide established commercial or selling agencies maintained by the exporter for the purpose of securing business; and

(e) The information provided pursuant to § 1493.420 has not changed, the exporter still meets all of the qualification requirements of § 1493.420, and the exporter will immediately notify CCC if there is a change of circumstances which would cause it to fail to meet such requirements. If the exporter breaches or violates these certifications with respect to a SCGP payment guarantee, CCC will have the right, notwithstanding any other rights provided under this subpart, to annul guarantee coverage for any commodities not yet exported and/or to proceed against the exporter.

§ 1493.450 Payment guarantee.

(a) *CCC's obligation.* The payment guarantee will provide that CCC agrees to pay the exporter or the exporter's assignee an amount not to exceed the guaranteed value, plus eligible interest, in the event that the importer fails to pay under the importer obligation. Payment by CCC will be in U.S. dollars.

(b) *Period of guarantee coverage.* The payment guarantee will apply to a credit period not exceeding 180 days beginning either on the date(s) of export(s) or from the date when interest begins to accrue whichever is earlier, and will continue during the credit term specified in the payment guarantee or amendments thereto. However, the payment guarantee becomes effective on the date(s) of export(s) of the agricultural commodities or products thereof specified in the exporter's application for a payment guarantee.

(c) *Terms of the CCC payment guarantee.* The terms of CCC's coverage will be set forth in the payment guarantee, as approved by CCC, and will include the provisions of this subpart, which may be supplemented by any Program Announcements and/or Notices to Participants in effect at the time the payment guarantee is approved by CCC.

(d) *Final date to export.* The final date to export shown on the payment guarantee will be one month, as determined by CCC, after the contractual deadline for shipping.

(e) *Reserve coverage for loading tolerances.* The exporter may apply for a payment guarantee and, if coverage is available, pay the guarantee fee, based at least on, the amount of the lower loading tolerance of the export sales contract; however, the exporter may also request that CCC reserve additional guarantee coverage to accommodate up to the amount of the upward loading tolerance specified in the export sales contract. If such additional guarantee coverage is available at the time of application and CCC determines to make such reservation, it will so indicate to the exporter. In the event that the exporter ships a quantity greater than the amount on which the guarantee fee was paid (i.e., lower loading tolerance), it may obtain the additional coverage from CCC, up to the amount of the upward loading tolerance, by filing for an amendment to the payment guarantee, and by paying the additional amount of fee applicable. If such amendment to the payment guarantee is not filed with CCC by the exporter within 30 days after the date of the last export against the sales contract, CCC may determine not to reserve the coverage originally set aside for the exporter.

(f) *Ineligible exports.* Commodities with a date of export prior to the date of receipt by CCC of the exporter's telephonic or written application for a payment guarantee, or with a date of export made after the final date for export shown on the payment guarantee or any amendments thereof, are ineligible for guarantee coverage under this subpart, except where it is determined by the GSM to be in the best interests of CCC to provide guarantee coverage on such commodities.

(g) *Foreign agricultural component.* CCC may approve payment guarantees under this subpart only in connection with sales of United States agricultural commodities as defined in § 1493.410(x). CCC may not provide guarantee coverage under this subpart on credit extended for the value of any foreign agricultural component.

(h) *Additional requirements.* The payment guarantee may contain such additional terms, conditions, and limitations as deemed necessary or desirable by the GSM. Such additional terms, conditions or qualifications, as stated in the payment guarantee are binding on the exporter or the exporter's assignee.

(i) *Amendments.* A request for an amendment of a payment guarantee may be submitted only by the exporter (with the concurrence of the assignee, if any). CCC will consider such a request only if the amendment sought is consistent with this subpart and any applicable Program Announcements and Notices to Participants. Amendments may include, but will not be limited to, a change in the credit period and an extension of time to export. Any amendment to the payment guarantee, particularly those that result in an increase in CCC's liability under the payment guarantee, may result in an increase in the guarantee fee. (Technical corrections or corrections of a clerical error which may be submitted by the exporter or the exporter's assignee are not viewed as amendments.)

§ 1493.460 Guarantee rates and fees.

(a) *Guarantee fee rates.* The current payment guarantee fee rate(s) will be available by Program Announcement.

(b) *Calculation of fee.* The guarantee fee will be computed by multiplying the guaranteed value by the guarantee fee rate.

(c) *Payment of fee.* The exporter shall remit, with his written application, the full amount of the guarantee fee. Applications will not be approved until the guarantee fee has been received by CCC. The exporter's check for the guarantee fee shall be made payable to CCC and mailed or delivered by courier to the office specified in the Contacts P/R.

(d) *Refunds of fee.* Guarantee fees paid in connection with approved applications will ordinarily not be refundable. CCC's approval of the

application will be final and refund of the guarantee fee will not be made after approval unless the GSM determines that such refund will be in the best interest of CCC. If the application for a payment guarantee is not approved or is approved only for a part of the guarantee coverage requested, a full or pro rata refund of the fee remittance will be made.

§ 1493.470 Importer obligation.

A promissory note(s) must evidence the unconditional obligation of the importer to pay the exporter. All payment terms shall be consistent with the credit terms of the applicable payment guarantee. Each promissory note(s) shall be a fixed rate note or a floating rate note as set forth in paragraphs (a) or (b) of this section. The promissory note(s) must contain the provisions set forth in paragraphs (a) or (b) of this section and may include, without prior written consent of CCC one or more of the provisions set forth in paragraph (d) of this section. No other form of promissory note may be used. Program participants should also note the additional instructions set forth in paragraph (c) of this section.

(a) *Fixed Rate Note.*

Name of Maker

PROMISSORY NOTE

U.S. $————, 199—

FOR VALUE RECEIVED, [*Name and address of Importer*] (''Maker'') by this promissory note (''Note'') hereby unconditionally promises to pay to the order of [*Name and address of exporter*] (''Lender''), or its successor(s) or assign(s), at [*Name and address of U.S. financial institution*] the principal sum of [*amount in words*] U.S. dollars ($————) as hereinafter provided [if interest is payable add: and to pay interest on the principal balance hereof from time to time outstanding, as hereinafter provided at the rate of percent (———%) per annum].

Interest shall be calculated for actual time elasped from (date). Interest shall be based on a (360 or 365 day year). Principal and interest shall be paid as follows:

Date	$ principal due	Interest due, if any

All principal and interest payable under this Note are payable in lawful money of the United States of America in immediately available funds without deduction for or on account of any present or future taxes, duties, or other charges levied or imposed on this Note or the proceeds or holder hereof by the Government of [*Country of Maker*] or any political subdivision or taxing authority thereof.

The Maker hereby waives deiligence, presentment, demand, protest and notice of protest, demand and dishonor, and nonpayment of this Note.

No delay or omission on the part of the holder here in exercising any right hereunder shall operate as a waiver of such right or of any other right under this Note, nor shall any waiver on one occasion be construed as a bar to or waiver of any such right on any future occasion. No waiver shall be effective unless in writing and signed by the holder.

This Note shall be governed by and construed in accordance with the laws of the State of [*Specify a State reasonably related to the transaction*], United States of America.

Name of Maker

By: _____

Name: _____

(Print)

Title: _____

(b) *Floating Rate Note.*

Name of Maker

PROMISSORY NOTE

U.S. $————, 199—

FOR VALUE RECEIVED, [*Name and address of Importer*] (''Maker'') by this promissory note (''Note'') hereby unconditionally promises to pay to the order of [*Name and address of exporter*] (''Lender''), or its successor(s) or assign(s), at [*Name and address of U.S. financial institution*] the principal sum of [*amount in words*] U.S. dollars ($————) in installments as hereinafter provided and to pay interest on the principal balance(s) hereof from time to time outstanding, with interest accruing for actual days elapsed from (date) calculated on the basis of a (360 or 365) day year, at the rate to be determined by (adding) (subtracting)——percent (——— %) per annum (to) (from) the annual rate of interest [*Specify method or source for calculating rate of interest and adjustment procedure*].

Principal and interest shall be paid as follows:1

Principal due date	$ principal due	Interest due date

All principal and interest payable under this Note are payable in lawful money of the United States of America in immediately available funds without deduction for or on account of any present or future taxes, duties, or other charges levied or imposed on this Note or the proceeds or holder hereof by the Government of [*Country of Maker*] or any political subdivision or taxing authority thereof.

The Maker hereby waives diligence, presentment, demand, protest and notice of protest, demand and dishonor, and nonpayment of this Note.

No delay or omission on the part of the holder here in exercising any right hereunder shall operate as a waiver of such right or of any other right under this Note, nor shall any waiver on one occasion be construed as a bar to or waiver of any such right on any furter occasion. No waiver shall be effective unless in writing and signed by the holder.

This Note shall be governed by and construed in accordance with the laws of the State of [*Specify a State reasonably related to the transaction*], United States of America.

Name of Maker

By: _____

Name: _____

(Print)

Title: _____

(c) *Aditional instructions.* When preparing the promissory note, program participants should make certain of the following:

(1) In order to ensure that the payment guarantee will cover any defaults, the lender must ensure that the payment schedule is consistent with the credit terms specified in the payment guarantee. For example, the last payment due must be within the actual terms of the guarantee coverage. The coverage expiration date is based on the date of export as defined in § 1493.401(d) or the date when interest begins to accrue, whichever is earlier (§ 1493.450(b));

(2) Personal makers should sign in their personal capacities only. Corporate makers should sign only in their corporate capacities with proper reference to their corporate titles; and

(3) In a floating rate note the method or source for calculating the annual rate of interest and any applicable adjustment procedure is adequately described. An example of an appropriate description of the source would be: ''the annual rate of interest announced by (specify U. S. commercial bank) as its prime rate, such rate to be adjusted on each date any change announced by that bank becomes effective.''

(d) *Optional provisions.* The following optional provisions may be incorporated into the promissory note:

(1) In the event that any amount of the principal hereof or interest on this Note is not paid when due, the Maker, to the extent permitted by applicable law, shall pay on demand interest on such unpaid amount from the date such amount was due to the date such amount is paid in full at the rate of ——— percent per annum (''late interest''), but in no event to exceed the maximum rate permitted by applicable law;

(2) Each payment hereunder shall be credited first to late interest then due and payable, then to ordinary interest then due and payable, and the

remainder thereof, if any, to the unpaid principal balance of this Note;

(3) The Maker shall have the right, at any time or from time to time, to prepay all or any part of the principal hereof, provided any accured interest on amount prepaid is also paid, and any such prepayment shall be applied to the remaining principal installments in the inverse order of their maturities;

(4) Upon default in the prompt and full payment of any installment of principal or interest on this Note, the entire outstanding principal amount hereof and interest on the Note to the date of payment shall immediately become due and payable at the option and upon the demand of the holder hereof; and/or,

(5) Maker further agrees to pay all reasonable costs of collection, including reasonable attorneys' fees (inclusive of any appellate or bankruptcy proceedings) in case any payment of principal or interest is not paid by the due date thereof, whether suit be brought or not.

§ 1493.480 Evidence of export.

(a) *Report of export.* The exporter is required to provide CCC an evidence of export report for each shipment made under the payment guarantee. This report must include the following:

(1) Payment guarantee number;

(2) Date of export;

(3) Exporter's sale number;

(4) Exported value;

(5) Quantity;

(6) A full description of the commodity exported;

(7) Unit sales price received for the commodity exported and the basis (e.g., FOB, CFR, CIF). Where the unit sales price at export differs from the unit sales price indicated in the exporter's application for a payment guarantee, the exporter is also required to submit a statement explaining the reason for the difference;

(8) Description and value of discounts and allowances, if any;

(9) Number of the Agreement assigned by USDA under any other program if any portion of the export sale was also approved for participation in any of the following CCC or USDA export programs: Export Enhancement Program, Dairy Export Incentive Program, Sunflowerseed Oil Assistance Program, or Cottonseed Oil Assistance Program; and

(10) The exporter's statement, ''ALL SECTION 1493.490 CERTIFICATIONS ARE BEING MADE IN THIS EVIDENCE OF EXPORT'' which, when included in the evidence of export by the exporter, will constitute a certification that it is in compliance with all the requirements set forth in § 1493.490.

(b) *Time limit for submission of evidence of export.* The exporter must provide a written report to the office specified in the Contacts P/R within 60 calendar days if the export was by rail or truck; or 30 calendar days if the export was by any other carrier. The time period for filing a report of export will commence upon each date of export of the commodity covered under a payment guarantee. If the evidence of export report is not received by CCC within the time period for filing, the payment guarantee will become null and void only if and only to the extent that failure to make timely filing resulted, or would be likely to result, in:

(1) Significant financial harm to CCC;

(2) The undermining of an essential regulatory purpose of the program;

(3) Obstruction of the fair administration of the program; or

(4) A threat to the integrity of the program. The time limit for submission of an evidence of export report may be extended if such extension is determined by the GSM to be in the best interests of CCC.

(c) *Export sales reporting.* Exporters may have a mandatory reporting responsibility under Section 602 of the Agricultural Trade Act of 1978 (7 U.S.C. 5712), as amended by Section 1531 of the Food, Agriculture, Conservation, and Trade Act of 1990 for exports of wheat and wheat flour, feed grains, oilseeds, cotton, and other agricultural commodities and products thereof.

§ 1493.490 Certification requirements for evidence of export.

By providing the statement contained in § 1493.480(a)(10), the exporter is certifying that the information provided in the evidence of export report is true and correct and, further, that all requirements set forth in this section have been or will be met. The exporter will be required to provide further explanation or documentation with regard to reports that do not include this statement. If the exporter breaches or violates these certifications with respect to a SCGP payment guarantee, CCC will have the right, notwithstanding any other rights provided under this subpart, to annul guarantee coverage for any commodities not yet exported and/or to proceed against the exporter. The exporter, in submitting the evidence of export and providing the statement set forth in § 1493.480(a)(10), certifies that:

(a) The agricultural commodity or product exported under a payment guarantee is a United States agricultural commodity or product thereof, as defined in § 1493.410(x);

(b) Agricultural commodities of the grade, quality and quantity called for in the exporter's sales contract with the importer have been exported to the country specified in the payment guarantee;

(c) There is an importer obligation as defined in § 1493.410(n) to cover the exported value of the commodity exported;

(d) There have not been and will not be any corrupt payments or extra sales services or other items extraneous to the transaction provided, financed, or guaranteed in connection with the transaction, and that the transaction complies with applicable United States law; and

(e) The information provided pursuant to § 1493.420 has not changed, the exporter still meets all of the qualification requirements of § 1493.420 and the exporter will immediately notify CCC if there is a change of circumstances which would cause it to fail to meet such requirements.

§ 1493.500 Proof of entry.

(a) *Diversion.* The diversion of commodities covered by a payment guarantee to a country other than that shown on the payment guarantee is prohibited, unless expressly authorized by the GSM.

(b) *Records of proof of entry.* Exporters must obtain and maintain records of an official or customary commercial nature and grant authorized USDA officials access to such documents or records as may be necessary to demonstrate the arrival of the agricultural commodities exported in connection with the SCGP in the country that was the intended country of destination of such commodities. Records demonstrating proof of entry must be in English or be accompanied by a certified or other translation acceptable to CCC. Records acceptable to meet this requirement include an original certification of entry signed by a duly authorized customs or port official of the importing country, by the importer, by an agent or representative of the vessel or shipline which delivered the agricultural commodity to the importing country, or by a private surveyor in the importing country, or other documentation deemed acceptable by the GSM showing:

(1) That the agricultural commodity entered the importing country;

(2) The identification of the export carrier;

(3) The quantity of the agricultural commodity;

(4) The kind, type, grade and/or class of the agricultural commodity; and

(5) The date(s) and place(s) of unloading of the agricultural commodity in the importing country. [Records of

proof of entry need not be submitted with a claim for loss, except as may be provided in § 1493.510(b)(4)(ii).]

§ 1493.510 Notice of default and claims for loss.

(a) *Notice of default.* If the importer fails to make payment pursuant to the terms of the importer obligation, the exporter or the exporter's assignee must submit a notice of default to CCC as soon as possible, but not later than 10 calendar days after the date that payment was due from the importer (the due date). A notice of default must be submitted in writing to the Treasurer, CCC, at the address specified in the Contacts P/R. If the exporter or the exporter's assignee fails to promptly notify CCC of defaults in accordance with this paragraph, CCC may make the payment guarantee null and void with respect to any payment(s) applicable to such default. This time limit may be extended only under extraordinary circumstances and if such extension is determined by the Controller, CCC, to be in the best interests of CCC. The notice of default must include:

(1) Payment guarantee number;

(2) Name of the country;

(3) Name of the defaulting importer;

(4) Due date;

(5) Total amount of the defaulted payment due, indicating separately the amounts for principal and interest;

(6) Date of importer's refusal to pay, if applicable; and

(7) Reason for importer's refusal to pay, if known.

(b) *Filing a claim for loss.* A claim for a loss by the exporter or the exporter's assignee will not be paid if it is made later than six months from the due date of the defaulted payment. A claim for loss must be submitted in writing to the Treasurer, CCC, at the address specified in the Contacts P/R. The claim for loss must include the following information and documents:

(1) Payment guarantee number;

(2) A certification that the scheduled payment has not been received;

(3) A certification of the amount of accrued interest in default, the date interest began to accrue, and the interest rate on the importer obligation applicable to the claim;

(4) A copy of each of the following documents, with a cover document containing a signed certification by the exporter or the exporter's assignee that each page of each document is a true and correct copy:

(i) The importer obligation;

(ii) Depending upon the method of shipment, the negotiable ocean carrier or intermodal bill(s) of lading signed by the shipping company with the onboard ocean carrier date for each shipment, the airway bill, or, if shipped by rail or truck, the entry certificate or similar document signed by an official of the importing country;

(iii) (A) The exporter's invoice showing, as applicable, the FAS, FOB, CFR or CIF values; or

(B) If there was an intervening purchaser, both the exporter's invoice to the intervening purchaser and the intervening purchaser's invoice to the importer;

(iv) An instrument, in form and substance satisfactory to CCC, subrogating to CCC the respective rights of the exporter and the exporter's assignee, if applicable, to the amount of payment in default under the applicable export sale. The instrument must reference the applicable importer obligation; and

(v) A copy of the report(s) of export previously submitted by the exporter to CCC pursuant to § 1493.480(a).

(c) *Subsequent claims for defaults on installments.* If the initial claim is found in good order, the exporter or an exporter's assignee need only provide all of the required claims documents with the initial claim relating to a covered transaction. For subsequent claims relating to failure of the importer to make scheduled installments on the same export shipment, the exporter or the exporter's assignee need only submit to CCC a notice of such failure containing the information stated in paragraph (b)(1), (2), and (3) of this section; an instrument of subrogation as per paragraph (b)(4)(iv) of this section, and including the date the original claim was filed with CCC.

§ 1493.520 Payment for loss.

(a) *Determination of CCC's liability.* Upon receipt in good order of the information and documents required under § 1493.510, CCC will determine whether or not a loss has occurred for which CCC is liable under the applicable payment guarantee, this subpart and any applicable supplemental Program Announcements and Notices to Participants. If CCC determines that it is liable to the exporter and/or the exporter's assignee, CCC will pay the exporter or the exporter's assignee in accordance with paragraphs (b) and (c) of this section.

(b) *Amount of CCC's liability.* CCC's maximum liability for any claims for loss submitted with respect to any payment guarantee, not including any late interest payments due in accordance with paragraph (c) of this section, will be limited to the lesser of:

(1) The guaranteed value as stated in the payment guarantee, plus eligible interest; or

(2) The guaranteed percentage (as indicated in the payment guarantee) of the exported value indicated in the evidence of export, plus eligible interest.

(c) *Late interest payment.* If a claim is not paid within one day of receipt of a claim which CCC has determined to be in good order, late interest will accrue in favor of the exporter or the exporter's assignee beginning with the first day after the day of receipt of a claim found by CCC to be in good order and continuing until and including the date that payment is made by CCC. Late interest will be paid on the guaranteed amount, as determined by paragraphs (b)(1) and (2) of this section, and will be calculated based on the average investment rate of the most recent Treasury 91-day bill auction as announced by the Department of Treasury as of the due date.

(d) *Accelerated payments.* CCC will pay claims only for losses on amounts not paid as scheduled. CCC will not pay claims for amounts due under an accelerated payment clause in the export sales contract or the importer obligation unless it is determined to be in the best interests of CCC by the Controller, CCC. Notwithstanding the foregoing, CCC at its option may declare the entire amount of the unpaid balance, plus accrued interest, in default and make payment to the exporter or the exporter's assignee in addition to such other claimed amount as may be due from CCC.

(e) *Action against the assignee.* Notwithstanding any other provision in this subpart to the contrary, with regard to commodities covered by a payment guarantee, CCC will not hold the assignee responsible or take any action or raise any defense against the assignee for any action, omission, or statement by the exporter of which the assignee has no knowledge, provided that:

(1) The exporter complies with the reporting requirements under § 1493.480 and § 1493.490, excluding post-export adjustments (i.e., corrections to evidence of export reports); and

(2) The exporter or the exporter's assignee furnishes the statements and documents specified in § 1493.510.

§ 1493.530 Recovery of losses.

(a) *Notification.* Upon payment of loss to the exporter or the exporter's assignee, CCC will notify the importer of CCC's rights under the subrogation agreement to recover all moneys in default.

(b) *Receipt of monies.* (1) In the event that monies for a defaulted payment are recovered by the exporter or the exporter's assignee from the importer or any other source whatsoever, such monies shall be immediately paid to the Treasurer, CCC. If such monies are not received by CCC within 15 business days from the date of recovery by the exporter or the exporter's assignee, the exporter or the exporter's assignee will owe to CCC interest from the date of recovery to the date of receipt by CCC. This interest will be calculated based on the latest average investment rate of the most recent Treasury 91-day bill auction, as announced by the Department of Treasury, in effect on the date of recovery and will accrue from such date to the date of payment by the exporter or the exporter's assignee to CCC. Such interest will be charged only on CCC's share of the recovery.

(2) If CCC recovers monies that should be applied to a payment guarantee for which a claim has been paid by CCC, CCC will pay the holder of the payment guarantee its pro rata share immediately, provided that the required information necessary for determining pro rata distribution has been furnished. If payment is not made by CCC within 15 business days from the date of recovery or 15 business days from receiving the required information for determining pro rata distribution, whichever is later, CCC will pay interest calculated on the latest average investment rate of the most recent Treasury 91-day bill auction, as announced by the Department of Treasury, in effect on the date of recovery and such interest will accrue from such date to the date of payment by CCC. The interest will apply only to the portion of the recovery payable to the holder of the payment guarantee.

(c) *Allocation of recoveries.* Recoveries made by CCC from the importer, and recoveries received by CCC from the exporter, the exporter's assignee, or any other source whatsoever, will be allocated by CCC to the exporter or the exporter's assignee and to CCC on a pro rata basis determined by their respective interests in such recoveries. The respective interest of each party will be determined on a pro rata basis, based on the combined amount of principal and interest in default. Once CCC has paid out a particular claim under a payment guarantee, CCC pro rates any collections it receives and shares these collections proportionately with the holder of the guarantee until both CCC and the holder of the guarantee have been reimbursed in full. Appendix A to § 1493.530, Illustration of Pro Rata Allocation of Recoveries, provides an example of the methodology used by CCC in applying this paragraph (c).

(d) *Liabilities to CCC.* Notwithstanding any other terms of the payment guarantee, the exporter may be liable to CCC for any amounts paid by CCC under the payment guarantee when and if it is determined by CCC that the exporter has engaged in fraud, or has been or is in material breach of any contractual obligation, certification or warranty made by the exporter for the purpose of obtaining the payment guarantee or for fulfilling obligations under SCGP. Further, the exporter's assignee may be liable to CCC for any amounts paid by CCC under the payment guarantee when and if it is determined by CCC that the exporter's assignee has engaged in fraud or otherwise violated program requirements.

(e) *Good faith.* The violation by an exporter of the certifications in § 1493.440(b) and § 1493.490(d) or the failure of an exporter to comply with the provisions of § 1493.500 or § 1493.540(e) will not affect the validity of any payment guarantee with respect to an assignee which had no knowledge of such violation or failure to comply at the time such exporter applied for the payment guarantee or at the time of assignment of the payment guarantee.

(f) *Cooperation in recoveries.* Upon payment by CCC of a claim to the exporter or the exporter's assignee, the exporter or the exporter's assignee will cooperate with CCC to effect recoveries from the importer.

Appendix A to § 1493.530—Illustration of Pro Rata Allocation of Recoveries

The following example illustrates CCC's policy, as set forth in § 1493.530(c), regarding pro rata sharing of recoveries made for claims filed under the SCGP. A typical case might be as follows:

1. The U.S. exporter enters into a $200,000, 180-day credit arrangement with the importer calling for two equal payments of principal and two equal payments of interest at a rate of 10 percent per annum and a penalty interest rate of 12 percent per annum (basis 360 days) on overdue amounts until the overdue amount is paid. (Basis for interest calculation may be 360 or 365 days.)

2. The importer fails to make the final principal payment of $100,000 and an interest payment of $2,500.00, (10% per annum for 90 days on $100,000, basis 360 days), both due on January 31.

3. On February 10, the U.S. exporter files a claim in good order with CCC.

4. CCC's guarantee states that CCC's maximum liability is limited to 60 percent of the principal amount due ($60,000) and interest at a rate of 8 percent per annum (basis 365 days) on 60 percent of the principal outstanding ($1,183.56) (8% per annum for 90 days on $60,000). (CCC's basis for interest calculation is 365 days.)

5. CCC pays the claim on February 22.

6. The average investment rate of the most recent 91-day Treasury Bill auction average which has been published by the Department of Treasury in effect on the date of nonpayment by CCC (January 31) is 7 percent. (CCC's late interest rate.)

Computation of Obligations

Using the above case, CCC's payment to the holder of the payment guarantee would be computed as follows:

1. CCC's Obligation under the Payment Guarantee:

(a)	Principal coverage—(60% $100,000).	$60,000.00
(b)	Interest coverage—(8% per annum for 90 days on $60,000, basis 365 days).	$1,183.56
		$61,183.56
(c)	Late interest due from CCC (7% per annum for 11 days on $61,183.56, basis 365 days).	$129.07
(d)	Amount paid by CCC on February 22.	$61,312.63

2. Importer's obligation under the importer obligation:

(a)	Principal due January 31	$100,000.00
	Interest due January 31 (10% per annum for 90 days on $100,000, basis 360 days).	$ 2,500.00
	Amount owed by importer as of January 31.	$102,500.00
(b)	Penalty interest due (12% per annum for 22 days on $102,500.00, basis 360 days).	$751.67
(c)	Amount owed by importer as of February 22.	$103,251.67

3. Amount of importer's obligation not covered by CCC's payment guarantee: $41,939.04 ($103,251.67 - $61,312.63).

Computation of Pro Rata Sharing in Recovery of Losses

In establishing each party's respective interest in any recovery of losses, the total amount due under the importer obligation would be determined as of the date the claim is paid by CCC (February 22). Using the above example in which the amount owed by the importer is $103,251.67, CCC would be entitled to 59.38 percent ($61,312.63 divided by $103,251.67) and the holder of the payment guarantee would be entitled to 40.62 percent ($41,939.04 divided by

$103,251.67) of any recoveries of losses after settlement of the claim. Since in this example, the losses were recovered after the claim has been paid by CCC, § 1493.530(b) would apply.

§ 1493.540 Miscellaneous provisions.

(a) *Assignment.* (1) The exporter may assign the proceeds which are, or may become, payable by CCC under a payment guarantee or the right to such proceeds only to a financial institution in the U.S. The assignment must cover all amounts payable under the payment guarantee not already paid, may not be made to more than one party, and may not, unless approved in advance by CCC, be:

(i) Made to one party acting for two or more parties; or

(ii) Subject to further assignment.

(2) An original and two copies of the written notice of assignment signed by the parties thereto must be filed by the assignee with the Treasurer, CCC, at the address specified in the Contacts P/R.

(3) Receipt of the notice of assignment will ordinarily be acknowledged to the exporter and its assignee in writing by an officer of CCC. In cases where a financial institution is determined to be ineligible to receive an assignment, in accordance with paragraph (b) of this section, CCC will provide notice thereof, to the financial institution and to the exporter issued the payment guarantee, in lieu of an acknowledgment of assignment.

(4) The name and address of the assignee must be included on the written notice of assignment.

(b) *Ineligibility of financial institutions to receive an assignment.* A financial institution will be ineligible to receive an assignment of proceeds which may become payable under a payment guarantee if, at the time of assignment, such financial institution:

(1) Is not in sound financial condition, as determined by the Treasurer of CCC;

(2) Owns or controls the entity issuing the importer obligation; or

(3) Is owned or controlled by an entity that owns or controls the entity issuing the importer obligation.

(c) *Ineligibility of financial institutions to receive proceeds.* A financial institution will be ineligible to receive proceeds payable under a payment guarantee approved by CCC if such financial institution:

(1) At the time of assignment of a payment guarantee, is not in sound financial condition, as determined by the Treasurer of CCC;

(2) Owns or controls the entity issuing the importer obligation; or

(3) Is owned or controlled by an entity that owns or controls the entity issuing the importer obligation.

(d) *Alternative satisfaction of payment guarantees.* CCC may, with the agreement of the exporter (or if the right to proceeds payable under the payment guarantee has been assigned, with the agreement of the exporter's assignee), establish procedures, terms and/or conditions for the satisfaction of CCC's obligations under a payment guarantee other than those provided for in this subpart if CCC determines that those alternative procedures, terms, and/or conditions are appropriate in rescheduling the debts arising out of any transaction covered by the payment guarantee and would not result in CCC paying more than the amount of CCC's obligation.

(e) *Maintenance of records and access to premises.* (1) For a period of five years after the date of expiration of the coverage of a payment guarantee, the exporter or the exporter's assignee, as applicable, must maintain and make available all records pertaining to sales and deliveries of and extension of credit for agricultural commodities exported in connection with a payment guarantee, including those records generated and maintained by agents, intervening purchasers, and related companies involved in special arrangements with the exporter. The Secretary of Agriculture and the Comptroller General of the United States, through their authorized representatives, must be given full and complete access to the premises of the exporter or the exporter's assignee, as applicable, during regular business hours from the effective date of the payment guarantee until the expiration of such five-year period to inspect, examine, audit, and make copies of the exporter's, exporter's assignee's, agent's, intervening purchaser's, or related company's books, records and accounts concerning transactions relating to the payment guarantee, including, but not limited to, financial records and accounts pertaining to sales, inventory, processing, and administrative and incidental costs, both normal and unforeseen. During such period, the exporter or the exporter's assignee may be required to make available to the Secretary of Agriculture or the Comptroller General of the United States, through their authorized representatives, records that pertain to transactions conducted outside the program, if, in the opinion of the GSM, such records would pertain directly to the review of transactions undertaken by the exporter in connection with the payment guarantee.

(2) The exporter must maintain the proof of entry required by § 1493.500(b), and must provide access to such documentation if requested by the Secretary of Agriculture or his authorized representative for the five-year period specified in paragraph (e)(1) of this section.

(f) *Responsibility of program participants.* It is the responsibility of all program participants to review, and fully acquaint themselves with, all regulations, Program Announcements, and Notices to Participants issued pursuant to this subpart. Applicants for payment guarantees are hereby on notice that they will be bound by any terms contained in applicable Program Announcements or Notices to Participants issued prior to the date of approval of a payment guarantee.

(g) *Submission of documents by principal officers.* All required submissions, including certifications, applications, reports, or requests (i.e., requests for amendments), by exporters or exporters' assignees under this subpart must be signed by a principal or officer of the exporter or exporter's assignee or their authorized designee(s). In cases where the designee is acting on behalf of the principal or the officer, the signature must be accompanied by: wording indicating the delegation of authority or, in the alternative, by a certified copy of the delegation of authority; and the name and title of the authorized person or officer. Further, the exporter or exporter's assignee must ensure that all information/reports required under the regulations in this subpart are submitted within the required time limits. If requested in writing, CCC will acknowledge receipt of a submission by the exporter or the exporter's assignee. If acknowledgment of receipt is requested, the exporter or exporter's assignee must submit an extra copy of each document and a stamped self-addressed envelope for return by U.S. mail. If courier services are desired for the return receipt, the exporter or exporter's assignee must also submit a self-addressed courier service order which includes the recipient's billing code for such service.

(h) *Officials not to benefit.* No member of or delegate to Congress, or Resident Commissioner, shall be admitted to any share or part of the payment guarantee or to any benefit that may arise therefrom, but this provision shall not be construed to extend to the payment guarantee if made with a corporation for its general benefit.

(i) *OMB control number assigned pursuant to the Paperwork Reduction Act.* The information collection requirements contained in this part (7

CFR Part 1493) have been submitted to the Office of Management and Budget (OMB) for review under the Paperwork Rduction Act of 1980.

Signed this 19th day of May, 1995 at Washington, DC.

Christopher E. Goldthwait,

General Sales Manager and Vice President, Commodity Credit Corporation.

[FR Doc. 95–17626 Filed 7–18–95; 8:45 am]

BILLING CODE 3410–10–F

DEPARTMENT OF TRANSPORTATION

Federal Aviation Administration

14 CFR Part 39

[Docket No. 95–CE–17–AD]

Airworthiness Directives; Fairchild Aircraft SA226 and SA227 Series Airplanes

AGENCY: Federal Aviation Administration, DOT.

ACTION: Notice of proposed rulemaking (NPRM).

SUMMARY: This document proposes to adopt a new airworthiness directive (AD) that would apply to Fairchild Aircraft SA226 and SA227 series airplanes. The proposed action would require replacing the nuts that attach the power control cable to the lever attach point clevis with nuts that have safety wire holes, and safety wiring the power control cable to the lever attach point clevis; and inspecting to assure that the power cable is securely attached to the power control cable bracket, and correcting any attachment problems. Reports of power control cable attaching hardware failure on two of the affected airplanes prompted the proposed action. In one of these instances, the power control cable disconnected from the lever attach point clevis, resulting in engine shutdown. The actions specified by the proposed AD are intended to prevent such power control cable disconnection, which, if not detected and corrected, could result in engine shutdown and subsequent loss of control of the airplane.

DATES: Comments must be received on or before September 15, 1995.

ADDRESSES: Submit comments in triplicate to the Federal Aviation Administration (FAA), Central Region, Office of the Assistant Chief Counsel, Attention: Rules Docket No. 95–CE–17–AD, Room 1558, 601 E. 12th Street, Kansas City, Missouri 64106. Comments may be inspected at this location between 8 a.m. and 4 p.m., Monday through Friday, holidays excepted.

Service information that applies to the proposed AD may be obtained from Fairchild Aircraft, P.O. Box 790490, San Antonio, Texas 78279–0490; telephone (210) 824–9421; facsimile (210) 820–8609. This information may also be examined at the FAA, Room 1558, 601 E. 12th Street, Kansas City, Missouri 64106.

FOR FURTHER INFORMATION CONTACT: Alma Ramirez-Hodge, Aerospace Engineer, FAA, Airplane Certification Office, 2601 Meacham Boulevard, Fort Worth, Texas 76193–0150; telephone (817) 222–5147; facsimile (817) 222–5959.

SUPPLEMENTARY INFORMATION:

Comments Invited

Interested persons are invited to participate in the making of the proposed rule by submitting such written data, views, or arguments as they may desire. Communications should identify the Rules Docket number and be submitted in triplicate to the address specified above. All communications received on or before the closing date for comments, specified above, will be considered before taking action on the proposed rule. The proposals contained in this notice may be changed in light of the comments received.

Comments are specifically invited on the overall regulatory, economic, environmental, and energy aspects of the proposed rule. All comments submitted will be available, both before and after the closing date for comments, in the Rules Docket for examination by interested persons. A report that summarizes each FAA-public contact concerned with the substance of this proposal will be filed in the Rules Docket.

Commenters wishing the FAA to acknowledge receipt of their comments submitted in response to this notice must submit a self-addressed, stamped postcard on which the following statement is made: ''Comments to Docket No. 95–CE–17–AD.'' The postcard will be date stamped and returned to the commenter.

Availability of NPRMs

Any person may obtain a copy of this NPRM by submitting a request to the FAA, Central Region, Office of the Assistant Chief Counsel, Attention: Rules Docket No. 95–CE–17–AD, Room 1558, 601 E. 12th Street, Kansas City, Missouri 64106.

Discussion

The FAA has received reports of power control cable attaching hardware failure on two Fairchild Aircraft SA226 and SA227 series airplanes. In one of these incidents, the jam nut came loose and the threaded portion of the ball joint backed completely out of the clevis. This caused the power lever to disconnect from the clevis, which caused one of the engines to shut down.

Fairchild Aircraft has issued Service Bulletin (SB) 226–76–009; SB 227–76–004; and SB CC7–76–001, all Issued: January 6, 1995. These service bulletins specify procedures for accomplishing the following on Fairchild Aircraft SA226 and SA227 series airplanes:

- Replacing the nuts that attach the power control cable to the lever attach point clevis with nuts that have safety wire holes, and safety wiring the power control cable to the lever attach point clevis; and
- Inspecting to assure that the power cable is securely attached to the power control cable bracket, and correcting any attachment problems.

After examining the circumstances and reviewing all available information related to the incidents described above, the FAA has determined that AD action should be taken to prevent the power control cable from disconnecting from the lever attach point clevis, which, if not detected and corrected, could result in engine shutdown and subsequent loss of control of the airplane.

Since an unsafe condition has been identified that is likely to exist or develop in other Fairchild Aircraft SA226 and SA227 series airplanes of the same type design, the proposed AD would require replacing the nuts that attach the power control cable to the lever attach point clevis with nuts that have safety wire holes, and safety wiring the power control cable to the lever attach point clevis; and inspecting to assure that the power cable is securely attached to the power control cable bracket, and correcting any attachment problems. Accomplishment of the proposed actions would be in accordance with the previously referenced service bulletins, as applicable.

The FAA estimates that 779 airplanes in the U.S. registry would be affected by the proposed AD, that it would take approximately 4 workhours per airplane to accomplish the proposed action, and that the average labor rate is approximately $60 an hour. Parts would consist of common hardware and the cost would vary; however, for the purposes of this AD, a figure of $20 is used. Based on these figures, the total cost impact of the proposed AD on U.S. operators is estimated to be $202,540. This figure is based on the assumption that no owner/operator of the affected

airplanes has accomplished the proposed actions. Since parts are obtained locally, the FAA has no readily available means of determining how many owners/operators have incorporated the proposed actions.

The regulations proposed herein would not have substantial direct effects on the States, on the relationship between the national government and the States, or on the distribution of power and responsibilities among the various levels of government. Therefore, in accordance with Executive Order 12612, it is determined that this proposal would not have sufficient federalism implications to warrant the preparation of a Federalism Assessment.

For the reasons discussed above, I certify that this action (1) is not a ''significant regulatory action'' under Executive Order 12866; (2) is not a ''significant rule'' under DOT Regulatory Policies and Procedures (44 FR 11034, February 26, 1979); and (3) if promulgated, will not have a significant economic impact, positive or negative, on a substantial number of small entities under the criteria of the Regulatory Flexibility Act. A copy of the draft regulatory evaluation prepared for this action has been placed in the Rules Docket. A copy of it may be obtained by contacting the Rules Docket at the location provided under the caption **ADDRESSES**.

List of Subjects in 14 CFR Part 39

Air transportation, Aircraft, Aviation safety, Safety.

The Proposed Amendment

Accordingly, pursuant to the authority delegated to me by the Administrator, the Federal Aviation Administration proposes to amend part 39 of the Federal Aviation Regulations (14 CFR part 39) as follows:

PART 39—AIRWORTHINESS DIRECTIVES

1. The authority citation for part 39 continues to read as follows:

Authority: 49 U.S.C. App. 1354(a), 1421 and 1423; 49 U.S.C. 106(g); and 14 CFR 11.89.

§ 39.13 [Amended]

2. Section 39.13 is amended by adding a new AD to read as follows:

Fairchild Aircraft: Docket No. 95–CE–17–AD.

Applicability: Models SA226–T, SA226–T(B), SA226–AT, SA226–TC, SA227–TT, SA227–AT, SA227–AC, SA227–BC, SA227–CC, and SA227–DC airplanes, all serial numbers, certificated in any category.

Note 1: This AD applies to each airplane identified in the preceding applicability provision, regardless of whether it has been modified, altered, or repaired in the area subject to the requirements of this AD. For airplanes that have been modified, altered, or repaired so that the performance of the requirements of this AD is affected, the owner/operator must use the authority provided in paragraph (c) of this AD to request approval from the FAA. This approval may address either no action, if the current configuration eliminates the unsafe condition, or different actions necessary to address the unsafe condition described in this AD. Such a request should include an assessment of the effect of the changed configuration on the unsafe condition addressed by this AD. In no case does the presence of any modification, alteration, or repair remove any airplane from the applicability of this AD.

Compliance: Required within the next 100 hours time-in-service after the effective date of this AD, unless already accomplished.

To prevent the power control cable from disconnecting from the lever attach point clevis, which, if not detected and corrected, could result in engine shutdown and subsequent loss of control of the airplane, accomplish the following:

(a) Replace the nuts that attach the power control cable to the lever attach point clevis with nuts that have safety wire holes, and safety wire the power control cable to the lever attach clevis; and inspect to assure that the power cable is securely attached to the power control cable bracket, and correct any attachment problems. Accomplish these actions in accordance with the following service bulletins, as applicable:

(1) Fairchild Service Bulletin (SB) 226–76–009, dated January 6, 1995;

(2) Fairchild SB 227–76–004, dated January 6, 1995; or

(3) Fairchild SB CC7–76–001, dated January 6, 1995.

(b) Special flight permits may be issued in accordance with sections 21.197 and 21.199 of the Federal Aviation Regulations (14 CFR 21.197 and 21.199) to operate the airplane to a location where the requirements of this AD can be accomplished.

(c) An alternative method of compliance or adjustment of the compliance times that provides an equivalent level of safety may be approved by the Manager, Fort Worth ACO, FAA, 2601 Meacham Boulevard, Fort Worth, Texas 76137–0150. The request shall be forwarded through an appropriate FAA Maintenance Inspector, who may add comments and then send it to the Manager, Fort Worth ACO.

Note 2: Information concerning the existence of approved alternative methods of compliance with this AD, if any, may be obtained from the Fort Worth ACO.

(d) All persons affected by this directive may obtain copies of the documents referred to herein upon request to Fairchild Aircraft, P.O. Box 790490, San Antonio, Texas 78279–0490; or may examine these documents at the FAA, Central Region, Office of the Assistant Chief Counsel, Room 1558, 601 E. 12th Street, Kansas City, Missouri 64106.

Issued in Kansas City, Missouri, on July 13, 1995.

John R. Colomy,

Acting Manager, Small Airplane Directorate, Aircraft Certification Service.

[FR Doc. 95–17749 Filed 7–18–95; 8:45 am]

BILLING CODE 4910–13–U

---

14 CFR Part 39

[Docket No. 94–NM–249–AD]

Airworthiness Directives; Fokker Model F28 Mark 0100 Series Airplanes

AGENCY: Federal Aviation Administration, DOT.

ACTION: Notice of proposed rulemaking (NPRM).

SUMMARY: This document proposes the adoption of a new airworthiness directive (AD) that is applicable to certain Fokker Model F28 Mark 0100 series airplanes. For certain airplanes, this proposal would require an inspection to determine the torque value of the attaching parts of the interlock mechanism of the large cargo doors, and adjustment of the torque values that are outside certain limits. For certain other airplanes, the proposed AD would require removal of a spring from the interlock mechanism of the large cargo doors, and installation of a new microswitch bracket and two new springs in the interlock mechanism. This proposal is prompted by a report indicating that a spring on the interlock lever of the large cargo doors may become disconnected or the lever may become jammed in the ''activated'' state. The actions specified by the proposed AD are intended to prevent the spring from becoming disconnected or the lever from jamming. If other failures occur, the flightcrew could dispatch the airplane with improperly locked cargo doors; this condition could result in the opening and/or separation of the cargo doors while the airplane is in flight and subsequent rapid decompression and/or structural damage to the airplane.

DATES: Comments must be received by August 28, 1995.

ADDRESSES: Submit comments in triplicate to the Federal Aviation Administration (FAA), Transport Airplane Directorate, ANM–103, Attention: Rules Docket No. 94–NM–249–AD, 1601 Lind Avenue, SW., Renton, Washington 98055–4056. Comments may be inspected at this location between 9:00 a.m. and 3:00 p.m., Monday through Friday, except Federal holidays.

The service information referenced in the proposed rule may be obtained from

Fokker Aircraft USA, Inc., 1199 North Fairfax Street, Alexandria, Virginia 22314. This information may be examined at the FAA, Transport Airplane Directorate, 1601 Lind Avenue, SW., Renton, Washington.

FOR FURTHER INFORMATION CONTACT: Tim Dulin, Aerospace Engineer, Standardization Branch, ANM–113, FAA, Transport Airplane Directorate, 1601 Lind Avenue, SW., Renton, Washington 98055–4056; telephone (206) 227–2141; fax (206) 227–1320.

SUPPLEMENTARY INFORMATION:

Comments Invited

Interested persons are invited to participate in the making of the proposed rule by submitting such written data, views, or arguments as they may desire. Communications shall identify the Rules Docket number and be submitted in triplicate to the address specified above. All communications received on or before the closing date for comments, specified above, will be considered before taking action on the proposed rule. The proposals contained in this notice may be changed in light of the comments received.

Comments are specifically invited on the overall regulatory, economic, environmental, and energy aspects of the proposed rule. All comments submitted will be available, both before and after the closing date for comments, in the Rules Docket for examination by interested persons. A report summarizing each FAA-public contact concerned with the substance of this proposal will be filed in the Rules Docket.

Commenters wishing the FAA to acknowledge receipt of their comments submitted in response to this notice must submit a self-addressed, stamped postcard on which the following statement is made: ''Comments to Docket Number 94–NM–249–AD.'' The postcard will be date stamped and returned to the commenter.

Availability of NPRMs

Any person may obtain a copy of this NPRM by submitting a request to the FAA, Transport Airplane Directorate, ANM–103, Attention: Rules Docket No. 94–NM–249–AD, 1601 Lind Avenue, SW., Renton, Washington 98055–4056.

Discussion

The Rijksluchtvaartdienst (RLD), which is the airworthiness authority for the Netherlands, recently notified the FAA that an unsafe condition may exist on certain Fokker Model F28 Mark 0100 series airplanes. The RLD advises that a spring on the interlock lever of the large cargo doors on these airplanes may become disconnected and/or the lever itself may become jammed in the ''activated'' state on these airplanes. If more failures occur when either of these situations exist, the flightcrew will not receive a warning and could dispatch the airplane with improperly locked cargo doors. This condition, if not corrected, could result in the opening and/or separation of the cargo doors while the airplane is in flight and subsequent rapid decompression and/or structural damage to the airplane.

Fokker has issued Service Bulletin SBF100–52–045, dated August 25, 1993. For certain airplanes, the service bulletin describes procedures for a one-time inspection to determine the torque value of the attaching parts of the interlock mechanism of the large cargo doors, and adjustment of the torque values that are outside certain limits. For certain other airplanes, the service bulletin describes procedures for removing the spring from the interlock mechanism, and installing a new microswitch bracket and two new springs in the interlock mechanism. The RLD classified this service bulletin as mandatory and issued Dutch airworthiness directive BLA 93–124 (A), dated September 17, 1993, in order to assure the continued airworthiness of these airplanes in the Netherlands.

This airplane model is manufactured in the Netherlands and is type certificated for operation in the United States under the provisions of section 21.29 of the Federal Aviation Regulations (14 CFR 21.29) and the applicable bilateral airworthiness agreement. Pursuant to this bilateral airworthiness agreement, the RLD has kept the FAA informed of the situation described above. The FAA has examined the findings of the RLD, reviewed all available information, and determined that AD action is necessary for products of this type design that are certificated for operation in the United States.

Since an unsafe condition has been identified that is likely to exist or develop on other airplanes of the same type design registered in the United States, for certain airplanes, the proposed AD would require an inspection to determine the torque value of the attaching parts of the interlock mechanism of the large cargo doors, and adjustment of the torque values that are outside certain limits. For certain other airplanes, the proposed AD would require removal of the spring from the interlock mechanism, and installation of a new microswitch bracket and new springs in the interlock mechanism. The actions would be required to be accomplished in accordance with the service bulletin described previously.

As a result of recent communications with the Air Transport Association (ATA) of America, the FAA has learned that, in general, some operators may misunderstand the legal effect of AD's on airplanes that are identified in the applicability provision of the AD, but that have been altered or repaired in the area addressed by the AD. The FAA points out that all airplanes identified in the applicability provision of an AD are legally subject to the AD. If an airplane has been altered or repaired in the affected area in such a way as to affect compliance with the AD, the owner or operator is required to obtain FAA approval for an alternative method of compliance with the AD, in accordance with the paragraph of each AD that provides for such approvals. A note has been included in this notice to clarify this long-standing requirement.

The FAA estimates that 61 airplanes of U.S. registry would be affected by this proposed AD.

For 7 of these airplanes, it would take approximately 6 work hours per airplane to accomplish the proposed inspection, at an average labor rate of $60 per work hour. Based on these figures, the total cost impact of the inspection proposed by this AD on U.S. operators of these airplanes is estimated to be $2,520, or $360 per airplane.

For the other 54 airplanes, it would take approximately 12 work hours per airplane to accomplish the proposed removal and installation, at an average labor rate of $60 per work hour. Required parts would cost approximately $1,200 per airplane. Based on these figures, the total cost impact of the removal and installation proposed by this AD on U.S. operators of these airplanes is estimated to be $103,680, or $1,920 per airplane.

The total cost impact figured discussed above are based on assumptions that no operator has yet accomplished any of the proposed requirements of this AD action, and that no operator would accomplish those actions in the future if this AD were not adopted.

The regulations proposed herein would not have substantial direct effects on the States, on the relationship between the national government and the States, or on the distribution of power and responsibilities among the various levels of government. Therefore, in accordance with Executive Order 12612, it is determined that this proposal would not have sufficient federalism implications to warrant the preparation of a Federalism Assessment.

For the reasons discussed above, I certify that this proposed regulation (1) is not a ''significant regulatory action'' under Executive Order 12866; (2) is not a ''significant rule'' under the DOT Regulatory Policies and Procedures (44 FR 11034, February 26, 1979); and (3) if promulgated, will not have a significant economic impact, positive or negative, on a substantial number of small entities under the criteria of the Regulatory Flexibility Act. A copy of the draft regulatory evaluation prepared for this action is contained in the Rules Docket. A copy of it may be obtained by contacting the Rules Docket at the location provided under the caption **ADDRESSES.**

List of Subjects in 14 CFR Part 39

Air transportation, Aircraft, Aviation safety, Safety.

The Proposed Amendment

Accordingly, pursuant to the authority delegated to me by the Administrator, the Federal Aviation Administration proposes to amend part 39 of the Federal Aviation Regulations (14 CFR part 39) as follows:

PART 39—AIRWORTHINESS DIRECTIVES

1. The authority citation for part 39 continues to read as follows:

Authority: 49 U.S.C. App. 1354(a), 1421 and 1423; 49 U.S.C. 106(g); and 14 CFR 11.89.

§ 39.13 [Amended]

2. Section 39.13 is amended by adding the following new airworthiness directive:

Fokker: Docket 94–NM–249–AD.

Applicability: Model F28 Mark 0100 series airplanes; as listed in Fokker Service Bulletin SBF100–52–045, dated August 25, 1993; certificated in any category.

Note 1: This AD applies to each airplane identified in the preceding applicability provision, regardless of whether it has been modified, altered, or repaired in the area subject to the requirements of this AD. For airplanes that have been modified, altered, or repaired so that the performance of the requirements of this AD is affected, the owner/operator must use the authority provided in paragraph (b) of this AD to request approval from the FAA. This approval may address either no action, if the current configuration eliminates the unsafe condition; or different actions necessary to address the unsafe condition described in this AD. Such a request should include an assessment of the effect of the changed configuration on the unsafe condition addressed by this AD. In no case does the presence of any modification, alteration, or repair remove any airplane from the applicability of this AD.

Compliance: Required as indicated, unless accomplished previously.

To prevent the opening and/or separation of the large cargo doors while the airplane is in flight, which could result in rapid decompression and/or structural damage to the airplane, accomplish the following:

(a) Within 6 months after the effective date of this AD, accomplish either paragraph (a)(1) or (a)(2) of this AD, as applicable, in accordance with Fokker Service Bulletin SBF100–52–045, dated August 25, 1993.

(1) For airplanes having serial numbers listed in Part 1 of the Accomplishment Instructions of Fokker Service Bulletin SBF100–52–045, dated August 25, 1993: Perform an inspection to determine the torque value of the attaching parts of the interlock mechanism of the large cargo doors, in accordance Part 1 of the Accomplishment Instructions of the service bulletin. If the torque value is outside the limits specified in paragraphs 2.C.(1) and 2.C.(2) of the Accomplishment Instructions of the service bulletin, prior to further flight, adjust the torque value in accordance with the service bulletin.

(2) For airplanes having serial numbers listed in Part 2 of the Accomplishment Instructions of Fokker Service Bulletin SBF100–52–045, dated August 25, 1993: Remove the spring from the interlock mechanism, and install a new microswitch bracket and new springs in the interlock mechanism, in accordance with Part 2 of the Accomplishment Instructions of the service bulletin.

(b) An alternative method of compliance or adjustment of the compliance time that provides an acceptable level of safety may be used if approved by the Manager, Standardization Branch, ANM–113, FAA, Transport Airplane Directorate. Operators shall submit their requests through an appropriate FAA Principal Maintenance Inspector, who may add comments and then send it to the Manager, Standardization Branch, ANM–113.

Note 2: Information concerning the existence of approved alternative methods of compliance with this AD, if any, may be obtained from the Standardization Branch, ANM–113.

(c) Special flight permits may be issued in accordance with sections 21.197 and 21.199 of the Federal Aviation Regulations (14 CFR 21.197 and 21.199) to operate the airplane to a location where the requirements of this AD can be accomplished.

Issued in Renton, Washington, on July 13, 1995.

James V. Devany,

Acting Manager, Transport Airplane Directorate, Aircraft Certification Service.

[FR Doc. 95–17707 Filed 7–18–95; 8:45 am]

BILLING CODE 4910–13–U

ENVIRONMENTAL PROTECTION AGENCY

40 CFR Part 52

[OR45–1–6762b; FRL–5251–5]

Approval and Promulgation of State Implementation Plans: Oregon

AGENCY: Environmental Protection Agency (EPA).

ACTION: Proposed rule.

SUMMARY: The EPA proposes to approve the State Implementation Plan (SIP) revision to the State of Oregon's Air Quality Control Plan Volume 2 (The Federal Clean Air Act State Implementation Plan and other State Regulations), specifically a revision to Section 2.2, Legal Authority, of the State's Implementation Plan (SIP) and a revision to Chapters 468 and 468A of the Oregon Revised Statutes (ORS). The SIP revision was submitted to address section 110(a)(2)(E) of the Clean Air Act, as amended (CAA).

In the final rules section of this **Federal Register**, the EPA is approving the State's SIP revision as a direct final rule without prior proposal because the Agency views this as a noncontroversial revision and anticipates no adverse comments. A detailed rationale for the approval is set forth in the direct final rule. If no adverse comments are received in response to this proposed rule, no further activity is contemplated in relation to this rule. If the EPA receives adverse comments, the direct final rule will be withdrawn and all public comments received will be addressed in a subsequent final rule based on this proposed rule. The EPA will not institute a second comment period on this notice.

DATES: Comments on this proposed rule must be received in writing by August 18, 1995.

ADDRESSES: Written comments should be addressed to Montel Livingston, Environmental Protection Specialist (AT–082), Air Programs Section, at the EPA Regional Office listed below. Copies of the documents relevant to this proposed rule are available for public inspection during normal business hours at the following locations. The interested persons wanting to examine these documents should make an appointment with the appropriate office at least 24 hours before the visiting day.

U.S. Environmental Protection Agency, Region 10, Air Programs Section, 1200 6th Avenue, Seattle, WA 98101.

The State of Oregon Department of Environmental Quality, 811 SW., Sixth Avenue, Portland, Oregon 97204–1390.

FOR FURTHER INFORMATION CONTACT: Rindy Ramos, Air & Radiation Branch (AT–082), EPA, Seattle, Washington 98101, (206) 553–6510.

SUPPLEMENTARY INFORMATION: See the information provided in the direct final rule which is located in the Rules Section of this **Federal Register**.

Dated: June 23, 1995.

Chuck Clarke,

Regional Administrator.

[FR Doc. 95–17671 Filed 7–18–95; 8:45 am]

BILLING CODE 6560–50–P

FEDERAL COMMUNICATIONS COMMISSION

47 CFR Part 64

[CC Docket No. 91–346; DA 95–1512]

Intelligent Networks

AGENCY: Federal Communications Commission.

ACTION: Proposed Rules; Extension of Time.

SUMMARY: This order provides an extension of time for parties to file comments and reply comments on the Intelligent Networks proceeding so that parties can file more substantive responses.

DATES: *Comment dates:* The dates for filing comments and reply comments are July 19, 1995 and August 2, 1995, respectively.

ADDRESSES: Federal Communications Commission, 1919 M Street, N.W., Washington, D.C. 20554.

FOR FURTHER INFORMATION CONTACT: Rose Crellin, Policy and Program Planning Division, Common Carrier Bureau (202) 418–1571.

SUPPLEMENTARY INFORMATION: The Commission proposed to adopt rules on intelligent networks in a Notice of Proposed Rulemaking in this docket (58 FR 48623, September 17, 1993). In a subsequent public notice, released June 28, 1995, (not published in the **Federal Register**) the Commission sought comment on a filing by Bell Atlantic, GTE, Pacific Bell, Southwestern Bell, and five other local exchange carriers (LECs), which presented an industry-wide collaborative proposal for an intelligent network (IN) project (IN) project). In the IN project, the LECs propose to explore the service creation capabilities of IN platforms owned by LECs and third parties in connection with exchange and exchange access services. The LECs propose laboratory tests and field trials to obtain data regarding the requirements and issues concerning mediated access in the IN. The proposed IN project would be voluntary and may include LECs, interexchange carriers, enhanced service providers, and other telecommunications providers. At the completion of the 24-month IN project, the LECs propose to deliver a final report to the industry and the Commission. The LECs recommend that the Commission recognize the IN Project as the appropriate way to proceed in the IN proceeding.

In addition, the public notice sought comment on a filing by Ameritech on June 26, 1995, in which Ameritech provided an IN competitive network report to the Common Carrier Bureau in which it states that there has been increased competition and consumer choice in access to and use of intelligent network capabilities.

Thus, Ameritech contends, there is no longer a need for the Commission to mandate IN access as proposed in the Notice of Proposed Rulemaking.

Adopted: July 5, 1995
Released: July 5, 1995

By the Chief, Policy and Program Planning Division, Common Carrier Bureau:

1. On June 30, 1995, NYNEX Telephone Companies (NYNEX) requested an extension of time to file comments and reply comments in the Intelligent Networks (INs) proceeding. Comments are scheduled to be filed by July 12, 1995 and replies by July 19, 1995.[1] NYNEX seeks an extension until July 26, 1995 for comments and August 9, 1995 for replies.

2. NYNEX gives three reasons for its request. First, NYNEX argues that it has had difficulty in obtaining the two filings in the proceedings on which the Commission seeks comment. Second, NYNEX argues that the filings ''raise complex substantive matters'' that will require additional time for adequate review. Third, NYNEX asserts that additional time will enable more focused and thorough submissions.

3. We do not routinely grant extensions of time.[2] In this case, however, we are persuaded that because of the complexity of the issues presented by the two filings that additional time will enable commenting parties to develop more substantive responses. In the Public Notice, the Commission sought comment on the collaborative proposal for market trials and laboratory tests for intelligent network services filed by Bell Atlantic, GTE, Pacific Bell, Southwestern Bell and five other supporting local exchange carriers (LECs). The LECs presented the proposal as the method for the Commission to proceed on INs rather than the mediated access proposed in the Notice of Proposed Rulemaking (NPRM) in CC Docket No. 91–346 (58 FR 48623, September 17, 1993). The Public Notice also sought comment on the report filed by Ameritech regarding competitively provided INs. Ameritech contends that there has been increased competition and consumer choice in access to and use of IN capabilities since the release of the NPRM. Thus, Ameritech contends that the Commission should not mandate third party access.

4. Because of the complex technology and competitive issues presented by these filings, we conclude that parties should have additional time to develop their responses. Although it is important to provide parties sufficient time to more fully respond to the two filings, we decline to provide the full period requested by NYNEX because it would result in delays in the proceeding. We conclude that an additional week for the comment and reply periods will provide parties with sufficient time to prepare responses. Therefore, we grant all parties an extension of time for the filing of comments from July 12, 1995 to July 19, 1995 and for the filing of reply comments from July 19, 1995 to August 2, 1995.

4. Accordingly, it is ordered that the NYNEX Request for Extension of Time is granted to the extent provided herein, and otherwise is denied.[3]

Federal Communications Commission.

James D. Schlichting,

Chief, Policy and Program Planning Division, Common Carrier Bureau.

[FR Doc. 95–17790 Filed 7–18–95; 8:45 am]

BILLING CODE 6712–01–M

47 CFR Part 73

[MM Docket No. 93–191; RM–8088]

Television Broadcasting Services; Pueblo, CO

AGENCY: Federal Communications Commission.

ACTION: Proposed rule; denial.

SUMMARY: The Commission denies a petition for rule making filed jointly by the University of Southern Colorado

[1] Public Notice, Intelligent Networks Proceeding, CC Docket 91–346, DA 95–1456, released June 28, 1995.

[2] 47 C.F.R. 1.46(a).

[3] This action is taken pursuant to Sections 4(j) and 5(c) of the Communications Act of 1934, as amended, 47 U.S.C. §§ 154(j) and 155(c), and authority delegated thereunder pursuant to Sections 0.91 and 0.291 of the Commission's Rules, 47 C.F.R. 0.91 and 0.291.

(''USC''), licensee of noncommercial television Station KTSC(TV), Channel *8, Pueblo, Colorado, and Sangre De Cristo Communications, Inc. (''SCC''), licensee of commercial television Station KOAA-TV, Channel 5, Pueblo, Colorado. U.S.C. and SCC requested to exchange channels, and sought to include in the channel exchange a construction permit held by U.S.C. to relocate its transmitter to a short-spaced site. The Commission denies the petition because it would be contrary to FCC policy to grant SCC a minimum spacing waiver at the allotment rule making stage. U.S.C. and SCC stated that they were not interested in pursuing the Commission's alternative proposal, set forth in its *Notice of Proposed Rule Making*, 58 FR 38548 (July 19, 1993). The Commission also denies a petition filed by U.S.C. and SCC requesting that this rule making proceeding be consolidated with various application proceedings. With this action your proceeding is terminated.

EFFECTIVE DATE: July 19, 1995.

FOR FURTHER INFORMATION CONTACT: Diane Conley, Mass Media Bureau, (202)776–1653.

SUPPLEMENTARY INFORMATION: This is a synopsis of the Commission's *Report and Order*, MM Docket No. 93–191, adopted June 30, 1995, and released on July 14, 1995. The full text of this Commission decision is available for public inspection and copying during normal business hours in the FCC Reference Center (Room 239), 1919 M Street, NW., Washington, DC. The complete text of this decision may also be purchased from the Commission's copy contractors, International Transcription Service, Inc., (202) 857–3800, 2100 M Street, NW., Suite 140, Washington, DC 20037.

List of Subjects in 47 CFR Part 73

Television broadcasting.

Federal Communications Commission.

John A. Karousos,

Chief, Allocations Branch, Policy and Rules Division, Mass Media Bureau.

[FR Doc. 95–17725 Filed 7–18–95; 8:45 am]

BILLING CODE 6712–01–F

---

47 CFR Part 73

[MM Docket No. 95–108, RM 8631]

Radio Broadcasting Services; Ankeny and West Des Moines, IA

AGENCY: Federal Communications Commission.

ACTION: Proposed rule.

SUMMARY: This document requests comments on a petition filed by Fuller-Jeffrey Broadcasting Corporation of Greater Des Moines, licensee of Station KJJY-FM, Channel 223C2, Ankeny, Iowa, proposing the reallotment of Channel 223C2 from Ankeny to West Des Moines, Iowa, and the modification of its license to specify West Des Moines as its community of license, in accordance with Section 1.420(i) of the Commission's Rules. Channel 223C2 can be allotted to West Des Moines in compliance with the Commission's minimum distance separation requirements at its current site. The coordinates for Channel 223C2 at West Des Moines are North Latitude 41–39–53 and West Longitude 93–45–24.

DATES: Comments must be filed on or before September 5, 1995, and reply comments on or before September 20, 1995.

ADDRESSES: Federal Communications Commission, Washington, DC 20554. In addition to filing comments with the FCC, interested parties should serve the petitioner, or its counsel or consultant, as follows: John Griffith Johnson, Jr., Bryan, Cave, McPheeters & McRoberts, 700 13th Street, NW., Suite 700, Washington, DC 20005–3960 (Attorney for Petitioner).

FOR FURTHER INFORMATION CONTACT: Arthur D. Scrutchins, Mass Media Bureau, (202) 776–1660.

SUPPLEMENTARY INFORMATION: This a synopsis of the Commission's *Notice of Proposed Rule Making*, MM Docket No. 95–108, adopted June 29, 1995, and released July 14, 1995. The full text of this Commission decision is available for inspection and copying during normal business hours in the FCC Reference Center (Room 239), 1919 M Street, NW., Washington, DC. The complete text of this decision may also be purchased from the Commission's copy contractors, International Transcription Service, Inc., (202) 857–3800, 1919 M Street, NW., Room 246, or 2100, M Street, NW., Suite 140, Washington, DC 20037.

Provisions of the Regulatory Flexibility Act of 1980 do not apply to this proceeding.

Members of the public should note that from the time a Notice of Proposed Rule Making is issued until the matter is no longer subject to Commission consideration or court review, all *ex parte* contacts are prohibited in Commission proceedings, such as this one, which involve channel allotments. See 47 CFR 1.1204(b) for rules governing permissible *ex parte* contacts.

For information regarding proper filing procedures for comments, see 47 CFR 1.415 and 1.420.

List of Subjects in 47 CFR Part 73

Radio broadcasting.

Federal Communications Commission.

John A. Karousos,

Chief, Allocations Branch, Policy and Rules Division, Mass Media Bureau.

[FR Doc. 95–17726 Filed 7–18–95; 8:45 am]

BILLING CODE 6712–01–F

DEPARTMENT OF TRANSPORTATION

National Highway Traffic Safety Administration

49 CFR Part 571

Denial of Petition for Rulemaking; Federal Motor Vehicle Safety Standards

AGENCY: National Highway Traffic Safety Administration (NHTSA), Department of Transportation.

ACTION: Denial of petition for rulemaking.

SUMMARY: This document denies Mr. John Chevedden's petition for rulemaking to specify the rear license plate mounting location of certain trucks. NHTSA's analysis of the petition concludes that this action would have a negligible effect on reducing crashes or fatalities and that to conduct any more than a cursory technical review would use public resources inappropriately.

FOR FURTHER INFORMATION CONTACT: Mr. Richard Van Iderstine, Office of Rulemaking, NHTSA, 400 Seventh Street, SW, Washington, DC 20590. Mr. Van Iderstine's telephone number is: (202) 366–5275. His facsimile number is (202) 366–4329.

SUPPLEMENTARY INFORMATION: By letter dated May 31, 1995, Mr. John Chevedden petitioned the agency to issue a rule applicable to new trucks with off-center rear license plates. Mr. Chevedden asked NHTSA to mandate that those license plates be positioned on the driver's side. Mr. Chevedden stated that the rulemaking was needed because it is a safety enhancement that will prevent death, injury and property damage. Mr. Chevedden speculates that a reflectorized license plate mounted on the driver's side, instead of the passenger side, will serve as a back-up reflector and safety warning in many cases where the vehicle's rear lights are not operating. He stated that the driver's side mounting would be more useful than the passenger side location in

marking the edge of the vehicle closest to the roadway.

In a recent denial of a petition from Mr. Chevedden requesting a similar requirement for front license plates (60 FR 19716) the agency estimated that if it were to specify that those vehicles with off-center front license plates have their front plates located on the driver's side, the number of lives saved would not exceed one life for every 588 years.

This petition applies only to light trucks which are about half of the new vehicle population, making the possibility of benefit about half that of the previous petition. Additionally, while all vehicles have rear license plates and not all have front plates, all vehicles also have two rear red reflex reflectors. Thus, any benefit associated with the possibility of having more vehicles with driver-side plates, would be overshadowed because the effectiveness of such a treatment is dwarfed by the effectiveness of the reflectors already present on the vehicles.

Based on that recent analysis and these facts, the agency believes that the benefit from Mr. Chevedden's new petition would be smaller than his previous petition.

In accordance with 49 CFR part 552, this completes the agency's technical review of the petition. The agency has concluded that there is no reasonable possibility that the amendment requested by the petitioner would be issued at the conclusion of a rulemaking proceeding. The agency notes that the petition is basically repetitive of an earlier petition. After considering all relevant factors, including the need to allocate and prioritize limited agency resources to best accomplish the agency's safety mission, the agency has decided to deny the petition.

Authority: 49 U.S.C. 30103, 30162; delegation of authority at 49 CFR 1.50 and 501.8.

Issued on: July 13, 1995.

Barry Felrice,

Associate Administrator for Safety Performance Standards.

[FR Doc. 95–17772 Filed 7–18–95; 8:45 am]

BILLING CODE 4910–59–P

DEPARTMENT OF COMMERCE

National Oceanic and Atmospheric Administration

50 CFR Parts 216 and 229

[I.D. 052395C]

RIN 0648–AH33

Taking of Marine Mammals Incidental to Commercial Fishing Operations; Authorization for Commercial Fisheries; Proposed List of Fisheries; Correction

AGENCY: National Marine Fisheries Service (NMFS), National Oceanic and Atmospheric Administration (NOAA), Commerce.

ACTION: Proposed rule; correction.

SUMMARY: This document contains corrections to the proposed List of Fisheries (LOF) contained in a proposed rule that was published on Friday, June 16, 1995. NMFS issued a proposed LOF that categorized fisheries according to frequency of incidental serious injury and mortality of marine mammals. The proposed rule is intended to provide for a limited exemption of commercial fisheries from the Marine Mammal Protection Act of 1972 (MMPA) moratorium on the taking of marine mammals.

DATES: Comments on the proposed rule must be received by July 31, 1995, Comments on the proposed LOF must be received by September 14, 1995.

ADDRESSES: Send comments to Chief, Marine Mammal Division, Office of Protected Resources, 1315 East-West Highway, Silver Spring, MD 20910.

FOR FURTHER INFORMATION CONTACT: Robyn Angliss, Office of Protected Resources, 301–713–2322.

SUPPLEMENTARY INFORMATION: Section 118(c) of the MMPA requires NMFS to publish a LOF, along with the marine mammals and number of vessels or persons involved in each such fishery. A notice of proposed revisions to the last LOF is to be published in the **Federal Register** on or about July 1 of each year for the purpose of receiving public comment, and a final LOF is to be published on or about October 1 of each year, which would become effective January 1 of the next calendar year. On June 16, 1995 (60 FR 31666), NMFS published a proposed LOF for calendar year 1996 in two tables: Table 1—Proposed List of Fisheries (Commercial Fisheries in the Pacific Ocean), and Table 2—Proposed List of Fisheries (Commercial Fisheries in the Atlantic Ocean, Gulf of Mexico and Caribbean). However, in these two tables, several marine mammal species/stocks were inadvertently omitted or misidentified in several fisheries. Also, a plus (+) designation indicating a stock is listed as threatened or endangered under the Endangered Species Act was inadvertently omitted from several stock and species codes. This document corrects these errors.

Correction of Publication

Accordingly, in proposed rule document FR Doc. 95–14828, beginning on page 31666 in the **Federal Register** issue of Friday, June 16, 1995, make the following corrections:

1. On page 31682, in Table 1, under Category III the entry for ''AK salmon troll'' is corrected to read as follows:

TABLE 1.—PROPOSED LIST OF FISHERIES

[Commercial Fisheries in the Pacific Ocean]

Fishery description	Estimated No. of vessels/persons	Marine mammal species/stocks involved
* * * * *	*	*
AK salmon troll	1,450	1*+, 2*+, 3*, 5, 6, 26*+.
* * * * *	*	*

2a. On page 31684, in Table 2, under Category I, the entries for ''Atlantic Ocean, Caribbean, Gulf of Mexico swordfish, tuna, shark drift gillnet'' and ''New England multispecies sink gillnet'' are corrected, and

2b. On page 31685, in Table 2,under Category III, the entries for ''Gulf of Maine, U.S. mid-Atlantic mixed species

trap/pot'', ''Gulf of Maine, U.S. mid-Atlantic inshore lobster trap/pot'', ''Atlantic Ocean, Gulf of Mexico blue crab trap/pot'', and U.S. South Atlantic, Gulf of Mexico, Caribbean spiny lobster trap/pot are corrected to read as follows:

TABLE 2.—PROPOSED LIST OF FISHERIES

[Commercial Fisheries in the Atlantic Ocean, Gulf of Mexico, and Caribbean]

Description of fishery	Estimated No. of vessels/persons	Marine mammal species/stocks involved
Atlantic Ocean, Caribbean, Gulf of Mexico swordfish, tuna, shark drift gillnet	75	32*+, 33*+, 38*+, 49, 50*, 51*, 52, 54*, 57, 58, 59*.
New England multispecies sink gillnet	341	32*+, 33*+, 36, 50*, 51*, 52, 61, 62, 63.
* * * * *	*	*
*Gulf of Maine, U.S. mid-Atlantic mixed species trap/pot	100	32*+, 33*+, 36, 61*, 62, 63.
* * * * *	*	*
Gulf of Maine, U.S. mid-Atlantic inshore lobster trap/pot	10,613	32*+, 33*+, 36, 52, 62.
* * * * *	*	*
Atlantic Ocean, Gulf of Mexico blue crab trap/pot	20,500	32*+, 73, 74, 75, 153*+.
* * * * *	*	*
U.S. South Atlantic, Gulf of Mexico, Caribbean spiny lobster trap/pot	736	32*+, 73, 74, 75, 153*.
* * * * *	*	*

3a. On page 31685, in the key to Tables 1 and 2 the following entries are corrected to read as follows:

SPECIES AND STOCK CODES FOR MARINE MAMMALS OCCURRING IN U.S. WATERS

[Some, but not all stocks listed are taken in the course of commercial fishing operations]

Code	Common name	Stock designation
1	Steller sea lion	Western U.S.*+.
2	Steller sea lion	Eastern U.S.*+.
*	*	*
26	Humpback whale	Western North Pacific*+.
27	Humpback whale	Central North Pacific*+.
28	Fin whale	N. Pacific*+.
*	*	*
29	Northern right whale.	North Pacific*+.
31	Bowhead whale	Western Arctic Stock*+.
32	North Atlantic right whale.	Western North Atlantic*+.
33	Humpback whale	Western North Atlantic*+.
34	Fin whale	Western North Atlantic*+.
35	Sei whale	Western North Atlantic*+.
*	*	*
37	Blue whale	Western North Atlantic*+.
38	Sperm whale	Western North Atlantic*+.

SPECIES AND STOCK CODES FOR MARINE MAMMALS OCCURRING IN U.S. WATERS—Continued

[Some, but not all stocks listed are taken in the course of commercial fishing operations]

Code	Common name	Stock designation
*	*	*
66	Sperm whale	Northern Gulf of Mexico*+.
92	Sperm whale	California to Washington*+.
93	Humpback whale	California/Mexico*+.
94	Blue whale	California/Mexico*+.
95	Fin whale	California to Washington*+.
*	*	*
97	Sei whale	Eastern North Pacific*+.
*	*	*
120	Blue whale	Hawaii*+.
121	Fin whale	Hawaii*+.
*	*	*
135	Sperm whale	Hawaii*+.
*	*	*
145	Hawaiian monk seal.	Hawaii*+.
153	Florida manatee	Florida*+.
*	*	*

3b. On page 31687, at the end of the key to Tables 1 and 2 the following footnotes are added:

*Strategic stock.

+Stock listed as threatened or endangered under the Endangered Species Act.

Dated: July 12, 1995.

Charles Karnella,

Acting Assistant Administrator for Fisheries, National Marine Fisheries Service.

[FR Doc. 95–17681 Filed 7–14–95; 9:57 am]

BILLING CODE 3510–22–P

50 CFR Chapter VI

[I.D. 071095A]

South Atlantic Fishery Management Council; Public Hearings

AGENCY: National Marine Fisheries Service (NMFS), National Oceanic and Atmospheric Administration (NOAA), Commerce.

ACTION: Public hearings.

SUMMARY: The South Atlantic Fishery Management Council (Council) will hold public hearings to solicit comments on management measures for a new Fishery Management Plan for Golden Crab (FMP).

DATES: Written comments regarding the issues being discussed at the hearings will be accepted through August 18, 1995.

The hearings are scheduled as follows:

1. Tuesday, August 1, 1995, 7.00 p.m., Cocoa Beach, FL;
2. Wednesday, August 2, 1995, 7.00 p.m., Fort Lauderdale, FL;
3. Thursday, August 3, 1995, 7.00 p.m., Marathon, FL; and

4. Monday, August 7, 1995, 7.00 p.m., Charleston, SC.

ADDRESSES: To send comments, and to request copies of public hearing documents, write to: Robert K. Mahood, Executive Director, South Atlantic Fishery Management Council, One Southpark Circle, Suite 306, Charleston, SC 29407–4699. The hearings will be held at the following locations:

1. Cocoa Beach—Holiday Inn, 1300 N. Atlantic Avenue, Cocoa Beach, FL 32931; telephone (407) 783–2271;
2. Fort Lauderdale—Sheraton Design Center Hotel, 1825 Griffin Road, Dania, FL 33004; telephone (305) 920–3500;
3. Marathon—Hawk's Cay Resort, MM61, Duck Key, FL 33050; telephone (305) 743–7000; and
4. Charleston—Town and Country Inn, 2008 Savannah Highway, Charleston, SC 29407; telephone (803) 571–1000.

FOR FURTHER INFORMATION CONTACT: Sharon Coste, (803) 571–4366; Fax: (803) 769–4520.

SUPPLEMENTARY INFORMATION: Increasing interest in fishing opportunities for golden crab has prompted the Council to consider management of this species along the U.S. Atlantic coast from the tip of Key West on the east coast of Florida to the North Carolina/Virginia border. Other deep-water crabs, such as red crab and jonah crab, are included in the FMP for data collection purposes only. No management actions are planned for these species under the initial FMP. Although all three species of crab are harvested in the exclusive economic zone off the Gulf of Mexico and the Atlantic coast, the Council believes that the species are sufficiently separated from one another to be managed independently. The following types of management measures are under consideration by the Council:

(1) Definition of terms, including: Optimum yield, overfishing, and crustacean trap;

(2) Gear controls, including: Use of traps only and a limit on their size, requirements for trap escape gaps, and degradable escape panels;

(3) Effort limitations, including: Quotas ranging from 100,000 to 5,000,000 lb (45,359 to 2,267,962 kg) live weight, which may differ by subarea, limited access with mechanisms (i.e. fees) for recovering incurred administrative costs, restrictions on the number of traps/pots per vessel ranging from 100 to 1,000 traps/pots per vessel, and, trip limits of 10,000 lb (4,536 kg) live weight or 5,000 lb (2,268 kg) butchered;

(4) Crab size/sex restrictions, including: Minimum size limits of 4 and 3/4 inch (12 cm) carapace width and no retention of females;

(5) Area restrictions, including: Limiting use of traps to depths of 900 ft (274 m) or greater;

(6) Bait restrictions to protect snapper and grouper;

(7) Enforcement provisions, including: Vessel permits, trap identification tags, vessel location transponders, and dealer permits;

(8) Collection of information requirements for science and research purposes, such as use of information from sales reports, and logbook requirements, and;

(9) Framework procedures to provide administrative flexibility to change management measures in a timely manner.

The Council plans to finalize the FMP at the Council meeting in Charleston, SC, from August 21 to 25, 1995. The public will have an opportunity to comment at the full Council session before the options are approved. Once finalized, the FMP will be submitted to the Secretary of Commerce for review. Also, NMFS will provide a 45-day formal written comment period during the 110-day review period.

The Council hearings are physically accessible to people with disabilities. Requests for sign language interpretation or other auxiliary aids should be directed to the Council office by July 18, 1995 (see **ADDRESSES**).

Authority: 16 U.S.C. 1801 *et seq.*

Dated: July 12, 1995.

Richard W. Surdi,

Acting Director, Office of Fisheries Conservation and Management, National Marine Fisheries Service.

[FR Doc. 95–17687 Filed 7–18–95; 8:45 am]

BILLING CODE 3510–22–F

---

50 CFR Part 661

[Docket No. 950426116–5116–01; I.D. 071095B]

Ocean Salmon Fisheries Off the Coasts of Washington, Oregon, and California; Closure

AGENCY: National Marine Fisheries Service (NMFS), National Oceanic and Atmospheric Administration (NOAA), Commerce.

ACTION: Closure.

SUMMARY: NMFS announces that the recreational salmon fishery in the area from Humbug Mountain, OR, to Horse Mountain, CA, was closed at midnight, July 1, 1995. The Director, Northwest Region, NMFS (Regional Director), determined that the recreational quota of 10,600 chinook salmon for the area had nearly been reached. This action was necessary to conform to the preseason announcement of the 1995 management measures and was intended to ensure conservation of chinook salmon.

DATES: Effective at 2400 hours local time, July 1, 1995, until August 16, 1995. Comments will be accepted through August 3, 1995.

ADDRESSES: Comments may be mailed to William Stelle, Jr., Director, Northwest Region, National Marine Fisheries Service, NOAA, 7600 Sand Point Way NE., BIN C15700–Bldg. 1, Seattle, WA 98115–0070; or Hilda Diaz-Soltero, Director, Southwest Region, National Marine Fisheries Service, NOAA, 501 W. Ocean Boulevard, Suite 4200, Long Beach, CA 90802–4213. Information relevant to this document has been compiled in aggregate form and is available for public review during business hours at the office of the NMFS Northwest Regional Director.

FOR FURTHER INFORMATION CONTACT: William L. Robinson, 206–526–6140, or Rodney R. McInnis, 310–980–4030.

SUPPLEMENTARY INFORMATION: Regulations governing the ocean salmon fisheries at 50 CFR 661.21(a)(1) state:

> When a quota for the commercial or the recreational fishery, or both, for any salmon species in any portion of the fishery management area is projected by the Regional Director to be reached on or by a certain date, the Secretary will, by notice issued under § 661.23, close the commercial or recreational fishery, or both, for all salmon species in the portion of the fishery management area to which the quota applies as of the date the quota is projected to be reached.

In the annual management measures for ocean salmon fisheries (60 FR 21746, May 3, 1995), NMFS announced that the 1995 recreational fishery in the area between Humbug Mountain, OR, and Horse Mountain, CA, would open on May 17 and continue through July 8 or attainment of the 10,600 chinook salmon quota, whichever occurs first, with the fishery open Wednesday through Saturday only.

The best available information on July 3 indicated that recreational catches in the area totaled 10,137 chinook salmon through Saturday, July 1, the most recent open period. Based on catch and effort rates, NMFS determined that insufficient fish remained in the chinook salmon quota for another day's fishing. Accordingly, in order to avoid exceeding the quota on the next opening, NMFS determined not to reopen the fishery on Wednesday, July 5, its next scheduled opening.

The Regional Director consulted with representatives of the Pacific Fishery Management Council, the Oregon Department of Fish and Wildlife, and the California Department of Fish and Game regarding this closure. The States of Oregon and California will manage the recreational fishery in State waters adjacent to this area of the exclusive economic zone in accordance with this Federal action. In accordance with the inseason notice procedures of 50 CFR 661.23, actual notice of this action was given to fishermen prior to 0001 hours local time, July 5, 1995, the next scheduled opening, by telephone hotline number (206) 526–6667 and (800) 662–9825 and by U.S. Coast Guard Notice to Mariners broadcasts on Channel 16 VHF-FM and 2182 KHz. Because of the need for immediate action to conserve chinook salmon, the Secretary of Commerce has determined that good cause exists for this document to be issued without affording a prior opportunity for public comment. This document does not apply to other fisheries that may be operating in other areas.

Classification

This action is authorized by 50 CFR 661.21 and 661.23 and is exempt from review under E.O. 12866.

Authority: 16 U.S.C. 1801 *et seq.*

Dated: July 12, 1995.

Richard W. Surdi,

Acting Director, Office of Fisheries Conservation and Management, National Marine Fisheries Service.

[FR Doc. 95–17686 Filed 7–18–95; 8:45 am]

BILLING CODE 3510–22–F

Notices

Federal Register
Vol. 60, No. 138
Wednesday, July 19, 1995

This section of the FEDERAL REGISTER contains documents other than rules or proposed rules that are applicable to the public. Notices of hearings and investigations, committee meetings, agency decisions and rulings, delegations of authority, filing of petitions and applications and agency statements of organization and functions are examples of documents appearing in this section.

DEPARTMENT OF AGRICULTURE

Establishment of Pinhook Purchase Unit, Florida; Correction

AGENCY: Forest Service, USDA.

ACTION: Correction.

SUMMARY: This document corrects the acreage contained in the notice of establishment of the Pinhook Purchase Unit which was published Monday, August 29, 1994 (59 FR 44405). On page 44405, in the 3rd column, under heading Summary, 6th line should be 170,608 and on page 44406, 1st column, 7 lines from the bottom should be 170,608.

FOR FURTHER INFORMATION CONTACT: Ralph Bauman, Lands Staff, 4 South, Forest Service, USDA, P.O. Box 96090, Washington, D.C. 20090–6090 (202) 205–1248.

Dated: July 5, 1995.

Janice H. McDougle,

Associate Deputy Chief.

[FR Doc. 95–17643 Filed 7–18–95; 8:45 am]

BILLING CODE 3410–11–M

DEPARTMENT OF COMMERCE

Foreign-Trade Zones Board

[Docket A(32b1)–11–95]

Foreign-Trade Zone 122—Corpus Christi, TX; Subzone 122B Southwestern Refining (Crude Oil Refinery) Request for Modification of Restrictions

A request has been submitted to the Foreign-Trade Zones Board (the Board) by the Port of Corpus Christi Authority (PCCA), grantee of FTZ 122, pursuant to § 400.32(b)(1) of the Board's regulations, for modification of the restrictions in FTZ Board Order 310 authorizing Subzone 122B at the crude oil refinery of Southwestern Refining (Southwestern) in Corpus Christi, Texas. (Koch Refining Company is in the process of purchasing the refinery.) The request was formally filed on July 13, 1995.

The FTZ Board approved subzone status for the Southwestern refinery in 1985 (Subzone 122B, Board Order 310, 50 FR 38020, 9/19/85). The approval was subject to certain standard restrictions, including one that required the election of privileged foreign status on incoming foreign merchandise.

PCCA is now requesting that this restriction be modified so that the refinery would have the option available under the FTZ Act to choose non-privileged foreign (NPF) status on foreign refinery inputs used to produce certain petrochemical feedstocks and by-products including the following: benzene, toluene, xylenes, hydrocarbon mixtures, distillates/residual fuel oils, kerosene, naphthas, liquified natural gas, ethane, propane, butane, ethylene, propylene, butylene, butadiene, petroleum coke, asphalt, sulfur, sulfuric acid, cumene and pseudocumene.

The request cites the FTZ Board's recent decision in the Amoco, Texas City, Texas case (Board Order 731, 60 FR 13118, 3/10/95) which authorized subzone status with the NPF option noted above. In the Amoco case, the Board concluded that the restriction that precluded this NPF option was not needed under current oil refinery industry circumstances.

Public comment on the proposal is invited from interested parties. Submissions (original and 3 copies) shall be addressed to the Board's Executive Secretary at the address below. The closing period for their receipt is [30 days from date of publication].

A copy of the application and accompanying exhibits will be available for public inspection at the following location: Office of the Executive Secretary, Foreign-Trade Zones Board, U.S. Department of Commerce, Room 3716, 14th & Pennsylvania Avenue NW., Washington, DC 20230.

Dated: July 13, 1995.

Dennis Puccinelli,

Acting Executive Secretary.

[FR Doc. 95–17767 Filed 7–18–95; 8:45 am]

BILLING CODE 3510–DS–P

International Trade Administration

[A–570–834]

Notice of Amended Final Determination of Sales at Less Than Fair Value: Disposable Pocket Lighters From the People's Republic of China

AGENCY: Import Administration, International Trade Administration, Department of Commerce.

EFFECTIVE DATE: July 19, 1995.

FOR FURTHER INFORMATION CONTACT: Cynthia Thirumalai or Todd Hansen, Office of Countervailing Investigations, U.S. Department of Commerce, Room B099, 14th and Constitution Avenue NW., Washington, DC 20230; telephone (202) 482–4087 and 482–1276, respectively.

Amended Final Determination

In accordance with section 735(a) of the Tariff Act of 1930, as amended (''the Act''), on April 27, 1995, the Department of Commerce (''the Department'') made its final determination that disposable pocket lighters from the People's Republic of China (''PRC'') are being, or are likely to be, sold in the United States at less than fair value (60 FR 22359, May 5, 1995). We have determined that ministerial errors were committed for Cli-Claque Company Ltd. (''Cli-Claque'') and PolyCity Industrial Ltd. (''PolyCity'') (see company-specific sections below). The correct margin percentage for Cli-Claque is 0.55%, and 5.49% for PolyCity. The margin percentages for Gao Yao (HK) Hua Fa Industrial Company, Ltd. (''Gao Yao''), China National Overseas Trading Corp. (''COTCO''), and Guangdong Light Industrial Products Import and Export Corp. (''GLIP''), and the PRC-wide rate remain the same.

Scope of Investigation

The products covered by this investigation are disposable pocket lighters, whether or not refillable, whose fuel is butane, isobutane, propane, or other liquefied hydrocarbon, or a mixture containing any of these, whose vapor pressure at 75 degrees Fahrenheit (24 degrees Celsius) exceeds a gauge pressure of 15 pounds per square inch. Non-refillable pocket lighters are imported under subheading 9613.10.0000 of the Harmonized Tariff Schedule of the United States

(''HTSUS''). Refillable, disposable pocket lighters would be imported under subheading 9613.20.0000. Although the HTSUS subheadings are provided for convenience and Customs purposes, our written description of the scope of this proceeding is dispositive.

Certain windproof refillable lighters, as described in memoranda to Barbara R. Stafford, dated December 5, 1994, and April 25, 1995, are excluded from the scope of this investigation. Also excluded from the scope of this investigation are electric lighters (as described in the April 25, 1995 memorandum) which use two AA batteries to heat a coil for purposes of igniting smoking materials, rather than using butane, isobutane, propane, or other liquefied hydrocarbon to fuel a flame for purposes of igniting smoking materials.

Case History

On May 12, 1995, Cli-Claque and petitioner filed allegations of ministerial errors. PolyCity filed its rebuttal to petitioner's allegations on May 16, 1995, followed by Cli-Claque on May 19, 1995.

Applicable Statute and Regulations

Unless otherwise indicated, all citations to the statute and to the Department's regulations are references to the provisions as they existed on December 31, 1994.

Company-Specific Issues

PolyCity

Issue 1: Energy

Petitioner claims that the Department erred in its choice of a source to be used to value PolyCity's energy usage since information it believes more appropriate was available.

PolyCity claims that the Department used the source described in the Calculation Memorandum; therefore, the Department's choice was not a ministerial error.

DOC Position: We agree with PolyCity that this is not a ministerial error and have made no change in our calculations.

Issue 2: Factory Overhead

Petitioner first states that it should be allowed to comment on the factory overhead rate the Department used in the final determination since that was the first time any of the parties knew of the Department's selection of that rate. Petitioner then argues that an adjustment should be made to the factory overhead rate which was applied to all respondents equally to account for the difference in the structure of PolyCity's physical plant compared to other respondents. Petitioner suggests that one possible source is PolyCity's own overhead experience.

PolyCity maintains that in nonmarket economy (''NME'') cases, the Department does not use a respondent's own factory overhead rate. Given this, PolyCity states that petitioner's argument is really a challenge to the Department's long-standing NME methodology.

DOC Position: We find that petitioner's complaint is with our methodology and is not properly an allegation of a clerical error. Moreover, we disagree with petitioner that the factory overhead rate should be adjusted to account for the difference in PolyCity's physical plant structure compared to other respondents. This case is similar to that found in the *Final Determination of Sales at Less than Fair Value: Pure Magnesium From Ukraine (Ukraine Magnesium),* 60 FR 16432, 16447 (March 30, 1995), where petitioners asked that the overhead rate be adjusted upwards to account for one item that had a significant cost associated with it. In *Ukraine Magnesium*, the Department said

[T]he fact that one element (*i.e.*, cell rebuild) of factory overhead has significant cost associated with it does not invalidate the overhead percentage used. Factory overhead is a combination of elements, some of which may be more or less expensive depending on the product or even the company.

Also, the Department has previously rejected line-by-line examinations of factory overhead rates as petitioner would have us do in this instance (see, *e.g., Final Determination of Sales at Less Than Fair Value; Tapered Roller Bearings and Parts Thereof, Finished or Unfinished, From the Socialist Republic of Romania,* 52 FR 17433, 17436, May 8, 1987). Assuming, for argument's sake, that an adjustment was found to be appropriate in such cases, we would be unable to determine whether to adjust the rate upwards for some producers, or downwards for the other producers.

Issue 3: Terminal Handling Charges

Petitioner states that the verification report indicates that an additional terminal handling charge should be added to foreign market value (''FMV'') for two transactions. According to petitioner, it does not appear that these charges were included in the Department's final margin calculations.

PolyCity states that terminal handling charges were reported as ''ocean freight'' expenses as per the Department's instructions pursuant to verification findings. According to PolyCity, the Department used the corrected amounts in its final margin calculations.

DOC Position: We agree with petitioner and PolyCity in part. The terminal handling charges referenced in the verification report were reported in the U.S. sales listing as ''ocean freight.'' While we did properly deduct these expenses from U.S. price (as opposed to adding them to FMV), we inadvertently deducted the incorrect amounts. We have now revised our calculations based on the results of verification.

Gao Yao, COTCO, and GLIP

Issue 1: Labor Rates

Petitioner argues that in the final margin calculations there was no skilled labor factor for Gao Yao, COTCO, and GLIP. While the Department included a factor for direct and indirect labor for all three companies, neither of these were valued at the skilled labor rate. Petitioner asserts that it is difficult to imagine a lighter production facility without any supervisory or management personnel involved in the production process. Therefore, petitioner requests that the Department recalculate the margins for these three companies including a factor for skilled labor.

DOC Position: We disagree with petitioner's assertion that this was a ministerial error. Verification showed that laborers classified by COTCO, Gao Yao, and GLIP as direct or indirect were not skilled. (Some administrative laborers at the factories may have been properly classified as skilled, but expenses for administrative laborers are subsumed in factory overhead in this case.) At none of the production facilities did we note any direct laborers that were treated differently from others or performed tasks that required more than a minimal amount of training or skill. Most direct workers performed simple assembly operations. A few direct workers operated the plastic molding machines which mainly involved pouring raw plastic material into the intake vat, occasionally pulling a lever when the machine released, and sometimes removing extraneous pieces from the molded parts.

As for indirect laborers at all companies, the verification reports show that they performed tasks such as: driving trucks, guarding factory gates, keeping inventory in the warehouses, lighting the lighters and adjusting the flames, etc. At these factories some of the indirect laborers were called ''supervisors'' and line leaders. These ''supervisors''/line leaders mainly kept tallies of the number of pieces each direct laborer produced and, sometimes, recorded the hours they worked. At

none of the factories did we note any indirect laborer whose job required special knowledge, training or skill.

Cli-Claque

Issue 1: Value of Silkscreen Ink

Petitioner argues that when valuing silkscreen ink, the Department should have relied on the more detailed Purchase Order File (''PO File'') provided in Cli-Claque's post-verification submission of March 23, 1995 rather than the verification exhibit prepared by Cli-Claque. According to petitioner, the PO File shows that there were more silkscreening chemicals used than the verification exhibit indicates; therefore, the Department should use the quantity in the PO File to calculate the per-unit silkscreen ink factor.

Cli-Claque explains that the verification exhibit regarding silkscreen ink is based on the PO File with the following adjustments: (1) Orders outside the period of investigation (''POI'') were removed; (2) freight charges from Japan to Hong Kong were included; (3) commissions were added; and (4) a change in quantity for one sale was made based on the actual amount found on the invoice.

DOC Position: We relied on Cli-Claque's verification exhibit regarding silkscreen ink to calculate the cost and usage of that input. We confirmed that all the contracts in the PO File dated within the POI were included in the verification exhibit. For the one contract whose quantity in the verification exhibit was different from that in the PO File, we are relying on the quantity recorded in the verification exhibit. Since the Department confirmed the veracity of information in the PO File during examination of other purchased materials, we found the PO File and, by extension, the verification exhibit regarding silkscreen ink, to be reliable.

Issue 2: Coloring Agents

Petitioner claims that some of the contracts listed in the verification exhibit regarding silkscreen ink really pertain to pigments used to color plastic parts because they are found in the PO File under ''coloring agents,'' separate from ''silkscreen ink.'' Given this, petitioner argues that these contracts should properly be included in the valuation of pigment for plastic parts.

Cli-Claque explains that purchases of silkscreen ink were recorded in its PO File both as ''silkscreen ink'' and ''coloring agents,'' as indicated by the identical product descriptions and unit prices found under both sections.

DOC Position: We disagree with petitioner's allegation that it was an error to include the contracts pertaining to ''coloring agents'' in the calculation of silkscreen ink usage and cost. We examined the PO File and found that the contracts in dispute contained the same product descriptions and prices as items in the silkscreen ink section and were appropriately included with other purchases of silkscreen ink.

Issue 3: Tying of Material Inputs to Production

Since all the contracts for silkscreen ink but one listed in the PO File are dated after the dates of sale for the imprinted lighters sold to the United States, petitioner points out that these purchases of silkscreen ink could not have been used in the production of the merchandise sold to the United States. Petitioner then argues that the value for silkscreen ink should be calculated from the one contract dated before the imprinted lighters were sold to the United States.

DOC Position: We disagree with petitioner that it was an error to use all purchases of silkscreen ink during the entire POI to value this factor. It is the Department's practice not to tie specific market economy inputs to particular production; rather, the Department looks at the entire POI when calculating values.

Issue 4: Imprinted Ordinary Lighters

Petitioner argues that one sale of ordinary lighters should also include a factor for silkscreen ink since it is described in the U.S. sales listing as an imprinted/silkscreened lighter.

Cli-Claque agrees with petitioner that a factor for silkscreen ink should be added to the one sale of ordinary lighters listed as being imprinted.

DOC Position: We agree with both parties that a value for silkscreen ink should be added to lighters listed as being imprinted/silkscreened and have done so because this is a cost of silkscreening and should have been included in that cost.

Issue 5: Freight Charges for Silkscreen Ink

Petitioner maintains that freight charges from Hong Kong to the factory should be added to the cost for silkscreen ink since delivery terms were C&F Hong Kong.

Cli-Claque concurs with petitioner that freight from Hong Kong to the factory should be included in the cost of silkscreen ink.

DOC Position: With respect to including Hong Kong-to-factory freight expenses in the cost of silkscreen ink, we agree with both parties that a value for these expenses should have been included in the calculation of FMV and have included a cost for this item.

Issue 6: Hardener

Petitioner maintains that the hardener used in the silkscreening process should be included as a factor in the margin calculation. Since Cli-Claque provided a listing of the price and quantity of hardener used during the POI, petitioner argues that the Department should divide the quantity of hardener used during the POI by the number of lighters silkscreened during the POI to derive the factor usage during the POI. Petitioner also claims that freight charges should be added to the factor cost of hardener.

Cli-Claque argues that this is not a ministerial error. The Department did not include a factor for hardener in its calculation; therefore, petitioner's disagreement is with the Department's methodology. Should the Department nonetheless decide to include a factor for hardener, Cli-Claque provides calculations of usage and applicable freight expenses.

DOC Position: We agree with petitioner that a factor for hardener should have been included in our calculations since information on the record shows that Cli-Claque used hardener in making its imprinted lighters. To calculate amounts for usage and cost, we followed the methodology proposed by Cli-Claque and petitioner which was based on purchases of hardener during the POI as found in the PO File, average available freight costs for hardener found in the verification exhibit regarding silkscreen ink, and commission rates also found in the verification exhibit.

Issue 7: Tank Body Pigment

Although the Department included a factor for pigment for tank bodies for ordinary lighters, petitioner points out that a factor for pigment was not included for electronic lighters. According to petitioner, the Department should include the same tank body pigment factor for electronic lighters as it did for ordinary lighters since there is no indication that pigment is not used for electronic lighters.

Cli-Claque agrees that a factor for tank body pigment should be included in the calculations for electronic lighters. Instead of using the amount for usage applicable to ordinary lighters, Cli-Claque says that the Department should use its reported amount.

DOC Position: We agree with both petitioner and respondent that a factor for tank body pigment should have been included in the calculations for electronic lighters since pigment is used

to make these lighters. We also agree with Cli-Claque that its reported usage amount should be used.

Issue 8: Foreign Inland Freight

Petitioner argues that the actual freight amount for one U.S. sale as found in the verification report should be used.

Cli-Claque points out that the actual freight charges in the verification report for this sale were based on rates provided to Cli-Claque by a related carrier whereas the freight rate used by the Department in the final determination was based on a quote from an unrelated company.

DOC Position: We disagree with petitioner that the freight charges by the related carrier should be used and have made no change to the freight rate for this one U.S. sale.

Issue 9: Electronic Lighters

Petitioner argues that the Department should use the verified usage amount for one material input used by Cli-Claque in its electronic lighters. Cli-Claque agrees with petitioner.

DOC Position: We agree with both petitioner and Cli-Claque that the verified factor usage for this input should be used.

Issue 10 Purchase of Parts

Cli-Claque alleges that the Department erred when it calculated single weighted-average costs for small O-rings, large O-rings, T-packing and disks. Instead, Cli-Claque argues that the Department should have separated out purchases of parts specific to electronic lighters from those specific to ordinary lighters.

DOC Position: We agree with Cli-Claque that purchases of small O-rings, large O-rings, T-packing, and disks to be used in electronic lighters should be separated from those for ordinary lighters before calculating lighter-specific average costs for these items. The costs of these items are different depending upon the type of lighter they are intended for, and the items are specific to particular lighters and are not interchangeable. Therefore, we have calculated lighter-specific average costs for small O-rings, large O-rings, T-packing and disks.

Issue 11: Filters

Cli-Claque claims that the Department made an error in calculating the per-unit cost of filters for ordinary lighters.

DOC Position: We agree with Cli-Claque that we made an error in calculating the per-unit cost of filters for ordinary lighters and have recalculated that cost. In Cli-Claque's PO File, one purchase of filters contained a data entry error regarding total invoice value. The total invoice value was ten times the amount derived by multiplying the unit price by the quantity ordered. (In the final determination, we used the amounts for total invoice value to calculate the average cost of filters.) Since the reported unit price for this purchase was consistent with prices for other contracts, we used the reported unit prices and quantities to recalculate the average unit cost of filters.

Issue 12: Nozzles and Nozzle Bottoms

Cli-Claque argues that the weighted-average price calculated for nozzles and nozzle bottoms for ordinary lighters is overstated because the prices for nozzle/nozzle bottom sets were included in the calculation as single pieces. According to Cli-Claque, the Department should divide the price of sets by two to arrive at a price for either a nozzle or nozzle bottom separately.

DOC Position: We agree with Cli-Claque that the prices of nozzle/nozzlebottom sets were incorrectly included as single pieces. Therefore, we have revised our calculations of per-unit costs of nozzles and nozzle bottoms to reflect that the price of a set should be allocated to both the nozzle and the nozzle bottom.

Issue 13: Weight of Sidewheels

Cli-Claque states that the Department inadvertently used the wrong per-unit weight for sidewheels.

DOC Position: We agree that the wrong weight for sidewheels was used and have revised our calculations.

Issue 14: Freight Cost for Sidewheels and Certain Packing Materials

In calculating the freight cost for sidewheels and certain packing materials, Cli-Claque maintains that the Department did not multiply the surrogate freight rate (which is on a per kilogram basis) by the weight of the item.

DOC Position: We agree with Cli-Claque that the per-kilogram freight rate should have been multiplied by the weight of the sidewheel to arrive at the per-unit freight cost and have revised our calculations accordingly.

Issue 15: Skilled Labor

Cli-Claque argues that when calculating the factor for both skilled and unskilled labor, the Department added the factor for skilled assembly labor to the factors for unskilled plastic and metal labor rather than to the factors for skilled plastic and metal labor.

DOC Position: We agree with Cli-Claque that the factor for skilled assembly labor should be added to that for skilled metal and plastic labor and have revised our labor calculations.

Issue 16: Pigment for Plastic Parts

Cli-Claque states that the Department erred when it valued the factor for pigment with the per-unit cost of silkscreen ink. According to Cli-Claque, pigment, which is different than silkscreen ink, was sourced from the PRC; therefore, the Department should value this factor with a surrogate value.

DOC Position: We agree with Cli-Claque that the factor for pigment should not be valued using a cost for silkscreen ink and, instead, have valued pigment for plastic parts using information on first quarter 1994 Indonesian import statistics found in *Foreign Trade Statistical Bulletin: Imports*, March 1994.

Issue 17: Profit:

During our examination of Cli-Claque's margin calculations pursuant to this amended final determination, we noticed that profit had not been added to the calculation of FMV for ordinary lighters. We have corrected this error.

Amended Weighted Average Dumping Margins

The weighted-average dumping margins are as follows:

Manufacturer/producer/exporter	Weighted-average margin percentage	Critical circumstances
Tianjin Jin Yi Lighter Co./China National Overseas Trading Corporation.	0.00	Affirmative.
Cli-Claque Company Ltd..	0.55	Affirmative.
Gao Yao (HK) Hua Fa Industrial Co., Ltd..	0.00	Negative.
Guangdong Light Industrial Products Import and Export Corporation.	27.91	Negative.
PolyCity Industrial, Ltd..	5.49	Negative.
PRC-Wide	197.85	Affirmative.

ITC Notification

In accordance with section 735(d) of the Act, we notified the International Trade Commission (''ITC'') of our amended final determination.

Termination of Suspension of Liquidation

On June 2, 1995, the ITC determined that these imports neither cause, nor threaten to cause, material injury to the industry in the United States. Therefore, we are directing the U.S. Customs Service to refund or cancel all securities posted.

This notice is published pursuant to sections 735(d) and (e) of the Act and 19 CFR 353.20(a)(4).

Susan G. Esserman,

Assistant Secretary for Import Administration.

Dated: July 5, 1995.

[FR Doc. 95–17766 Filed 7–18–95; 8:45 am]

BILLING CODE 3510–DS–P

City University of Wisconsin, et al.; Notice of Consolidated Decision on Applications for Duty-Free Entry of Electron Microscopes

This is a decision consolidated pursuant to Section 6(c) of the Educational, Scientific, and Cultural Materials Importation Act of 1966 (Pub. L. 89–651, 80 Stat. 897; 15 CFR part 301). Related records can be viewed between 8:30 A.M. and 5:00 P.M. in Room 4211, U.S. Department of Commerce, 14th and Constitution Avenue, N.W., Washington, D.C.

Docket Number: 95–032. *Applicant:* University of Wisconsin, Madison, WI 53706. *Instrument:* Electron Microscope, Model CM120. *Manufacturer:* Philips, The Netherlands. *Intended Use:* See notice at 60 FR 29826, June 6, 1995. *Order Date:* October 18, 1994.

Docket Number: 95–034. *Applicant:* Argonne National Laboratory, Argonne, IL 60439. *Instrument:* Electron Microscope, Model H-9000NAR. *Manufacturer:* Hitachi, Japan. *Intended Use:* See notice at 60 FR 29826, June 6, 1995. *Order Date:* April 27, 1994.

Comments: None received. *Decision:* Approved. No instrument of equivalent scientific value to the foreign instrument, for such purposes as these instruments are intended to be used, was being manufactured in the United States at the time the instruments were ordered. *Reasons:* Each foreign instrument is a conventional transmission electron microscope (CTEM) and is intended for research or scientific educational uses requiring a CTEM. We know of no CTEM, or any other instrument suited to these purposes, which was being manufactured in the United States either at the time of order of each instrument or at the time of receipt of application by the U.S. Customs Service.

Frank W. Creel

Director, Statutory Import Programs Staff

[FR Doc. 95–17768 Filed 7–18–95; 8:45 am]

BILLING CODE 3510–DS–F

Applications for Duty-Free Entry of Scientific Instruments

Pursuant to Section 6(c) of the Educational, Scientific and Cultural Materials Importation Act of 1966 (Pub. L. 89–651; 80 Stat. 897; 15 CFR part 301), we invite comments on the question of whether instruments of equivalent scientific value, for the purposes for which the instruments shown below are intended to be used, are being manufactured in the United States.

Comments must comply with 15 CFR 301.5(a)(3) and (4) of the regulations and be filed within 20 days with the Statutory Import Programs Staff, U.S. Department of Commerce, Washington, D.C. 20230. Applications may be examined between 8:30 A.M. and 5:00 P.M. in Room 4211, U.S. Department of Commerce, 14th Street and Constitution Avenue, N.W., Washington, D.C.

Docket Number: 95–051. *Applicant:* National Renewable Energy Laboratory, 1617 Cole Blvd., Golden, CO 80401. *Instrument:* Sonic Anemometer/Thermometer. *Manufacturer:* Kaijo Denki, Co. Inc., Ltd., Japan. *Intended Use:* The instrument will be used to study the 3-D structure of small-scale atmospheric turbulence related to the operation, efficiency, and fatigue life of wind turbine generators and their component parts. *Application Accepted by Commissioner of Customs:* June 23, 1995.

Docket Number: 95–052. *Applicant:* Dartmouth College, Department of Earth Sciences, 6105 Fairchild Science Center, North College Street, Hanover, NH 03755-3571. *Instrument:* ICP Mass Spectrometer, Model ELEMENT. *Manufacturer:* Finnigan MAT, Germany. *Intended Use:* The instrument will be used to measure elemental concentrations and isotope ratios of all elements in geological and environmental samples in support of a wide range of research projects undertaken by the faculty and students. *Application Accepted by Commissioner of Customs:* June 27, 1995.

Docket Number: 95–053. *Applicant:* Georgia Institute of Technology, 225 North Avenue, NW, Atlanta, GA 30332. *Instrument:* Electron Microscope, Model HF-2000. *Manufacturer:* Hitachi Instruments, Japan. *Intended Use:* The instrument will be used in research programs in virtually all areas of materials research including but not limited to the following:

(1) Ceramic composites,

(2) Fabrication of advanced ceramic materials,

(3) Electronic interconnect technology and materials,

(4) Specialized properties of coatings and thin films,

(5) Ion engine cathode structure characterization,

(6) Semiconductor heterostructures,

(7) Zeolite/catalyst development, and

(8) Study of epitaxial oxide heterostructures: Growth structure and phase transition.

In addition, the instrument will be used in teaching formal courses in electron microscopy. *Application Accepted by Commissioner of Customs:* June 27, 1995.

Frank W. Creel

Director, Statutory Import Programs Staff

[FR Doc. 95–17770 Filed 7–18–95; 8:45 am]

BILLING CODE 3510–DS–F

University of Minnesota, Notice of Decision on Application for Duty-Free Entry of Scientific Instrument

This decision is made pursuant to Section 6(c) of the Educational, Scientific, and Cultural Materials Importation Act of 1966 (Pub. L. 89–651, 80 Stat. 897; 15 CFR part 301). Related records can be viewed between 8:30 A.M. and 5:00 P.M. in Room 4211, U.S. Department of Commerce, 14th and Constitution Avenue, N.W., Washington, D.C.

Docket Number: 95–029. *Applicant:* University of Minnesota, Minneapolis, MN 55455. *Instrument:* Gyratory Compactor. *Manufacturer:* Invelop Oy, Finland. *Intended Use:* See notice at 60 FR 24838, May 10, 1995.

Comments: None received. *Decision:* Approved. No instrument of equivalent scientific value to the foreign instrument, for such purposes as it is intended to be used, is being manufactured in the United States. *Reasons:* The foreign instrument provides: (1) mold capacity of both 100 and 150 mm, (2) gyration speed from 15 to 80 cycles per minute, (3) a variable gyration angle from 0 to 3 degrees and (4) recording of shear resistance. The Federal Highway Administration advised June 12, 1995 that (1) these capabilities are pertinent to the applicant's intended purpose and (2) it knows of no domestic instrument or apparatus of equivalent scientific value

to the foreign instrument for the applicant's intended use.

We know of no other instrument or apparatus of equivalent scientific value to the foreign instrument which is being manufactured in the United States.

Frank W. Creel

Director, Statutory Import Programs Staff.

[FR Doc. 95–17769 Filed 7–18–95; 8:45 am]

BILLING CODE 3510–DS–F

National Oceanic and Atmospheric Administration

[I.D. 071095G]

Endangered Species; Permits

AGENCY: National Marine Fisheries Service (NMFS), National Oceanic and Atmospheric Administration (NOAA), Commerce.

ACTION: Issuance of modification 3 to permit 847 (P211E), modification 6 to permit 795 (P503A), modification 1 to permit 921 (P503P), and denial of modifications to permits 919 (P503N) and 922 (P503Q).

SUMMARY: Notice is hereby given that NMFS has issued three modifications to permits authorizing takes of listed species for the purpose of scientific research and enhancement, subject to certain conditions set forth therein, to the Oregon Department of Fish and Wildlife (ODFW) and the Idaho Department of Fish and Game (IDFG) and has denied two permit modification requests from IDFG.

ADDRESSES: The applications and related documents are available for review in the following offices, by appointment:

Office of Protected Resources, F/PR8, NMFS, 1315 East-West Highway, Silver Spring, MD 20910–3226 (301–713–1401); and

Environmental and Technical Services Division, F/NWO3, NMFS, 525 NE Oregon Street, Portland, OR 97232–4169 (503–230–5400).

SUPPLEMENTARY INFORMATION: Modification 3 to permit 847, modification 6 to permit 795, and modification 1 to permit 921 were issued under the authority of section 10 of the Endangered Species Act of 1973 (ESA) (16 U.S.C. 1531–1543) and the NMFS regulations governing listed fish and wildlife permits (50 CFR parts 217–222).

Notice was published on May 4, 1995 (60 FR 22051) that an application had been filed by ODFW (P211E) for modification 3 to permit 847. Permit 847, issued on May 28, 1993, authorizes a take of listed Snake River spring/summer chinook salmon (*Oncorhynchus tshawytscha*) associated with supplementation programs at the Imnaha River and Lookingglass Creek Hatcheries. For modification 3, ODFW requested authorization to retain all of the adult listed salmon that return to the adult trap for broodstock in 1995 if the forecasted runsize of returning adults is less than 100. If the forecasted runsize of returning adults is greater than or equal to 100 in 1995, ODFW proposed to release 20 percent of the returning adult listed salmon above the adult trap for natural spawning, with no restriction on the percentage of hatchery-origin fish to be released.

Modification 3 to permit 847 was issued on June 29, 1995 and is valid in 1995 only. Permit 847 expires on March 31, 1998.

Notice was published on April 5, 1995 (60 FR 17316) that an application had been filed by IDFG (P503A) for modification 6 to permit 795. Permit 795, issued on July 29, 1992, authorizes a take of listed species associated with scientific research and enhancement activities, including a captive broodstock program, with endangered Snake River sockeye salmon (*Oncorhynchus nerka*). For modification 6, IDFG requested authorization to: (1) Release broodyear (BY) 1994 juvenile, listed, artificially-propagated, Snake River sockeye salmon, progeny of listed adults, directly into Redfish Lake in July, into net pens in Redfish Lake in July and then directly into the lake from the net pens in the fall, and directly into the lake in October; (2) release BY 1994 juvenile sockeye progeny of listed adults directly into Pettit Lake in June, 1995; and (3) modify a condition in the permit requiring that an auxiliary water supply must accompany any vehicle used to transport listed sockeye salmon to pertain to the transport of listed adults only.

Following a discussion with NMFS, IDFG agreed to modify the release schedule of listed sockeye salmon juveniles into Pettit Lake in 1995 by carrying out the releases approximately 3 weeks after the last rainbow trout have been stocked in the lake. This modified release schedule for Pettit Lake in 1995 will serve to minimize any potential adverse impacts to the listed fish due to interactions with trout.

Modification 6 to permit 795 was issued on June 23, 1995. The juvenile, listed, sockeye salmon releases are authorized in 1995 only. The modified permit condition is valid for the duration of the permit. Permit 795 expires on July 31, 1997.

Notice was published on May 4, 1995 (60 FR 22051) that an application had been filed by IDFG (P503P) for modification 1 to permit 921. Permit 921, issued on June 16, 1994, authorizes a take of listed Snake River spring/summer chinook salmon (*Oncorhynchus tshawytscha*) associated with a supplementation program at McCall Hatchery. For modification 1, IDFG requested authorization to retain adult, listed, naturally-produced salmon that return to the adult trap for broodstock without any restrictions due to the annual forecasted runsize of returning adults. IDFG also requested authorization to release non-listed, hatchery-origin adults above the adult trap at Stolle Meadows, if necessary, to meet the minimum target of 35 adult pairs to be released annually for natural spawning.

Modification 1 to permit 921 was issued on June 30, 1995 and is valid for the duration of the permit. Permit 921 expires on December 31, 1998.

Notice was published on May 4, 1995 (60 FR 22051) that applications had been filed by IDFG for modifications to permits 919 (P503N, Sawtooth Hatchery) and 922 (P503Q, Pahsimeroi Hatchery), similar to the modification request of permit 921 described above. NMFS has denied these two permit modification requests because of the lack of a demonstrated adult-to-adult survival benefit from the rearing at these hatcheries. In addition, the take of adult listed fish for broodstock from these two watersheds may adversely impact the demographics of the naturally-spawning adults. Permits 919 and 922, and the respective takes of listed species authorized therein, will continue to be valid as written. Permits 919 and 922 expire on December 31, 1998.

Issuance of these modifications, as required by the ESA, was based on a finding that such modifications: (1) Were applied for in good faith, (2) will not operate to the disadvantage of the listed species that are the subject of the permits, and (3) are consistent with the purposes and policies set forth in section 2 of the ESA and the NMFS regulations governing listed species permits.

Dated: July 12, 1995.

Robert C. Ziobro,

Acting Chief, Endangered Species Division, Office of Protected Resources, National Marine Fisheries Service.

[FR Doc. 95–17691 Filed 7–18–95; 8:45 am]

BILLING CODE 3510–22–F

[I.D. 071395B]

Endangered Species; Permits

AGENCY: National Marine Fisheries Service (NMFS), National Oceanic and Atmospheric Administration (NOAA), Commerce.

ACTION: Issuance of modification 1 to permit 907 and modification 2 to permit 849.

SUMMARY: Notice is hereby given that NMFS issued Modification 1 to Permit 907 to David Bennett of the University of Idaho (P498A), and Modification 2 to Permit 849 to the Shoshone-Bannock Tribes (P510), to take listed Snake River salmon for the purpose of scientific research, subject to certain conditions set forth therein.

ADDRESSES: The applications, permits, and related documents are available for review by appointment in the following offices:

Office of Protected Resources, F/PR8, NMFS, 1315 East-West Hwy., Room 13307, Silver Spring, MD 20910–3226 (301–713–1401); and

Environmental and Technical Services Division, 525 NE Oregon Street, Suite 500, Portland, OR 97232–4169 (503–230–5400).

SUPPLEMENTARY INFORMATION: Notice was published on May 9, 1995 (60 FR 24616) that an application had been filed by David Bennett of the University of Idaho (P498A), to take listed Snake River Salmon at the Cargill Grain Elevator Site, Snake River, to evaluate the area's importance in rearing juveniles. The applicant proposed to capture 5 juvenile sockeye salmon, 15 juvenile spring/summer chinook salmon, and 50 juvenile fall chinook salmon, to be anesthetized, measured, and released. On July 6, 1995, NMFS issued Modification 1 to Permit 907, authorizing the above research.

On July 5, 1995, NMFS issued Modification 2 to Permit 849 to the Shoshone-Bannock Tribes (P510), authorizing the use of seines to capture listed salmon in the Salmon River Subbasin, and to cooperate with the Idaho Department of Fish & Game in salvage operations.

Issuance of these modifications, as required by the Endangered Species Act of 1973 (ESA) (16 U.S.C. 1531–1543), was based on a finding that such modifications: (1) Were applied for in good faith, (2) will not operate to the disadvantage of the listed species that are the subject of the modifications, and (3) are consistent with the purposes and policies set forth in section 2 of the ESA. These modifications were also issued in accordance with and are subject to the ESA and NMFS regulations governing listed fish and wildlife permits (50 CFR parts 217–222).

Dated: July 13, 1995.

Robert C. Ziobro,

Acting Chief, Endangered Species Division, Office of Protected Resources, National Marine Fisheries Service.

[FR Doc. 95–17683 Filed 7–18–95; 8:45 am]

BILLING CODE 3510–22–F

[I.D.071095I]

Marine Mammals and Endangered Species; Permits

AGENCY: National Marine Fisheries Service (NMFS), National Oceanic and Atmospheric Administration (NOAA), Commerce.

ACTION: Issuance of scientific research permit no. 967 (P771#73).

SUMMARY: Notice is hereby given that the National Marine Mammal Laboratory, Alaska Fisheries Science Center, National Marine Fisheries Service, 7600 Sand Pt. Way NE, Bin C15700, Seattle, WA 98115–0070, has been issued a permit to take marine mammals for purposes of scientific research.

ADDRESSES: The permit and related documents are available for review upon written request or by appointment, in the following offices:

Permits Division, Office of Protected Resources, NMFS, 1315 East-West Highway, Room 13130, Silver Spring, MD 20910 (301/713–2289); and

Northwest Region, NMFS, 7600 Sand Point Way, NE, Bin C15700, Building 1, Seattle WA 98115–0070 (206/526–6150).

SUPPLEMENTARY INFORMATION: On May 11, 1995, notice was published in the **Federal Register** (60 FR 25203) that a request for a scientific research permit to satellite or radio tag wild or captive rehabilitated harbor porpoise (*Phocoena phocoena*), and captive rehabilitated Dall's porpoise (*Phocoenoides dalli*) or Pacific white-sided dolphins (*Lagenorhynchus obliquidens*), had been submitted by the above-named organization. The requested permit has been issued under the authority of the Marine Mammal Protection Act of 1972, as amended (16 U.S.C. 1361 *et seq.*), and the Regulations Governing the Taking and Importing of Marine Mammals (50 CFR part 216).

Dated: July 11, 1995.

Eugene T. Nitta,

Acting Chief, Permits and Documentation Division, Office of Protected Resources, National Marine Fisheries Service.

[FR Doc. 95–17689 Filed 7–18–95; 8:45 am]

BILLING CODE 3510–22–F

[I.D. 071195C]

Marine Mammals

AGENCY: National Marine Fisheries Service (NMFS), National Oceanic and Atmospheric Administration (NOAA), Commerce.

ACTION: Issuance of modification to scientific research permit no. 927 (P79I).

SUMMARY: Notice is hereby given that Institute of Marine Science, University of California, Santa Cruz, CA 95064 (Principal Investigators: Daniel P. Costa, Ph.D. and Michael E. Goebel) has been issued a permit modification to increase the number of Northern fur seals (*Callorhinus ursinus*) to be captured, tagged, sampled, marked and released from 220 to 720 for scientific purposes.

ADDRESSES: The permit and related documents are available for review upon written request or by appointment, in the following office(s):

Permits Division, Office of Protected Resources, National Marine Fisheries Service, 1315 East-West Highway, Room 13130, Silver Spring, MD 20910 (301/713–2289);

Southwest Region, NMFS, 501 W. Ocean Blvd., Long Beach, CA 90802–4213 (531/980–4016); and

Alaska Region, NMFS, P.O. BOX 21668, Juneau, AK 99802 (907/586–7221).

SUPPLEMENTARY INFORMATION: On May 31, 1995, notice was published in the **Federal Register** (60 FR 28390) that a request to modify scientific research permit no. 927 been submitted by the above-named organization. The requested modification has been issued under the authority of the Marine Mammal Protection Act of 1972, as amended (16 U.S.C. 1361 *et seq.*), the Regulations Governing the Taking and Importing of Marine Mammals (50 CFR part 216), the Fur Seal Act of 1966, as amended (16 U.S.C. 1151 *et seq.*), and fur seal regulations at 50 CFR part 215.

Dated: July 12, 1995.

Eugene T. Nitta,

Acting Chief, Permit and Documentation Division, Office of Protected Resources, National Marine Fisheries Service.

[FR Doc. 95–17692 Filed 7–18–95; 8:45 am]

BILLING CODE 3510–22–F

[I.D. 071295A]

Marine Mammals

AGENCY: National Marine Fisheries Service (NMFS), National Oceanic and Atmospheric Administration (NOAA), Commerce.

ACTION: Receipt of application for a scientific research permit (P592).

SUMMARY: Notice is hereby given that the Children's Museum, Canadian Museum of Civilization, 100 Laurier Street, Hull, Quebec J8X 4H2 Canada, has applied in due form for a scientific research permit to import handicraft artifacts made from marine mammal parts and part of a travelling exhibit produced by the museum.

DATES: Written data or views, or requests for a public hearing on this request, should be submitted to the Director, Office of Protected Resources at the above address on or before [*insert date 30 days after date of publication in the Federal Register*]. Those individuals requesting a hearing should set forth the specific reasons why a hearing on this particular request would be appropriate.

ADDRESSES: The application is available for review upon written request or by appointment in the following office(s):

Permits Division, F/PR1, Office of Protected Resources, NMFS, 1315 East-West Highway, Room 13130, Silver Spring, MD 20910 (301/713–2289);

Director, Southeast Region, NMFS, NOAA, 9731 Executive Center Drive North, St. Petersburg, FL 33702 (813/570–5301);

Director, Northeast Region, NMFS, NOAA, One Blackburn Drive, Gloucester, MA 01930 (508/281–9250); and

Director, Northwest Region, NMFS, NOAA, 7600 Sand Point Way, NE, BIN C15700, Seattle, WA 98115 (206/526–6150).

FOR FURTHER INFORMATION CONTACT: Ann Hochman, 301/713–2289.

SUPPLEMENTARY INFORMATION: Concurrent with the publication of this notice in the **Federal Register**, the Secretary of Commerce is forwarding copies of this application to the Marine Mammal Commission and its Committee of Scientific Advisors. The subject permit is requested under the authority of the Marine Mammal Protection Act of 1972, as amended (16 U.S.C. 1361 *et seq.*), and the Regulations Governing the Taking and Importing of Marine Mammals (50 CFR part 216).

The applicant requests permission to export 24 artifacts for participation in an educational exhibit ''Siqiniq: Under the Same Sun'' for display at seven U.S. children's museums beginning in July 1995. At the conclusion of the tour in October 1997, the artifacts will return to Canada. The items are made all or in part from the Harp seal (*Phoca groenlandica*) that were legally harvested in the Baffin Region of the Northwest Territories, Canada, within the last 5 years. The purpose for this exhibit is to increase the understanding and appreciation among children of the culture and natural environment of the native people of Arctic Canada, particularly the use of natural materials in their daily diet and lifesyle.

Dated: July 12, 1995.

Eugene T. Nitta,

Acting Chief, Division of Permits and Documentation, Office of Protected Resources, National Marine Fisheries Service.

[FR Doc. 95–17690 Filed 7–18–95; 8:45 am]

BILLING CODE 3510–22–F

[I.D.071295B]

Marine Mammals

AGENCY: National Marine Fisheries Service (NMFS), National Oceanic and Atmospheric Administration (NOAA), Commerce.

ACTION: Modification no. 1 to scientific research permit no. 917 (P774#2).

SUMMARY: Notice is hereby given that a request for modification of scientific research permit no. 917 submitted by Northeast Fisheries Science Center, NMFS, 166 Water Street, Woods Hole, MA, 02543–1026, has been granted.

ADDRESSES: The modified permit is available for review by interested persons in the following offices by appointment:

Permits Division, Office of Protected Resources, NMFS, 1315 East-West Highway, Room 13130, Silver Spring, MD 20910 (301/713–2289); and

Director, Northeast Region, NMFS, One Blackburn Drive, Gloucester, MA 01930–2298 (508/281–9150).

SUPPLEMENTARY INFORMATION: On May 25, 1995, notice was published in the **Federal Register** (60 FR 27723) that a modification of permit no. 917, issued May 11, 1994 (59 FR 25891) had been requested by the above-named applicant. The requested modification has been granted under the authority of the Marine Mammal Protection Act of 1972, as amended (16 U.S.C. 1361 *et seq.*), the provisions of §§ 216.33(d) and (e) of the Regulations Governing the Taking and Importing of Marine Mammals (50 CFR part 216), the Endangered Species Act of 1973 (ESA), as amended (16 U.S.C. 1531 *et seq.*), and the provisions of § 222.25 of the Regulations Governing the Taking, Importing, and Exporting of Endangered Species (50 CFR part 222).

The modification authorized the holder to take a maximum of 50 biopsy samples, given 150 attempts from sei whales (*Balaenoptera borealis*) annually during research surveys off the northeast U.S. coast for the duration of the permit which expires on June 30, 1999. All samples will be exported to the genetics lab at the University of Copenhagen, Denmark for analysis.

Issuance of this modification, as required by the ESA, was based on a finding that such permit: (1) Was applied for in good faith; (2) will not operate to the disadvantage of the endangered species which is the subject of this permit; and (3) is consistent with the purposes and policies set forth in section 2 of the ESA.

Dated: July 12, 1995.

Eugene T. Nitta,

Acting Chief, Permits & Documentation Division, Office of Protected Resources, National Marine Fisheries Service.

[FR Doc. 95–17688 Filed 7–18–95; 8:45 am]

BILLING CODE 3510–22–F

DEPARTMENT OF DEFENSE

Office of the Secretary of Defense

Department of Defense Wage Committee; Notice of Closed Meetings

Pursuant to the provisions of section 10 of Public Law 92–463, the Federal Advisory Committee Act, notice is hereby given that closed meetings of the Department of Defense Wage Committee will be held on August 1, 1995; August 8, 1995; August 15, 1995; August 22, 1995; and August 29, 1995, at 10:00 a.m. in Room 800, Hoffman Building #1, Alexandria, Virginia.

Under the provisions of section 10(d) of Public Law 92–463, the Department of Defense has determined that the meetings meet the criteria to close meetings to the public because the matters to be considered are related to internal rules and practices of the Department of Defense and the detailed wage data considered were obtained from officials of private establishments with a guarantee that the data will be held in confidence.

However, members of the public who may wish to do so are invited to submit material in writing to the chairman concerning matters believed to be deserving of the Committee's attention.

Additional information concerning the meetings may be obtained by writing to the Chairman, Department of Defense Wage Committee, 4000 Defense Pentagon, Washington, DC 20301–4000.

Dated: July 13, 1995.

L. M. Bynum,

Alternate OSD Federal Register Liaison Officer Department of Defense.

[FR Doc. 95–17645 Filed 7–18–95; 8:45 am]

BILLING CODE 5000–04–M

Defense Nuclear Agency (DNA); Membership of the Defense Nuclear Agency Performance Review Board

AGENCY: Defense Nuclear Agency, Department of Defense.

ACTION: Notice of membership of the Defense Nuclear Agency Performance Review Board.

SUMMARY: This notice announces the appointment of the members of the Performance Review Board (PRB) of the Defense Nuclear Agency. The publication of PRB membership is required by 5 U.S.C. 4314(c)(4). The Performance Review Board shall provide fair and impartial review of Senior Executive Service performance appraisals and make recommendations regarding performance and performance awards to the Director, Defense Nuclear Agency.

EFFECTIVE DATE: The effective date of service for the appointees of the DNA PRB is on or about 2 August 1995.

FOR FURTHER INFORMATION CONTACT: D. DIAL–ALFRED, Workforce Effectiveness Branch (CVWE), Defense Nuclear Agency, Washington, DC 20305–1000, (703) 325–1106.

SUPPLEMENTARY INFORMATION: The names and titles of the members of the DNA PRB are set forth below. All are DNA officials unless otherwise identified:

Dr. George W. Ullrich, Deputy Director
Dr. Don A. Linger, Director for Test
Mr. Robert L. Brittigan, General Counsel
Ms. Juanita W. Smith, Associate Director (Personnel Programs), Defense Logistics Agency
Dr. Jeremy M. Kaplan, Deputy Director, C4I Integration Support Activity, Ballistic Missile Defense Organization

The following DNA officials will serve as alternate members of the DNA PRB, as appropriate.

Dr. Paul H. Carew, Director Information Management
Mr. Frederick S. Celec, Deputy Director for Operations
Mr. Michael K. Evenson, Assistant Director for Arms Control
Mr. David G. Freeman, Director, Acquisition Management Office
Dr. Kent L. Goering, Chief, Structural Dynamics Division
Mr. Richard L. Gullickson, Chief, Environments and Modeling Division
Mr. Clifton B. McFarland, Jr., Director for Shock Physics
Mrs. Joan Ma Pierre, Director for Radiation Sciences
Dr. Michael J. Shore, Director for Technology Applications
Mr. Robert C. Webb, Chief, Electronics and Systems Technology Division
Dr. Leon A. Wittwer, Chief, Weapons Effects Division

Dated: July 13, 1995.

L.M. Bynum,

Alternate OSD Federal Register Liaison Officer, Department of Defense.

[FR Doc. 95–17646 Filed 7–18–95; 8:45 am]

BILLING CODE 5000–04–M

Department of the Army

Availability for Non-Exclusive, Partially Exclusive or Exclusive Licensing of U.S. Patent Application Concerning Japanese Encephalitis cDNA Clones and Vaccines

AGENCY: U.S. Army Medical Research and Materiel Command, DOD.

ACTION: Notice of availability.

SUMMARY: In accordance with 37 CFR 404.6, announcement is made of the availability for non-exclusive, partially exclusive or exclusive licensing of U.S. Patent Application Serial No. 08/438,702 entitled ''Infectious Japanese encephalitis virus cDNA clones that produce highly attenuated recombinant Japanese encephalitis virus, and vaccines thereof'' and filed May 11, 1995. This patent has been assigned to the United States Government as represented by the Secretary of the Army.

ADDRESSES: Commander, U.S. Army Medical Research and Materiel Command, ATTN: Staff Judge Advocate, Fort Detrick, Frederick, Maryland 21702–5012.

FOR FURTHER INFORMATION CONTACT: Mr. John F. Moran, Patent Attorney, (301) 619–2065 or telefax (301) 619–7714.

SUPPLEMENTARY INFORMATION: The invention relates to recombinant, attenuated Japanese encephalitis viruses that contain a single amino acid mutation in the envelop protein. In particular, the invention is directed to isolated DNA molecules encoding the genomes of such mutant Japanese encephalitis viruses. The invention is also directed to methods for preparing mutant Japanese encephalitis viruses from cultured animal cells. It also relates to pharmaceutical compositions for providing protection from virulent Japanese encephalitis viruses.

Gregory D. Showalter,

Army Federal Register Liaison Officer.

[FR Doc. 95–17661 Filed 7–17–95; 8:45 am]

BILLING CODE 3710–08–M

DEPARTMENT OF EDUCATION

Federal Pell Grant, Federal Perkins Loan, Federal Work-Study, Federal Supplemental Educational Opportunity Grant, Federal Family Education Loan, and William D. Ford Federal Direct Loan Programs; Revision of the Need Analysis Methodology for the 1996–97 Award Year

AGENCY: Department of Education.

ACTION: Revision of the Need Analysis Methodology for the 1996–97 Award Year—Correction.

On May 31, 1995, the Assistant Secretary for Postsecondary Education published in the **Federal Register** (60 FR 28454), a notice of revision of the need analysis methodology for the 1996–97 award year. This notice corrects the May 31 document as follows:

On Page 28454, column 3, at the end of line 7, ''3.0'' is corrected to read ''3.4''.

On Page 28457, item 4, is corrected as follows—

(1) The heading of the table title ''Independent Students and Independent Students—Continued'' is corrected to read ''Dependent Students.''

(2) In the corrected ''Dependent Students'' table, line 2, ''$3,409 to $10,300'' is corrected to read ''−$3,409 to $10,300''.

(3) In the table title ''Independent Students With Dependents Other Than A Spouse'', line 2, ''$3,409 to $10,300'' is corrected to read ''−$3,409 to $10,300''.

FOR FURTHER INFORMATION CONTACT: Ms. Edith Bell, Program Specialist, General Provisions Branch, Policy Development Division, U.S. Department of Education, 600 Independence Avenue SW., (Room 3053, ROB–3), Washington, DC 20202–5444. Telephone: (202) 708–7888. Individuals who use a telecommunications device for the deaf (TDD) may call the Federal Information Relay Service (FIRS) at 1–800–877–8339 between 8 a.m. and 8 p.m., Eastern time, Monday through Friday.

Dated: July 12, 1995.

David A. Longanecker,

Assistant Secretary for Postsecondary Education.

[FR Doc. 95–17675 Filed 7–18–95; 8:45 am]

BILLING CODE 4000–01–M

[CFDA Nos.: 84.062A, 84.299A, 84.299B]

Indian Education Discretionary Grant Programs—Demonstration Grants for Indian Children, Professional Development and Adult Education

AGENCY: Department of Education.

ACTION: Notice inviting applications for new awards for fiscal year (FY) 1995.

Purpose of Program: The purpose of each program is included in this notice under the programmatic information for each program.

Applications Available: July 19, 1995.

Deadline for Intergovernmental Review: September 29, 1995.

Deadline for Transmittal of Applications: August 17, 1995.

Applicable Regulations: (a) The Education Department General Administrative Regulations (EDGAR) in 34 CFR parts 74, 75, 77, 79, 80, 81, 82, 85, and 86; and (b) for the Professional Development Program, the payback provisions of 34 CFR §§ 263.1(b), 263.3, and 263.35–.37, as published in the **Federal Register** on June 27, 1995 (60 FR 33300).

Selection Criteria: In evaluating applications for grants under this program, the Secretary uses the Education Department General Administrative Regulations criteria in 34 CFR 75.210. These regulations provide that the Secretary may award up to 100 points for the selection criteria, including a reserved 15 points. For this competition, the Secretary distributes the 15 points to the ''Evaluation plan'' criterion (34 CFR 75.210(b)(6)) for a possible total of 20 points.

• 84.062A Adult Indian Education.

Purpose of Program: The purposes of this program are to (1) support planning, pilot, and demonstration projects designed to test and demonstrate the effectiveness of programs for improving employment and educational opportunities for Indian adults; (2) assist in the establishment and operation of programs designed to stimulate basic literacy opportunities for all nonliterate Indian adults and the provision of opportunities to all Indian adults to qualify for a secondary school diploma, or its recognized equivalent, in the shortest period of time feasible.

Eligible Applicants: Eligible applicants for this program are State and local educational agencies, and Indian tribes, organizations, or institutions.

Priority

In making grants under this program, the Secretary will award 10 additional points to applications submitted by Indian tribes, organizations, and institutions of higher education, and Indian educational agencies. An application from a consortium of eligible entities that meets the requirements of 34 CFR 75.127–.129 and includes an Indian tribe, organization, or institution of higher education, or an Indian educational agency shall be considered eligible to receive the 10 additional priority points.

Available Funds: $1,698,000.

Estimated Range of Awards: $65,000 to $225,000.

Estimated Average Size of Awards: $175,000.

Estimated Number of Awards: 10.

Project Period: Up to 60 months.

Program Authority: 20 U.S.C. 7851.

• 84.299A Demonstration Grants for Indian Children.

Purpose of Program: The purpose of this program is to provide financial assistance to projects to develop, test, and demonstrate the effectiveness of services and programs to improve the educational opportunities and achievement of preschool, elementary, and secondary Indian children, through activities such as—

(a) Innovative programs related to the educational needs of educationally deprived children;

(b) Educational services that are not available to such children in sufficient quantity or quality, including remedial instruction, to raise the achievement of Indian children in one or more of the core academic subjects of English, mathematics, science, foreign languages, art, history, and geography;

(c) Bilingual and bicultural programs and projects;

(d) Special health and nutrition services, and other related activities, that address the special health, social, and psychological problems of Indian children;

(e) Special compensatory and other programs and projects designed to assist and encourage Indian children to enter, remain in, or reenter school, and to increase the rate of secondary school graduation;

(f) Comprehensive guidance, counseling, and testing services;

(g) Early childhood and kindergarten programs, including family-based preschool programs that emphasize school readiness and parental skills, and the provision of services to Indian children with disabilities;

(h) Partnership projects between LEAs and institutions of higher education that allow secondary school students to enroll in courses at the postsecondary level to aid these students in the transition from secondary school to postsecondary education;

(i) Partnership projects between schools and local businesses for school-to-work transition programs designed to provide Indian youth with the knowledge and skills the youth need to make an effective transition from school to a first job in a high-skill, high-wage career;

(j) Programs designed to encourage and assist Indian students to work toward, and gain entrance into, an institution of higher education; or

(k) Other services that meet the purpose of this program.

Eligible Applicants: Eligible applicants for this program include a State educational agency, local educational agency, Indian tribe, Indian organization, federally supported elementary and secondary school for Indian students, Indian institution, including an Indian institution of higher education, or a consortium of such institutions that meet the requirements of 34 CFR 75.127–.129.

Priorities

(1) In making multiyear grants under this program, the Secretary will award 10 additional points to applications that present a plan for combining two or more of the activities described above over a period of more than one year.

(2) In making grants under this program, the Secretary will award 10 additional points to applications submitted by Indian tribes, organizations, and institutions of higher education, including a consortium of any of these entities with other eligible entities. An application from a consortium of eligible entities that meets the requirements of 34 CFR 75.127–.129 and includes an Indian tribe, organization, or institution of higher education shall be considered eligible to receive the 10 additional priority points.

Available Funds: $1,873,000.

Estimated Range of Awards: $75,000 to $225,000.

Estimated Average Size of Awards: $150,000.

Estimated Number of Awards: 12.

Project Period: Up to 60 months.

Program Authority: 20 U.S.C. 7831.

• 84.299B Professional Development.

Purpose of Program: The purposes of this program are to (1) increase the number of qualified Indian individuals in professions that serve Indian people; (2) provide training to qualified Indian

individuals to become teachers, administrators, teacher aides, social workers, and ancillary educational personnel; and (3) improve the skills of qualified Indian individuals who serve in the capacities described in (2). Activities may include, but are not limited to, continuing programs, symposia, workshops, conferences, and direct financial support.

Grants to training educational personnel may be for preservice or inservice training. For individuals who are being trained to enter any field other than education, the training received must be in a program resulting in a graduate degree.

Eligible Applicants: Eligible applicants for this program are institutions of higher education, including Indian institutions of higher education; State or local educational agencies, in consortium with institutions of higher education; and Indian tribes of organizations, in consortium with institutions of higher education. An application from a consortium of eligible entities must meet the requirements of 34 CFR 75.127–.129.

Priorities

(1) The Secretary will award 10 additional points to applications for programs that include only Indian individuals as training participants.

(2) The Secretary will award 10 additional points to applications submitted by Indian tribes, organizations, and institutions submitted by Indian tribes, organizations, and institutions of higher education. A consortium application of eligible entities that meets the requirements of 34 CFR 75.127–.129 and includes an Indian tribe, organization or institution of higher education shall be considered eligible to receive the 10 additional priority points.

Available Funds: $850,000.

Estimated Range of Awards: $75,000 to $275,000.

Estimated Average Size of Awards: $200,000.

Estimated Number of Awards: 5.

Project Period: Up to 60 months.

Fiscal Information: For the payment of stipends to project participants being trained, the Secretary expects to set the stipend maximum at $1000 per month for full-time students and $125 allowance per month per dependent during the academic year. The terms ''stipend,'' ''full-time student,'' and ''dependent allowance'' are defined in 34 CFR 263.3 as published in the **Federal Register** on June 27, 1995 (60 FR 33300).

Program Authority: 20 U.S.C. 7832.

For Applications or Information Contact: Cathie Martin, Office of Indian Education, U.S. Department of Education, 600 Independence Avenue, SW, Portals Building—Room 4300, Washington, DC 20202–6335. Telephone: (202) 260–3774 or 1–800–501–5795. Individuals who use a telecommunications device for the deaf (TDD) may call the Federal Information Relay Service (FIRS) at 1–800–877–8339 between 8 a.m. and 8 p.m., Eastern time, Monday, through Friday.

Information about the Department's funding opportunities, including copies of application notices for discretionary grant competitions, can be viewed on the Department's electronic bulletin board (ED board), telephone (202) 260–9950; or on the Internet Copher Server at GOPHER.ED.GOV (under Announcements, Bulletins, and Press Releases). However, the official application notice for a discretionary grant competition is the notice published in the **Fedeal Register.**

(Catalog of Federal Domestic Assistance Numbers: 84.062A Indian Education—Adult Education; 84:299A Indian Education—Special Programs, Demonstration Grants for Indian Children; and 84.299B Indian Education—Special Programs, Professional Development)

Dated: July 14, 1995.

Thomas W. Payzant,

Assistant Secretary, Elementary and Secondary Education.

[FR Doc. 95–17819 Filed 7–18–95; 8:45 am]

BILLING CODE 4000–01–M

DEPARTMENT OF ENERGY

Federal Energy Regulatory Commission

[Project No. 8632–013 Illinois]

City of Kankakee, IL; Notice of Availability of Environmental Assessment

July 13, 1995.

In accordance with the National Environmental Policy Act of 1969 and the Federal Energy Regulatory Commission's Regulations, 18 CFR Part 380 (Order No. 486, 52 FR 47910), the Office of Hydropower Licensing (OHL) reviewed the application for amendment for the Kankakee Hydroelectric Project. The application is a request for approval of an as-built exhibit G–1. The exhibit shows the as-built location of the transmission line. The license authorizes a 2.1 mile long, underground transmission line. As built, the project consists of 1.5 miles of underground transmission line and 0.9 mile of overhead transmission line, in the City of Kankakee, Illinois. The staff prepared an Environmental Assessment (EA) for the action. In the EA, staff concludes that approval of the licensee's amendment application would not constitute a major federal action significantly affecting the quality of the human environment.

Copies of the EA are available for review in the Reference and Information Center, Room 3308, of the Commission's offices at 941 North Capitol Street, N.E., Washington, DC 20426.

Lois D. Cashell,

Secretary.

[FR Doc. 95–17702 Filed 7–18–95; 8:45 am]

BILLING CODE 6717–01–M

[Project No. 372 California]

Southern California Edison Company; Notice of Intent to File an Application for a New License

July 13, 1995.

Take notice that Southern California Edison Company, the existing licensee for the Lower Tule River Hydroelectric Project No. 372, filed a timely notice of intent to file an application for a new license, pursuant to 18 CFR 16.6 of the Commission's Regulations. The original license for Project No. 372 was issued effective May 1, 1978, and expires June 14, 2000.

The project is located on the Middle Fork Tule River in Tulare County, California. The principal works of the Tule River Project include a rubble masonry diversion dam, 113 feet long and 5 feet high, and a concrete gravity diversion dam, 44 feet long and 15 feet high; 32,000 feet of connecting conduits; a small regulating reservoir; a 2,800-foot-long steel penstock; a powerhouse with an installed generating capacity of 2,520 Kw; a substation and transmission line; and appurtenant facilities.

Pursuant to 18 CFR 16.7, the licensee is required henceforth to make available certain information to the public. This information is available from the licensee at 2244 Walnut Grove Avenue, Rosemead, CA 91770, telephone (818) 302–8958.

Pursuant to 18 CFR 16.8, 16.9 and 16.10, each application for a new license and any competing license applications must be filed with the Commission at least 24 months prior to the expiration of the existing license. All applications for license for this project must be filed by June 14, 1998.

Lois D. Cashell,

Secretary.

[FR Doc. 95–17703 Filed 7–18–95; 8:45 am]

BILLING CODE 6717–01–M

[Docket No. RP95–344–001]

Algonquin Gas Transportation Company; Notice of Changes in FERC Gas Tariff

July 13, 1995.

Take notice that on July 11, 1995, Algonquin Gas Transmission Company (Algonquin), submitted for filing as part of its FERC Gas Tariff, Fourth Revised Volume No. 1, effective July 15, 1995, the following revised tariff sheet:

Sub Fifth Revised Sheet No. 705

Algonquin states that the purpose of this filing is to correct language that was revised erroneously in Algonquin's June 15, 1995, filing in this docket (June 15 Filing). This revision clarifies that the allocation, billing, and crediting provision relates to all transit costs relating to retained capacity.

The June 15 Filing is currently pending before the Commission.

Algonquin states that copies of its filing were mailed to all affected customers and interested State Commissions.

Any person desiring to protest said filing should file a protest with the Federal Energy Regulatory Commission, 825 North Capitol Street, N.E., Washington, D.C. 20426, in accordance with 385.211 of the Commission's Rules of Practice and Procedure. All such protests should be filed on or before July 20, 1995. Protests will be considered by the Commission in determining the appropriate action to be taken, but will not serve to make protestants parties to the proceeding. Copies of this filing are on file with the Commission and are available for public inspection in the Public Reference Room.

Lois D. Cashell,

Secretary.

[FR Doc. 95–17697 Filed 7–18–95; 8:45 am]

BILLING CODE 6717–01–M

[Docket No. RP95–386–000]

Black Marline Pipeline Company; Notice of Proposed Changes in FERC Gas Tariff

July 13, 1995

Take notice that on July 10, 1995, Black Marlin Pipeline Company (BMP), tendered for filing to become part of its FERC Gas Tariff, Third, Revised Volume No. 1, the following tariff sheets:

Third Revised Sheet No. 213
First Revised Sheet No. 213D

These tariff changes are proposed to become effective on July 10, 1995, the effective date of Order No. 577–A.

On April 4, 1995, the Commission issued a Final Rule in Docket No. RM95–5–000 (Order No. 577), ''Release of Firm Capacity on Interstate Natural Gas Pipelines,'' revising 284.243(h) of the Commission's Regulations pertaining to prearranged capacity releases by: (1) Extending to one (1) full calendar month the exception from posting and bidding requirements and exempting transactions at the maximum rate from posting and bidding requirements and (2) providing a twenty-eight (28) day hiatus maximum rate under the exemption cannot re-release that capacity to the same replacement shipper at less than the maximum rate. Subsequently, on June 8, 1995 the Commission issued an Order Granting Rehearing in Docket No. RM95–5–001 (Order No. 577–A), which revised the April 4 Order by Requiring that ''31 days be substituted for ''one calendar month''.

In the instant filing, BMP is complying with Order Nos. 577 and 577–A by revising the provisions applicable to Reallocation of Capacity as contained in Section 10 of the General Terms and Conditions of BMP's FERC Tariff.

Any person desiring to be heard or to protest said filing should file a motion to intervene or protest with the Federal Energy Regulatory Commission, 825 North Capitol Street, N.E., Washington, D.C. 20426 in accordance with Sections 385.211 and 385.214 of the Commission's Rules and Regulations. All such motions or protests should be filed on or before July 20, 1995. Protests will be considered by the Commission in determining the appropriate action to be taken, but will not serve to make protestants parties to the proceeding. Any person wishing to become a party must file a motion to intervene. Copies of this filing are on file with the Commission and are available for public inspection.

Lois D. Cashell,

Secretary.

[FR Doc. 95–17694 Filed 7–18–95; 8:45 am]

BILLING CODE 6717–01–M

[Docket No. RP95–128–001]

East Tennessee Natural Gas Company; Notice of Rate Filing

July 13, 1995.

Take notice that on July 11, 1995 East Tennessee Natural Gas Company (East Tennessee), filed a request for an extension of time in which to make any credits due from excess revenues received pursuant to its cash out mechanism. East Tennessee requests permission to make any credits no later than forty-five (45) days subsequent to its affiliate, and principle supplier, Tennessee Gas Pipeline Company (Tennessee) filing its amended first annual cash out report, which is anticipated to be January, 1996.

East Tennessee states that Section 7 of its LMS-MA Rate Schedule requires it to credit any revenues received pursuant to its cash out mechanism in excess of actual costs incurred, within ninety days after each anniversary of the implementation of restructured services. However, East Tennessee states that, due to the fact that Tennessee has not effected a final reconciliation of its cash out mechanism, East Tennessee does not currently have final, accurate information on which to base such credits. Without knowing what it will be charged by Tennessee, East Tennessee can not determine whether it must make any refunds or not. East Tennessee therefore requests an extension and agrees to make any credits found to be due no later than forty-five (45) days subsequent to Tennessee filing its amended cash out report.

Any person desiring to protest with reference to said filing should file a protest with the Federal Energy Regulatory Commission, 825 North Capitol Street, NE., Washington, DC 20426, in accordance with Section 211 of the Commission's Rules of Practice and Procedure, 18 CFR 385.211. All such protests should be filed on or before July 20, 1995. Protests will be considered by the Commission in determining the appropriate action to be taken, but will not serve to make protestants parties to this proceeding. Copies of this filing are on file and available for public inspection.

Lois D. Cashell,

Secretary.

[FR Doc. 95–17700 Filed 7–18–95; 8:45 am]

BILLING CODE 6717–01–M

[Docket No. RP95–385–000]

Mid Louisiana Gas Company; Notice of Compliance Filing

July 13, 1995.

Take notice that on July 10, 1995, Mid Louisiana Gas Company (Mid Louisiana) tendered for filing to become part of its FERC Gas Tariff, Third Revised Volume No. 1, Second Revised Sheet No. 97, with an effective date of July 10, 1995.

Mid Louisiana states that this tariff sheet revises Section 4 of the General Terms and Conditions of its tariff to conform with Order No. 577–A capacity release provisions by revising the

exception from the advance posting and bidding requirement applicable to released capacity to reflect a duration of thirty-one (31) days.

Pursuant to Section 154.51 of the Commission's Regulations, Mid Louisiana respectfully requests waiver of the notice requirement of Section 154.22 of said Regulations to permit the tendered tariff sheets to become effective July 10, 1995 as submitted.

Mid Louisiana states that copies of its filing were served upon its jurisdictional customers and appropriate state regulatory agencies.

Any person desiring to be heard or to protest said filing should file a motion to intervene or protest with the Federal Energy Regulatory Commission, 825 North Capitol Street, NE., Washington, DC 20426, in accordance with 18 CFR 385.214 and 385.211 of the Commission's Rules and Regulations. All such motions or protests should be filed on or before July 20, 1995. Protests will be considered by the Commission in determining the appropriate action to be taken, but will not serve to make protestants parties to the proceeding. Any person wishing to become a party must file a motion to intervene. Copies of this filing are on file with the Commission and are available for public inspection in the Public Reference Room.

Lois D. Cashell,

Secretary.

[FR Doc. 95–17695 Filed 7–18–95; 8:45 am]

BILLING CODE 6717–01–M

[Docket Nos. RP95–326–001; RP95–242–002]

Natural Gas Pipeline Company of America; Notice of Filing in Compliance

July 13, 1995.

Take notice that on July 11, 1995, Natural Gas Pipeline Company of America (Natural) tendered for filing to become part of its FERC Gas Tariff, Sixth Revised Volume No. 1, revised tariff sheets to become effective December 1, 1995.

Natural states that the purpose of the filing is to comply with the Commission's ''Order Accepting and Suspending Tariff Sheets, Subject to Refund and Conditions, Establishing Technical Conference, Establishing Hearing and Consolidating Proceedings'' issued June 26, 1995 at Docket Nos. RP95–326–000, et al. (Suspension Order).

Natural states that it has removed from its cost of service the costs associated with the Erick Field storage project as required by the Suspension Order. In addition, Natural states that, given the effective date under the Suspension Order, it also eliminated the transportation demand changes associated with the costs of the Western Gas Marketing Ltd. supply.

Natural states that the filing also includes additional detailed schedules and workpapers supporting the Operation and Maintenance expenses reflected in the cost of service as required by the Suspension Order. Natural states that the revised tariff sheets are not intended to represent Natural's motion rates and that it will file separately to move new rates into effect at the appropriate time.

Natural states that copies of the filing were mailed to interested state regulatory commissions and to all intervenors in Docket Nos. RP95–242–000 and RP95–326–000.

Any person desiring to protest said filing should file a protest with the Federal Energy Regulatory Commission, 825 North Capitol Street, N.E., Washington, D.C. 20426, in accordance with Section 385.211 of the Commission's Rules and Regulations. All such protests should be filed on or before July 20, 1995. Protests will be considered by the Commission in determining the appropriate action to be taken, but will not serve to make protestants parties to the proceeding. Copies of this filing are on file with the Commission and are available for public inspection in the Public reference Room.

Lois D. Cashell,

Secretary

[FR Doc. 95–17698 Filed 7–18–95; 8:45 am]

BILLING CODE 6717–01–M

[Docket No. RP95–145–003]

Northwest Pipeline Corporation; Notice of Proposed Changes in FERC Gas Tariff

July 13, 1995.

Take notice that on July 10, 1995, Northwest Pipeline Corporation (Northwest) tendered for filing and acceptance as part of its FERC Gas Tariff, Third Revised Volume No. 1, the following tariff sheets with a proposed effective date of June 26, 1995:

Substitute Fourth Revised Sheet No. 231
Substitute First Revised Sheet No. 231–A
Substitute Original Sheet No. 303
Substitute Original Sheet No. 303–A

Northwest states that the purpose of this filing is to comply with the directives of the Commission's June 23, 1995, Order in Docket No. RP95–145–002 wherein Northwest was directed to remove all references to sections of its tariff that deal with the volumization of penalty revenue credits and to submit revised tariff sheets to the Commission by July 10, 1995. Specifically, such volumization provisions must be eliminated from Sections 14.12(d)(ii) and 32.2 of Northwest's General Terms and Conditions.

The June 23, 1995, Order also directed Northwest to respond to the intervenors' concerns with proposed Section 32.1(e) of Northwest's tariff. Northwest states that in response to these concerns, Northwest is proposing changes to Section 32.1(e) which serve to more narrowly define the circumstances under which Northwest may choose to sell storage gas inventory. Northwest also states that it is providing a comprehensive explanation of why it is both inappropriate and unreasonable for Northwest to credit revenues from sales of its storage gas inventory to its customers.

Northwest states that a copy of this filing has been served upon Northwest's jurisdictional customers, upon all intervenors in Docket No. RP95–145–000 and upon interested state regulatory commissions.

Any person desiring to protest said filing should file a protest with the Federal Energy Regulatory Commission, 825 North Capitol Street, N.E., Washington, D.C. 20426, in accordance with Section 385.211 of the Commission's Rules of Practice and Procedure. All such protests should be filed on or before July 20, 1995. Protests will be considered by the Commission in determining the appropriate action to be taken, but will not serve to make protestants parties to the proceeding. Copies of this filing are on file with the Commission and are available for public inspection in the Public Reference Room.

Lois D. Cashell,

Secretary.

[FR Doc. 95–17699 Filed 7–18–95; 8:45 am]

BILLING CODE 6717–01–M

[Docket No. RP95–5–006]

Northwest Pipeline Corporation; Notice of Compliance Filing

July 13, 1995.

Take notice that on July 10, 1995, Northwest Pipeline Corporation (Northwest), tendered for filing as part of its FERC Gas Tariff, Third Revised Volume No. 1, the following tariff sheets

with a proposed effective date of November 6, 1994:

Third Substitute Original Sheet No. 237–A
Original Sheet No. 237–A.01

Northwest states that the purpose of this filing is to comply with the Commission's Orders Following Technical Conference, Accepting Tariff Sheets Subject to Modification, Granting Waiver, and Denying Rehearing as Moot (''Order'') issued on June 23, 1995 in Docket Nos. RP95–5–001, RP95–5–002, and RP95–5–004.

Northwest states that it has modified Section 15.6 of the General Terms and Conditions of its tariff to eliminate the language which allows volumization of penalty revenues for crediting to its firm Shippers as directed by the Commission.

Northwest further states that it has filed a Request for Rehearing on the Commission directive that Northwest adopt tariff language in Sections 15.7 and 15.11 that would toll the make-up period for Shipper Imbalances when Northwest is unable to accept a make-up nomination due to ''operational conditions.'' In its proposed context, the language is unworkable for Northwest's system.

Northwest states that a copy of this filing has been served upon all intervenors in Docket No. RP–95–5, Northwest's jurisdictional customers, and relevant state regulatory commissions.

Any person desiring to protest said filing should file a protest with the Federal Energy Regulatory Commission, 825 North Capitol Street, N.E., Washington, D.C. 20426, in accordance with Section 385.211 of the Commission's Rules of Practice and Procedure. All such protests should be filed on or before July 20, 1995. Protests will be considered by the Commission in determining the appropriate action to be taken, but will not serve to make protestants parties to the proceeding. Copies of this filing are on file with the Commission and are available for public inspection in the Public Reference Room.

Lois D. Cashell,

Secretary.

[FR Doc. 95–17701 Filed 7–18–95; 8:45 am]

BILLING CODE 6717–01–M

[Docket No. CP95–612–000]

Northwest Pipeline Corporation; Notice of Application

July 13, 1995.

Take notice that on July 12, 1995, Northwest Pipeline Corporation (Northwest), 295 Chipeta Way, Salt Lake City, Utah 84158, filed in Docket No. CP95–612–000, an application pursuant to Sections 7(c) and 7(b) of the Natural Gas Act and Part 157 of the Commission's Regulations for an order granting a certificate of public convenience and necessity for authorization to construct and operate certain replacement natural gas facilities and for authorization to abandon and remove the facilities being replaced, all as more fully set forth in the request which is on file with the Commission and open to public inspection.

Northwest proposes to (1) construct and operate approximately 2,620 feet each of new 26-inch and 30-inch replacement pipeline in new right-of-way; (2) remove and abandon approximately 470 feet each of existing 26-inch and 30-inch pipeline; and (3) abandon in-place approximately 1,580 feet each of existing 26-inch mainline and 30-inch loop line, all in Cowlitz County, Washington. Northwest states that the installation of replacement pipeline and the removal and abandonment of existing line is necessary to ensure the safety and integrity of its mainline transmission system by relocating Northwest's lines away from an area prone to landslides.

Northwest indicates that its planned construction window for the installation of replacement pipeline and the removal of the existing pipeline is from September 1 to October 20, 1995. Northwest maintains the project must be completed prior to the advent of the rainy season, which could possibly cause earth movement in the vicinity of Northwest's pipelines, placing stress on the pipelines, causing them to rupture. Northwest asserts that is plans to complete the proposed construction and place the replacement pipeline in service prior to the start of the 1995–96 winter heating season.

Northwest states that the proposed pipeline relocation and replacements will result in no increase in the capacity of its mainline transmission system.

Northwest estimates the total cost to construct the proposed replacement pipeline and abandon the existing pipeline segments at approximately $1,964,700.

Any person desiring to be heard or to make any protest with reference to said application should on or before July 21, 1995, file with the Federal Energy Regulatory Commission, Washington, D.C. 20426, a motion to intervene or a protest in accordance with the requirements of the Commission's Rules of Practice and Procedure (18 CFR 385.214 and 385.211) and the Regulations under the Natural Gas Act (18 CFR 157.10). All protests filed with the Commission will be considered by it in determining the appropriate action to be taken but will not serve to make the protestants parties to the proceeding. Any person wishing to become a party to a proceeding or to participate as a party in any hearing therein must file a motion to intervene in accordance with the Commission's Rules.

Take further notice that, pursuant to the authority contained in and subject to the jurisdiction conferred upon the Federal Energy Regulatory Commission by Sections 7 and 15 of the Natural Gas Act and the Commission's Rules of Practice and Procedure, a hearing will be held without further notice before the Commission or its designee on this application if no motion to intervene is filed within the time required herein, if the Commission on its own review of the matter finds that a grant of the certificate for the proposal is required by the public convenience and necessity. If a motion for leave to intervene is timely filed, or if the Commission on its own motion believes that formal hearing is required, further notice of such hearing will be duly given.

Under the procedure herein provided for, unless otherwise advised, it will be unnecessary for Northwest to appear or be represented at the hearing.

Lois D. Cashell,

Secretary.

[FR Doc. 95–17705 Filed 7–18–95; 8:45 am]

BILLING CODE 6717–01–M

[Docket Nos. ES95–33–002, ES95–33–003 and ES95–33–005]

Northwestern Public Service Company; Notice of Amended Application

July 13, 1995.

Take notice that on June 28, July 6, and July 11, 1995, Northwestern Public Service Company (Northwestern) filed amendments to its application in Docket Nos. ES95–33–000 *et al.*

By letter order dated June 19, 1995 (71 FERC ¶62,204), Northwestern was authorized, in Docket Nos. ES95–33–000 and ES95–33–001, over a two-year period:

(A) To issue the following permanent securities provided that the aggregate issuance amount does not exceed $300 million:

(i) Not more than two million shares of Common Stock, par value $3.50;

(ii) Not more than $75 million of Cumulative Preferred Stock;

(iii) Not more than $125 million of New Mortgage Bonds, notes, debentures, subordinated debentures (including securities in connection with a Monthly Income Preferred Securities financing),

guarantees or other evidences of indebtedness; and

(iv) Not more than $75 million of short-term debt securities; and

(B) To issue not more than $175 million of bridge financing notes, debentures, guarantees or other evidences of indebtedness, until the permanent financing in (A) is in place.

The original authorization contemplated that the proceeds from the sale of the securities authorized in Docket Nos. ES95–33–000 and ES95–33–001 would be used to complete an acquisition of a propane distribution business.

On June 28, 1995, Northwestern made a filing requesting that the authorization granted in Docket Nos. ES95–33–000 and ES95–33–001 be amended:

(A) To authorize, subject to the $300 million aggregate issuance amount of permanent securities, the issuance of:

(i) Not more than an additional one million shares of Common Stock, par value $3.50 per share; and

(ii) Not more than 200,000 shares of Northwestern's Preference Stock; and

(B) To increase the authorization to issue permanent securities by $47.5 million and the authorization to issue New Mortgage Bonds by $47.5 million.

Northwestern also requested that the amendment be exempted from the Commission's competitive bidding and negotiated placement requirements.

On July 6, 1995, Northwestern made a filing requesting that the authorization granted in Docket Nos. ES95–33–000 and ES95–33–001 be further amended to allow it to use the proceeds from the sale of the securities to complete other potential acquisitions as well as the propane company acquisition.

On July 11, 1995, Northwestern made a filing requesting that the authorization granted in Docket Nos. ES95–33–000 ES95–33–001 be further amended to authorize it:

(A) To issue the Preference Stock previously sought in the June 28, 1995 amendment in an amount not to exceed $20 million; and

(B) To reduce the additional authorization for the permanent securities and New Mortgage Bonds requested by the June 28, 1995 amendment by $22.5 million.

Any person desiring to be heard or to protest said filing should file a motion to intervene or protest with the Federal Energy Regulatory Commission, 825 North Capitol Street, NE., Washington, DC 20426 in accordance with Rules 211 an 214 of the Commission's Rules of Practice and Procedure (18 CFR 385.211 and 385.214). All such motions or protests should be filed on or before July 20, 1995. Protests will be considered by the Commission in determining the appropriate action to be taken, but will not serve to make the protestants parties to the proceeding.

Any person wishing to become a party must file a motion to intervene. Copies of this filing are on file with the Commission and are available for public inspection.

Lois D. Cashell,

Secretary.

[FR Doc. 95–17704 Filed 7–18–95; 8:45 am]

BILLING CODE 6717–01–M

[Docket No. TM95–4–49–001]

Williston Basin Interstate Pipeline Company; Notice of Compliance Filing

July 13, 1995.

Take notice that on July 10, 1995, Williston Basin Interstate Pipeline Company (Williston Basin), tendered for filing revised tariff sheets to Second Revised Volume No. 1 of its FERC Gas Tariff.

Williston Basin states that, in compliance with the Commission's June 30, 1995 Order, the revised tariff sheets reflect the continuation of the currently effective one-part volumetric rate structure and the volumetric GSR surcharge applicable to service under Rate Schedule ST–1. In addition, Williston Basin has revised the rate for Rate Schedule IT–1 based on a throughput level of 7,354,757 Dth.

Williston Basin has requested that the Commission accept this filing to become effective July 1, 1995.

Any person desiring to protest said filing should file a protest with the Federal Energy Regulatory Commission, 825 North Capitol Street, N.E., Washington, D.C. 20426, in accordance with Rule 211 of the Commission's Rules of Practice and Procedure (18 CFR 385.211). All such protests should be filed on or before July 20, 1995. Protests will be considered by the Commission in determining the appropriate action to be taken, but will not serve to make protestants parties to the proceeding. Copies of this filing are on file with the Commission and are available for public inspection.

Lois D. Cashell,

Secretary.

[FR Doc. 95–17693 Filed 7–18–95; 8:45 am]

BILLING CODE 6717–01–M

[Docket No. RP95–384–000]

Williston Basin Interstate Pipeline Company; Notice of Proposed Changes in FERC Gas Tariff

July 13, 1995.

Take notice that on July 10, 1995, Williston Basin Interstate Pipeline Company (Williston Basin), tendered for filing to become part of its FERC Gas Tariff, Second Revised Volume No. 1, Second Revised Sheet No. 256, with an effective date of July 10, 1995.

Williston Basin states that the revised tariff sheet revises Section 17 of the General Terms and Conditions of Williston Basin's FERC Gas Tariff, Second Revised Volume No. 1 to conform to the Commission's Order No. 577–A issued May 31, 1995 in Docket No. RM95–5–001.

Any person desiring to be heard or to protest said filing should file a motion to intervene or protest with the Federal Energy Regulatory Commission, 825 North Capitol Street, N.E., Washington, D.C. 20426, in accordance with Rules 211 and 214 of the Commission's Rules of Practice and Procedure (18 CFR 385.211 and 385.214). All such motions or protests should be filed on or before July 20, 1995. Protests will be considered by the Commission in determining the appropriate action to be taken, but will not serve to make protestants parties to the proceeding. Any person wishing to become a party to the proceeding must file a motion to intervene. Copies of this filing are on file with the Commission and are available for public inspection.

Lois D. Cashell,

Secretary.

[FR Doc. 95–17696 Filed 7–18–95; 8:45 am]

BILLING CODE 6717–01–M

ENVIRONMENTAL PROTECTION AGENCY

[OPP–180972; FRL–4957–6]

Emergency Exemptions

AGENCY: Environmental Protection Agency (EPA).

ACTION: Notice.

SUMMARY: EPA has granted specific exemptions for the control of various pests to the nine States listed below. These exemptions, issued during the month of March 1995, are subject to application and timing restrictions and reporting requirements designed to protect the environment to the maximum extent possible. EPA has denied a specific exemption request from the Missouri Department of

Agriculture, South Carolina Department of Fertilizer and Pesticide Control, and the Wisconsin Department of Agriculture, Trade, and Consumer Protection. Information on these restrictions is available from the contact persons in EPA listed below.

DATES: See each specific exemption for its effective date.

FOR FURTHER INFORMATION CONTACT: See each emergency exemption for the name of the contact person. The following information applies to all contact persons: By mail: Registration Division (7505W), Office of Pesticide Programs, Environmental Protection Agency, 401 M St., SW., Washington, DC 20460. Office location and telephone number: 6th Floor, CS #1, 2800 Jefferson Davis Highway, Arlington, VA, (703) 308–8417; e-mail: group.ermus@epamail.epa.gov.

SUPPLEMENTARY INFORMATION: EPA has granted specific exemptions to the:

1. California Environmental Protection Agency, Pesticide Regulation, for the use of cyfluthrin on navel oranges to control citrus thrips; March 31, 1995, to June 30, 1995. (Libby Pemberton)

2. California Environmental Protection Agency, Pesticide Regulation, for the use of maneb on walnuts to control bacterial blight; March 17, 1995, to December 15, 1995. (Margarita Collantes)

3. California Environmental Protection Agency, Pesticide Regulation, for the use of fenamiphos on broccoli and cauliflower to control nematodes; March 16, 1995, to March 15, 1996. California had initiated a crisis exemption for this use. (Libby Pemberton)

4. California Environmental Protection Agency for the use of methyl bromide on sweet potatoes to control nematodes (root rot); March 13, 1995, to March 12, 1996. (Libby Pemberton)

5. Florida Department of Agriculture and Consumer Services for the use of imidacloprid and avermectin on peppers to control thrips; March 20, 1995, to March 19, 1996. (David Deegan)

6. Florida Department of Agriculture and Consumer Services for the use of methyl bromide on watermelons to control nematodes, fungi, and weeds; March 13, 1995, to March 12, 1996. (Libby Pemberton)

7. New Mexico Department of Agriculture for the use of propazine on sorghum to control pigweed; March 3, 1995, to August 1, 1995. A notice of receipt published in the **Federal Register** of January 18, 1995 (60 FR 3640). The situation was determined to be urgent and nonroutine, and is expected to lead to significant economic losses for affected growers. (Andrea Beard)

8. Oklahoma Department of Agriculture for the use of propazine on sorghum to control pigweed; March 3, 1995, to August 1, 1995. A notice of receipt published in the **Federal Register** of January 18, 1995 (60 FR 3640). The situation was determined to be urgent and nonroutine, and is expected to lead to significant economic losses for affected growers. (Andrea Beard)

9. Oregon Department of Agriculture for the use of vinclozolin on snap beans to control white and gray mold; March 21, 1995, to September 30, 1995. (Libby Pemberton)

10. Oregon Department of Agriculture for the use of chlorothalonil and fenarimol on hazelnuts to control eastern filbert blight; March 20, 1995, to May 30, 1995. (David Deegan)

11. Pennsylvania Department of Agriculture for the use of vinclozolin on white and gray mold; March 21, 1995, to October 31, 1995. (Libby Pemberton)

12. Texas Department of Agriculture for the use of propazine on sorghum to control pigweed; March 3, 1995, to August 1, 1995. A notice of receipt published in the **Federal Register** of January 11, 1995 (60 FR 2749). The situation was determined to be urgent and nonroutine, and significant economic losses were expected without this use. (Andrea Beard)

13. Washington Department of Agriculture for the use of bifenthrin on raspberries to control weevils; March 9, 1995, to August 10, 1995. (David Deegan)

14. Washington Department of Agriculture for the use of chlopyrifos on grapes to control cutworms and grape mealybugs; March 20, 1995, to August 15, 1995. (David Deegan)

15. Wisconsin Department of Agriculture, Trade, and Consumer Protection for the use of vinclozolin on snap beans to control white and gray mold; March 21, 1995, to September 15, 1995. (Libby Pemberton)

EPA has denied specific exemption requests from the:

1. Missouri Department of Agriculture for the use of pyrithiobac-sodium on cotton to control morningglory, velvet leaf, and cocklebur. This specific exemption was denied because a statewide emergency condition does not exist. Fluometuron, the alternative herbicide of choice, should provide adequate control of these weeds, provided rainfall is sufficient to activate this herbicide. Additionally, clomazone, a second alternative, is less sensitive to rain activation and provides adequate control. While some growers may have severe problems, no change in historic trends has been demonstrated. Furthermore, recently submitted chronic toxicological and ecological data has not yet been reviewed by EPA. As a result, neither a complete ecological risk assessment, nor a dietary risk assessment can be conducted. Therefore, EPA was unable to make findings required for approval of an emergency exemption that the proposed use would not cause unreasonable adverse effects to man and the environment. (Margarita Collantes)

2. South Carolina Department of Fertilizer and Pesticide Control for the use of pyrithiobac-sodium on cotton to control pigweeds. This specific exemption was denied because a statewide emergency condition does not exist. In addition, the Agency was unable to make findings required for approval of an emergency exemption that the proposed use would not cause unreasonable adverse effects. Although the resistance of biotypes of pigweeds to trifluralin and other dinitroaniline herbicides is a nonroutine situation that could cause severe and possibly urgent problems for some growers, historical data from 1989 to 1993 indicate that on a statewide basis, growers are not expected to suffer significant economic loss. Furthermore, recently submitted chronic toxicological and ecological data has not yet been reviewed by EPA. As a result, neither a complete ecological risk assessment, nor a dietary risk assessment can be conducted. Therefore, EPA was unable to make findings required for approval of an emergency exemption that the proposed use would not cause unreasonable adverse effects to man and the environment. (Margarita Collantes)

3. Wisconsin Department of Agriculture, Trade, and Consumer Protection for the use of sethoxydim on red beets to control annual and perennial grasses. This specific exemption was denied because an emergency situation, as defined by the regulations, does not exist. Although the herbicide Antor was canceled in 1993, available information indicates that a similar or better level of control would be achieved with the use of the registered alternatives, cycloate and pyrazon. Therefore, the loss of Antor is not expected to lead to yields outside of the historical range. (Andrea Beard)

Authority: 7 U.S.C. 136.

List of Subjects

Environmental protection, Pesticides and pests, Crisis exemptions.

Dated: June 30, 1995.

Stephen L. Johnson,

Director, Registration Division, Office of Pesticide Programs.

[FR Doc. 95–17130 Filed 7–18–95; 8:45 am]

BILLING CODE 6560–50–F

[OPP–34079; FRL 4964–2]

Notice of Receipt of Requests for Amendments To Delete Uses in Certain Pesticide Registrations

AGENCY: Environmental Protection Agency (EPA).

ACTION: Notice.

SUMMARY: In accordance with section 6(f)(1) of the Federal Insecticide, Fungicide, and Rodenticide Act (FIFRA), as amended, EPA is issuing a notice of receipt of request for amendment by registrants to delete uses in certain pesticide registrations.

DATES: Unless a request is withdrawn, the Agency will approve these use deletions and the deletions will become effective on October 17, 1995.

FOR FURTHER INFORMATION CONTACT: By mail: James A. Hollins, Office of Pesticide Programs (7502C), Environmental Protection Agency, 401 M St., SW., Washington, DC 20460. Office location for commercial courier delivery and telephone number: Room 216, Crystal Mall No. 2, 1921 Jefferson Davis Highway, Arlington, VA, (703) 305–5761; e-mail: hollins.james@epamail.epa.gov.

SUPPLEMENTARY INFORMATION:

I. Introduction

Section 6(f)(1) of FIFRA, provides that a registrant of a pesticide product may at any time request that any of its pesticide registrations be amended to delete one or more uses. The Act further provides that, before acting on the request, EPA must publish a notice of receipt of any such request in the **Federal Register**. Thereafter, the Administrator may approve such a request.

II. Intent to Delete Uses

This notice announces receipt by the Agency of applications from registrants to delete uses in the 18 pesticide registrations listed in the following Table 1. These registrations are listed by registration number, product names and the specific uses deleted. Users of these products who desire continued use on crops or sites being deleted should contact the applicable registrant before October 17, 1995, to discuss withdrawal of the applications for amendment. This 90-day period will also permit interested members of the public to intercede with registrants prior to the Agency approval of the deletion.

TABLE 1. — REGISTRATIONS WITH REQUESTS FOR AMENDMENTS TO DELETE USES IN CERTAIN PESTICIDE REGISTRATIONS

EPA Reg No.	Product Name	Delete From Label
000264–00456	Ethoprop Technical (Ethoprop)	Use on soybeans & domestic turf
002393–00280	Hopkins Malathion 57% Emulsifiable Liquid Insecticide-B (Malathion)	Almonds, anise, apples, asparagus, carrots, cowpea hay, filberts, melons, peanuts, pears, pineapples, plums, prunes, pumpkins, quinces, raisins, safflower, soybeans, sugar beets, tobacco, watermelons, forestry, stored comnmodity treatment for almonds, peanuts, barley, corn, grain sorghum, oats, rice, rye, raisins, wheat, field & garden seeds, bagged citrus pulp, pet & domestic animal uses for dogs, cats, beef cattle, horses, sheep goats, hogs, chickens, ducks, geese, turkeys, animal premisuses for livestock barns, pet quarters, poultry houses, human mattresses, commercial & industrial uses for bagged flour & packaged cereals, wineries & dry milk processing plants
002935–00083	Malathion 8 Spray (Malathion)	Almonds, apples, pears, plums, prunes, quinces, asparagus, carrots, cranberries, strawberries, melons, dates, ULV on tomatoes, safflower, stored grains, sugar beets
007401–00010	Ferti-Lome Malathion Garden Spray (Malathion)	Dogs, cats, kennels, pens
007401–00058	Ferti-Lime Borer Killer (Malathion)	Plums, prunes, almonds
008329–00018	Mosquito mist two ULV (Chlorpyrifos)	Mosquito larvicide use
010370–00058	Ford's Malathion 57% EC (Malathion)	Indoor uses, animal uses, stored peanuts
010370–00291	50% Malathion Insect Spray (Malathion)	Indoor household use, dogs, cats
011746–00015	Davis Kill-A-Bug XI (Chlorpyrifos)	Mosquito adulticide & larvicide use
034704–00018	Clean Crop Malathion ULV Concentrate Insecticide (Malathion)	Safflower, soybeans, sugar beets, beef cattle feed lots & holding pens, forestry & tomatoes
034704–00065	Chlorpyrifos 2E (Chlorpyrifos)	Mosquito use
034704–00066	Chlorpyrifos 4E (Chlorpyrifos)	Mosquito control
034704–00423	Dursban 2 Coated Granules (Chlorpyrifos)	Mosquito use
034704–00203	Clean Crop Malathion ULV-91 (Malathion)	Flax, peas, safflower, soybeans, sugar beets, beef cattle feed lots & holding pens, tomatoes, forestry
034704–00305	Hopkins Lincoln Granules (Chlorpyrifos)	Mosquito use
034704–00413	Dursban 1 Coated Granules (Chlorpyrifos)	Mosquito use
034911–00002	Hi-Yield Malathion Insect Spray (Malathion)	Household, domestic dwellings
034911–00016	Hi-Yield Malathion Farm & Grain Spray (Malathion)	Peanuts, soybeans, tobacco, stored grain, stored peanuts, cattle, horses, sheep goats, hogs, poultry, grain & peanut storage bins

The following Table 2 includes the names and addresses of record for all registrants of the products in Table 1, in sequence by EPA company number.

TABLE 2. — REGISTRANTS REQUESTING AMENDMENTS TO DELETE USES IN CERTAIN PESTICIDE REGISTRATIONS

Company No.	Company Name and Address
000264	Rhone-Poulenc AG Co., 2 Alexander Drive, P.O. Box 12014, Research Triangle Park, NC 27709.
002393	Haco, Inc., P.O. Box 667, Greeley, CO 80632.
002935	Wilbur-Ellis Co., 191 W. Shaw Ave., Suite 107, Fresno, CA 93704.
007401	Voluntary Purchasing Groups, Inc., P.O. Box 460, Bonham, TX 75418.
008329	Clarke Mosquito Control Products, Inc., 159 N. Garden Ave., Roselle, IL 60172.
010370	Roussel Uclaf Corp., 95 Chestnut Ridge Road, Montvale, NJ 07645.
011746	Louisiana Chemical USA, Inc., c/o Reg West Company, P.O. Box 2220, Greeley CO 80632.
037404	Platte Chemical Co., P.O. Box 667, Greeley, CO 80632.
034911	Hi-Yield Chemical Co., P.O. Box 460, Bonham, TX 75418.

III. Existing Stocks Provisions

The Agency has authorized registrants to sell or distribute product under the previously approved labeling for a period of 18 months after approval of the revision, unless other restrictions have been imposed, as in special review actions.

List of Subjects

Environmental protection, Pesticides and pests, Product registrations.

Dated: June 20, 1995.

Frank Sanders,

Director, Program Management and Support Division.

[FR Doc. 95–17318 Filed 7–18–95; 8:45 am]

BILLING CODE 6560–50–F

FEDERAL RESERVE SYSTEM

Agency Forms Under Review

Background

Notice is hereby given of the final approval of proposed information collection(s) by the Board of Governors of the Federal Reserve System (Board) under OMB delegated authority, as per 5 C.F.R. 1320.9 (OMB Regulations on Controlling Paperwork Burdens on the Public).

FOR FURTHER INFORMATION CONTACT: Federal Reserve Board Clearance Officer—Mary M. McLaughlin—Division of Research and Statistics, Board of Governors of the Federal Reserve System, Washington, DC 20551 (202-452-3829).

OMB Desk Officer—Milo Sunderhauf—Office of Information and Regulatory Affairs, Office of Management and Budget, New Executive Office Building, Room 3208, Washington, DC 20503 (202-395-7340).

Final approval under OMB delegated authority of the extension, with revision of the following reports:

1. Report title: Registration Statement for Persons who Extend Credit Secured by Margin Stock, Deregistration Statement for Persons Registered Pursuant to Regulation G, and Annual Report
Agency form numbers: FR G-1, FR G-2, and FR G-4
OMB Docket number: 7100-0011
Effective Date: August 18, 1995
Frequency: On occasion
Reporters: Individuals and businesses
Annual reporting hours: 1,478
Estimated average hours per response: 1.90
Number of respondents: 778
Small businesses are affected.

General description of report: This information collection is mandatory (15 U.S.C. 78g). The FR G-1 and FR G-4 are given confidential treatment (5 U.S.C. 552(b)(4)). The FR G-2 does not request confidential information.

Abstract: Regulation G was adopted in response to concerns of the Federal Reserve and the Securities Exchange Commission that unregulated lenders were circumventing the margin requirements of Regulations T and U. These reports are event-generated and are filed with the appropriate Federal Reserve Bank. The revisions include a further breakdown of an existing item regarding employee stock option, purchase, and ownership plans on the FR G-1 and FR G-4, the addition of the registrant's telephone number to the FR G-2, and clarifications to the existing reporting instructions for the FR G-1 and FR G-4. The revisions are expected to have no appreciable effect on respondent burden for these reports.

Final approval under OMB delegated authority the extension, without revision, of the following reports:

1. Report title: Statement of Purpose for an Extension of Credit Secured by Margin Stock by a Person Subject to Registration under Regulation G
Agency form number: FR G-3
OMB Docket number: 7100-0018
Frequency: On occasion
Reporters: Individuals and businesses
Annual reporting hours: 2,240
Estimated average hours per response: .16
Number of respondents: 700
Small businesses are affected.

General description of report: This information collection is mandatory (15 U.S.C. 78g). Since the FR G-3 is not filed with the Federal Reserve, no issue of confidentiality arises.

Abstract: Regulation G was adopted in response to concerns of the Federal Reserve and the Securities Exchange Commission that unregulated lenders were circumventing the margin requirements of Regulations T and U. This report is event-generated and is not filed with the Federal Reserve System but retained by the lender. The report is needed to ensure that a Regulation G lender does not extend credit to purchase or carry securities in excess of the amount permitted by the Federal Reserve Board pursuant to Regulation G and to ensure that a borrower does not violate Regulation X.

2. Report title: Agreement of Domestic and Foreign Nonmember Banks
Agency form number: FR T-1, T-2
OMB Docket number: 7100-0191
Frequency: On occasion
Reporters: Nonmember Banks
Annual reporting hours: .50
Estimated average hours per response: .50
Number of respondents: 1
Small businesses are not affected.

General description of report: This information collection is mandatory (15 U.S.C. 78h) and is not given confidential treatment.

Abstract: The Federal Reserve adopted Regulation T, ''Credit by Brokers and Dealers,'' in 1934 to regulate extension of credit by and to brokers and dealers; it also covers related transactions within the Federal

Reserve's authority under the act. It imposes, among other obligations, initial margin requirements and payment rules on securities transactions. Pursuant to Section 8 of the Securities Exchange Act of 1934 and Regulation T, domestic and foreign banks that are not members of the Federal Reserve System are required to file a FR T-1, T-2 with the appropriate Federal Reserve Bank in the event that they wish to extend credit to brokers/dealers using exchange-traded securities as collateral. In addition, the form must be filed by foreign nonmember banks that issue letters of credit used as deposits against borrowings of securities by brokers-dealers. The FR T-1, T-2 requires a domestic or foreign nonmember bank to state that it is a ''bank'' as defined in section 3(a)(6) of the Securities Exchange Act of 1934, and list the state or country in which it was organized and the location of its principal place of business. No substantive changes are being made to the FR T-1, T-2. However, the phrase ''(indicate state for domestic bank or country for foreign bank)'' is added to explicitly state this requirement of Regulation T.

3. Report title: Statement of Purpose of Extension of Credit by a Creditor (under Regulation T)
Agency form number: FR T-4
OMB Docket number: 7100-0019
Frequency: On occasion
Reporters: Individuals and businesses
Annual reporting hours: 42
Estimated average hours per response: .17
Number of respondents: 250
Small businesses are affected.

General description of report: This information collection is mandatory (15 U.S.C. 78g). Because the FR T-4 is not filed with the Federal Reserve, no issue of confidentiality arises.

Abstract: The Federal Reserve adopted Regulation T, ''Credit by Brokers and Dealers,'' in 1934 to regulate extension of credit by and to brokers and dealers; it also covers related transactions within the Federal Reserve's authority under the act. It imposes, among other obligations, initial margin requirements and payment rules on securities transactions. Regulation T presumes that any extension of credit by a broker/dealer to a customer is made for the purpose of purchasing, trading, or carrying securities, and thus is subject to the Board's margin requirements. Customers and creditors are required to complete and retain the FR T-4 in the event that the customer can rebut the presumption and the creditor is thereby permitted to extend credit in excess of the amount otherwise permitted under Regulation T. The FR T-4 solicits information from borrowers regarding the purpose of each loan, and from creditors identifying collateral. No changes are being made to the FR T-4 reporting form.

4. Report title: Statement of Purpose for an Extension of Credit Secured by Margin Stock
Agency form number: FR U-1
OMB Docket number: 7100-0115
Frequency: On occasion
Reporters: Individuals and businesses
Annual reporting hours: 157,853
Estimated average hours per response: .07
Number of respondents: 10,637
Small businesses are not affected.

General description of report: This information collection is mandatory (15 U.S.C. 78g). Since the FR U-1 is not filed with the Federal Reserve no issue of confidentiality arises.

Abstract: In 1936, the Federal Reserve adopted Regulation U, ''Credit by Banks for the Purpose of Purchasing or Carrying Margin Stock,'' as a companion to Regulation T which applies to securities credit extended by brokers/dealers. Regulation U imposes restrictions upon ''banks'' (as defined in section 221.2(b) of Regulation U) that extend credit for the purpose of buying or carrying margin stock if the credit is secured directly or indirectly by margin stock. Banks may not extend more than the minimum loan value of the collateral securing such credit, as set by the Federal Reserve in section 221.8 of Regulation U. Regulation U requires that a purpose statement be completed and retained in the event that a bank extends credit in an amount exceeding $100,000 secured directly or indirectly by margin stock.

In all cases, the FR U-1 collects the following loan information from the borrower:

(1) The amount of credit being obtained; and

(2) Whether the loan is to purchase or carry margin stocks and, if not, the purpose of the loan. If the borrower affirms that the purpose of the loan is to purchase or carry margin stocks, the bank provides the following collateral information in Part II:

(3) The number of shares of stock serving as collateral;

(4) The name of the stock (issue);

(5) The market price per share;

(6) The date and source of valuation (not required if market value is obtained from regularly published information in a journal of general circulation or from an automated quotation system);

(7) The total market value per issue; and

(8) The amount of any other collateral securing the loan. No substantive changes are being made to the FR U-1 reporting form. However, (1) the phrase ''maximum loan value of margin stock is ... per cent'' for items 1 and 2 of Part II is revised to ''maximum loan value of margin stock is 50 per cent,'' and (2) the phrase ''or from an automated quotation system.'' is added to the note below item 3.

5. Report title: Written Security Program for State Member Banks
Agency form number: FR 4004
OMB Docket number: 7100-0112
Frequency: Annual
Reporters: State member banks
Annual reporting hours: 484
Estimated average hours per response: 0.5
Number of respondents: 968
Small businesses are affected.

General description of report: This recordkeeping requirement is mandatory (12 U.S.C. §§ 1882(a), 248(a)(1), and 325). Because written security programs are maintained at state member banks, no issue of confidentiality under the Freedom of Information Act arises.

Abstract: The Congress adopted the Bank Protection Act of 1968 (12 U.S.C. 1882) to promulgate rules establishing minimum standards for banks as to the installation, maintenance, and operation of security devices and procedures to discourage robberies, burglaries, and larcenies and to assist in the identification and apprehension of persons who commit such acts.

In response to the passage of the Bank Protection Act (Act), each of the federal financial institution supervisory agencies established minimum standards for security devices and procedures. The requirements established by the Board of Governors of the Federal Reserve System in 1969 for state member banks are contained in Regulation P. In the regulation, the Federal Reserve requires the board of directors of each state member bank to designate a security officer to assume the responsibility for the development, administration, and maintenance of a written security program. The original Act also contained provisions requiring financial institutions to submit periodic reports to their primary federal supervisory agency with respect to the installation, maintenance, and operation of security devices and the development of security procedures.

The Financial Institutions Reform, Recovery, and Enforcement Act of 1989 (FIRREA) includes provisions that amend the Act: eliminating the requirement that each bank submit periodic reports to its regulator, but

retaining the requirement that each bank maintain a written security program. The Federal Reserve amended Regulation P in 1991 to reflect this change. Each state member bank must maintain a written security program in its records. This program should include a requirement to install security devices and should establish procedures that satisfy minimum standards in the regulation, with the security officer determining the need for additional security devices and procedures based on the location of the banking office. No changes are being proposed to the recordkeeping requirement.

6. Report title: Annual Report on Status of Disposition of Assets Acquired in Satisfaction of Debts Previously Contracted
Agency form number: FR 4006
OMB Docket number: 7100-0129
Frequency: Annual
Reporters: Bank holding companies that have acquired assets or shares through foreclosure in the ordinary course of collecting a debt previously contracted
Annual reporting hours: 3,000
Estimated average hours per response: 5
Number of respondents: 600
Small businesses are affected.
General description of report: This information collection is mandatory (12 U.S.C. 1843(c)(2) and 1844(c) and may be given confidential treatment upon request (5 U.S.C. 552(b)(4)).
Abstract: The Federal Reserve has statutory responsibility for regulation and supervision of bank holding companies (BHCs) under the Bank Holding Company Act of 1956, as amended (Act). Under the Act, the Federal Reserve must ensure that impermissible assets are divested in a manner consistent with the statute. The Act sets forth the time frame within which assets and shares acquired in collecting a debt previously contracted (DPC) must be divested.

The Federal Reserve does not require BHCs to obtain prior approval for their acquisition of DPC shares or assets so long as they divest them within two years of the date of their initial acquisition. If the BHC is unsuccessful in divesting them within the two-year period, it must request and obtain approval to continue to hold them. The Board may extend the initial two-year period for up to three additional one-year periods. Further, for real estate or other DPC assets that are demonstrated to have value and marketability characteristics similar to real estate, the Board may permit additional extensions for up to five years (for a total of ten years).

The Federal Reserve does require that the BHC make good faith efforts to dispose of DPC shares or assets and notify it annually of the progress being made with respect to their disposition. Beginning two years after the date of acquisition of DPC assets or shares, the BHC must report annually to the Federal Reserve on its efforts to divest them.

The Federal Reserve uses the information to determine:

(1) Whether a BHC has made timely, good faith efforts to comply with the requirements of the Act; and

(2) The effect that the sale or retention of the property will have on the organization. This report serves to identify potentially unsound situations and to encourage timely compliance with the divestiture requirement as contained in the statutes and regulation. The Federal Reserve monitors the BHC's efforts to effect an orderly divestiture, and may require divestiture before the end of the approved period if supervisory concerns warrant such action.

The reporting requirement only applies to those BHCs that fail to divest DPC shares or assets within two years. They must file an annual report on their efforts to accomplish divestiture of the shares or assets. The report must describe the efforts made to date to effect divestiture (including reasons for any delay in the pace of divestiture), and must include financial and descriptive data with respect to assets as well as the sales price of divested assets.

Affected BHCs file the annual report on their progress toward divestiture with their district Federal Reserve Bank. The due date for the report is based on the date the BHC acquired the DPC assets or shares. The BHC submits the information in a letter format, which is neither stored electronically nor published. No changes are being proposed to the FR 4006 reporting requirement.

Board of Governors of the Federal Reserve System, July 13, 1995.

William W. Wiles,

Secretary of the Board.

[FR Doc. 95–17714 Filed 7–18–95; 8:45 am]

Billing Code 6210–01–F

DEPARTMENT OF HEALTH AND HUMAN SERVICES

Health Care Financing Administration

Public Information Collection Requirements Submitted to the Office of Management and Budget (OMB) for Clearance

AGENCY: Health Care Financing Administration, HHS.

The Health Care Financing Administration (HCFA), Department of Health and Human Services (HHS), has submitted to OMB the following proposals for the collection of information in compliance with the Paperwork Reduction Act (Public Law 96–511).

1. *Type of Request:* Extension; *Title of Information Collection:* Statistical Report on Medical Care: Eligibles, Recipients, Payments & Services; *Form No.:* HCFA–2082; *Use:* The data reported in the HCFA–2082 are the basis of actuarial forecasts for Medicaid services utilization and cost; of analyses and cost savings estimates required for legislative initiatives relating to Medicaid and HHS, the press, and the Congress. *Frequency:* Quarterly; *Respondents:* State, local, or tribal government; *Number of Respondents:* 54; *Total Annual Responses:* 21,937.

2. *Type of Request:* Reinstatement with change; *Title of Information Collection:* Internal Revenue Service (IRS)/Social Security Administration (SSA)/HCFA Data; *Form No.:* HCFA-R–137; *Use:* Employers identified through a match of IRS, SSA, and Medicare records will be contacted concerning group health plan coverage of identified individual to ensure compliance with Medicare Secondary Payer provisions found at 42 USC 1395y(b). *Frequency:* Annually; *Respondents:* Business or other for profit institutions, not-for-profit institutions, farms, Federal Government, State, local, or tribal government; *Number of Respondents:* 581,452; *Total Annual Responses:* 2,207,801.

3. *Type of Request:* Reinstatement with change; *Title of Information Collection:* Conditions of Coverage for Portable X-Ray Suppliers; *Form No.:* HCFA-R–43; *Use:* This information is needed to determine if portable X-ray suppliers are in compliance with published health and safety requirements; *Frequency:* Annually; *Respondents:* Business or other for profit; *Number of Respondents:* 550; *Total Annual Responses:* 1,375.

4. *Type of Request:* New collection; *Title of Collection:* Evaluation of Intermediate Care Facilities for Persons with Mental Retardation; *Form No.:* HCFA-R–176; *Use:* The purpose of the project is to establish a baseline of current psychoactive drug usage of beneficiaries in Intermediate Care Facilities for Persons with Mental Retardation (ICFs/MR). Data will be collected on approximately 2,040 beneficiaries using the Medical Administration Record. There will be no attempt to evaluate whether the drug usage is appropriate. Information

regarding the characteristics of ICRs/MR will be gathered from 480 facilities; *Frequency:* Annually; *Respondents:* Individuals and households, not-for-profit institutions, Federal Government, State, local, or tribal government; *Number of Respondents:* 2,520; *Total Annual Responses:* 2,520.

Additional Information or Comments: Call the Reports Clearance Office on (410) 786–1326 for copies of the clearance request packages. Written comments and recommendations for the proposed information collections should be sent within 30 days of this notice directly to the OMB Desk Officer designated at the following address: OMB Human Resources and Housing Branch, Attention: Allison Eydt New Executive Office Building, Room 3001 Washington, D.C. 20503

Dated: July 10, 1995.

Kathleen B. Larson,

Director, Management Planning and Analysis Staff, Office of Financial and Human Resources, Health Care Financing Administration.

[FR Doc. 95–17658 Filed 7–18–95; 8:45 am]

BILLING CODE 4120–03–P

DEPARTMENT OF THE INTERIOR

Performance Review Board Appointments

AGENCY: Department of the Interior.

ACTION: Notice of performance review board appointments.

SUMMARY: This notice provides the names of individuals who have been appointed to serve as members of the Department of the Interior Performance Review Board. The publication of these appointments is required by Section 405(a) of the Civil Service Reform Act of 1978 (P.L. 95–454, 5 U.S.C. 4314(c)(4).

DATE: These appointments are effective July 19, 1995.

FOR FURTHER INFORMATION CONTACT: Woodrow W. Hopper, Jr., Director of Personnel, Office of the Secretary, Department of the Interior, 1849 C Street NW., Washington, DC 20240, Telephone Number: (202) 208–6761.

U.S. Department of the Interior SES Performance Review Board—1995

Mary Ann Lawler, Chair, Office of Budget (Career Appointee)
Joyce N. Fleischman, Office of the Inspector General (Career Appointee)
Robert Stanton, National Park Service (Career Appointee)
John Murphy, Bureau of Mines (Career Appointee)
Mary Josie Blanchard, Office of Surface Mining Reclamation and Enforcement (Career Appointee)
Hilda Manuel, Bureau of Indian Affairs (Career Appointee)

Dated: July 13, 1995.

Dolores Chacon,

Acting Director of Personnel.

[FR Doc. 95–17685 Filed 7–18–95; 8:45 am]

BILLING CODE 4310–10–M

Fish and Wildlife Service

Availability of a Habitat Conservation Plan, Environmental Assessment, and Receipt of an Application for an Incidental Take Permit of Utah Prairie Dog Related to the Expansion of an Existing Warehouse by the Coleman Company, Inc., Cedar City, Iron County, Utah

AGENCY: Fish and Wildlife Service, Interior.

ACTION: Notice.

SUMMARY: The Coleman Company (Applicant) has applied to the Fish and Wildlife Service for an incidental take permit pursuant to section 10(a)(1)(B) of the Endangered Species Act (Act) of 1973, as amended. The Applicant has been assigned Permit Number PRT–804404. The requested permit, which is for a period not to exceed 2 years, would authorize the incidental take of the threatened Utah prairie dog (*Cynomys parvidens*). The proposed take would occur as a result of a 1.4 acre expansion of an existing warehouse owned by The Coleman Company in Cedar City, Iron County, Utah.

The Applicant has prepared a habitat conservation plan and an environmental assessment for the incidental take permit application. This notice is provided pursuant to section 10(c) of the Act and National Environmental Policy Act regulations (40 CFR 1506.6).

DATES: Written comments on the habitat conservation plan, permit application, and environmental assessment must be received on or before August 18, 1995.

ADDRESSES: Requests for any of the above documents and comments or materials concerning them should be sent to the Assistant Field Supervisor, Utah Field Office, U.S. Fish and Wildlife Service, 145 East 1300 South, Suite 404, Salt Lake City, Utah 84115. The documents and comments and materials received will be available for public inspection, by appointment, during normal business hours at the above address. Please refer to Permit Number PRT–804404 in all correspondence regarding these documents.

FOR FURTHER INFORMATION CONTACT: Robert D. Williams, Assistant Field Supervisor (see **ADDRESSES** above) (telephone (801) 524–5001 extension 124, facsimile (801) 524–5021).

SUPPLEMENTARY INFORMATION: Section 9 of the Endangered Species Act (Act) of 1973, as amended (16 U.S.C. 1531 *et seq.*), prohibits the ''taking'' of any threatened or endangered species, including the Utah prairie dog. However, the Fish and Wildlife Service, under limited circumstances, may issue permits to take threatened and endangered wildlife species if such taking is incidental to, and not the purpose of, otherwise lawful activities. Regulations governing permits for threatened and endangered species are at 50 CFR 17.22.

The Coleman Company, a corporation, wishes to construct a 52,800 square foot addition to an existing warehouse in Cedar City, Iron County, Utah. The construction will impact 1.4 acres of a 3.7 acre vacant lot on the south side of the warehouse. The entire 3.7 acre lot is known to be inhabited by the Utah prairie dog, a threatened species.

The Applicant considered a no-action alternative. There are no other logistically suitable sites for warehouse expansion of the Coleman property. The Applicant rejected the no-action alternative because this would cause loss of use of the private property, resulting in an economic loss.

Authority: The authority for this action is the Endangered Species Act of 1973, as amended (16 U.S.C. 1531 *et seq.*) and the National Environmental Policy Act of 1969, as amended (42 U.S.C. 4321 *et seq.*).

Dated: July 11, 1995.

Terry T. Terrell,

Deputy Regional Director, Denver, Colorado.

[FR Doc. 95–17710 Filed 7–18–95; 8:45 am]

BILLING CODE 4310–55–M

Availability of a Habitat Conservation Plan, Environmental Assessment, and Receipt of an Application for an Incidental Take Permit of Utah Prairie Dog Related to the Development of a 33-Acre Housing Community by West Hills, L.L.C., Cedar City, Iron County, Utah

AGENCY: Fish and Wildlife Service, Interior.

ACTION: Notice.

SUMMARY: West Hills, L.L.C. (Applicant) has applied to the Fish and Wildlife Service for an incidental take permit pursuant to section 10(a)(1)(B) of the Endangered Species Act (Act) of 1973, as amended. The Applicant has been

assigned Permit Number PRT–804479. The requested permit, which is for a period not to exceed 2 years, would authorize the incidental take of the threatened Utah prairie dog (*Cynomys parvidens*). The proposed take would occur as a result of development of a 33-acre housing community on privately-owned property within the city limits of Cedar City, Iron County, Utah.

The Applicant has prepared a habitat conservation plan and an environmental assessment for the incidental take permit application. This notice is provided pursuant to section 10(c) of the Act and National Environmental Policy Act regulations (40 CFR 1506.6).

DATES: Written comments of the habitat conservation plan, permit application, and environmental assessment should be received on or before August 18, 1995.

ADDRESSES: Requests for any of the above documents and comments or materials concerning them should be sent to the Assistant Field Supervisor, Utah Field Office, U.S. Fish and Wildlife Service, 145 East 1300 South, Suite 404, Salt Lake City, Utah 84115. The documents and comments and materials received will be available for public inspection, by appointment, during normal business hours at the above address. Please refer to Permit Number PRT–804479 in all correspondence regarding these documents.

FOR FURTHER INFORMATION CONTACT: Robert D. Williams, Assistant Field Supervisor, (see **ADDRESSES** above) (telephone (801) 524–5001 extension 124, facsimile (801) 524–5021).

SUPPLEMENTARY INFORMATION: Section 9 of the Endangered Species Act (Act) of 1973, as amended (16 U.S.C. 1531 *et seq.*), prohibits the ''taking'' of any threatened or endangered species, including the Utah prairie dog, However, the Fish and Wildlife Service, under limited circumstances, may issue permits to take threatened and endangered wildlife species if such taking is incidental to, and not the purpose of, otherwise lawful activities. Regulations government permits for threatened and endangered species are at 50 CFR 17.22.

West Hills, L.L.C., a small company, wishes to construct 214 housing units on a 33-acre parcel of property in Cedar City, Iron County, Utah. The project also includes installation of associated infrastructures including natural gas, sewer, water, and phone; and development of streets, parking areas, tennis courts, and a club house. Approximately 2 acres on the north side of the property is known to be inhabited by the Utah prairie dog, a threatened species.

The Applicant considered a no action alternative. The prairie dogs are situated on the property in such a way that the proposed development cannot be planned to avoid them. Furthermore, this is a small colony surrounded by industrial and residential development, and a State highway. Implementation of the no action alternative would cause loss of use of the private property, resulting in an economic loss.

Authority: The authority for this action is the Endangered Species Act of 1973, as amended (16 U.S.C. 1531 *et seq.*) and the National Environmental Policy Act of 1969, as amended (42 U.S.C. 4321 *et seq.*).

Dated: July 11, 1995.

Terry T. Terrell,

Regional Director, Denver, Colorado.

[FR Doc. 95–17711 Filed 7–18–95; 8:45 am]

BILLING CODE 4310–55–M

Bureau of Land Management

[CA–930–1430–01; CARI 05072]

Order Opening Land Reconveyed; California

AGENCY: Bureau of Land Management, Interior.

ACTION: Notice.

SUMMARY: The City of Barstow has issued a quitclaim deed to the United States which was recorded on July 28, 1994 in the official records of San Bernardino County, California. The title evidence was acceptable and title was accepted on behalf of the United States on June 7, 1995.

EFFECTIVE DATE: August 18, 1995.

FOR FURTHER INFORMATION CONTACT: John Beck, BLM California State Office (CA–931.2), 2800 Cottage Way, Room E–2845, Sacramento California, 95825; 916–979–2858.

SUPPLEMENTARY INFORMATION: On March 30, 1965, Patent No. 04–65–0234 was issued to the City of Barstow under the Act of June 14, 1926 as amended (43 U.S.C. 869 *et seq*) for the following described land:

San Bernardino Meridian

T. 9 N., R. 2 W.
Sec. 15, W½NE¼NE¼, W½NE¼NE¼NE¼, NE¼NE¼NE¼NE¼, W½SE¼NE¼NE¼, NE¼SE¼NE¼NE¼, W½SE¼NE¼, N½NE¼SE¼NE¼, SW¼NE¼SE¼NE¼, SW¼SE¼SE¼NE¼, SW¼NE¼, S½ NW¼NE¼, NE¼NW¼NE¼.

The patent contained a provision that the land would revert to the United States in the event the patentee or its successor, used the land for purposes other than that specified in the patent. The land was not improved in accordance with the provision of the plan of development on file with this Bureau; therefore, the land reverted back to the United States by operation of law.

At 10 a.m. on August 18, 1995, the land will be opened to the operation of the public land laws generally, subject to valid existing rights, the provisions of existing withdrawals, other segregations of record, and the requirements of applicable law. All valid applications received at or prior to 10 a.m. on August 18, 1995, shall be considered as simultaneously filed at that time. Those received thereafter shall be considered in the order of filing.

At 10 a.m. on August 18, 1995, the land will be opened to location and entry under the United States mining laws subject to valid existing rights, the provisions of existing withdrawals, other segregations of record, and the requirements of applicable law. Appropriation of any of the land described in this order under the general mining laws prior to the date and time of restoration is unauthorized. Any such attempted appropriation, including attempted adverse possession under 30 U.S.C. 38 (1988), shall vest no rights against the United States. Acts required to establish a location and to initiate a right of possession are governed by State law where not in conflict with Federal laws. The Bureau of Land Management will not intervene in disputes between rival locators over possessory rights since Congress has provided for such determinations in local courts.

Dated: July 10, 1995.

David McIlnay,

Chief, Branch of Lands.

[FR Doc. 95–17662 Filed 7–18–95; 8:45 am]

BILLING CODE 4310–40–P

[CO–956–95–1420–00]

Colorado: Filing of Plats of Survey

July 6, 1995

The plats of survey of the following described land are officially filed in the Colorado State Office, Bureau of Land Management, Lakewood, Colorado, effective 10:00 a.m. on July 6, 1995.

The plat representing the metes-and-bounds survey of lot 13, in section 3, in Township 4 South, Range 83 West, of the Sixth Principal Meridian, Group 1085, Colorado, was accepted May 8, 1995.

The plat representing the metes-and-bounds survey of lot 2, in section 9, in Township 2 South, Range 84 West, of the Sixth Principal Meridian, Group 1087, Colorado, was accepted May 5, 1995.

The plat representing the dependent resurvey of a portion of the north boundary and a portion of the subdivisional lines and the subdivision of certain sections and an informative traverse of the center line of Colorado State Highway No. 325 in sections 3 and 4, in Township 5 South, Range 92 West,the Sixth Principal Meridian, Group 1030, Colorado, was accepted May 23, 1995.

The plat representing the dependent resurvey of a portion of the north boundary, east boundary (Twelfth Guide Meridian West), subdivisional lines, and the subdivision of certain sections in Township 3 North, Range 97 West, Sixth Principal Meridian, Groups 967 and 1015, Colorado, was accepted May 9, 1995.

These surveys were executed to meet certain administrative needs of this Bureau.

The plat representing the dependent resurvey of a portion of Tracts 44, 54, and 55 in Township 10 South, Range 86 West, of the Sixth Principal Meridian, Group 1061, Colorado, was accepted May 4, 1995.

This survey was executed to meet certain administrative needs of the U.S. Forest Service.

The plat representing the dependent resurvey of a portion of the north boundary of the Southern Ute Indian Reservation (south boundary of the Ute Ceded Lands), portions of the subdivisional lines and subdivisional lines of certain sections, and the subdivision of section 12U, of Township 34 North, Range 7 West, (South of the Ute Line), New Mexico Principal Meridian, Group No. 1036, Colorado, was accepted April 20, 1995.

This survey was executed to meet certain administrative needs of the Southern Ute Indian Reservation.

Carl F. Nagy,

Acting Chief Cadastral Surveyor for Colorado.

[FR Doc. 95–17650 Filed 7–18–95; 8:45 am]

BILLING CODE 4310–JB–P

[ID–942–7130–00–7660]

Filing of Plats of Survey; Idaho

The plats of the following described land were officially filed in the Idaho State Office, Bureau of Land Management, Boise, Idaho, effective 9:00 a.m., July 10, 1995.

The plat representing the dependent resurvey of a portion of the subdivisional lines, subdivision of section 29, the survey of the centerline of U.S. Highway No. 93, and a metes-and-bounds survey in section 29, T. 8 N., R. 23 E., Boise Meridian, Idaho, Group No. 900, was accepted, July 3, 1995.

The plat representing the dependent resurvey of a portion of the subdivisional lines, subdivision of section 9, and a metes-and-bounds survey in section 9, T. 8 N., R. 21 E., Boise Meridian, Idaho, Group No. 901, was accepted July 3, 1995.

The supplemental plats, three (3), of partially unsurveyed T. 48 N., R. 5 E., Boise Meridian, Idaho, prepared to create tracts 84–88, 89–93, and 94–96 respectively, were accepted July 3, 1995.

These plats were prepared to meet certain administrative needs of the Bureau of Land Management.

All inquiries concerning the survey of the above described land must be sent to the Chief, Branch of Cadastral Survey, Idaho State Office, Bureau of Land Management 3380 Americana Terrace, Boise, Idaho, 83706.

Dated: July 10, 1995.

Duane E. Olsen,

Chief Cadastral Surveyor for Idaho.

[FR Doc. 95–17663 Filed 7–18–95; 8:45 am]

BILLING CODE 4310–GG–M

[CA–930–1430–00; CACA 34589]

Notice of Proposed Withdrawal and Opportunity for Public Meeting; California

AGENCY: Bureau of Land Management, Interior.

ACTION: Notice.

SUMMARY: The Bureau of Land Management proposes to withdraw 194 acres of Federal lands and 6,514 acres of non-federal lands along the Trinity River to protect the recreational values associated with the Trinity River Acquisition Area. This notice closes the federal lands for up to two years from mining. The lands will remain open to mineral leasing.

DATES: Comments and requests for meeting should be received on or before October 17, 1995.

ADDRESSES: Comments and meeting requests should be sent to the California State Director (CA–931), BLM, 2800 Cottage Way, Room E–2845, Sacramento, California 95825.

FOR FURTHER INFORMATION CONTACT: Marcia Sieckman, BLM California State Office, 916–979–2858.

SUPPLEMENTARY INFORMATION: On July 13, 1995, a petition was approved allowing the Bureau of Land Management to file an application to withdraw the following described lands from settlement, sale, location or entry under the United States mining laws (30 U.S.C. Ch.2), subject to valid existing rights:

Mount Diablo Meridian

Parcel No. 1:

T. 33 N., R. 9 W.,
Sec. 23, S½SE¼.

Excepting therefrom all that portion there of conveyed in the deed to Jerald Lee Schnor, recorded 7/11/94 in Book 332 of Official Records Page 960.

Also excepting therefrom all that portion there of conveyed in the deed to Harvey J. Watkins, et al, recorded 7/11/94 in Book 332 of Official Records Page 962.

Parcel No. 2:

T. 33 N., R 9 W.,
Sec. 26, W½NE¼, NE¼NE¼, fraction of NE¼NW¼.

Commencing at the established quarter section corner between sections 23 and 26, and running thence on section line variation 18° 27′ East, West 5.30 chains to a point on the Island in the Trinity River near the bridge; thence South 19° East 16.29 chains to the North-South centerline of section 26; thence North 15.40 chains along the North-South centerline of Section 26 to and closing on the Starting Corner.

Excepting therefrom Parcel No. 2 above any portions thereof described in the following deeds:

(A) Quit Claim Deed to Owen E. Lowden, recorded December 1, 1876 in Book 13 of Deeds at Page 457.

(B) Deed to James Adrian, recorded April 15, 1922 in Book 43 of Deeds at Page 166.

The areas described aggregate 194 acres in Trinity County.

The petition was also approved allowing the Bureau of Land Management to file an application to withdraw the following described non-Federal lands (private surface and private minerals). In the event the non-Federal lands (private surface and private minerals) return to Federal ownership, the lands would become subject to the withdrawal.

Mount Diablo Meridian

T. 32 N., R. 9 W.,
Sec. 4, W½NW¼, SW¼SE¼, SE¼SW¼, and SW¼NE¼SW¼;
Sec. 5, lots 1 to 4, inclusive, S½N½, SE¼SE¼, and N½SW¼;
Sec. 6, NE¼NW¼SE¼, and SE¼NE¼SW¼
Sec. 7, lot 3;
Sec. 8, E½NE¼;
Sec. 9, NW¼, and W½NE¼.
T. 32 N., R. 10 W.,
Sec. 1, lots 2 to 4, inclusive, W½SW¼NE¼, SW¼NW¼NE¼, and W½NW¼SE¼;
Sec. 3, lots 1, 3, and 4, and E½E½SE¼;
Sec. 11, E½, E½NW¼, and NW¼NW¼;

Sec. 12, S½NW¼NE¼NE¼, S½SW¼NW¼NE¼, NW¼SW¼NE¼, SE¼NW¼, E½SW¼NW¼, and SW¼.
T. 33 N., R. 8 W.,
Sec. 7, SE¼SE¼;
Sec. 8, N½S½;
Sec. 18, E½NE¼SE¼, and NE¼SE¼SW¼;
Sec. 19, lots 1, and 2, S½S½NE¼NW¼, N½N½SE¼NW¼, and N½NE¼.
T. 33 N., R. 9 W.,
Sec. 13, lot 1, NW¼NE¼, N½SW¼NE¼, NE¼NW¼, E½NW¼, SW¼SE¼NW¼, and SE¼SE¼;
Sec. 14, SE¼, SE¼NW¼, S½NE¼, S½SW¼, and NE¼SW¼;
Sec. 21, S½;
Sec. 23, S½NE¼NE¼NE¼, W½, W½SW¼NE¼, NW¼NE¼, NW¼NE¼SE¼, and N½NW¼SE¼;
Sec. 24, N½;
Sec. 26, NW¼, and NW¼SW¼;
Sec. 27, lots 10, 14, 16, and 17, NE¼NW¼SE¼, SW¼NW¼SE¼, and W½SE¼NE¼;
Sec. 29, SW¼, W½SE¼, and N½;
Sec. 31, N½NE¼, SW¼NE¼, SE¼NW¼, NE¼SW¼, NW¼SE¼, and S½SE¼;
Sec. 32, W½SW¼SW¼SE¼;
Sec. 33, NW¼NW¼.
T. 33 N., R. 10 W.,
Sec. 7, Portion of MS 178;
Sec. 18, Portion of MS 178, MS 1239, MS 1388, MS 2148, MS 3198, MS 3199, and MS 3251;
Sec. 19, Portion of MS 248, MS 1925, MS 2060, MS 2119, lots 9 and 10, SE¼NE¼, and E½SE¼.
Sec. 20, lot 1, and S½SW¼;
Sec. 29, W½;
Sec. 30, N½NW¼, and NE¼;
Sec. 31, SE¼NE¼, and NE¼SE¼;
Sec. 32, lot 12, Portion of MS 913, MS 1164, NW¼SW¼, and NW¼ ;
Sec. 33, NE¼, SE¼SE¼NW¼, N½SW¼, SE¼SE¼, and E½E½NE¼SE¼;
Sec. 34, S½.
T. 33 N., R. 11 W.,
Sec. 1, lot 5, SW¼, and SW¼SW¼SW¼SE¼, ;
Sec. 12, lots 1, 4, and 5, Portion of MS 1400, MS 3250, MS 3251, MS 1374, MS 1387, NW¼SE¼;
Sec. 13, NE¼.
T. 34 N., R. 11 W.,
Sec. 26, lot 3, and Portion of MS 246;
Sec. 27, Portion of MS 245, MS 246, and lot 1;
Sec. 28, W½SW¼SW¼, and S½W½NW¼SW¼;
Sec. 34, NE¼, E½NW¼, and S½S½SW¼NW¼ ;
Sec. 35, NW¼NW¼;
Sec. 36, S½SW¼.

The areas described aggregate 6,514 acres in Trinity County.

The purpose of the proposed withdrawal is to protect the recreational values of the Trinity River Acquisition Area.

For a period of 90 days from the date of publication of this notice, all persons who wish to submit comments, suggestions, or objections in connection with the proposed withdrawal may present their views in writing to the California State Director of the Bureau of Land Management.

Notice is hereby given that an opportunity for a public meeting is afforded in connection with the proposed withdrawal. All interested persons who desire a public meeting for the purpose of being heard on the proposed withdrawal must submit a written request to the California State Director within 90 days from the date of publication of this notice. Upon determination by the authorized officer that a public meeting will be held, a notice of time and place will be published in the **Federal Register** at least 30 days before the scheduled date of the meeting.

The application will be processed in accordance with the regulations set forth in 43 CFR 2300.

For a period of 2 years from the date of publication of this notice in the **Federal Register**, the lands will be segregated as specified above unless the application is denied or canceled or the withdrawal is approved prior to that date. The temporary uses which will be permitted during this segregative period are licenses, permits, cooperative agreements, or other discretionary land use authorizations of a temporary nature.

Dated: July 13, 1995.

David McIlnay,

Chief, Branch of Lands.

[FR Doc. 95–17771 Filed 7–18–95; 8:45 am]

BILLING CODE 4310–40–P

Minerals Management Service

Announcement of Minerals Management Service Workshops on Expanded Use of Royalty-In-Kind Procedures

AGENCY: Minerals Management Service, Interior.

ACTION: Notice of workshops.

SUMMARY: The Minerals Management Service (MMS) will hold a series of one-day workshops to discuss ways to expand the ongoing pilot program for collecting Federal royalties-in-kind rather than in value. The workshops will be held as follows:

Houston, TX: August 22, 1995
Denver, CO: August 24, 1995
New Orleans, LA: September 15, 1995.

The workshops will commence at 9:30 a.m. on these respective dates and should end by 2:30 p.m. Information on locations is given at the end of this notice.

FOR FURTHER INFORMATION CONTACT: Mr. Hugh Hilliard, Minerals Management Service, Mail Stop 4013, 1849 C St. NW., Washington, DC 20240, telephone number (202) 208–3398, facsimile number (202) 208–4891; or, contact Mr. John Bratland at the same address, telephone number (202) 208–3979, facsimile number (202) 208–3118.

SUPPLEMENTARY INFORMATION: On January 1, 1995, MMS initiated a Royalty Gas Marketing Pilot in the Gulf of Mexico. In the pilot, gas royalties are collected on an in-kind basis and sold directly to gas marketing companies. This gas is taken at or near the lease and sold to competitively chosen gas marketing companies with whom MMS has contracts.

The MMS has two objectives in conducting this pilot: (1) To find processes for streamlining royalty collections in a manner that reflects changes that have occurred in the gas market, and (2) to test a process of royalty collection which promises increased efficiency and greater certainty in valuation. The MMS plans to evaluate the pilot results and issue an interim report in September 1995 and a final report by June 30, 1996.

Preliminary assessment of the pilot indicates that it will be a successful effort and suggests that MMS should undertake additional pilots employing similar in-kind collection procedures. As a first step in pursuing this expansion, MMS will conduct a series of workshops in an effort to explore new ideas and to constructively address issues which have arisen in the current pilot.

Issues

Some of the issues that MMS would like to discuss at the workshops are presented below. The listing of issues is not necessarily complete nor do the comments necessarily reflect an established policy on the part of the Federal government.

1. Prospects for In-Kind Collection of Oil Royalties

The MMS has been exploring the feasibility and possible benefits of collecting in-kind oil royalties in a manner similar to that employed in the pilot program for gas royalties. This approach would be significantly different from the long-standing program of collecting oil royalties-in-kind for sale to small refiners. In the case of oil, the net benefits of in-kind royalties are much less certain than in the case of natural gas, particularly because MMS and industry encounter fewer administrative problems in the payment of oil royalties. MMS is especially interested in exploring differences between the oil and gas

markets which may suggest the need for differences in the design of a royalty-in-kind program.

2. Selection of Areas for Future Royalty-In-Kind Pilot(s)

Since the current pilot program is limited to offshore leases in the Gulf of Mexico, MMS is interested in exploring the possibility of conducting a future pilot program in an area with onshore Federal leases. Any implementation of an on-shore pilot will require close cooperation with the Bureau of Land Management and the affected states. The MMS is seeking views on what areas should be considered in future royalty-in-kind projects. Relevant considerations would include the availability of price indices, the volumes of oil or gas available, the level of market competition, special valuation issues, transportation market structure, and the views of the respective states in which the leases are located.

3. Non-Jurisdictional Pipelines in Taking Royalty Gas

Gas marketing companies taking Federal royalty gas will, in some cases, be charged for the services of non-jurisdictional pipelines. Non-jurisdictional pipelines are not regulated by the Federal Energy Regulatory Commission (FERC), which means that the owner is able to charge what the market will bear. The services of these pipelines are critical in transporting the gas from the lease or gathering point to a main pipeline inlet. The problem which arises for MMS is that, in many cases, there appears to be no effective competition in the provision of these services. In the absence of any realistic prospect that competing pipelines would be built, there is no competitive pressure imposed on the owners in pricing the services of these pipelines. This lack of competition can be reflected in a lower bid price for the in-kind royalty gas.

This issue will be examined by MMS in planning future pilots. Alternative courses of action are open to MMS in dealing with the issue of non-jurisdictional pipelines. These could include the following:

a. Eliminate from future pilots any leases in which non-jurisdictional pipeline fees will be imposed on gas marketers;

b. Employ bid evaluation criteria to determine whether the transportation adjustment to the bid reflects unusually high pipeline costs and reject bids if the costs are ‘‘too high;’’ and

c. Require lessees to deliver gas to the inlet of the jurisdictional pipeline and provide an allowance for the reasonable costs of transportation.

These alternatives are not ideal solutions. First, eliminating leases from future pilots because of non-jurisdictional pipelines essentially avoids an issue which must be addressed if in-kind royalty collection is to be applied more broadly in the future. Also, such a procedure may unnecessarily exclude leases prior to any evidence that a ‘‘pricing problem’’ exists for pipeline services. Second, bid evaluation criteria are effective in imputing value for pipeline services when competition exists or when transportation tariffs are regulated and clearly promulgated. However, the task of establishing reasonable cost for the services of non-jurisdictional pipelines could involve considerable conjecture on the part of the MMS. Third, a requirement that the lessee deliver gas to the inlet of the major pipeline would raise administrative costs since MMS would need to grant an allowance to cover the expenses of additional transportation.

4. Aggregation of Leases and the Use of Alternate Bid Procedures

In the current gas marketing pilot, leases were aggregated into groups of various sizes. These groupings were based on location and pipeline proximity. However, a view has been expressed that MMS should have used larger aggregations of leases which would mean a smaller total number of groups. One possible rationale for larger aggregations is that the sale price of gas received by marketers is sensitive to volumes; that is, larger volumes can be sold at a higher price per MMBtu.

The current pilot included a bidding feature designed to accommodate marketers desiring to market larger volumes of gas. The alternate bid procedure allowed bids on an aggregation of groups. Such bids would win the gas in the aggregation if the alternate bid were to exceed the total value of the next highest bids for the groups in the aggregation. The MMS was surprised by the apparent lack of interest in the alternate bid procedure. One possible explanation is that the preparation of alternate bids is more complex and time-consuming. Prospective bidders were given a relatively brief period in which to prepare bids after the issuance of the Invitation for Bids (IFB).

5. Lessee Responsibilities in Providing Federal In-Kind Gas Royalties

A long-standing and sometimes controversial element of the Federal royalty collection process has been the requirement that the lessee place the product in ‘‘marketable condition’’ at no cost to the lessor. The current pilot largely conforms to these traditional procedures by specifying that the lessee is required to place the royalty gas in marketable condition (pipeline condition, i.e., after any necessary dehydration, sweetening, and compression) before it is taken by the purchaser of MMS royalty gas. Lessees have often argued that the marketable condition rule imposes a royalty on value added by the lessee, rather than simply on the value of the produced mineral. It has also been argued that this policy can negatively affect the efficient management and ultimate recovery of the resource.

In the current pilot, MMS indirectly shares in the costs of marketing, to the extent that marketers pass those costs on through the bid price. In evaluating the pilot, MMS will be looking at the effect that different procedures may have on Federal revenues. The MMS would welcome views at the workshop on how responsibilities can best be shared between the lessor and the lessee in order to ensure efficient management of the resource, a market-based royalty collection system that is less costly to administer, and receipt of fair market value by the Government for its royalty share of production.

6. Appropriate Index Prices in Gas Royalty In-Kind

In the current pilot, a single price index (Inside FERC) was used as the basis for the bidding and subsequent royalty payment. The use of the Inside FERC indices was a convenient and familiar alternative during a period in which the MMS was trying to quickly design and implement the pilot for the 1994–95 winter season. However, the view has been expressed that MMS should employ several published indices in future pilots or expansions of in-kind royalty collection. Possible approaches could involve the use of a composite index based on all of the published prices for gas in a particular area or allowing the bidder to choose which index to use.

The MMS also is open to alternative bidding procedures which are not necessarily tied to published index prices. Conceivably some other price could serve as the basis upon which bids could be formulated. Also, in exploring alternative bidding procedures, MMS is examining the feasibility of including transportation rates in the bids.

7. Alternative Contract Terms

In the current pilot, the contract with the gas marketer is for one year. However, the one year contract may not be ideal for all marketing firms. There may be a net advantage to be gained from contracts of either longer or shorter duration. None the less, there are trade-offs associated with different contract lengths. Since the bid price (expressed in terms of monthly index price, plus or minus adjustment) is binding for the entire term of the contract, prospective contractors may perceive greater risk in being committed for a longer term. Possible changes in transportation tariffs during the contract term have been noted as one source of uncertainty. But one trade-off arises in the possibility that a contractor may derive some benefit from a longer term sales commitment and thus be able to market in-kind royalty gas for a higher price. This trade-off may affect different marketers in different ways. The workshops will provide an opportunity to discuss issues surrounding contracts of different durations.

In addition, MMS would be interested in views on whether to explore contracts other than simply selling wet gas at the lease. For example, certain types of processing contracts (e.g., keep-whole contracts) could be considered.

8. Audit Rights in Contracts With Gas Marketers, Agreements With Lessees

In the current pilot, MMS retained the right to audit gas marketers' records and imposed various data reporting and record retention requirements on the marketers. Since the only elements required for calculating the payments due by the marketers are the bid price and the quantity and quality of gas sold, it is anticipated that MMS' audit needs will be substantially less than those required for ensuring that lessees paying royalties in value have paid the proper amount. The MMS is interested in additional views on the proper amount of data reporting, record retention, and audit rights to incorporate in future royalty-in-kind pilot programs.

With regard to the lessees, MMS will verify that the volumes delivered satisfy the royalty obligation. In addition, the lessees in the pilot agreed to provide raw data on the sales of their shares of production. The MMS requested this information to use in the evaluation of the pilot.

9. Gas Sales Contract and Volunteer Agreement (VA) as the Basis for RIK Regulations

If MMS is to move ahead with more extensive application of in-kind collection procedures, regulations may need to be drafted. In the current pilot, the two documents which define procedural compliance for gas marketers and volunteer lessees are the gas sales contract and the VA. These documents would need to be the basis for the drafting of regulatory language. Clearly some changes would need to be made as some of the above issues are addressed and as the current pilot is evaluated. However, some of these considerations can be addressed now in the context of a workshop. Participants in the workshops can suggest which requirements should or should not be codified in regulations. They also can provide input on any requirements that they found either helpful or overly restrictive.

10. Conditions on Auction Participation and Structure

Some type of procedure must be used in future pilots to establish or determine bidder qualification. The IFB issued for the current pilot employed a self-certification for bidders. This self-certification was a signed statement that the prospective bidder had marketed a certain volume of gas over a specified period of time. Another procedure which MMS will consider is the use of performance bonds. The respective merits and disadvantages of these approaches should be addressed in one of the workshop sessions.

Also, in designing future pilots, MMS must consider the needs of firms which may encounter some competitive disadvantage in the marketing of gas. A future pilot could address means for encouraging participation of such firms while at the same time ensuring that the Government receives fair market value for the royalty oil or gas. A workshop can address these needs.

Information on Participation and Panels

The workshops are open to the public. The one-day workshops will include an introduction followed by four panel presentations and discussions. Each of the panels will be composed of representatives from industry and MMS. A draft agenda follows:

- Introduction, overview of the current pilot, goals and format for workshops;
- Requirements placed on lessees (e.g., marketable condition, data submitted to MMS, coordination with purchasers, possible requirement to deliver gas at a point away from the lease);
- Requirements placed on purchasers (e.g., transportation of product away from the lease, data required by MMS, coordination with lessees, balancing, contract provisions concerning breach, payment terms, flexibility);
- Auction procedures and other contract terms (e.g., aggregation of leases, use of price indices, contract length, participation by small and disadvantaged firms); and
- Suggestions for future pilots (e.g., location, products, format, timing).

Addresses

The workshops will be held at the following locations:

Minerals Management Service, Gulf of Mexico Regional Office, Elmwood Towers Building, Conference Rooms 111–115, 1201 Elmwood Park Boulevard, Jefferson, Louisiana 70123

Minerals Management Service, Houston Area Audit Office, 4141 N. Sam Houston Parkway, Houston, TX 77032–3843

Denver Federal Center, 6th & Kipling, U.S.G.S., Building 25, Lecture Halls A and B, (Rooms 1252 and 1254), Lakewood, Colorado 80215

Registration

Since seating will be limited, those wishing to attend any of the workshops should register in advance, no later than August 4, 1995. Registration should be made by phone (202) 208–3398, (202) 208–3822, facsimile (202) 208–3118 or mail to Ms. Ruby Minor or Ms. LaVerne Gailliard, Minerals Management Service, Mail Stop 4013, 1849 C St. NW., Washington, DC 20240. Copies of the Invitation for Bids and the Volunteer Agreement will be available to registrants on request.

Comments

Written comments on the workshops or the panels should be addressed to Mr. Hugh Hilliard at the address given above or sent by facsimile c/o Mr. Hilliard to the number given.

Dated: July 13, 1995.

Lucy Querques,

Associate Director, Policy and Management Improvement.

[FR Doc. 95–17673 Filed 7–18–95; 8:45 am]

BILLING CODE 4310–MR–M

National Park Service

Cane River National Heritage Area Commission; Meeting

AGENCY: National Park Service, Interior. Jean Lafitte National Historical Park and Preserve.

ACTION: Notice of Meeting.

SUMMARY: Notice is hereby given in accordance with the Federal Advisory

Committee Act that a meeting of the Cane River National Heritage Area Commission will be held at 1 p.m. at the following location and date.

DATES: August 5, 1995.

LOCATION: Student Union Ballroom, Northwestern State University, Natchitoches, Louisiana 71497.

FOR FURTHER INFORMATION CONTACT: Henry Law, Acting Superintendent, Cane River Creole National Historical Park and National Heritage Area, c/o Superintendent, National Park Service, 365 Canal Street, Suite 3080, New Orleans, Louisiana 70130–1142, (504) 589–3882, extension 108.

SUPPLEMENTARY INFORMATION: The Cane River National Heritage Area Commission was established pursuant to Section 402 of Public Law 103–449, to assist in the implementation of the Cane River Creole National Historical Park and the Cane River National Heritage Area and to provide guidance for the management of the heritage area.

The matters to be discussed at this meeting include:

—Impanelment of the Commission

—Election of Commission Officers

—National Park Service Presentations on Heritage Areas and Commission Operations

—General Management Plan

—Budget

—Activation Status of Cane River Creole National Historical Park and National Heritage Area

The meeting will be open to the public. However, facilities and space for accommodating members of the public are limited, and persons will be accommodated on a first-come-first-served basis. Any member of the public may file a written statement concerning the matters to be discussed with the Acting Superintendent, Cane River Creole National Historical Park and National Heritage Area.

Minutes of the meeting will be available for public inspection four weeks after the meeting at the offices of Jean Lafitte National Historical Park and Preserve.

Dated: June 29, 1995.

Frank Catroppa,

Field Director, Southeast Area.

[FR Doc. 95–17668 Filed 7–18–95; 8:45 am]

BILLING CODE 4310–70–M

INTERNATIONAL TRADE COMMISSION

[Investigation No. 731–TA–706 (Final)]

Canned Pineapple Fruit From Thailand

Determination

On the basis of the record [1] developed in the subject investigation, the Commission unanimously determines, pursuant to section 735(b) of the Tariff Act of 1930 (19 U.S.C. 1673d(b)) (the Act), that an industry in the United States is materially injured by reason of imports from Thailand of canned pineapple fruit,[2] provided for in subheading 2008.20.00 of the Harmonized Tariff Schedule of the United States, that have been found by the Department of Commerce to be sold in the United States at less than fair value (LTFV).

Background

The Commission instituted this investigation effective January 9, 1995, following a preliminary determination by the Department of Commerce that imports of canned pineapple from Thailand were being sold at LTFV within the meaning of section 733(b) of the Act (19 U.S.C. 1673b(b)).[3] Notice of the institution of the Commission's investigation and of a public hearing to be held in connection therewith was given by posting copies of the notice in the Office of Secretary, U.S. International Trade Commission, Washington, DC, and by publishing the notice in the **Federal Register** of February 1, 1995 (60 FR 6290). The hearing was held in Washington, DC, on June 1, 1995, and all persons who requested the opportunity were permitted to appear in person or by counsel.

The Commission transmitted its determination in this investigation to the Secretary of Commerce on July 10, 1995. The views of the Commission are contained in USITC Publication 2907 (July 1995), entitled ''Canned Pineapple Fruit from Thailand: Investigation No. 731–TA–706 (Final).''

[1] The record is defined in sec. 207.2(f) of the Commission's Rules of Practice and Procedure (19 CFR 207.2(f)).

[2] For purposes of this investigation, canned pineapple fruit is defined as pineapple prepared into various product forms, including rings, pieces, chunks, tidbits, and crushed pineapple, that is packed and cooked in metal cans with either pineapple juice or sugar (heavy) syrup added.

[3] The petition in this investigation was filed prior to the effective date of the Uruguay Round Agreements Act (''URAA''). This investigation, thus, remains subject to the substantive and procedural rules of the pre-existing law. See Pub. L. 103–465, approved Dec. 8, 1994, 108 Stat. 4809, at § 291.

Issued: July 12, 1995.

By order of the Commission.

Donna R. Koehnke,

Secretary.

[FR Doc. 95–17739 Filed 7–18–95; 8:45 am]

BILLING CODE 7020–02–M

INTERSTATE COMMERCE COMMISSION

Availability of Environmental Assessments

Pursuant to 42 U.S.C. 4332, the Commission has prepared and made available environmental assessments for the proceedings listed below. Dates environmental assessments are available are listed below for each individual proceeding.

To obtain copies of these environmental assessments contact Ms. Tawanna Glover-Sanders, Interstate Commerce Commission, Section of Environmental Analysis, Room 3219, Washington, DC 20423, (202) 927–6203.

Comments on the following assessment are due 15 days after the date of availability:

AB–55 (SUB-NO. 508X), CSX Transportation, Inc.—Abandonment in Dickenson County, Virginia. EA available 7/7/95.

AB–3 (SUB-NO. 124X), Missouri Pacific Railroad Company—Abandonment Exemption—in Johnson, Pulaski and Massac Counties, Illinois (Joppa Branch). EA available 7/7/95.

AB–254 (SUB-NO. 6X), Providence and Worchester Railroad Company—Abandonment—In the City of New Haven, Connecticut. EA available 7/7/95.

AB–55 (SUB-NO. 509X), CSX Transportation, Inc., Abandonment in Belmont County, Ohio. EA available 7/11/95.

AB–55 (SUB-NO. 510X), CSX Transportation, Inc.—Abandonment in St. Clair County, Michigan and the Province of Ontario, Canada. EA available 7/14/95.

Comments on the following assessment are due 30 days after the date of availability:

AB–167 (SUB-NO. 1148), Consolidated Rail Corporation—Abandonment—In Allegheny and Washington Counties, PA. EA available 7/3/95.

AB–446 (SUB-NO. 1), Application of the Western Stock Show Association for Discontinuance of Service on and Abandonment of Certain Lines of the Denver Terminal Railroad Company. EA available 7/5/95.

AB–447X, Muncie and Western Railroad Company—Abandonment

Exemption—At Muncie, Delaware County, Indiana. EA available 7/10/95.

AB–57 (SUB-NO. 37X), Soo Line Railroad Company—Abandonment Exemption—In Milwaukee County, Wisconsin. EA available 7/7/95.

AB–43 (SUB-NO. 162), Illinois Central Railroad Company—Abandonment—In Hinds County, Mississippi. EA available 7/12/95.

Vernon A. Williams,

Secretary.

[FR Doc. 95–17751 Filed 7–18–95; 8:45 am]

BILLING CODE 7035–01–P

DEPARTMENT OF JUSTICE

Information Collections Under Review

The Office of Management and Budget (OMB) has been sent the following collection(s) of information proposals for review under the provisions of the Paperwork Reduction Act (44 USC Chapter 35) and the Paperwork Reduction Reauthorization Act since the last list was published. Entries are grouped into submission categories, with each entry containing the following information:

(1) The title of the form/collection;

(2) The agency form number, if any, and the applicable component of the Department sponsoring the collection.

(3) Who will be asked or required to respond, as well as a brief abstract;

(4) An estimate of the total number of respondents and the amount of time estimated for an average respondent to respond;

(5) An estimate of the total public burden (in hours) associated with the collection; and,

(6) An indication as to whether section 3504(h) of Pub. L. 96–511 applies.

Comments and/or suggestions regarding the item(s) contained in this notice, especially regarding the estimated public burden and associated response time, should be directed to the OMB reviewer, Mr. Jeff Hill on (202) 395–7340 and to the Department of Justice's Clearance Officer, Mr. Robert B. Briggs, on (202) 514–4319. If you anticipate commenting on a form/collection, but find that time to prepare such comments will prevent you from prompt submission, you should notify the OMB reviewer and the Department of Justice Clearance Officer of your intent as soon as possible. Written comments regarding the burden estimate or any other aspect of the collection may be submitted to Office of Information and Regulatory Affairs, Office of Management and Budget, Washington, DC 20503, and to Mr. Robert B. Briggs, Department of Justice Clearance Officer, Systems Policy Staff/Information Resources Management/Justice Management Division Suite 850, WCTR, Washington, DC 20530.

Extension of a Currently Approved Collection

(1) Application for Advance Permission to Enter as Nonimmigrant (Pursuant to 212(d)(3) of the Immigration and Nationality Act)

(2) Form I–192. Immigration and Naturalization Service, United States Department of Justice.

(3) Primary: Individuals or households. Others: None. The information furnished on Form I–192 will be used by the Immigration and Naturalization Service to determine if the applicant is eligible to enter the United States temporarily under the provisions of section 212(d)(3) of the Immigration and Nationality Act. Section 212 of the Act (8 U.S.C. 1182) defines certain classes of aliens who are ineligible to receive visas and who are excluded from admission into the United States. Section 212(d)(3)(B) of the Act provides for the granting of a waiver of inadmissibility for certain classes of aliens.

(4) 12,000 annual respondents at (.250) per response.

(5) 3,000 annual burden hours.

(6) Not applicable under section 3504(h) of Public Law 96–511.

Public comment on this item is encouraged.

Dated: July 13, 1995.

Robert B. Briggs,

Department Clearance Officer, United States Department of Justice.

[FR Doc. 95–17676 Filed 7–18–95; 8:45 am]

BILLING CODE 4410–10–M

Information Collections Under Review

The Office of Management and Budget (OMB) has been sent the following collection(s) of information proposals for review under the provisions of the Paperwork Reduction Act (44 U.S.C. Chapter 35) and the Paperwork Reduction Reauthorization Act since the last list was published. Entries are grouped into submission categories, with each entry containing the following information:

(1) The title of the form/collection;

(2) The agency form number, if any, and the applicable component of the Department sponsoring the collection.

(3) Who will be asked or required to respond, as well as a brief abstract;

(4) An estimate of the total number of respondents and the amount of time estimated for an average respondent to respond;

(5) An estimate of the total public burden (in hours) associated with the collection; and,

(6) An indication as to whether section 3504(h) of Pub. L. 96–511 applies.

Comments and/or suggestions regarding the item(s) contained in this notice, especially regarding the estimated public burden and associated response time, should be directed to the OMB reviewer, Mr. Jeff Hill on (202) 395–7340 and to the Department of Justice's Clearance Officer, Mr. Robert B. Briggs, on (202) 514–4319. If you anticipate commenting on a form/collection, but find that time to prepare such comments will prevent you from prompt submission, you should notify the OMB reviewer and the Department of Justice Clearance Officer of your intent as soon as possible. Written comments regarding the burden estimate or any other aspect of the collection may be submitted to Office of Information and Regulatory Affairs, Office of Management and Budget, Washington, DC 20503, and to Mr. Robert B. Briggs, Department of Justice Clearance Officer, Systems Policy Staff/Information Resources Management/Justice Management Division Suite 850, WCTR, Washington, DC 20530.

Extension of a Currently Approved Collection

(1) Request for Information from Selective Service Files.

(2) Form N–422. Immigration and Naturalization Service, United States Department of Justice.

(3) Primary: Individuals or households. Others: None. This form provides information that is essential to the determination of an applicant's eligibility for naturalization. A specific section of the current law (8 U.S.C. 1426) makes ineligible for naturalization persons who have applied for and have been exempted or discharged from training or service. The Form N–422 is used to obtain records from the Selective Service System as to whether or not an alien applied for and was exempted or discharged from training or service in the Armed Forces of the United States because of alienage and to enable designated officers of the Immigration and Naturalization Service to make a determination if an applicant for naturalization is eligible for naturalization.

(4) 2,000 annual respondents at (.166) per response.

(5) 333 annual burden hours.

(6) Not applicable under section 3504(h) of Pub. L. 96–511.

Public comment on this item is encouraged.

Dated: July 13, 1995.

Robert B. Briggs,

Department Clearance Officer, United States Department of Justice.

[FR Doc. 95–17677 Filed 7–18–95; 8:45 am]

BILLING CODE 4410–10–M

Information Collections Under Review

The Office of Management and Budget (OMB) has been sent the following collection(s) of information proposals for review under the provisions of the Paperwork Reduction Act (44 USC Chapter 35) and the Paperwork Reduction Reauthorization Act since the last list was published. Entries are grouped into submission categories, with each entry containing the following information:

(1) The title of the form/collection;

(2) The agency form number, if any, and the applicable component of the Department sponsoring the collection;

(3) Who will be asked or required to respond, as well as a brief abstract;

(4) An estimate of the total number of respondents and the amount of time estimated for an average respondent to respond;

(5) An estimate of the total public burden (in hours) associated with the collection; and,

(6) An indication as to whether section 3504(h) of Pub. L. 96–511 applies.

Comments and/or suggestions regarding the item(s) contained in this notice, especially regarding the estimated public burden and associated response time, should be directed to the OMB reviewer, Mr. Jeff Hill on (202) 395–7340 and to the Department of Justice's Clearance Officer, Mr. Robert B. Briggs, on (202) 514–4319. If you anticipate commenting on a form/collection, but find that time to prepare such comments will prevent you from prompt submission, you should notify the OMB reviewer and the Department of Justice Clearance Officer of your intent as soon as possible. Written comments regarding the burden estimate or any other aspect of the collection may be submitted to Office of Information and Regulatory Affairs, Office of Management and Budget, Washington, DC 20503, and to Mr. Robert B. Briggs, Department of Justice Clearance Officer, Systems Policy Staff/Information Resources Management/Justice Management Division Suite 850, WCTR, Washington, DC 20530.

Extension of a Currently Approved Collection

(1) Application for Certificate of Citizenship.

(2) Form N–600. Immigration and Naturalization Service, United States Department of Justice.

(3) Primary: Individuals or households. Others: None. The Form N–600 is used by the Immigration and Naturalization Service as a uniform format for obtaining essential data necessary to determine the applicant's eligibility for the requested immigration benefit. Section 341 of 8 CFR contains the procedures and guidelines to be followed by applicants. Section 341 of the Immigration and Naturalization Act (8 U.S.C. 1452) provides for the issuance of a Certificate of Citizenship to certain persons who claim to have derived United States citizenship through the naturalization of a parent or through the naturalization or citizenship of a husband or under certain other provisions of the law. Upon proof to the satisfaction of the Immigration and Naturalization Service that the applicant is a citizen, and that the applicant's alleged citizenship was derived as claimed, or acquired, as the case may be, and upon taking and subscribing before a member of the Immigration and Naturalization Service within the United States to the oath of allegiance required by the Act, such individual is furnished with a Certificate of Citizenship, but only if the individual is at the time within the United States.

(4) 30,000 annual respondents at (1.0) per response.

(5) 30,000 annual burden hours.

(6) Not applicable under section 3504(h) of Pub. L. 96–511.

Public comment on this item is encouraged.

Dated: July 13, 1995.

Robert B. Briggs,

Department Clearance Officer, United States Department of Justice.

[FR Doc. 95–17678 Filed 7–18–95; 8:45 am]

BILLING CODE 4410–10–M

Information Collections Under Review

The Office of Management and Budget (OMB) has been sent the following collection(s) of information proposals for review under the provisions of the Paperwork Reduction Act (44 USC Chapter 35) and the Paperwork Reduction Reauthorization Act since the last list was published. Entries are grouped into submission categories, with each entry containing the following information:

(1) The title of the form/collection;

(2) The agency form number, if any, and the applicable component of the Department sponsoring the collection.

(3) Who will be asked or required to respond, as well as a brief abstract;

(4) An estimate of the total number of respondents and the amount of time estimated for an average respondent to respond;

(5) An estimate of the total public burden (in hours) associated with the collection; and,

(6) An indication as to whether section 3504(h) of Pub. L. 96–511 applies.

Comments and/or suggestions regarding the item(s) contained in this notice, especially regarding the estimated public burden and associated response time, should be directed to the OMB reviewer, Mr. Jeff Hill on (202) 395–7340 *and* to the Department of Justice's Clearance Officer, Mr. Robert B. Briggs, on (202) 514–4319. If you anticipate commenting on a form/collection, but find that time to prepare such comments will prevent you from prompt submission, you should notify the OMB reviewer *and* the Department of Justice Clearance Officer of your intent as soon as possible. Written comments regarding the burden estimate or any other aspect of the collection may be submitted to Office of Information and Regulatory Affairs, Office of Management and Budget, Washington, DC 20503, *and* to Mr. Robert B. Briggs, Department of Justice clearance Officer, Systems Policy Staff/Information Resources Management/Justice Management Division, Suite 850, WCTR, Washington, DC 20530.

Extension of a Currently Approved Collection

(1) Application to Preserve Residence for Naturalization.

(2) For N–470. Immigration and Naturalization Service, United States Department of Justice.

(3) Primary: Individuals or households. Others: None. The Form N–470 is necessary to determine whether an alien, who intends to be absent from the United States for a continuous period of a year or more is eligible to preserve residence for naturalization purposes. Applications shall be filed either before or after the applicant's employment commences but before the applicant has been absent from the United States for a continuous period of one year (8 CFR 316.5(d)).

(4) 1,000 annual respondents at (.25) per response.

(5) 250 annual burden hours.

(6) Not applicable under section 3504(h) of Pub. L. 96–511.

Public comment on this item is encouraged.

Dated: July 13, 1995.

Robert B. Briggs,

Department Clearance Officer, United States Department of Justice.

[FR Doc. 95–17679 Filed 7–18–95; 8:45 am]

BILLING CODE 4410–10–M

Information Collections Under Review

The Office of Management and Budget (OMB) has been sent the following collection(s) of information proposals for review under the provisions of the Paperwork Reduction Act (44 USC Chapter 35) and the Paperwork Reduction Reauthorization Act since the last list was published. Entries are grouped into submission categories, with each entry containing the following information:

(1) The title of the form/collection;

(2) The agency form number, if any, and the applicable component of the Department sponsoring the collection.

(3) Who will be asked or required to respond, as well as a brief abstract;

(4) An estimate of the total number of respondents and the amount of time estimated for an average respondent to respond;

(5) An estimate of the total public burden (in hours) associated with the collection; and,

(6) An indication as to whether section 3504(h) of Pub. L. 96–511 applies.

Comments and/or suggestions regarding the item(s) contained in this notice, especially regarding the estimated public burden and associated response time, should be directed to the OMB reviewer, Mr. Jeff Hill on (202) 395–7340 *and* to the Department of Justice's Clearance Officer, Mr. Robert B. Briggs, on (202) 514–4319. If you anticipate commenting on a form/collection, but find that time to prepare such comments will prevent you from prompt submission, you should notify the OMB reviewer *and* the Department of Justice Clearance Officer of your intent as soon as possible. Written comments regarding the burden estimate or any other aspect of the collection may be submitted to Office of Information and Regulatory Affairs, Office of Management and Budget, Washington, DC 20503, *and* to Mr. Robert B. Briggs, Department of Justice Clearance Officer, Systems Policy Staff/Information Resources Management/Justice Management Division Suite 850, WCTR, Washington, DC 20530.

Extension of a Currently Approved Collection

(1) Request for Verification of Naturalization.

(2) Form N–25. Immigration and Naturalization Service, United States Department of Justice.

(3) Primary: Individuals or households. Others: None. The information on Form N–25 is necessary to obtain verification from the courts that a person claiming to be a naturalized citizen has, in fact, been naturalized. When no other evidence is available the form will be used to validate a claim of being naturalized.

(4) 1,000 annual respondents at .25 (15 minutes) per hour per response.

(5) 250 annual burden hours.

(6) Not applicable under Section 3504(h) of Public Law 96–511.

Public comment on this item is encouraged.

Dated: July 13, 1995.

Robert B. Briggs,

Department Clearance Officer, United States Department of Justice.

[FR Doc. 95–17680 Filed 7–18–95; 8:45 am]

BILLING CODE 4410–10–M

Notice of Lodging of Consent Decree Pursuant to the Comprehensive Environmental Response, Compensation, and Liability Act

In accordance with Departmental policy, 28 CFR 50.7, notice is hereby given that a proposed Consent Decree in *United States* v. *A.F.F. McQuay, et al.*, Case No. 3,95–2023–0 was lodged on June 30, 1995, with the United States District Court for the District of South Carolina. This settlement agreement resolves the claims asserted by the United States in an enforcement action brought on behalf of the Environmental Protection Agency (''EPA'') against 30 Potentially Responsible Parties (''PRPs'') (referred to as the ''SEPCO Group'') pursuant to the Comprehensive Environmental Response, Compensation, and Liability Act (''CERCLA''), 42 U.S.C. 9601 *et seq.* The complaint alleges defendants are liable for CERCLA response costs incurred and to be incurred by the United States at the ''Carolawn Superfund Site,'' an approximately 60-acre property with an abandoned waste storage and disposal facility located near Fort Lawn, South Carolina. The Site was owned and operated as a waste storage and disposal facility by the now defunct Carolawn Company, Southeastern Pollution Control Company (''SEPCO''), and other prior owner/operators. Under the Consent Decree, the SEPCO Group shall pay $292,500 (63%) of the $465,000 in outstanding identified response costs associated with the remedial actions at the Site.

The Department of Justice will receive, for a period of thirty (30) days from the date of this publication, comments relating to the proposed Consent Decree. Comments should be addressed to the Assistant Attorney General for the Environment and Natural Resources Division, Department of Justice, Washington, D.C. 20530, and should refer to *United States* v. *A.F.F. McQuay, et al.*, 90–11–2–1A.

The proposed Consent Decree may be examined at the office of the United States Attorney, 1441 Main Street, Columbia, South Carolina, the Region IV office of the U.S. Environmental Protection Agency, 345 Courtland Street, NE, Atlanta, GA 30365, and at the Consent Decree Library, 1120 G Street, N.W., 4th Floor, Washington, D.C. 20005, (202) 624–0892. A copy of the proposed Consent Decree may be obtained in person or by mail from the Consent Decree Library, 1120 G Street, N.W., 4th Floor, Washington, D.C. 20005, (202) 624–0892. In requesting a copy, please refer to the referenced case and enclose a check in the amount of $12.50 (25 cents per page reproduction costs), payable to the Consent Decree Library.

Bruce S. Gelbar,

Acting Chief, Environment and Natural Resources Division.

[FR Doc. 95–17652 Filed 7–18–95; 8:45 am]

BILLING CODE 4410–01–M

Notice of Lodging of Consent Decree Pursuant to the Comprehensive Environmental Response Compensation and Liability Act of 1980 as Amended

In accordance with Department of Justice policy, 28 CFR 50.7, notice is hereby given that a proposed consent decree in *United States* v. *A.O.W. Capitol Associates, et al.*, Civil No. 95–3135 (MLP), was lodged on July 5, 1995 with the United States District Court for the District of New Jersey. The decree resolves claims of the United States against the defendants in the above-referenced action under the Comprehensive Environmental Response, Compensation, and Liability Act (''CERCLA'') for contamination at the Titan Lighting Superfund Site in Trenton, New Jersey (the ''Site''). In the proposed consent decree, the defendants agree to pay the United States $180,000 in settlement of the United States' claims for response costs

incurred by the Environmental Protection Agency at the Site.

The Department of Justice will receive, for a period of thirty (30) days from the date of this publication, comments relating to the proposed consent decree. Comments should be addressed to the Assistant Attorney General for the Environmental and Natural Resources Division, Department of Justice, Washington, D.C. 20530, and should refer to *United States* v. *A.O.W. Capitol Associates, et al.*, DOJ Ref. Number 90–11–3–1319.

The proposed consent decree may be examined at the Office of the United States Attorney, 402 E. State Street, Trenton, NJ 08608; the Region II Office of the Environmental Protection Agency, 290 Broadway, New York, NY 10278; and the Consent Decree Library, 1120 G Street, N.W., 4th Floor, Washington, D.C. 20005, (202) 624–0892. A copy of the proposed consent decree may be obtained in person or by mail from the Consent Decree Library, 1120 G Street, N.W. 4th Floor, Washington, D.C. 20005. In requesting a copy, please refer to the referenced case and enclose a check in the amount of $6.25 (25 cents per page reproduction costs), payable to the Consent Decree Library.

Bruce S. Gelber,

Acting Section Chief, Environmental Enforcement Section, Environment and Natural Resources Division.

[FR Doc. 95–17651 Filed 7–18–95; 8:45 am]

BILLING CODE 4410–01–M

Notice of Lodging of Consent Decree Pursuant to the Comprehensive Environmental Response, Compensation, and Liability Act of 1980

Notice is hereby given that a proposed consent decree in *United States* v. *Amtreco, Inc. et al*, Civil Action No. 90–31–VAL, was lodged on June 14, 1995 with the United States Court for the Middle District of Georgia. The Complaint, brought pursuant to Section 107 of the Comprehensive Environmental Response, Compensation, and Liability Act of 1980, as amended by the Superfund Amendments and Reauthorization Act of 1986 (''CERCLA''), 42 U.S.C. 9607, seeks recovery of past response costs incurred by the United States in connection with the Dickerson Post Superfund Site, Homerville, Georgia (the ''Site''). The Site is situated in Clinch County, Georgia, and occupies approximately 5.6 acres. The Site was used from 1977 until 1980 as a wood treatment plant.

The Consent Decree in *United States* v. *Amtreco, Inc. et al.* provides that AT&T Corporation, Western Electric Company, Inc. and Lee Engineering & Construction Company will pay a total of $140,500.

The Department of Justice will receive, for a period of thirty (30) days from the date of this publication, comments relating to the proposed consent decree. Comments should be addressed to the Assistant Attorney General for the Environment and Natural Resources Division, Department of Justice, Washington, D.C. 20530, and should refer to *United States* v. *Amtreco, Inc. et al*, DOJ Ref. #90–11–2–103B.

The proposed consent decree may be examined at the office of the United States Attorney, Middle District of Georgia, 433 Cherry Street, Macon, Georgia 31202; the Region IV Office of the Environmental Protection Agency, 345 Courtland Street, N.E., Atlanta, Georgia 30365; and at the Consent Decree Library, 1120 G Street, N.W., 4th Floor, Washington, D.C. 20005, (202) 624–0892. A copy of the proposed consent decree may be obtained in person or by mail from the Consent Decree Library, 1120 G Street, N.W., 4th Floor, Washington, D.C. 20005. In requesting a copy please refer to the referenced case and enclose a check in the amount of $4.75 (25 cents per page reproduction costs), payable to the Consent Decree Library.

Bruce S. Gelber,

Acting Chief, Environmental Enforcement Section, Environment and Natural Resources Division.

[FR Doc. 95–17657 Filed 7–18–95; 8:45 am]

BILLING CODE 4410–01–M

Notice of Lodging of Consent Decree Pursuant to the Clean Air Act

In accordance with Departmental policy, 28 CFR 50.7, notice is hereby given that on June 30, 1995, a proposed Consent Decree in *United States* v. *Bio-Energy Corporation*, Civil No. 95–327–JD, was lodged with the United States District Court for the District of New Hampshire to resolve this matter. The proposed Consent Decree concerns the alleged violation by Bio-Energy at its West Hopkinton facility of the Clean Air Act, 42 U.S.C. 7475, and the regulations for the Prevention of Significant Deterioration (''PSD'') found at 40 CFR 51.21, and incorporated into the New Hampshire State Implementation Plan at 40 CFR 51.1529. Bio-Energy constructed and operated a wood-fired boiler without obtaining a major source PSD permit.

Under the terms of the Consent Decree, Bio-Energy will pay a civil penalty of $100,000. Bio-Energy has installed equipment to reduce its carbon monoxide and particulate matter emissions. Bio-Energy agrees to maintain these improvements and comply with the terms of a permit to operate issued by the State of New Hampshire.

The Department of Justice will receive for a period of thirty (30) days from the date of this publication comments relating to the proposed Consent Decree. Comments should be addressed to the Assistant Attorney General of the Environment and Natural Resources Division, Department of Justice, Ben Franklin Station, Washington, DC 20044, and should refer to *United States* v. *Bio-Energy Corporation*, D.J. Ref. 90–5–2–1–1131.

The proposed Consent Decree may be examined at the Region 1 Office of the Environmental Protection Agency, One Congress Street, Boston, Massachusetts or the Office of the United States Attorney for the District of New Hampshire, 55 Pleasant Street, Concord, New Hampshire. Copies of the Consent Decree may be examined at the Environmental Enforcement Section Document Center, 1120 G Street NW., 4th Floor, Washington, DC 20005, (202) 624–0892. A copy of the proposed Consent Decree may be obtained in person or by mail from the Document Center. In requesting a copy, please refer to the referenced case and enclose a check in the amount of $3.00 (25 cents per page reproduction cost excluding attachments) made payable to Consent Decree Library.

Bruce Gelber,

Acting Section Chief, Environment and Natural Resources Division.

[FR Doc. 95–17656 Filed 7–18–95; 8:45 am]

BILLING CODE 4410–01–M

Notice of Lodging of Consent Decree Pursuant to the Resource Conservation and Recovery Act

In accordance with Departmental policy, 28 C.F.R. § 50.7, notice is hereby given that a proposed Settlement Agreement and Order in *United States* v. *Maiorano*, Case No. 87 C 4491, was lodged with the United States District Court for the Northern District of Illinois on July 7, 1995. The proposed Settlement Agreement and Order will resolve civil claims brought against Louis Maiorano, Sr. and Louis Maiorano, Jr. for failure to comply fully with orders previously issued by the District Court in the above-captioned action under the Resource Conservation

and Recovery Act, as amended, 42 U.S.C. § 6901 *et seq.*, relating to defendants' former Aero Plating Works facility in Chicago, Illinois. The proposed Settlement Agreement and Order requires defendants to pay $8,000 into an interest-bearing escrow account that will be used to pay costs of activities necessary to comply with applicable requirements for closure of the Aero Plating Works facility, where defendants at one time treated, stored or disposed or hazardous waste. Following a determination by the Illinois Environmental Protection Agency that closure of the facility has been satisfactorily completed, proceeds of the escrow account will used to reimburse closure costs incurred by the current owner of the facility once operated by defendants.

The Department of Justice will receive, for a period of thirty (30 days from the date of this publication, comments relating to the proposed Settlement Agreement and Order. Comments should be addressed to the Assistant Attorney General for the Environment and Natural Resources Division, Department of Justice, Washington, D.C. 20530, and should refer to *United States* v. *Maiorano*, Case No. C 87 4491 and the Department of Justice Reference No. 90–7–1–388A.

The proposed Settlement Agreement and Order may be examined at the Office of the United States Attorney, Northern District of Illinois, Everett McKinley Dirksen Building, 219 South Dearborn Street, Chicago, Illinois, and at U.S. EPA Region 5, Office of Regional Counsel, 200 West Adams, Chicago, Illinois; and at the Consent Decree Library, 1120 G Street, N.W. 4th Floor, Washington, D.C. 20005, 202–624–0892. A copy of the proposed Settlement Agreement and Order may be obtained in person or by mail from the Consent Decree Library, 1120 G Street, N.W., 4th Floor, Washington, D.C. 20005. In requesting a copy, please refer to the referenced case and enclose a check in the amount of $1.50 (24 cents per page reproduction costs), payable to the Consent Decree Library.

Bruce S. Gelber,

Environmental Enforcement Section, Environment and Natural Resources Division.

[FR Doc. 95–17654 Filed 7–18–95; 8:45 am]

BILLING CODE 4410–01–M

Notice of Lodging of Consent Decrees Under the Comprehensive Environmental Response, Compensation and Liability Act of 1980, as Amended

Notice is hereby given that two consent decrees in *United States* v. *U.S. Ecology, Inc., et al.*, Civ. Act. No. 95–58, were lodged with the United States District Court for the Eastern District of Kentucky on June 5, 1995. These consent decrees resolve claims by and against the United States arising under Sections 106 and 107 of the Comprehensive Environmental Response, Compensation and Liability Act of 1980, as amended, 42 U.S.C. 9606 and 9607, relating to the release and threatened release of hazardous substances at the Maxey Flats Disposal Site (the ''Site'') in Fleming County, Kentucky. The United States filed a complaint against the settling private parties and settling state parties simultaneously with the lodging of the consent decrees.

One consent decree, called the ''De Maximus Consent Decree,'' provides for the design and implementation of a remedy for the Site selected in 1991 by the United States Environmental Protection Agency (''EPA'') and for the reimbursement of $5.313 million in response costs incurred by EPA. Generally, the remedy requires the removal of leachate from the disposal trenches, the installation of a cap to prevent water from infiltrating the disposal trenches, and continual maintenance and supervision to ensure the safety of the site. The parties to the De Maximus Consent Decree are the United States, including EPA, the United States Air Force, the United States Army, the United States Navy, the United States Department of Defense, the United States Department of Energy, the National Institute of Health, and NASA; the Commonwealth of Kentucky; and forty three private parties.

The second consent decree, called the ''De Minimis Consent Decree,'' provides for the reimbursement of costs incurred by the United States and certain private parties in responding to the release and threatened release of hazardous substances at the Site. The parties to the De Minimis Consent Decree are the United States, including EPA, the Department of the Interior, the National Institute of Mental Health, the National Institute for Standards & Testing, NIOSH, Smithsonian Institute, U.S. Bureau of Mines, U.S. Department of Agriculture, U.S. Food & Drug Administration, U.S. Geological Survey, U.S. Public Health Service, and the Veterans Administration Hospital; and 391 private and state entities.

The Department of Justice will receive comments relating to the proposed consent decrees for a period of 30 days from the date of this publication. Comments should be addressed to the Assistant Attorney General of the Environment and Natural Resources Division, Department of Justice, 10th and Pennsylvania Avenue, N.W., Washington, D.C. 20530. All comments should refer to *United States* v. *U.S. Ecology, Inc., et al.*, DOJ Ref. Nos. 90–11–2–211A and 90–11–3–195.

The proposed consent decrees may be examined at the office of the United States Attorney, 513 Madison Avenue, Covington, Kentucky 41011. A copy of the proposed consent decrees may be obtained in person or by mail from the Consent Decree Library, 1120 ''G'' Street, N.W., 4th Floor, Washington, D.C. 20005. When requesting a copy of the De Maximus Consent Decree, please refer to the referenced case and enclose a check in the amount of $237.50 (25 cents per page copying cost), payable to the Consent Decree Library. When requesting a copy of the De Minimis Consent Decree, please refer to the referenced case and enclose a check in the amount of $101.00 (25 cents per page copying cost).

Bruce S. Gelber,

Acting Chief, Environmental Enforcement Section, Environment and Natural Resources Division.

[FR Doc. 95–17655 Filed 7–18–95; 8:45 am]

BILLING CODE 4410–01–M

DEPARTMENT OF LABOR

Office of the Secretary

Agency Recordkeeping/Reporting Requirements Under Review by the Office of Management and Budget (OMB)

July 13, 1995.

The Department of Labor has submitted the following public information collection requests (ICRs) to the Office of Management and Budget (OMB) for review and clearance under the Paperwork Reduction Act (44 U.S.C. Chapter 35) of 1980, as amended (Pub. L. 96–511). Copies may be obtained by calling the Department of Labor Acting Departmental Clearance Officer, Theresa M. O'Malley [(202) 219–5095). Comments and questions about the ICRs listed below should be directed to Ms. O'Malley, Office of Information Resources Management Policy, U.S. Department of Labor, 200 Constitution Avenue, NW., Room N–1301,

Washington, DC 20210. Comments should also be sent to the Office of Information and Regulatory Affairs, Attn: OMB Desk Officer for (BLS/DM/ESA/ETA/OAW/MSHA/OSHA/PWBA/VETS), Office of Management and Budget, Room 10325, Washington, DC 20503 ((202) 395–7316).

Individuals who use a telecommunications device for the deaf (TTY/TDD) may call (202) 219–4720 between 1 p.m. and 4 p.m. Eastern time, Monday through Friday.

Type of Review: Extension.

Agency: Mine Safety and Health Administration.

Title: Radiation Sampling and Exposure Records.

OMB Number: 1219–0003.

Frequency: Weekly; Annually.

Affected Public: Business or other for-profit.

Number of Respondents: 1,000.

Estimated Time Per Respondent: 7.75 hours.

Total Burden Hours: 7,750.

Description: Requires operators of uranium mines and metal and nonmetal mines, where concentrations of radon daughters exceeds 0.3 WL, to calculate, record, and report to the Mine Safety and Health Administration (MSHA) individual miner's exposures to concentrations of radon daughters. Records are maintained by the mine operator and are submitted to MSHA annually.

Type of Review: Extension.

Agency: Mine Safety and Health Administration.

Title: Notification of Legal Identity.

OMB Number: 1219–0008.

Agency Number: MSHA Form 2000–7.

Frequency: On occasion.

Affected Public: Business or other for-profit.

Number of Respondents: 36,500.

Estimated Time Per Respondent: 30 minutes.

Total Burden Hours: 3,325.

Description: Requires mine operators to file with MSHA the name and address of the mine and the name and address of the persons who control and operate the mine, and any revisions of such names and addresses. The information is used to identify persons chargeable with violations of safety and health standards, in the assessment of civil penalties, and in the service of legal documents.

Type of Review: Extension.

Agency: Mine Safety and Health Administration.

Title: Refuse Piles and Impoundment Structures.

OMB Number: 1219–0015.

Agency Number: MSHA 250.

Affected Public: Business or other for-profit.

Reporting/Recordkeeping.

Requirement	Respondents	Frequency	Average time per response (hours)
Fire Extinguishing Plans.	10	Annually .	4
Abandonment Plans.	20	Annually .	8
Impoundment and Refuse Pile Plans and Revisions			
New Impoundment Plans.	60	Annually .	1,300
Revised Plans.	100	Annually .	5
New Refuse Piles.	50	Annually .	16
Annual Status Report and Certification.	325	Annually .	2
Weekly Inspections with Monitoring Instruments.	300	Weekly ...	3
Weekly Inspections without Monitoring Instruments.	450	Weekly ...	2

Total Burden Hours: 110,750.

Description: Requires coal mine operators to submit to MSHA an annual status report and certification on impoundments and hazardous refuse piles; and to keep records of the results of weekly examinations and instrumentation monitoring of impoundments.

Type of Review: Extension.

Agency: Mine Safety and Health Administration.

Title: Operations Under Water.

OMB Number: 1219–0020.

Frequency: On occasion.

Affected Public: Business or other for-profit.

Number of Respondents: 30.

Estimated Time Per Respondent: 5 hours.

Total Burden Hours: 150.

Description: Requires coal mine operators to obtain a permit to mine under a body of water if, in the judgment of the Secretary of Labor, it is sufficiently large enough to constitute a hazard to miners.

Type of Review: Extension.

Agency: Mine Safety and Health Administration.

Title: Application for Waiver of Surface Facilities Requirement.

OMB Number: 1219–0024.

Frequency: On occasion.

Affected Public: Business or other for-profit.

Number of Respondents: 1,726.

Estimated Time Per Respondents: 3 minutes.

Total Burden Hours: 863.

Description: Coal mine operators are required to provide bathing facilities, clothing change rooms, and sanitary toilet facilities in a location that is convenient for use of the miners. These regulations provide procedures by which an operator may apply for and be granted a waiver or extension of waiver.

Type of Review: Reinstatement.

Agency: Mine Safety and Health Administration.

Title: Application for Use of Nonpermissible Explosives and Nonpermissible Shot-Firing Units.

OMB Number: 1219–0025

Frequency: On occasion.

Affected Public: Business or other for-profit.

Number of Respondents: 75.

Estimated Time Per Respondents: 1 hour.

Total Burden Hours: 75.

Description: Coal mine operators may apply for and be granted a permit to use nonpermissible explosives and nonpermissible shot-firing units. Applications contain the safeguards the mine operator is going to employ to protect the miners while using nonpermissible blasting items.

Type of Review: Extension.

Agency: Mine Safety and Health Administration.

Title: Records of Tests and Examinations of Personnel Hoisting Equipment.

OMB Number: 1219–0034

Frequency: Daily; biweekly; bimonthly; semi-annually.

Affected Public: Business or other for-profit.

Number of Respondent: 545.

Type	Respondents	Estimated time per respondent (hours)
Daily and biweekly examinations	545	1.05
Initial and semiannual wire rope measurements	545	1.15
Bimonthly tests of safety catches	368	1.15

Total Burden Hours: 32,406

Description: Requires operators of coal and metal and nonmetal mines to keep records of specific tests and examinations of mine personnel hoisting systems, including wire ropes, to ensure that the systems remain safe to operate.

Type of Review: Extension.
Agency: Mine Safety and Health Administration.
Title: Noise Data Report Form and Calibration Records.
OMB Number: 1219–0037.
Frequency: Semi-annually; annually.
Affected Public: Business or other for-profit.

Type	Respondents	Estimated time per response (minutes)
Periodic surveys	253,440	21
Supplemental surveys	1,267	15
Survey/compl certs	2,534	6
Survey report	1,267	6
Calibration reports	4,300	3

Total Burden Hours: 89,616.
Description: Requires coal mine operators to report to MSHA when noise exposure surveys show noncompliance with permissible levels. Records are also required to be kept at the mine of when and by whom noise dosimeters and acoustical calibrators are recalibrated.

Type of Review: Extension.
Agency: Mine Safety and Health Administration.
Title: Escape and Evacuation Plans.
OMB Number: 1219–0046.
Frequency: Semi-annually.
Affected Public: Business or other for-profit.
Number of Respondents: 315.
Estimated Time Per Respondent: 8 hours.
Total Burden Hours: 7,560.
Description: Requires operators of underground coal mines to keep records of the results of mandatory weekly examinations of emergency escapeways. The records are used to determine that the integrity of the escapeways is being maintained.

Type of Review: Extension.
Agency: Mine Safety and Health Administration.
Title: Record of all Certified and Qualified Persons.
OMB Number: 1219–0049.
Frequency: Quarterly.
Affected Public: Business or other for-profit.
Number of Respondents: 18,580.
Estimated Time Per Respondent: 5 minutes.
Total Burden Hours: 1,542.
Description: Requires coal mine operators to maintain a list of persons who are certified and those who are qualified to perform duties which require specialized expertise at underground and surface coal mines. The recorded information is necessary to ensure that only persons who are properly trained and have the required experience are permitted to perform these duties.

Type of Review: Extension.
Agency: Mine Safety and Health Administration.
Title: Record of Mine Closure.
OMB Number: 1219–0073.
Frequency: On occasion.
Affected Public: Business or other for-profit.
Number of Respondents: 1,000.
Estimated Time Per Respondent: 2 hours.
Total Burden Hours: 2,000.
Description: Requires that, whenever coal mine operators permanently close or abandon a coal mine or temporarily close a coal mine for a period of 90 days, they file with MSHA a copy of the mine map which is revised and supplemented to the date of closure. Maps are retained in a repository and are made available to mine operators of adjacent properties.

Type of Review: Extension.
Agency: Mine Safety and Health Administration.
Title: Applications for Approval of Sanitary Toilet Facilities.
OMB Number: 1219–0101.
Frequency: On occasion.
Affected Public: Business or other for-profit.
Number of Respondents: 2.
Estimated Time Per Respondent: 8 hours.
Total Burden Hours: 16.
Description: Requires manufacturers of sanitary toilet facilities to obtain MSHA approval of units prior to use at coal mine operations. Approval of the facilities is required to ensure a healthier environment for miners.

Theresa M. O'Malley,
Acting Departmental Clearance Officer.
[FR Doc. 95–17733 Filed 7–18–95; 8:45 am]
BILLING CODE 4510–43–M

Employment and Training Administration

[TA–W–29,504]

ALSCO Amerimark Building Products, Gnadenhutten, Ohio; Negative Determination on Remand

On April 7, 1995 the United States Court of International Trade (USCIT) granted the Secretary's motion for a voluntary remand in *United Steelworkers of America, AFL–CIO–CLC, Local 4612* v. *Secretary of Labor* No. 94–11–00698.

The workers filing under petition TA–W–29,504 were initially denied eligibility to apply for trade adjustment assitance (''TAA'') on June 20, 1994, 59 FR 33786 (1994) and denied on application for reconsideration on September 16, 1994, 59 FR 49259 (1994).

The investigation findings showed that the plant melted scrap aluminum cans and rolled the aluminum into coils which were then painted. The smelter and rolling mill closed in December 1993.

The United Steelworkers of America (''USWA'') and its Local 4612 claim that imports of Russian aluminum ingots and coil affected the pricing of aluminum coil.

In its notice of negative determination regarding the USWA, Local 4612 application for reconsideration, the Department found that the articles produced by workers at Alsco Amerimark Building Products (''Amerimark'') are coated or painted aluminum coil, not aluminum ingots or aluminum coil. Accordingly, the Department investigated whether imports of coated aluminum coil contributed importantly to the worker separations and Amerimark's decline in sales.

The Department's denial was based on the fact that the ''contributed importantly'' test of the Worker Group Eligibility Requirements of the Trade Act was not met. The ''contributed importantly'' test is generally demonstrated through a survey of the workers' firm's customers. The Department surveyed Amerimark's major customers for their purchases of painted aluminum coil for the years 1992, 1993, and the January-May time period of 1993 and 1994. None of the respondents reported decreasing their purchases from the subject firm while increasing their purchases of imports in the relevant period.

Other findings showed that Amerimark did not purchase ingots (foreign or domestic) for use in its production process for coated aluminum coil but purchased scrap aluminum cans.

On remand, the Department broadened its investigation to determine whether imports of aluminum coil met the ''contributed importantly'' test.

The new findings show that Amerimark's Gnadenhutten, Ohio aluminum smelting and rolling mill operation supplied the source of coils

for the final phase of production, coating or painting, until the closure of the smelter and rolling mill in December 1993.

Other findings show that once the smelting operations ceased, Amerimark produced the painted coils from domestically sourced aluminum sheet.[1] The Department conducted a survey of Amerimark's major suppliers to determine if the aluminum sheet sold to Amerimark in the last three years was produced domestically or obtained from outside sources. The respondents reported that they produced all aluminum sheet sold to Amerimark themselves, and did not purchase any of this aluminum sheet from other domestic sources.

The value of U.S. imports of aluminum plate, sheet and strip increased from 1992 to 1993, and in the first five months of 1994 compared to the first five months of 1993. Statistical data on U.S. imports as a whole, however, would not determine whether the Amerimark workers lost their jobs as a result of increased imports. Instead, this determination is made by surveying Amerimark's major customers to see whether they reduced their purchases of Amerimark products while increasing their imports of aluminum sheet during the period in question.

Customer survey findings show that the Amerimark customers that purchased painted aluminum coils from Amerimark, purchased aluminum sheet from other domestic sources. One customer indicated purchases of aluminum sheet from doemstic sources and from brokers for foreign firms. However, this same customer increased its purchases of painted aluminum coil from Amerimark in 1993 compared to 1992, and in the first five months of 1994 compared to the first five months of 1993. Business Confidential Administrative Record at 105. Consequently, increased imports could not have contributed importantly to the workers' separations and Amerimark's deline in sales because Amerimark's major customers either did not import articles like or directly competitive with Amerimark's products, or increased their purchases of Amerimark's products while importing foreign goods.

Conclusion

After review of the new investigative findings, I conclude that the determination was correct. Accordingly, the Amerimark workers' petition for trade adjustment assistance is denied.

Signed at Washington, DC, this 7th day of July 1995.

Victor J. Trunzo,

Program Director, Policy and Reemployment Services, Office of Trade Adjustment Assistance.

[FR Doc. 95–17736 Filed 7–18–95; 8:45 am]

BILLING CODE 4510–30–M

Investigations Regarding Certifications of Eligibility To Apply for Worker Adjustment Assistance

Petitions have been filed with the Secretary of Labor under section 221(a) of the Trade Act of 1974 (''the Act'') and are identified in the Appendix to this notice. Upon receipt of these petitions, the Director of the Office of Trade Adjustment Assistance, Employment and Training Administration, has instituted investigations pursuant to section 221(a) of the Act.

The purpose of each of the investigations is to determine whether the workers are eligible to apply for adjustment assistance under Title II, Chapter 2, of the Act. The investigations will further relate, as appropriate, to the determination of the date on which total or partial separations began or threatened to begin and the subdivision of the firm involved.

The petitioners or any other persons showing a substantial interest in the subject matter of the investigations may request a public hearing, provided such request is filed in writing with the Director, Office of Trade Adjustment Assistance, at the address shown below, not later than July 31, 1995.

Interested persons are invited to submit written comments regarding the subject matter of the investigations to the Director, Office of Trade Adjustment Assistance, at the address shown below, not later than July 31, 1995.

The petitions filed in this case are available for inspection at the Office of the Director, Office of Trade Adjustment Assistance, Employment and Training Administration, U.S. Department of Labor, 200 Constitution Avenue, NW., Washington, DC 20210.

Signed at Washington, DC, this 10th day of July, 1995.

Victor J. Trunzo,

Program Manager, Policy and Reemployment Services, Office of Trade, Adjustment Assistance.

Appendix

PETITIONS INSTITUTED ON 07/10/95

TA–W	Subject firm (petitioners)	Location	Date of petition	Product(s)
31,214	Buddy L Inc. (Wkrs)	Gloversville, NY	06/26/95	Steel Wall Swimming Pools
31,215	Buddy L Inc. (Wkrs)	Gloversville, NY	06/26/95	Steel Wall Swimming Pools
31,216	Buddy L Inc. (Wkrs)	Mayfield, NY	06/26/95	Steel Wall Swimming Pools
31,217	Buddy L Inc. (Wkrs)	New York, NY	06/26/95	Steel Wall Swimming Pools
31,218	Dana Corp. (Wkrs)	Corinth, MS	06/23/95	Hydraulic Pumps
31,219	Geneva Steel (USWA)	Provo, UT	06/26/95	Steel
31,220	Stride-Rite Corp (UFCW)	Fulton, MO	06/29/95	Sandals
31,221	M. Lidz, Inc. (Co)	Wilkes-Barre, PA	06/26/95	Supplies Sewing Thread
31,222	Pamco Shoe Machinery Co (Wkrs)	Lewiston, ME	06/22/95	Shoe Machinery
31,223	T & W Forge, Inc. (BBF)	Alliance, OH	06/23/95	Connecting Rods & Camshafts
31,224	R Manufacturing (Wkrs)	Lilly, PA	06/23/95	Dresses & Ladies' Suits
31,225	Mason Shoe (UFCW)	Chippewa Falls, WI	06/27/95	Ladies' & Mens' Shoes
31,226	American Steel Corp. (Wkrs)	Detroit, MI	06/21/95	Steel
31,227	CMI Industries, Inc (Wkrs)	Rolling Fork, MS	06/26/95	Elastic Fabric
31,228	E-Systems (Wkrs)	Greenville, TX	06/27/95	Aircraft Modifications
31,229	Powerex, Inc. (IBEW)	Youngwood, PA	06/01/95	Power Semiconductors

[1] In accordance with industry practice, the term ''aluminum sheet'' is used interchangeably with ''aluminum coil'' here.

[FR Doc. 95–17735 Filed 7–18–95; 8:45 am]
BILLING CODE 4510–30–M

Determinations Regarding Eligibility To Apply for Worker Adjustment Assistance and NAFTA Transitional Adjustment Assistance

In accordance with section 223 of the Trade Act of 1974, as amended, the Department of Labor herein presents summaries of determinations regarding eligibility to apply for trade adjustment assistance for workers (TA–W) issued during the period of July, 1995.

In order for an affirmative determination to be made and a certification of eligibility to apply for worker adjustment assistance to be issued, each of the group eligibility requirements of section 222 of the Act must be met.

(1) That a significant number or proportion of the workers in the workers' firm, or an appropriate subdivision thereof, have become totally or partially separated,

(2) That sales or production, or both, of the firm or subdivision have decreased absolutely, and

(3) That increases of imports of articles like or directly competitive with articles produced by the firm or appropriate subdivision have contributed importantly to the separations, or threat thereof, and to the absolute decline in sales or production.

Negative Determinations for Worker Adjustment Assistance

In each of the following cases the investigation revealed that criterion (3) has not been met. A survey of customers indicated that increased imports did not contribute importantly to worker separations at the firm.

TA–W–31,007; GE Control Products (GECP), Carroll, IA

TA–W–30,996; Luna Creations, Providence, RI

In the following cases, the investigation revealed that the criteria for eligibility have not been met for the reasons specified.

TA–W–31,180; Spiegel, Inc., Bensenville, IL

Increased imports did not contribute importantly to worker separations at the firm.

TA–W–31,179 & A; Spiegel, Inc., 39th St (Pershing Road), Chicago, IL & 35th St., Chicago, IL

Increased imports did not contribute importantly to worker separations at the firm.

TA–W–31,046; Ingersoll Dresser Pump Co., Phillipsburg, NJ

Aggregate U.S. imports of oil production pumps are negligible.

TA–W–30,984; Chun King Corp., Cambridge, MD

During early 1995, the parent company made a business decision to shutdown its Cambridge, MD facility and transfer its production of Oriental foods to an existing domestic plant.

TA–W–30,970; Kennecott Utah Copper, Bingham Canyon, UT

TA–W–30,971; Kennecott Smelter Div., Salt Lake City, UT

TA–W–309,972; Kennecott Refinery Div., Salt Lake City, UT

U.S. imports of copper declined absolutely and relative to US production in 1994 compared to 1993.

TA–W–31,140; Western Gas Resources, Houston, TX & Operating at Various Locations in the Following States: A; CO, B; KS C; LA, D; MT, E; NM, F; ND, G; OK, H; TX, I; UT, J; WY

The investigation revealed that criterion (2) and (3) have not been met. Sales or production did not decline during the relevant period as required for certification. Increases of imports of articles like or directly competitive with articles produced by the firm or appropriate subdivision have not contributed importantly to the separations or threat thereof, and the absolute decline in sales or production.

TA–W–30,986; Vargo Logging, Inc., Superior, MT

The workers' firm does not produce an article as required for certification under Section 222 of the Trade Act of 1974.

TA–W–31,071; Pittston Coal Co., McClure #1, Mone, McClure, VA

U.S. imports of coal were negligible throughout the period. The ratio of imports to U.S. production is less than one percent.

TA–W–31,039; Lockley Manufacturing Group, New Castle, PA

Increased imports did not contribute importantly to worker separations at the firm.

TA–W–31,181; Trico Industries, Bradford Manufacturing Shop, Bradford, PA

Aggegate U.S. imports of oil well pumps are negligible during the relevant period.

TA–W–31,137; Carter-Wallace, Inc., Wampole Div., East Windsor, NJ

Production was transferred domestically during the relevant period.

Affirmative Determinations for Worker Adjustment Assistance

TA–W–31,146; Olivetti North America, Department 126, Hardware & Quality Assurance, Liberty Lake, WA

A certification was issued covering all workers separated on or after June 6, 1994.

TA–W–31,139; Macclenny Products, Inc., Macclenny, FL

A certification was issued covering all workers separated on or after June 3, 1994.

TA–W–31,025; McDonnell Douglas Aerospace, Monrovia, CA

A certification was issued covering all workers separated on or after March 15, 1995.

TA–W–31,123; N.B. Co., Inc., Emphasis Oil Operations, Russell, KS & Various Locations in the State of CO

A certification was issued covering all workers separated on or after Mary 31, 1994.

TA–W–30,980; The Boeing Co., Commercial Airplane Group, Headquartered in Seattle, WA & at Various Locations in the State of WA

A certification was issued covering all workers separated on or after April 20, 1994.

TA–W–30,949; Heritage Springfield, Inc., Holyoke, MA

A certification was issued covering all workers separated on or after April 10, 1994.

TA–W–31,118; Lockhart Plant, Milliken & Co., Spartanburg, SC

A certification was issued covering all workers separated on or after May 24, 1994.

TA–W–30,989 & A; Duncan Energy Co., Denver, CO and Houston, TX

A certification was issued covering all workers separated on or after August 5, 1994.

TA–W–31,067; UMC Petroleum Corp., Headquartered in Houston, TX & at Various Other Locations in the Following States: A; AR, B; CA, C; KS, D; LA, E; MS, F; NM, G; OK, H; TX, I; WY

A certification was issued covering all workers separated on or after May 18, 1994.

TA–W–31,114; Pennzoil Exploration & Production Co., Midland, TX

A certification was issued covering all workers separated on or after May 17, 1994.

TA–W–31,166; Fabric Cutters, Inc., Floyd, VA

A certification was issued covering all workers separated on or after May 31, 1994.

TA–W–31,159; Riley Stoker Corp., Div. of DB Riley Consolidated, Inc., Erie, PA

A certification was issued covering all workers separated on or after May 2, 1994.

TA–W–31,170; Gateway Safety Systems, Michigan City, IN

A certification was issued covering all workers separated on or after June 9, 1993.

TA–W–31,098; King Finishing Div. of Spartan Mills, Statesboro, GA

A certification was issued covering all workers separated on or after May 15, 1994.

TA–W–31,116; Kraft General Foods, Kankakee, IL

A certification was issued covering all workers separated on or after May 17, 1994.

TA–W–31,163; CR & ME Ltd, Linden, NJ

A certification was issued covering all workers separated on or after June 6, 1994.

TA–W–31,073 & TA–W–31,074; Timberland Manufacturing, Inc., Boone, NC and Mountain City, TN

A certification was issued covering all workers separated on or after May 30, 1994.

TA–W–31,088; Exeter Drilling, Denver, CO

A certification was issued covering all workers separated on or after May 15, 1994.

TA–W–31,063; AMSCO International, Erie, PA

A certification was issued covering all workers separated on or after May 5, 1994.

TA–W–31,128; NETP, Inc., Niagara Falls, NY

A certification was issued covering all workers separated on or after May 30, 1994.

TA–W–31,083; R.J. Mfg Co., York, PA

A certification was issued covering all workers separated on or after May 15, 1994.

TA–W–31,149 & TA–W–31,150; SCT Yarns, Inc., Jefferson, GA and Piedmont, AL

A certification was issued covering all workers separated on or after June 6, 1994.

TA–W–31,097; Seagull Energy Corp., Mid Continent Region, Amarillo, TX

A certification was issued covering all workers separated on or after May 18, 1994.

TA–W–31,156; Sporteens, Inc., Moonachie, NJ

A certification was issued covering all workers separated on or after June 2, 1994.

TA–W–31,087; Crown Pacific Inland Lumber, Thompson Falls, MT

A certification was issued covering all workers separated on or after May 15, 1994.

TA–W–31,113; Tippens Apparel Trim, Inc., Conley, GA

A certification was issued covering all workers separated on or after May 22, 1994.

TA–W–30,979; Unitcast Corp., Toledo, OH

A certification was issued covering all workers separated on or after April 21, 1994.

TA–W–31,018; Dietrich Industries, Inc., Blairsville, PA

A certification was issued covering all workers separated on or after April 17, 1994.

TA–W–30,973; Esselte Pendaflex Corp., Syracuse, NY

A certification was issued covering all workers separated on or after April 19, 1994.

TA–W–31,079 & TA–W–31,080; Picker International, Inc., Cleveland, OH & Pittsburgh, PA

A certification was issued covering all workers separated on or after May 13, 1994.

TA–W–30,988; C. Walker & Co., Corning, AR

A certification was issued covering all workers separated on or after April 20, 1994.

TA–W–31,103; T.T. Fabric Sales, Inc., New York, NY

A certification was issued covering all workers separated on or after May 22, 1994.

TA–W–31,041; Overton Shirt Makers, Livingston, TN

A certification was issued covering all workers separated on or after May 1, 1994.

Also, pursuant to Title V of the North American Free Trade Agreement Implementation Act (P.L. 103–182) concerning transitional adjustment assistance hereinafter called (NAFTA–TAA) and in accordance with Section 250(a) Subchapter D, Chapter 2, Title II, of the Trade Act as amended, the Department of Labor presents summaries of determinations regarding eligibility to apply for NAFTA–TAA issued during the month of July, 1995.

In order for an affirmative determination to be made and a certification of eligibility to apply for NAFTA–TAA the following group eligibility requirements of Section 250 of the Trade Act must be met:

(1) That a significant number or proportion of the workers in the workers' firm, or an appropriate subdivision thereof, (including workers in any agricultural firm or appropriate subdivision thereof) have become totally or partially separated from employment and either—

(A) That sales or production, or both, of such firm or subdivision have decreased absolutely,

(B) That imports from Mexico or Canada of articles like or directly competitive with articles produced by such firm or subdivision have increased.

(C) That the increase in imports contributed importantly to such workers' separations or threat of separation and to the decline in sales or production of such firm or subdivision; or

(2) That there has been a shift in production by such workers' firm or subdivision to Mexico or Canada of articles like or directly competitive with articles which are produced by the firm or subdivision.

Negative Determinations NAFTA–TAA

NAFTA–TAA–00468; Bear Cat Logging, Inc., Klamath Falls, OR

The investigation revealed that criteria (3) and (4) were not met. A departmental survey conducted with major customers revealed that although they declined their purchases of contract hauling services, they have not increased purchases from any other domestic or foreign source.

NAFTA–TAA–00471; Tippens Apparel Trim, Inc., Conley, GA

The investigation revealed that criteria (3) and (4) were not met. A departmental survey was conducted with major customers. The survey revealed that the major customers decreased their purchases of apparel belts from Tippens Apparel Trim, Inc. while increasing purchases from other domestic and foreign sources.

NAFTA–TAA–00465; Owens-Brockway Glass Container Corp., Pomona, CA

The investigation revealed that criteria (3) and (4) were not met. Major customers of the subject firm surveyed regarding their purchases of glass containers reported that they did not import the product in question from Mexico or Canada.

NAFTA–TAA–00472; West State, Inc., Portland, OR

Prior to entering Chapter 7 bankruptcy in October 1994, West State, Inc. repaired tankships at the Port of Portland ship repair yard for a major oil

company. Repair work done for that oil company since West State's bankruptcy has all been performed at US shipyards. Therefore, workers cannot be considered to have been adversely impacted by a shift in production to Canada or Mexico or by imports from those countries.

NAFTA–TAA–00475; Dante Fashions Corp., Jeannette, PA

The investigation revealed that criteria (3) and (4) were not met. Survey results revealed that customers do not import articles like or directly competitive with women's apparel from Canada or Mexico.

NAFTA–TAA–00482; Bill Neubert Log, Inc., Klamath Falls, OR

The investigation revealed that criteria (3) and (4) were not met. The investigation revealed that the customer to whom Bill Neubert Log, Inc. supplied contract logging did not import contract logging from Canada or Mexico.

NAFTA–TAA–00483; B & G Equipment Co., Plumsteadville, PA

The investigation revealed that criteria (3) and (4) were not met. A survey conducted with a major customer of consumer plastic sprayers revealed decreased purchases from the B&G Equipment Co. Also, this customer has not directly or indirectly purchased consumer plastic sprayers from Canada, Mexico or any other foreign source.

NAFTA–TAA–00487; Palliser Grain Co., Ltd., United States Office Great Falls, MT

The investigation revealed that the workers of Palliser Grain Co., Ltd, Great Falls, MT do not produce an article within the meaning of Section 2509(a) of the Trade Act, as amended.

Affirmative Determination NAFTA–TAA

NAFTA–TAA–00473; Cowlitz Stud Co., Randle & Morton Div., Randle, WA

A certification was issued covering all workers at Randle & Morton Divisions of Cowlitz Stud Co, Randle and Morton, WA separated on or after May 24, 1994.

NAFTA–TAA–00470; Seagull Energy Corp./Midcon, Inc., Amarillo, TX

A certification was issued covering all workers at Seagull Energy Corp./Midcon, Inc., Amarillo, TX separated on or after May 15, 1994.

NAFTA–TAA–00469; Planergy New York, Inc., East Syracuse, NY

A certification was issued covering all workers at Planergy New York, Inc., East Syracuse, NY separated on or after May 23, 1994.

NAFTA–TAA–00467; Vernitron Corp., St. Petersburg, FL

A certification was issued covering all workers at VERNITRON/VRN International, St. Petersburg, FL separated on or after May 22, 1994.

NAFTA–TAA–00500; Occidental Chemical Corp., Durez Div., North Tonawanda, NY

A certification was issued covering all workers engaged in the production of phenolic molding compounds at the Occidental Chemical Corp., North Tonawanda, NY separated on or after May 30, 1994.

NAFTA–TAA–00494 & A; Miniature Precision Components, Inc., Walworth, WI & Prairie De Chien, WI

A certification was issued covering all workers at the Miniature Precision Components, Inc., Walworth and Prairie De Chien, WI separated on or after June 20, 1994.

NAFTA–TAA–00477 & A, B, C; Crown Pacific Limited Partnership, Colburn Unit, Sandpoint, ID, Bonners Ferry ID, Thompson Falls, MT, & Operating in the States of ID, MT and WA

A certification was issued covering all workers of Crown Pacific Limited Partnership, Sandpoint and Bonners Ferry, ID & Thompson Falls, MT and other locations operating in ID, MT and WA separated on or after May 25, 1994.

NAFTA–TAA–00504; Nashua Corp., Nashua Cartridge Products, Inc., Exeter, NH

A certification was issued covering all workers of Nashua Cartridge Products, Inc., of the Nashua Corp, Exeter, NH separated on or after June 23, 1994.

NAFTA–TAA–00486 A, B; Equitable Resources Energy Co., Equitable Resources Exploration Div., Kingsport, TN, Nora VA and Hazard, KY

A certification was issued covering all workers at the Equitable Resources Exploration Div. of the Equitable Resources Energy Co., Kingsport, TN, Hazard, KY and Nora, VA separated on or after June 12, 1994.

NAFTA–TAA–00498; Takata, Inc, Gateway Safety Systems, Michigan City, IN

A certification was issued covering all workers at the Gateway Safety Systems division of Takata, Inc., Michigan City, IN separated on or after June 15, 1994.

I hereby certify that the aforementioned determinations were issued during the month of July, 1995. Copies of these determinations are available for inspection in Room C–4318, U.S. Department of Labor, 200 Constitution Avenue, NW., Washington, DC 20210 during normal business hours or will be mailed to persons who write to the above address.

Dated: July 12, 1995.

Victor J. Trunzo,

Program Manager, Policy & Reemployment Services, Office of Trade, Adjustment Assistance.

[FR Doc. 95–17734 Filed 7–18–95; 8:45 am]

BILLING CODE 4510–30–M

NUCLEAR REGULATORY COMMISSION

Biweekly Notice

Applications and Amendments to Facility Operating Licenses Involving No Significant Hazards Considerations

I. Background

Pursuant to Public Law 97-415, the U.S. Nuclear Regulatory Commission (the Commission or NRC staff) is publishing this regular biweekly notice. Public Law 97-415 revised section 189 of the Atomic Energy Act of 1954, as amended (the Act), to require the Commission to publish notice of any amendments issued, or proposed to be issued, under a new provision of section 189 of the Act. This provision grants the Commission the authority to issue and make immediately effective any amendment to an operating license upon a determination by the Commission that such amendment involves no significant hazards consideration, notwithstanding the pendency before the Commission of a request for a hearing from any person.

This biweekly notice includes all notices of amendments issued, or proposed to be issued from June 23, 1995, through July 7, 1995. The last biweekly notice was published on July 5, 1995 (60 FR 35058).

Notice Of Consideration Of Issuance Of Amendments To Facility Operating Licenses, Proposed No Significant Hazards Consideration Determination, And Opportunity For A Hearing

The Commission has made a proposed determination that the following amendment requests involve no significant hazards consideration. Under the Commission's regulations in 10 CFR 50.92, this means that operation of the facility in accordance with the proposed amendment would not (1) involve a significant increase in the probability or consequences of an accident previously evaluated; or (2) create the possibility of a new or different kind of accident from any accident previously evaluated; or (3) involve a significant reduction in a margin of safety. The basis for this proposed determination for each amendment request is shown below.

The Commission is seeking public comments on this proposed determination. Any comments received within 30 days after the date of publication of this notice will be considered in making any final determination.

Normally, the Commission will not issue the amendment until the expiration of the 30-day notice period. However, should circumstances change during the notice period such that failure to act in a timely way would result, for example, in derating or shutdown of the facility, the Commission may issue the license amendment before the expiration of the 30-day notice period, provided that its final determination is that the amendment involves no significant hazards consideration. The final determination will consider all public and State comments received before action is taken. Should the Commission take this action, it will publish in the **Federal Register** a notice of issuance and provide for opportunity for a hearing after issuance. The Commission expects that the need to take this action will occur very infrequently.

Written comments may be submitted by mail to the Rules Review and Directives Branch, Division of Freedom of Information and Publications Services, Office of Administration, U.S. Nuclear Regulatory Commission, Washington, DC 20555, and should cite the publication date and page number of this **Federal Register** notice. Written comments may also be delivered to Room 6D22, Two White Flint North, 11545 Rockville Pike, Rockville, Maryland from 7:30 a.m. to 4:15 p.m. Federal workdays. Copies of written comments received may be examined at the NRC Public Document Room, the Gelman Building, 2120 L Street, NW., Washington, DC. The filing of requests for a hearing and petitions for leave to intervene is discussed below.

By August 18, 1995, the licensee may file a request for a hearing with respect to issuance of the amendment to the subject facility operating license and any person whose interest may be affected by this proceeding and who wishes to participate as a party in the proceeding must file a written request for a hearing and a petition for leave to intervene. Requests for a hearing and a petition for leave to intervene shall be filed in accordance with the Commission's ''Rules of Practice for Domestic Licensing Proceedings'' in 10 CFR Part 2. Interested persons should consult a current copy of 10 CFR 2.714 which is available at the Commission's Public Document Room, the Gelman Building, 2120 L Street, NW., Washington, DC and at the local public document room for the particular facility involved. If a request for a hearing or petition for leave to intervene is filed by the above date, the Commission or an Atomic Safety and Licensing Board, designated by the Commission or by the Chairman of the Atomic Safety and Licensing Board Panel, will rule on the request and/or petition; and the Secretary or the designated Atomic Safety and Licensing Board will issue a notice of a hearing or an appropriate order.

As required by 10 CFR 2.714, a petition for leave to intervene shall set forth with particularity the interest of the petitioner in the proceeding, and how that interest may be affected by the results of the proceeding. The petition should specifically explain the reasons why intervention should be permitted with particular reference to the following factors: (1) the nature of the petitioner's right under the Act to be made a party to the proceeding; (2) the nature and extent of the petitioner's property, financial, or other interest in the proceeding; and (3) the possible effect of any order which may be entered in the proceeding on the petitioner's interest. The petition should also identify the specific aspect(s) of the subject matter of the proceeding as to which petitioner wishes to intervene. Any person who has filed a petition for leave to intervene or who has been admitted as a party may amend the petition without requesting leave of the Board up to 15 days prior to the first prehearing conference scheduled in the proceeding, but such an amended petition must satisfy the specificity requirements described above.

Not later than 15 days prior to the first prehearing conference scheduled in the proceeding, a petitioner shall file a supplement to the petition to intervene which must include a list of the contentions which are sought to be litigated in the matter. Each contention must consist of a specific statement of the issue of law or fact to be raised or controverted. In addition, the petitioner shall provide a brief explanation of the bases of the contention and a concise statement of the alleged facts or expert opinion which support the contention and on which the petitioner intends to rely in proving the contention at the hearing. The petitioner must also provide references to those specific sources and documents of which the petitioner is aware and on which the petitioner intends to rely to establish those facts or expert opinion. Petitioner must provide sufficient information to show that a genuine dispute exists with the applicant on a material issue of law or fact. Contentions shall be limited to matters within the scope of the amendment under consideration. The contention must be one which, if proven, would entitle the petitioner to relief. A petitioner who fails to file such a supplement which satisfies these requirements with respect to at least one contention will not be permitted to participate as a party.

Those permitted to intervene become parties to the proceeding, subject to any limitations in the order granting leave to intervene, and have the opportunity to participate fully in the conduct of the hearing, including the opportunity to present evidence and cross-examine witnesses.

If a hearing is requested, the Commission will make a final determination on the issue of no significant hazards consideration. The final determination will serve to decide when the hearing is held.

If the final determination is that the amendment request involves no significant hazards consideration, the Commission may issue the amendment and make it immediately effective, notwithstanding the request for a hearing. Any hearing held would take place after issuance of the amendment.

If the final determination is that the amendment request involves a significant hazards consideration, any hearing held would take place before the issuance of any amendment.

A request for a hearing or a petition for leave to intervene must be filed with the Secretary of the Commission, U.S. Nuclear Regulatory Commission, Washington, DC 20555, Attention: Docketing and Services Branch, or may be delivered to the Commission's Public Document Room, the Gelman Building, 2120 L Street, NW., Washington DC, by the above date. Where petitions are filed during the last 10 days of the notice period, it is requested that the petitioner promptly so inform the Commission by a toll-free telephone call to Western Union at 1-(800) 248-5100 (in Missouri 1-(800) 342-6700). The Western Union operator should be given Datagram Identification Number N1023 and the following message addressed to **(Project Director)**: petitioner's name and telephone number, date petition was mailed, plant name, and publication date and page number of this **Federal Register** notice. A copy of the petition should also be sent to the Office of the General Counsel, U.S. Nuclear Regulatory Commission, Washington, DC 20555, and to the attorney for the licensee.

Nontimely filings of petitions for leave to intervene, amended petitions, supplemental petitions and/or requests

for a hearing will not be entertained absent a determination by the Commission, the presiding officer or the Atomic Safety and Licensing Board that the petition and/or request should be granted based upon a balancing of factors specified in 10 CFR 2.714(a)(1)(i)-(v) and 2.714(d).

For further details with respect to this action, see the application for amendment which is available for public inspection at the Commission's Public Document Room, the Gelman Building, 2120 L Street, NW., Washington, DC, and at the local public document room for the particular facility involved.

Commonwealth Edison Company, Docket Nos. 50-237 and 50-249, Dresden Nuclear Power Station, Units 2 and 3, Grundy County, Illinois Docket Nos. 50-254 and 50-265, Quad Cities Nuclear Power Station, Units 1 and 2, Rock Island County, Illinois

Date of application for amendment request: September 10, 1993, as supplemented June 16, 1995.

Description of amendment request: As a result of findings by a Diagnostic Evaluation Team inspection performed by the NRC staff at the Dresden Nuclear Power Station in 1987, Commonwealth Edison Company (ComEd, the licensee) made a decision that both the Dresden Nuclear Power Station and sister site Quad Cities Nuclear Power Station, needed attention focused on the existing custom Technical Specifications (TS) used.

The licensee made the decision to initiate a Technical Specification Upgrade Program (TSUP) for both Dresden and Quad Cities. The licensee evaluated the current TS for both Dresden and Quad Cities against the Standard Technical Specifications (STS) contained in NUREG-0123, ''Standard Technical Specifications General Electric Plants BWR/4.'' The licensee's evaluation identified numerous potential improvements such as clarifying requirements, changing TS to make them more understandable and to eliminate interpretation, and deleting requirements that are no longer considered current with industry practice. As a result of the evaluation, ComEd has elected to upgrade both the Dresden and Quad Cities TS to the STS contained in NUREG-0123.

The TSUP for Dresden and Quad Cities is not a complete adaption of the STS. The TSUP focuses on (1) integrating additional information such as equipment operability requirements during shutdown conditions, (2) clarifying requirements such as limiting conditions for operations and action statements utilizing STS terminology, (3) deleting superseded requirements and modifications to the TS based on the licensee's responses to Generic Letters (GL), and (4) relocating specific items to more appropriate TS locations.

The September 10, 1993, and June 16, 1995, applications proposed to upgrade only Section 3/4.8 (Plant Systems) of the Dresden and Quad Cities TS.

Basis for proposed no significant hazards consideration determination: As required by 10 CFR 50.91(a) the licensee has provided its analysis of the issue of no significant hazards consideration, which is presented below:

The proposed changes do not involve a significant increase in the probability or consequences of an accident previously evaluated because:

In general, the proposed amendment represents the conversion of current requirements to a more generic format, or the addition of requirements which are based on the current safety analysis. Implementation of these changes will provide increased reliability of equipment assumed to operate in the current safety analysis, or provide continued assurance that specified parameters remain within their acceptance limits, and as such, will not significantly increase the probability or consequences of a previously evaluated accident. Some of the proposed changes represent minor curtailments of the current requirements which are based on generic guidance or previously approved provisions for other stations. The proposed amendment for Dresden and Quad Cities Station's Technical Specification Section 3/4.8 are based on STS guidelines or later operating BWR plant's NRC accepted changes. Any deviations from STS requirements do not significantly increase the probability or consequences of any previously evaluated accidents for Dresden or Quad Cities Stations. The proposed amendment is consistent with the current safety analyses and has been previously determined to represent sufficient requirements for the assurance and reliability of equipment assumed to operate in the safety analysis, or provide continued assurance that specified parameters remain within their acceptance limits. As such, these changes will not significantly increase the probability or consequences of a previously evaluated accident.

The associated systems that make up the Plant Systems are not assumed in any safety analysis to initiate any accident sequence for Dresden or Quad Cities Stations; therefore, the probability of any accident previously evaluated is not increased by the proposed amendment. In addition, the proposed surveillance requirements for the proposed amendments to these systems are generally more prescriptive than the current requirements specified within the Technical Specifications. The additional surveillance requirements improve the reliability and availability of all affected systems and, therefore, reduce the consequences of any accident previously evaluated, as the probability of the systems outlined within Section 3/4.8 of the proposed Technical Specifications, performing their intended function is increased by the additional surveillances.

Create the possibility of a new or different kind of accident from any previously evaluated because:

In general, the proposed amendment represents the conversion of current requirements to a more generic format, or the addition of requirements which are based on the current safety analysis. Others represent minor curtailments of the current requirements which are based on generic guidance or previously approved provisions for other stations. These changes do not involve revisions to the design of the station. Some of the changes may involve revision in the operation of the station; however, these provide additional restrictions which are in accordance with the current safety analysis, or are to provide for additional testing or surveillances which will not introduce new failure mechanisms beyond those already considered in the current safety analyses.

The proposed amendment for Dresden and Quad Cities Station's Technical Specification Section 3/4.8 is based on STS guidelines or later operating BWR plants' NRC accepted changes. The proposed amendment has been reviewed for acceptability at the Dresden or Quad Cities Nuclear Power Stations considering similarity of system or component design versus the STS or later operating BWRs. Any deviations from STS requirements do not create the possibility of a new or different kind of accident previously evaluated for Dresden or Quad Cities Stations.

No new modes of operation are introduced by the proposed changes. Surveillance requirements are changed to reflect improvements in technique, frequency of performance or operating experience at later plants. Proposed changes to action statements in many places add requirements that are not in the present technical specifications. The proposed changes maintain at least the present level of operability. Therefore, the proposed changes do not create the possibility of a new or different kind of accident from any previously evaluated.

The associated systems that make up the Plant Systems are not assumed in any safety analysis to initiate any accident sequence for Dresden or Quad Cities Stations. In addition, the proposed surveillance requirements for affected systems associated with the Plant Systems are generally more prescriptive than the current requirements specified within the Technical Specifications; therefore, the proposed changes do not create the possibility of a new or different kind of accident from any previously evaluated.

Involve a significant reduction in the margin of safety because:

In general, the proposed amendment represents the conversion of current requirements to a more generic format, or the addition of requirements which are based on the current safety analysis. Others represent minor curtailments of the current requirements which are based on generic guidance or previously approved provisions

for other stations. Some of the later individual items may introduce minor reductions in the margin of safety when compared to the current requirements. However, other individual changes are the adoption of new requirements which will provide significant enhancement of the reliability of the equipment assumed to operate in the safety analysis, or provide enhanced assurance that specified parameters remain with their acceptance limits. These enhancements compensate for the individual minor reductions, such that taken together, the proposed changes will not significantly reduce the margin of safety.

The proposed amendment to Technical Specification Section 3/4.8 implements present requirements, or the intent of present requirements in accordance with the guidelines set forth in the STS. Any deviations from STS requirements do not significantly reduce the margin of safety for Dresden or Quad Cities Stations. The proposed changes are intended to improve readability, usability, and the understanding of technical specification requirements while maintaining acceptable levels of safe operation. The proposed changes have been evaluated and found to be acceptable for use at Dresden or Quad Cities based on system design, safety analysis requirements and operational performance. Since the proposed changes are based on NRC accepted provisions at other operating plants that are applicable at Dresden or Quad Cities and maintain necessary levels of system or component reliability, the proposed changes do not involve a significant reduction in the margin of safety.

The proposed amendment for Dresden and Quad Cities Stations will not reduce the availability of systems associated with the Plant Systems when required to mitigate accident conditions; therefore, the proposed changes do not involve a significant reduction in the margin of safety.

The NRC staff has reviewed the licensee's analysis and, based on this review, it appears that the three standards of 10 CFR 50.92(c) are satisfied. Therefore, the NRC staff proposes to determine that the amendment request involves no significant hazards consideration.

Local Public Document Room location: For Dresden, Morris Area Public Library District, 604 Liberty Street, Morris, Illinois 60450; for Quad Cities, Dixon Public Library, 221 Hennepin Avenue, Dixon, Illinois 61021

Attorney for licensee: Michael I. Miller, Esquire; Sidley and Austin, One First National Plaza, Chicago, Illinois 60603

NRC Project Director: Robert A. Capra

Commonwealth Edison Company, Docket Nos. 50-237 and 50-249, Dresden Nuclear Power Station, Units 2 and 3, Grundy County, Illinois Docket Nos. 50-254 and 50-265, Quad Cities Nuclear Power Station, Units 1 and 2, Rock Island County, Illinois

Date of application for amendment requests: September 17, 1993, as supplemented June 30, 1995

Description of amendment requests: As a result of findings by a Diagnostic Evaluation Team inspection performed by the NRC staff at the Dresden Nuclear Power Station in 1987, Commonwealth Edison Company (ComEd, the licensee) made a decision that both the Dresden Nuclear Power Station and sister site Quad Cities Nuclear Power Station needed attention focused on the existing custom Technical Specifications (TS) used.

The licensee made the decision to initiate a Technical Specification Upgrade Program (TSUP) for both Dresden and Quad Cities. The licensee evaluated the current TS for both Dresden and Quad Cities against the Standard Technical Specifications (STS) contained in NUREG-0123, ''Standard Technical Specifications General Electric Plants BWR/4.'' The licensee's evaluation identified numerous potential improvements such as clarifying requirements, changing TS to make them more understandable and to eliminate interpretation, and deleting requirements that are no longer considered current with industry practice. As a result of the evaluation, ComEd has elected to upgrade both the Dresden and Quad Cities TS to the STS contained in NUREG-0123.

The TSUP for Dresden and Quad Cities is not a complete adaption of the STS. The TSUP focuses on (1) integrating additional information such as equipment operability requirements during shutdown conditions, (2) clarifying requirements such as limiting conditions for operation and action statements utilizing STS terminology, (3) deleting superseded requirements and modifications to the TS based on the licensee's responses to Generic Letters (GL), and (4) relocating specific items to more appropriate TS locations.

The September 17, 1993, and June 30, 1995, applications proposed to upgrade only Section 3/4.6 (Primary System Boundary) of the Dresden and Quad Cities TS.

Basis for proposed no significant hazards consideration determination: As required by 10 CFR 50.91(a) the licensee has provided its analysis of the issue of no significant hazards consideration, which is presented below:

The proposed changes do not involve a significant increase in the probability or consequences of an accident previously evaluated because:

In general, the proposed amendment represents the conversion of current requirements to a more generic format, or the addition of requirements which are based on the current safety analysis. Implementation of these changes will provide increased reliability of equipment assumed to operate in the current safety analysis, or provide continued assurance that specified parameters remain within their acceptance limits, and as such, will not significantly increase the probability or consequences of a previously evaluated accident.

Some of the proposed changes represent minor curtailments of the current requirements which are based on generic guidance or previously approved provisions for other stations. The proposed amendments for Dresden and Quad Cities Station's Technical Specification Section 3/4.6 are based on STS guidelines or later operating BWR plant's NRC accepted changes. Any deviations from STS requirements do not significantly increase the probability or consequences of any previously evaluated accidents for Dresden or Quad Cities Stations. The proposed amendment is consistent with the current safety analyses and has been previously determined to represent sufficient requirements for the assurance and reliability of equipment assumed to operate in the safety analysis, or provide continued assurance that specified parameters remain within their acceptance limits. As such, these changes will not significantly increase the probability or consequences of a previously evaluated accident.

The associated systems that make up the Primary System Boundary are not assumed in any safety analysis to initiate any accident sequence for Dresden or Quad Cities Stations; therefore, the probability of any accident previously evaluated is not increased by the proposed amendment. In addition, the proposed surveillance requirements for the proposed amendments to these systems are generally more prescriptive than the current requirements specified within the Technical Specifications. The additional surveillance requirements improve the reliability and availability of all affected systems and therefore, reduce the consequences of any accident previously evaluated as the probability of the systems outlined within Section 3/4.6 of the proposed Technical Specifications, performing its intended function is increased by the additional surveillances.

Create the possibility of a new or different kind of accident from any previously evaluated because:

In general, the proposed amendment represents the conversion of current requirements to a more generic format, or the addition of requirements which are based on the current safety analysis. Others represent minor curtailments of the current requirements which are based on generic guidance or previously approved provisions

for other stations. These changes do not involve revisions to the design of the station. Some of the changes may involve revision in the operation of the station; however, these provide additional restrictions which are in accordance with the current safety analysis, or are to provide for additional testing or surveillances which will not introduce new failure mechanisms beyond those already considered in the current safety analyses.

The proposed amendment for Dresden and Quad Cities Station's Technical Specification Section 3/4.6 is based on STS guidelines or later operating BWR plants' NRC accepted changes. The proposed amendment has been reviewed for acceptability at the Dresden and Quad Cities Nuclear Power Stations considering similarity of system or component design versus the STS or later operating BWRs. Any deviations from STS requirements do not create the possibility of a new or different kind of accident previously evaluated for Dresden or Quad Cities Stations. No new modes of operation are introduced by the proposed changes. Surveillance requirements are changed to reflect improvements in technique, frequency of performance or operating experience at later plants. Proposed changes to action statements in many places add requirements that are not in the present technical specifications. The proposed changes maintain at least the present level of operability. Therefore, the proposed changes do not create the possibility of a new or different kind of accident from any previously evaluated.

The associated systems that make up the Primary System Boundary are not assumed in any safety analysis to initiate any accident sequence for Dresden or Quad Cities Stations. In addition, the proposed surveillance requirements for affected systems associated with the Primary System Boundary are generally more prescriptive than the current requirements specified within the Technical Specifications; therefore, the proposed changes do not create the possibility of a new or different kind of accident from any previously evaluated.

Involve a significant reduction in the margin of safety because:

In general, the proposed amendment represents the conversion of current requirements to a more generic format, or the addition of requirements which are based on the current safety analysis. Others represent minor curtailments of the current requirements which are based on generic guidance or previously approved provisions for other stations. Some of the later individual items may introduce minor reductions in the margin of safety when compared to the current requirements.

However, other individual changes are the adoption of new requirements which will provide significant enhancement of the reliability of the equipment assumed to operate in the safety analysis, or provide enhanced assurance that specified parameters remain with their acceptance limits. These enhancements compensate for the individual minor reductions, such that taken together, the proposed changes will not significantly reduce the margin of safety.

The proposed amendment to Technical Specification Section 3/4.6 implements present requirements, or the intent of present requirements in accordance with the guidelines set forth in the STS. Any deviations from STS requirements do not significantly reduce the margin of safety for Dresden or Quad Cities Stations. The proposed changes are intended to improve readability, usability, and the understanding of technical specification requirements while maintaining acceptable levels of safe operation. The proposed changes have been evaluated and found to be acceptable for use at Dresden and Quad Cities based on system design, safety analysis requirements and operational performance. Since the proposed changes are based on NRC accepted provisions at other operating plants that are applicable at Dresden and Quad Cities and maintain necessary levels of system or component reliability, the proposed changes do not involve a significant reduction in the margin of safety.

The proposed amendment for Dresden and Quad Cities Stations will not reduce the availability of systems associated with the Primary System Boundary when required to mitigate accident conditions; therefore, the proposed changes do not involve a significant reduction in the margin of safety.

The NRC staff has reviewed the licensee's analysis and, based on this review, it appears that the three standards of 10 CFR 50.92(c) are satisfied. Therefore, the NRC staff proposes to determine that the amendment requests involve no significant hazards consideration.

Local Public Document Room location: for Dresden, Morris Public Library, 604 Liberty Street, Morris, Illinois 60450; for Quad Cities, Dixon Public Library, 221 Hennepin Avenue, Dixon, Illinois 61021

Attorney for licensee: Michael I. Miller, Esquire; Sidley and Austin, One First National Plaza, Chicago, Illinois 60690

NRC Project Director: Robert A. Capra

Entergy Operations, Inc., Docket No. 50-368, Arkansas Nuclear One, Unit No. 2, Pope County, Arkansas

Date of amendment request: March 17, 1995

Description of amendment request: The proposed amendment transfers requirements for a cycle specific core operating limit from the Technical Specifications to the Core Operating Limits Report. Additionally, a reference to a statistical methodology for determining uncertainties is being changed to reference a methodology that was recently approved by the NRC.

Basis for proposed no significant hazards consideration determination: As required by 10 CFR 50.91(a) the licensee has provided its analysis of the issue of no significant hazards consideration, which is presented below:

Criterion 1 - Does Not Involve a Significant Increase in the Probability of an Accident Previously Evaluated.

The removal of the cycle-dependent value for the departure from nucleate boiling ratio (DNBR) reduction from technical specifications and placing it into the Core Operating Limits Report (COLR) has no impact on plant operation or accident analyses. The proposed change is considered to be administrative in nature. Technical specifications will continue to require operation within the core operational limits for each cycle reload calculated by the approved reload design methodologies. The appropriate actions required if limits are violated will remain in the technical specifications. The reload report presents the results of a cycle-specific evaluation of accidents and transients addressed in the ANO-2 Safety Analysis Report (SAR). The cycle-specific evaluation demonstrates that changes in the fuel cycle design and the corresponding COLR do not involve a significant increase in the probability or consequences of an accident previously evaluated.

The Modified Statistical Combination of Uncertainties (MSCU) methodology statistically combines uncertainties to at least a 95/95 probability/confidence level. The Proposed change to reference the MSCU is administrative in nature. The currently referenced methodology is being replaced with a more recently approved methodology which has been determined to be applicable to ANO-2. The new methodology has been independently reviewed and approved by the NRC. This change does not impact either the manner in which the operating margin to limits on linear heat rate and DNBR is maintained or the manner in which the CPCs respond to transients and provide trips. Therefore, this change does not adversely impact transient analysis assumptions or results. In addition, the physical design or operation of the plant is not impacted by this change. The safety analyses will continue to be performed utilizing NRC-approved methodologies and specific reload changes will be evaluated per 10CFR50.59.

Therefore, these changes do not involve a significant increase in the probability or consequences of any accident previously evaluated.

Criterion 2 - Does Not Create the Possibility of a New or Different Kind of Accident from any Previously Evaluated.

The proposed change to relocate the cycle-specific value for the DNBR reduction from technical specifications to the COLR is administrative in nature. No change to the design, configuration, or method of operation of the plant is made by this change. This parameter will be determined using NRC-approved methods. Technical specifications will continue to require operation within the required core operating limits and appropriate actions will be taken if the limits are exceeded. The relocation of a cycle-specific parameter does not create the possibility of a new or different of accident from any accident previously evaluated.

The proposed change to reference the NRC-approved MSCU methodology is administrative in nature. The currently

referenced methodology is being replaced with a more recently approved methodology which has been determined to be applicable to ANO-2. No physical alterations of plant configuration, changes to plant operating procedures, or operating parameters are proposed. The safety analyses are still performing utilizing NRC-approved methodologies and specific reload changes will be evaluated per 10CFR50.59. No new equipment is being introduced, and no equipment is being operated in a manner inconsistent with its design.

Therefore, these changes do not create the possibility of a new or different kind of accident from any previously evaluated.

Criterion 3 - Does Not Involve a Significant Reduction in the Margin of Safety.

Existing technical specification operability and surveillance requirements are not reduced by the proposed change to relocate the cycle-specific value for DNBR reduction to the COLR. The development of limits for a particular cycle will continue to conform to methods described in NRC-approved documentation. Technical specifications will still require that the core be operated within these limits and specify appropriate actions to be taken if the limits are violated. The cycle-specific COLR limits for future reloads will be developed based on NRC-approved methodologies. Each reload undergoes a 10CFR50.59 safety review to assure that operating of the unit within the cycle-specific limits will not involve a significant reduction in a margin of safety.

The proposed change to reference the MSCU methodology is administrative in nature. The currently referenced methodology is being replaced with a more recently approved methodology which has been determined to be applicable to ANO-2. The resultant overall uncertainty factors using the MSCU methodology are determined and applied to at least the same 95/95 probability/confidence level as the overall uncertainty factors using the current methodology. NRC review and approval of the methodologies used to perform the cycle-specific reload analyses is not affected by this change. The safety analyses are still performed utilizing NRC-approved methodologies and specific reload changes will be evaluated per 10CFR50.59.

Therefore, these changes do not involve a significant reduction in the margin of safety.

The NRC staff has reviewed the licensee's analysis and, based on this review, it appears that the three standards of 10 CFR 50.92(c) are satisfied. Therefore, the NRC staff proposes to determine that the amendment request involves no significant hazards consideration.

Local Public Document Room location: Tomlinson Library, Arkansas Tech University, Russellville, AR 72801

Attorney for licensee: Nicholas S. Reynolds, Esquire, Winston and Strawn, 1400 L Street, N.W., Washington, DC 20005-3502

NRC Project Director: William D. Beckner

Entergy Operations, Inc., Docket No. 50-368, Arkansas Nuclear One, Unit No. 2, Pope County, Arkansas

Date of amendment request: March 17, 1995

Description of amendment request: The proposed amendment deletes requirements associated with surveillances to verify position stops for High Pressure Safety Injection Emergency Core Cooling System throttle valves.

Basis for proposed no significant hazards consideration determination: As required by 10 CFR 50.91(a) the licensee has provided its analysis of the issue of no significant hazards consideration, which is presented below:

Criterion 1 - Does Not Involve a Significant Increase in the Probability or Consequences of an Accident Previously Evaluated.

The HPSI system is not an initiator of a previously evaluated accident; therefore, the probability of a previously evaluated accident will not be increased by the proposed change. Accidents which require the use of HPSI will not have any increased consequences since the new injection/isolation valve arrangement is at least as reliable as the previous valve arrangement. No part of the proposed change has any adverse effect upon the HPSI system response or function. The new manual valves will perform the throttling function previously performed by the HPSI isolation MOVs without reliance upon any electrical equipment (MOV limit switches). The proposed change does not affect routing of HPSI piping or affect total flow characteristics of the system. The proposed change to remove the requirement to verify the correct settings of position stops for the HPSI throttle valves is consistent with NUREG-1432, restructured ''Standard Technical Specifications - Combustion Engineering Plants,'' since the manual throttle valves fixed into position serve the function of, and are equivalent to, flow limiting orifices.

Therefore, this change does not involve a significant increase in the probability or consequences of any accident previously evaluated.

Criterion 2 - Does Not Create the Possibility of a New or Different Kind of Accident from any Previously Evaluated.

The proposed change does not change the function or mode of operation of the HPSI system. The failure of the new MOVs to function will have no different effect than failure of the previously installed MOVs and such failure is enveloped by assumptions in the existing safety analysis, i.e., redundant trains will still be able to function. The new manual valves are less likely to fail in operation since they are fixed into position by tack-welded locking devices and therefore perform their function passively. Inadvertent manipulation of the manual valves will be prevented by the locking arrangement. There are no new functions or modes being accomplished by the MOVs. The throttling function to be performed by the manual valves will be more reliably performed by passive components than by active electrical circuits. The change eliminates uncertainty in throttle valve position as a result of limit switch tolerances and repeatability which form the basis for the current surveillance requirement for periodic verification.

Therefore, this change does not create the possibility of a new or different kind of accident from any previously evaluated.

Criterion 3 - Does Not Involve a Significant Reduction in the Margin of Safety.No margin of safety will be reduced or affected by the proposed deletion of the surveillance requirement. The new manual valves will be throttled to produce a system flow balance equivalent to the current one, and the balance will continue to be confirmed by surveillance testing in accordance with TS requirements.

Therefore, this change does not involve a significant reduction in the margin of safety.

The NRC staff has reviewed the licensee's analysis and, based on this review, it appears that the three standards of 10 CFR 50.92(c) are satisfied. Therefore, the NRC staff proposes to determine that the amendment request involves no significant hazards consideration.

Local Public Document Room location: Tomlinson Library, Arkansas Tech University, Russellville, AR 72801

Attorney for licensee: Nicholas S. Reynolds, Esquire, Winston and Strawn, 1400 L Street, N.W., Washington, D.C. 20005-3502

NRC Project Director: William D. Beckner

Entergy Operations, Inc., Docket No. 50-368, Arkansas Nuclear One, Unit No. 2, Pope County, Arkansas

Date of amendment request: March 17, 1995

Description of amendment request: The proposed amendment revises requirements associated with the frequency of containment post-entry visual inspections.

Basis for proposed no significant hazards consideration determination: As required by 10 CFR 50.91(a) the licensee has provided its analysis of the issue of no significant hazards consideration, which is presented below:

Criterion 1 - Does Not Involve a Significant Increase in the Probability or Consequences of an Accident Previously Evaluated.

The proposed change to the Arkansas Nuclear One-Unit 2 (ANO-2) technical specifications (TS) does not involve any system or component or condition evaluated as an accident initiator; therefore there is no increase in the probability of an accident previously evaluated.

The purpose of this change is to reduce the required number of containment inspections following entries at operational modes above cold shutdown. This reduction in the number of inspections will reduce personnel

exposure to radiation and potential heat stress. These inspections are to verify that no debris that might be transported to the containment sump is left behind at the conclusion of the entry. Typically, containment entries above cold shutdown are for specific purposes and involve a limited area of containment. The expectation for job performance at ANO-2 is that a job site is left cleaner than found. The inspection serves as a verification that any materials taken into the containment building which might foul the sump screens have been removed or have been properly anchored. Performing this inspection on a daily frequency will not result in changing the work practices at ANO-2, therefore the amount of debris generated or left in containment should not increase. The daily inspection will be sufficient verification that conditions in containment are not degrading; therefore, there will be no significant increase in the consequences of an accident previously evaluated.

Therefore, this change does not involve a significant increase in the probability or consequences of any accident previously evaluated.

Criterion 2 - Does Not Create the Possibility of a New or Different Kind of Accident from any Previously Evaluated.

Because the proposed amendment will not change the design, configuration, or method of operation of the plant, this change does not create the possibility of a new or different kind of accident from any previously evaluated.

Criterion 3 - Does Not Involve a Significant Reduction in the Margin of Safety.

There will be no adverse effects on margins of safety since materials that are considered acceptable to remain in containment has not changed. By reducing the number of inspections, no mechanism has been created that will generate more debris in containment nor have work practices been altered to allow less stringent controls over what is taken in or left in containment. Therefore, this change does not involve a significant reduction in the margin of safety.

The NRC staff has reviewed the licensee's analysis and, based on this review, it appears that the three standards of 10 CFR 50.92(c) are satisfied. Therefore, the NRC staff proposes to determine that the amendment request involves no significant hazards consideration.

Local Public Document Room location: Tomlinson Library, Arkansas Tech University, Russellville, AR 72801

Attorney for licensee: Nicholas S. Reynolds, Esquire, Winston and Strawn, 1400 L Street, N.W., Washington, DC 20005-3502

NRC Project Director: William D. Beckner

Entergy Operations, Inc., Docket No. 50-368, Arkansas Nuclear One, Unit No. 2, Pope County, Arkansas

Date of amendment request: April 4, 1995

Description of amendment request: The proposed amendment deletes requirements associated with part length control element assemblies. During the upcoming refueling outage all part length control assemblies will be removed from the reactor.

Basis for proposed no significant hazards consideration determination: As required by 10 CFR 50.91(a) the licensee has provided its analysis of the issue of no significant hazards consideration, which is presented below:

Criterion 1 - Does Not Involve a Significant Increase in the Probability or Consequences of an Accident Previously Evaluated.

The proposed changes maintain conservative restrictions on the operation of those control element assemblies (CEAs) formerly specified as part length CEAs (PLCEAs) and are considered to be administrative in nature. The Arkansas Nuclear One - Unit 2 (ANO-2) Safety Analysis Report (SAR) Chapter 15 accident analyses identify four families of analyses associated with the CEAs. Each of these analyses is evaluated in the development of the Reload Report for each fuel cycle, and the appropriate limitations to insure acceptable analysis results are incorporated in the Core Operating Limits Report (COLR) for the fuel cycle. The modification replacing the PLCEAs with full length CEAs will be evaluated under the Arkansas Nuclear One (ANO) 10CFR50.59 process prior to implementation. The Reload Report and changes to the COLR are also evaluated under the ANO 10CFR50.59 process prior to incorporating the identified changes. Movement of the PLCEAs during power operation has typically resulted in more dropped CEAs than movement of the full length CEAs due to the greater weight of the PLCEAs. Replacement of the PLCEAs with full length CEAs should result in a reduction in the probability of a dropped CEA.

Therefore, this change does not involve a significant increase in the probability or consequences of any accident previously evaluated.

Criterion 2 - Does Not Create the Possibility of a New or Different Kind of Accident from any Previously Evaluated.

The proposed changes introduce no new mode of plant operation and are considered to be administrative in nature. Operating experience has shown that the full length CEAs are capable of controlling the axial power distribution function intended for the PLCEAs. The PLCEAs will be replaced with the same type of full length CEAs used in shutdown and regulating CEA groups.

Therefore, this change does not create the possibility of a new or different kind of accident from any previously evaluated.

Criterion 3 - Does Not Involve a Significant Reduction in the Margin Safety.

The proposed changes may improve overall safety margins. Replacement of the PLCEAs with full length CEAs and including these Group P CEAs in the CEA drop time testing will allow ANO-2 to credit these CEAs in the shutdown margin calculations. This should result in an increase in the available shutdown margin during reactor operation.

Therefore, this change does not involve a significant reduction in the margin of safety.

The NRC staff has reviewed the licensee's analysis and, based on this review, it appears that the three standards of 10 CFR 50.92(c) are satisfied. Therefore, the NRC staff proposes to determine that the amendment request involves no significant hazards consideration.

Local Public Document Room location: Tomlinson Library, Arkansas Tech University, Russellville, AR 72801

Attorney for licensee: Nicholas S. Reynolds, Esquire, Winston and Strawn, 1400 L Street, N.W., Washington, DC 20005-3502

NRC Project Director: William D. Beckner

Entergy Operations, Inc., Docket No. 50-368, Arkansas Nuclear One, Unit No. 2, Pope County, Arkansas

Date of amendment request: April 4, 1995

Description of amendment request: The proposed amendment revises the containment cooling response time to reduce the likelihood of a water hammer event in service water piping.

Basis for proposed no significant hazards consideration determination: As required by 10 CFR 50.91(a) the licensee has provided its analysis of the issue of no significant hazards consideration, which is presented below:

Criterion 1 - Does Not Involve a Significant Increase in the Probability or consequences of an Accident Previously Evaluated.

The containment cooling system and the service water system are not considered to be accident initiators for any analyzed accident. The containment cooling system functions to mitigate the effects of a Main Steam Line Break (MSLB) or Loss of Coolant Accident (LOCA) on the containment environment. The proposed change does not affect the limiting MSLB analysis as the proposed increase in containment cooling response time is only instituted on a loss of off-site power. The limiting LOCA analysis has been evaluated with respect to the proposed containment cooling response time. Although the analysis shows an increase in the containment peak pressure (approximately 0.1 psig), this increase in the peak containment pressure is not considered significant since the MSLB accident with off-site power available is still the overall limiting accident condition with respect to containment peak pressure. The containment peak conditions for the LOCA and MSLB analyses remain below the original Final Safety Analysis Report (FSAR) conditions of 53.4 psig and 288°F.

Therefore, this change does not involve a significant increase int he probability or consequences of any accident previously evaluated.

Criterion 2 - Does Not Create the Possibility of a New or Different Kind of Accident from any Previously Evaluated.

The proposed change in containment cooling response time introduces no new mode of plant operation. Containment cooling response time is an analytical input and is not considered to be the initiator of any accident condition.

Therefore, this change does not create the possibility of a new or different kind of accident from any previously evaluated.

Criterion 3 - Does Not Involve a Significant Reduction in the Margin of Safety.

The increase in containment cooling response time has been evaluated with respect to the accident analyses resulting in peak containment pressures. This evaluation has shown no significant increase in the resulting peak containment pressure since the overall limiting accident with respect to containment pressure is still the MSLB with off-site power available. The containment peak conditions for the LOCA and MSLB analyses remain below the original FSAR conditions of 53.4 psig and 288°F.

Therefore, this change does not involve a significant reduction in the margin of safety.

Therefore, based upon the reasoning presented above and the previous discussion of the amendment request, Entergy Operations has determined that the requested change does not involve a significant hazards consideration.

The NRC staff has reviewed the licensee's analysis and, based on this review, it appears that the three standards of 10 CFR 50.92(c) are satisfied. Therefore, the NRC staff proposes to determine that the amendment request involves no significant hazards consideration.

Local Public Document Room location: Tomlinson Library, Arkansas Tech University, Russellville, AR 72801

Attorney for licensee: Nicholas S. Reynolds, Esquire, Winston and Strawn, 1400 L Street, N.W., Washington, DC 20005-3502

NRC Project Director: William D. Beckner

Gulf States Utilities Company, Cajun Electric Power Cooperative, and Entergy Operations, Inc., Docket No. 50-458, River Bend Station, Unit 1, West Feliciana Parish, Louisiana

Date of amendment request: May 25, 1995

Description of amendment request: The proposed amendment revises the Physical Security Plan vital island requirements.

Basis for proposed no significant hazards consideration determination: As required by 10 CFR 50.91(a) the licensee has provided its analysis of the issue of no significant hazards consideration, which is presented below:

The accident mitigation features of the plant are not affected by the proposed change. This change provides an equivalent level of protection to the plant and is adequate for preventing an unacceptable risk to public health and safety. This is due to continued compliance with existing regulatory requirements, the integral defense in depth design of the security program, including programs in place to minimize the threat of insiders, and historically high system reliability. The SBO (Station Blackout diesel) is designed with sufficient capacity to accommodate station blackout needs as well as those required for security. Ample protection against a design basis security threat continues to be provided. Therefore, this change does not increase the probability or consequences of an accident previously evaluated.

The Station Blackout diesel generator has been approved and accepted by the Staff pursuant 10CFR50.63. New systems, modes of equipment operation, failure modes, or other plant perturbations are not introduced by this change. The change provides an equivalent level of protection, does not decrease the effectiveness of the overall security program and is adequate for preventing an unacceptable risk to public health and safety. Ample protection against a design basis security threat continues to be provided with overall physical protection of the plant maintained. Therefore, this change does not create the possibility of a new or different kind of accident from any previously evaluated.

This change does not change a safety limit, an LCO (Limiting Condition of Operation), or a surveillance requirement on equipment required to operate the plant. It is equivalent in level of protection, does not decrease the effectiveness of the security program and is adequate for preventing an unacceptable risk to public health and safety. The SBO diesel generator will provide an adequate alternative source of power to security systems. Ample protection against a design basis security threat continues to be provided. Therefore, this change does not involve a reduction in the margin of safety.

The NRC staff has reviewed the licensee's analysis and, based on this review, it appears that the three standards of 10 CFR 50.92(c) are satisfied. Therefore, the NRC staff proposes to determine that the amendment request involves no significant hazards consideration.

Local Public Document Room location: Government Documents Department, Louisiana State University, Baton Rouge, Louisiana 70803

Attorney for licensee: Mark Wetterhahn, Esq., Winston & Strawn, 1400 L Street, N.W., Washington, D.C. 20005

NRC Project Director: William D. Beckner

Houston Lighting & Power Company, City Public Service Board of San Antonio, Central Power and Light Company, City of Austin, Texas, Docket Nos. 50-498 and 50-499, South Texas Project, Units 1 and 2, Matagorda County, Texas

Date of amendment request: May 22, 1995

Description of amendment request: The proposed amendment would revise Technical Specification (TS) 4.8.1.1.2.e.7 to allow the performance of the 24-hour surveillance test of the diesel generators during power operation.

Basis for proposed no significant hazards consideration determination: As required by 10 CFR 50.91(a) the licensee has provided its analysis of the issue of no significant hazards consideration, which is presented below:

1. The proposed change does not involve a significant increase in the probability or consequences of an accident previously evaluated?

The proposed change to permit the 24 hour surveillance test of the diesels to be performed during power operation does not increase the chances for a previously analyzed accident to occur. The function of the diesels is to supply emergency power in the event of a loss of offsite power. Operation of the diesels is not a precursor to any accident. Furthermore, the diesel generator being tested will remain operable and will be available to supply emergency loads within the required time. In addition, the two remaining diesel generators will be operable during the test. Consequently, if an offsite disturbance were to occur that affected the operability of the diesel being tested, the two remaining diesels would be capable of feeding the loads necessary for safe shutdown of the plant. This addresses the concerns raised in Information Notice 84-69 regarding the operation of emergency diesel generators connected in parallel with offsite power. In summary, the proposed changes do not adversely affect the performance or the ability of the diesel generators to perform their intended function.

Therefore, the proposed change will not involve a significant increase in the probability or consequences of an accident previously evaluated.

2. The proposed change does not create the possibility of a new or different kind of accident from any accident previously evaluated.

The proposed amendment to the 24 hour surveillance test will not affect the operation of any safety system or alter its response to any previously analyzed accident. The diesel will automatically transfer from the test mode if necessary to supply emergency loads in the required time. The test mode is used for the monthly surveillance of the diesel generators as well, therefore, no new plant operating modes are introduced. In the event the diesel fails the surveillance test, it will be declared inoperable and the actions

required for an inoperable diesel will be performed. The remaining two diesel generators will be operable and are capable of feeding the loads necessary for safe shutdown of the plant.

Therefore, the proposed change will not create the possibility of a new or different kind of accident from any previously evaluated.

3. The proposed change does not involve a significant reduction in the margin of safety.

The proposed amendment will not reduce availability of the diesel generator being tested to provide emergency power in the event of a loss of offsite power. If a loss of offsite power occurs during the surveillance test, the diesel generator output breaker will be tripped by the directional over-current relay on the ESF transformer. The diesel generator will transfer to the emergency mode, and the ESF undervoltage logic will initiate Mode II (Loss of Offsite Power) operation of the ESF load sequencer to supply emergency loads from the diesel generator. If a Loss of Coolant Accident occurs during the surveillance test, the diesel generator output breaker will be opened by a signal from the Solid State Protection System and the preferred offsite source will continue to provide power to the ESF bus. The diesel generator will continue to run in the emergency mode and would be available to automatically supply safety-related loads during any loss of offsite power condition. The test mode to emergency mode transfer is tested once per cycle in accordance with Surveillance Requirement 4.8.1.1.2.e.10. In addition, the two remaining generators will be operable during the test. Consequently, if an offsite disturbance were to occur that affected the operability of the diesel being tested, the two remaining diesels would be capable of feeding the loads necessary for safe shutdown of the plant. The time required for the diesel being tested to pick up emergency loads will not be affected by performing the 24 hour surveillance test during power operation.

Therefore, the proposed change will not involve a significant reduction in a margin of safety.

The NRC staff has reviewed the licensee's analysis and, based on this review, it appears that the standards of 10 CFR 50.92(c) are satisfied. Therefore, the NRC staff proposes to determine that the request for amendments involves no significant hazards consideration.

Local Public Document Room location: Wharton County Junior College, J. M. Hodges, Learning Center, 911 Boling Highway, Wharton, Texas 77488

Attorney for licensee: Jack R. Newman, Esq., Newman & Holtzinger, P.C., 1615 L Street, N.W., Washington, D.C. 20036

NRC Project Director: William D. Beckner

Houston Lighting & Power Company, City Public Service Board of San Antonio, Central Power and Light Company, City of Austin, Texas, Docket Nos. 50-498 and 50-499, South Texas Project, Units 1 and 2, Matagorda County, Texas

Date of amendment request: May 25, 1995

Description of amendment request: The proposed amendment would revise the technical specifications (TSs) on containment leakage, to make the action statement consistent with the need to perform Type C testing at power, and to replace the surveillance requirements with a single requirement to apply the requirements of Appendix J as modified by approved exemptions. The proposed amendment would also revise the TSs on containment integrity, containment leakage, and containment air locks, to eliminate the numerical value of calculated peak containment internal pressure related to the design basis accident. In addition, there is an associated proposed exemption, from the requirements of 10 CFR Part 50, Appendix J, to allow the performance of the required periodic Type C tests during power operation.

Basis for proposed no significant hazards consideration determination: As required by 10 CFR 50.91(a) the licensee has provided its analysis of the issue of no significant hazards consideration, which is presented below:

1. Does the change involve a significant increase in the probability or consequences of an accident previously evaluated?

The change to the action statement of Technical Specification 3.6.1.2 does not significantly increase the probability of an accident because leakage rate testing is not an accident initiator. The consequences of an accident previously evaluated are not increased by changing the ACTION statement of Technical Specification 3.6.1.2 because the requirements for CONTAINMENT INTEGRITY are not reduced. The consequences of an accident previously evaluated are not increased by the change in the surveillance wording because no technical changes are proposed. The underlying purpose of the proposed change to the Technical Specifications and requested exemption to Appendix J, to allow surveillance credit for at-power Type C testing, will not increase the consequences of an accident because there are no reductions in the requirements to maintain containment integrity.

The proposed change to delete the numeric value of Pa is purely administrative, and has no potential effect on accident initiation or consequences.

2. Does the change create the possibility of a new or different kind of accident from any previously evaluated?

Nothing associated with the requested changes will physically change the configuration of the plant or impose new operating configurations not previously considered. Leakage rate testing will remove components and trains from service; however, this is not operationally different from other testing and maintenance evolutions that remove components or trains from service, and which were previously considered. Consequently, the possibility of a new or different kind of accident from any previously evaluated is not created.

3. Does this change involve a significant reduction in the margin of safety?

The margin of safety is not significantly reduced by changing the ACTION statement of Technical Specification 3.6.1.2 because the requirements for CONTAINMENT INTEGRITY are not reduced. The margin of safety is not reduced by the change in the surveillance wording because no technical changes are proposed. The underlying purpose of the proposed change to the Technical Specifications and requested exemption to Appendix J, to allow surveillance credit for at-power Type C testing, will not reduce the margin of safety because there are no reductions in the requirements to maintain containment integrity.

The proposed change to delete the numeric value of P_a is purely administrative, and has no potential effect on the margin of safety because the value itself is unchanged.

The NRC staff has reviewed the licensee's analysis and, based on this review, it appears that the standards of 10 CFR 50.92(c) are satisfied. Therefore, the NRC staff proposes to determine that the request for amendments involves no significant hazards consideration.

Local Public Document Room location: Wharton County Junior College, J. M. Hodges, Learning Center, 911 Boling Highway, Wharton, Texas 77488

Attorney for licensee: Jack R. Newman, Esq., Newman & Holtzinger, P.C., 1615 L Street, N.W., Washington, D.C. 20036

NRC Project Director: William D. Beckner

Houston Lighting & Power Company, City Public Service Board of San Antonio, Central Power and Light Company, City of Austin, Texas, Docket Nos. 50-498 and 50-499, South Texas Project, Units 1 and 2, Matagorda County, Texas

Date of amendment request: May 30, 1995

Description of amendment request: The proposed amendment would increase the spent fuel pool heat load licensing basis to provide greater flexibility for normal refueling practices.

Basis for proposed no significant hazards consideration determination: As required by 10 CFR 50.91(a) the licensee has provided its analysis of the issue of no significant hazards consideration, which is presented below:

1. The proposed changes do not involve a significant increase in the probability or consequences of an accident previously evaluated because:

(a) The Spent Fuel Pool conditions are not indicative of accident initiators.

(b) Design and operability requirements of equipment important to safety are not affected.

(c) If only one Spent Fuel Pool cooling train is available, boiling would not occur and the Spent Fuel Pool components would remain within their design basis.

(d) The complete loss of Spent Fuel Pool cooling event has previously been analyzed and described in Supplement 6 to the Safety Evaluation Report, Appendix BB. The dose consequences for this event have been evaluated and the safety evaluation is described in Updated Safety Analysis Report Section 9.1.3.3.4. The results of the evaluation show that the Spent Fuel Pool components would remain within their design bases. Also, the dose consequences of iodine release as a result of Spent Fuel Pool boiling are significantly below the allowable dose limits of 10 CFR 100.

2. The proposed changes do not create the possibility of a new or different kind of accident from any accident previously because:

(a) The operability of safety-related equipment is not impacted.

(b) The probability of safety-related equipment malfunctioning is not increased.

(c) The scope of the change does not establish a potential new accident precursor.

(d) The Spent Fuel Pool design considers design basis heat loads for the modified refueling procedure which includes a full-core offload.

(e) For the design basis case, the integrity of the Spent Fuel Pool Boraflex is not adversely impacted.

3. The proposed changes do not involve a significant reduction in the margin of safety because:

(a) No fuel damage would occur as a result of the proposed change.

(b) Technical Specification operability and surveillance requirements are not reduced.

(c) The Spent Fuel Pool boiling doses would be significantly below the allowable dose limits of 10 CFR 100.

(d) The modified refueling procedure (full-core offload) continues to have acceptable margins of safety.

(e) For the design basis case, the integrity of the Spent Fuel Pool Boraflex is not adversely impacted.

The NRC staff has reviewed the licensee's analysis and, based on this review, it appears that the standards of 10 CFR 50.92(c) are satisfied. Therefore, the NRC staff proposes to determine that the request for amendments involves no significant hazards consideration.

Local Public Document Room location: Wharton County Junior College, J. M. Hodges, Learning Center, 911 Boling Highway, Wharton, Texas 77488

Attorney for licensee: Jack R. Newman, Esq., Newman & Holtzinger, P.C., 1615 L Street, N.W., Washington, D.C. 20036

NRC Project Director: William D. Beckner

Illinois Power Company and Soyland Power Cooperative, Inc., Docket No. 50-461, Clinton Power Station, Unit No. 1, DeWitt County, Illinois

Date of amendment request: June 9, 1995

Description of amendment request: The proposed amendment would modify Technical Specification (TS) 4.1, ''Site Location,'' to incorporate a description of the exclusion area boundary. The proposed change is necessary to ensure the content of the TS conforms to Section 182 of the Atomic Energy Act of 1954.

Basis for proposed no significant hazards consideration determination: As required by 10 CFR 50.91(a) the licensee has provided its analysis of the issue of no significant hazards consideration which is presented below:

(1) The proposed change does not involve a change to the plant design or operation. As a result, the proposed change does not affect any of the parameters or conditions that could contribute to the initiation of any accidents previously evaluated. In addition, the physical location of the [exclusion area boundary] EAB has not been changed; a description of its location has merely been added to the TS. Thus, the proposed change cannot increase the probability or the consequences of any accident previously evaluated.

(2) The proposed change does not involve a change to the plant design or operation. As a result, the proposed change does not affect any parameter or condition that could contribute to the initiation of any accidents. Thus, the proposed change cannot create the possibility of a new or different kind of accident from any accident previously evaluated.

(3) The proposed change only affects regulatory controls on the accepted configuration of the EAB. The proposed change does not involve an actual change to the location of the EAB. The proposed change will restore compliance with the Atomic Energy Act of 1954 and require prior NRC approval of any changes to the physical location of the EAB. As a result, IP has concluded that the proposed change will not result in a reduction in the margin of safety.

The NRC staff has reviewed the licensee's analysis and, based on this review, it appears that the three standards of 10 CFR 50.92(c) are satisfied. Therefore, the NRC staff proposes to determine that the amendment request involves no significant hazards consideration.

Local Public Document Room location: Vespasian Warner Public Library, 120 West Johnson Street, Clinton, Illinois 61727

Attorney for licensee: Leah Manning Stetzner, Vice President, General Counsel, and Corporate Secretary, 500 South 27th St., Decatur, Illinois 62525

NRC Project Director: Gail H. Marcus

Indiana Michigan Power Company, Docket No. 50-315, Donald C. Cook Nuclear Plant, Unit No. 1, Berrien County, Michigan

Date of amendment request: February 3, 1995, as supplemented April 25, 1995 (AEP:NRC:1166Q and 1166R)

Description of amendment request: The proposed amendment would allow continued use of a steam generator (SG) tube support plate interim plugging criteria for fuel cycle 15. The change would allow SG tubes with bobbin coil eddy current indications less than or equal to 2.0 volts at tube support plate intersections to remain in service if the projected end-of-cycle distribution of crack indications is shown to result in primary-to-secondary leakage less than 12.6 gpm during a postulated steam line break (SLB). The change would also allow indications greater than 2.0 volts but less than or equal to 5.6 volts to remain in service if a motorized rotating pancake coil probe inspection does not detect degradation.

Basis for proposed no significant hazards consideration determination: As required by 10 CFR 50.91(a) the licensee has provided its analysis of the issue of no significant hazards consideration, which is presented below:

In accordance with the three factor test of 10 CFR 50.92(c), implementation of the proposed license amendment is analyzed using the following standards and found not to 1) involve a significant increase in the probability or consequences of an accident previously evaluated; 2) create the possibility of a new or different kind of accident from any accident previously evaluated; or 3) involve a significant reduction in margin of safety. Conformance of the proposed amendment to the standards for a determination of no significant hazards as defined in 10 CFR 50.92 (three factor test) is shown in the following paragraphs.

1) Operation of Cook Nuclear Plant Unit 1 in accordance with the proposed license amendment does not involve a significant increase in the probability or consequences of an accident previously evaluated. Testing of model boiler specimens for free span tubing (no tube support plate restraint) at room temperature conditions show burst pressures in excess of 5000 psi for indications of outer diameter stress corrosion cracking with voltage measurements as high as 19 volts. Burst testing performed on pulled tubes from Cook Nuclear Plant Unit 1 with up to a 2.02 volt indication shows measured burst pressure in excess of 10,000 psi at room temperature. Burst testing performed on pulled tubes from other plants with up to 7.5 volt indications show burst pressures in excess of 6,300 psi at room temperatures. Correcting for the effects of temperature on

material properties and minimum strength levels (as the burst testing was done at room temperature), tube burst capability significantly exceeds the safety factor requirements of RG [Regulatory Guide] 1.121 [''Bases for Plugging Degraded PWR Steam Generator Tubes'']. As stated earlier, tube burst criteria are inherently satisfied during normal operating conditions due to the proximity of the tube support plate [TSP]. Test data indicates that tube burst cannot occur within the tube support plate, even for tubes which have 100% throughwall electric-discharge machined notches 0.75 inch long, provided the tube support plate is adjacent to the notched area. Since tube-to-tube support plate proximity precludes tube burst during normal operating conditions, use of the criteria must, therefore, retain tube integrity characteristics which maintain the RG 1.121 margin of safety of 1.43 times the bounding faulted condition (steam line break) pressure differential.

During a postulated main steam line break, the TSP has the potential to deflect during blowdown, thereby uncovering the intersection. Based on the existing data base, the RG 1.121 criterion requiring maintenance of a safety factor of 1.43 times the steam line break pressure differential on tube burst is satisfied by 7/8 inch diameter tubing with bobbin coil indications with signal amplitudes less than 9.6 volts, regardless of the indicated depth measurement. A 2.0 volt plugging criteria compares favorably with the 9.6 volt structural limit considering the previously calculated growth rates for ODSCC [outer diameter stress corrosion cracking] within Cook Nuclear Plant Unit 1 SGs. Considering a voltage growth component of 0.8 volts (40% voltage growth based on 2.0 volts BOC [beginning of cycle]), and a nondestructive examination uncertainty of 0.40 volts (20% voltage uncertainty based on 2.0 volts BOC), when added to the BOC IPC [interim plugging criteria] of 2.0 volts, results in a bounding EOC [end of cycle] voltage of approximately 3.2 volts for cycle 15 operation. A 6.4 volt safety margin exists (9.6 structural limit - 3.2 volt EOC - 6.4 volt margin).

For the voltage/burst correlation, the EOC structural limit is supported by a voltage of 9.6 volts. Using this structural limit of 9.6 volts, a BOC maximum allowable repair limit can be established using the guidance of RG 1.121. The BOC maximum allowable repair limit should not permit a significant number of EOC indications to exceed the 9.6 volt structural limit and should assure that acceptable tube burst probabilities are attained. By adding NDE [nondestructive examination] uncertainty allowances and an allowance for crack growth to the repair limit, the structural limit can be validated. The previous IPC submittal established the conservative NDE uncertainty limit of 20% of the BOC repair limit. For consistency, a 40% voltage growth is extremely conservative for Cook Nuclear Plant Unit 1. Therefore, the maximum allowable BOC repair limit (RL) based on the structural limit of 9.6 volts can be represented by the expression:

RL + (0.2 x RL) + (0.4 x RL) = 9.6 volts,

or,the maximum allowable BOC repair limit can be expressed as,

RL = 9.6 volt structural limit/1.6 = 6.0 volts

This structural repair limit supports this application for cycle 15 IPC implementation to repair bobbin indications greater than 2.0 volts based on RPC [rotating pancake coil] confirmation of the indication. Conservatively, an upper limit of 5.6 volts will be used to repair bobbin indications which are above 2.0 volts but do not have confirming RPC calls.

The conservatism of this repair limit is shown by the EOC 13 (Spring 1994) eddy current data. The overall average voltage growth was determined to be on 1.4% (of the BOC voltage). In addition, the EOC 13 maximum observed voltage increase was 0.40 volts, and occurred in a tube with a BOC indication of 0.96 volts. The applicability of cycle 14 growth rates for cycle 15 operation will be confirmed prior to return to service of Cook Nuclear Plant Unit 1. Similar large structural margins are anticipated.

Relative to the expected leakage during accident condition loadings, it has been previously established that a postulated main steam line break outside of containment but upstream of the main steam isolation valve represent the most limiting radiological condition relative to the IPC. In support of implementation of the IPC, it will be determined whether the distribution of crack indications at the tube support plate intersections at the end of cycle 15 are projected to be such that primary to secondary leakage would result in site boundary doses within a small fraction of the 10 CFR 100 guidelines. A separate calculation has determined this allowable steam line break leakage limit to be 12.6 gpm. Although not required by the Cook Nuclear Plant design basis, this calculation uses the recommended Iodine-131 transient spiking values consistent with NUREG-0800 [Standard Review Plan], and the T/S [technical specification] reactor coolant system activity limit of 1.0 micro curie per gram dose equivalent Iodine-131. The projected steam line break leakage rate calculation methodology prescribed in [Draft] GL 94-XX [''Voltage-Based Repair Criteria for the Repair of Westinghouse Steam Generator Tubes Affected by Outside Diameter Stress Corrosion Cracking,'' August 12, 1994] and WCAP 14277 [''SLB Leak Rate and Tube Burst Probability Analysis Methods for ODSCC at TSP Intersections''] will be used to calculate EOC 15 leakage, based on actual EOC 14 distributions and EOC 15 projected distributions. Due to the relatively low voltage growth rates at Cook Nuclear Plant Unit 1 and the relatively small number of indications affected by the IPC, steam line break leakage prediction per GL 94-XX is expected to be significantly less than the acceptance limit of 12.6 gpm in the faulted loop.

Prior to issue of GL 94-XX, projected EOC 14 leak rates were calculated, based on draft NUREG-1477 [''Voltage-Based Interim Plugging Criteria for DG Tubes, Draft for Comments''], for a total of twelve cases, the combination of six probability-of-leak correlations and two leak rate calculation methodologies. Results of the calculations show that the projected EOC 14 leak rates ranged from 0.001 gpm to 1.360 gpm. These results are well below the 12.6 gpm allowable; therefore, implementation of the 2 volt IPC during cycle 15 would not adversely affect SG tube integrity and results in acceptable dose consequences.

Current GL 94-XX methodology requires only the log-logistic probability of leakage correlation be used. Projected EOC 14 SLB leakage using this function was calculated to be only 0.001 gpm. Based on the relatively few numbers of intersections at Cook Nuclear Plant Unit 1 to which the IPC are applied and extremely small Cook Nuclear Plant Unit 1 plant-specific growth rate, a similar value would be expected based on the EOC 14 eddy current data. The inclusion of all IPC intersections in the leakage model, along with application of a probability of detection of 0.6, will result in extremely conservative leakage estimations, especially so since close examination of the available data shows that indications of less than 2.8 volts will not be expected to leak during SLB conditions. All Unit 1 IPC indications are expected to be below 2.8 volts at the EOC 15 conditions.

The proposed amendment does not result in any increase in the probability or consequences of an accident previously evaluated within the Cook Nuclear Plant Unit 1 FSAR.

2) The proposed license amendment does not create the possibility of a new or different kind of accident previously evaluated.

Implementation of the proposed SG tube IPC does not introduce any significant changes to the plant design basis. Use of the criteria does not provide a mechanism which could result in an accident outside of the region of the tube support plate elevations. Neither a single or multiple tube rupture event would be expected in a SG in which the plugging criteria has been applied (during all plant conditions).

Specifically, we will continue to implement a maximum leakage rate limit of 150 gpd (0.1 gpm) per SG to help preclude the potential for excessive leakage during all plant conditions. The cycle 15 T/S limits imposed on primary to secondary leakage at operating conditions are: a maximum of 0.4 gpm (600 gpd) for all SGs with a maximum of 150 gpd allowed for any one SG.

The RG 1.121 criteria for establishing operational leakage rate limits that require plant shutdown are based upon leak-before-break considerations to detect a free span crack before potential tube rupture during faulted plant conditions. The 150 gpd limit should provide for leakage detection and plant shutdown in the event of the occurrence of an unexpected single crack resulting in leakage that is associated with the longest permissible crack length. Regulatory Guide 1.121 acceptance criteria for establishing operating leakage limits are based on leak-before-break considerations such that plant shutdown is initiated if the leakage associated with the longest permissible crack is exceeded. The longest permissible crack is the length that provides a factor of safety of 1.43 against bursting at faulted conditions maximum pressure differential. A voltage amplitude of 9.6 volts for typical ODSCC corresponds to meeting this tube burst requirement at a lower 95% prediction limit on the burst correlation

coupled with 95/95 lower tolerance limit material properties. Alternate crack morphologies can correspond to 9.6 volts so that a unique crack length is not defined by the burst pressure versus voltage correlation. Consequently, typical burst pressure versus through-wall crack length correlations are used below to define the ''longest permissible crack'' for evaluating operating leakage limits.

Consistent with the Cycle 13 and Cycle 14 license amendment requests for IPC and Section 5 of Enclosure 1 of the GL, operational leakage limits will remain at 150 gpd per SG. Axial cracks leaking at this level are expected to provide leak before break (LBB) protection at both the SLB pressure differential of 2560 psi and, while not part of any established LBB methodology, LBB protection will also be provided at a value of 1.43 times the SLB pressure differential. Thus, the 150 gpd limit provides for plant shutdown prior to reaching critical crack lengths for steam line break conditions. Additionally, this leak-before-break evaluation assumes that the entire crevice area is uncovered during blowdown. Partial uncovery will provide benefit to the burst capacity of the intersection.

3) The proposed license amendment does not involve a significant reduction in margin of safety.

The use of the voltage based bobbin probe interim tube support plate elevation plugging criteria at Cook Nuclear Plant Unit 1 is demonstrated to maintain SG tube integrity commensurate with the criteria of RG 1.121. Regulatory Guide 1.121 describes a method acceptable to the NRC staff for meeting GDC [General Design Criteria] 14, 15, 31, and 32 by reducing the probability or the consequences of SG tube rupture. This is accomplished by determining the limiting conditions of degradation of SG tubing, as established by inservice inspection, for which tubes with unacceptable cracking should be removed from service. Upon implementation of the criteria, even under the worst case conditions, the occurrence of ODSCC at the tube support plate elevations is not expected to lead to a SG tube rupture event during normal or faulted plant conditions. The EOC 15 distribution of crack indications at the tube support plate elevations will be confirmed by analysis and calculation to result in acceptable primary to secondary leakage during all plant conditions and that radiological consequences are not adversely impacted.

In addressing the combined effects of a LOCA [loss-of-coolant accident] and SSE [safe-shutdown earthquake] on the SG component (as required by GDC 2), it has been determined that tube collapse may occur in the SGs at some plants. This is the case as the tube support plates may become deformed as a result of lateral loads at the wedge supports at the periphery of the plate due to the combined effects of the LOCA rarefaction wave and SSE loadings. Then, the resulting pressure differential on the deformed tubes may cause some of the tubes to collapse.

There are two issues associated with SG tube collapse. First, the collapse of SG tubing reduces the RCS [reactor coolant system] flow area through the tubes. The reduction in flow area increases the resistance to flow of steam from the core during a LOCA which, in turn, may potentially increase peak clad temperature. Second, there is a potential that partial through-wall cracks in tubes could progress to through-wall cracks during tube deformation or collapse.

Consequently, since the leak-before-break methodology is applicable to the Cook Nuclear Plant Unit 1 reactor coolant loop piping, the probability of breaks in the primary loop piping is sufficiently low that they need not be considered in the structural design of the plant. The limiting LOCA event becomes either the accumulator line break or the pressurizer surge line break. Loss of coolant accident loads for the primary pipe breaks were used to bound the Cook Nuclear Plant Unit 1 smaller breaks. The results of the analysis using the larger break inputs show that the LOCA loads were found to be of insufficient magnitude to result in SG tube collapse or significant deformation.

Addressing RG 1.83 [''Inservice Inspection of PWR Steam Generator Tubes''] considerations, implementation of the bobbin probe voltage based interim tube plugging criteria of 2.0 volts is supplemented by enhanced eddy current inspection guidelines to provide consistency in voltage normalization, a 100% eddy current inspection sample size at the tube support plant elevations per T/S, and MRPC [Motorized Rotating Pancake Coil] inspection requirements for the larger indications left in service to characterize the principal degradation as ODSCC.

As noted previously, implementation of the tube support plate elevation plugging criteria will decrease the number of tubes which must be repaired. The installation of SG tube plugs reduces the RCS flow margin. Thus, implementation of the IPC will maintain the margin of flow that would otherwise be reduced in the event of increased tube plugging.

Based on the above, it is concluded that the proposed license amendment request does not result in a significant reduction in margin with respect to plant safety as defined in the Final Safety Analysis Report or any Bases of the plant T/Ss.

The NRC staff has reviewed the licensee's analysis and, based on this review, it appears that the three standards of 10 CFR 50.92(c) are satisfied. Therefore, the NRC staff proposes to determine that the amendment request involves no significant hazards consideration.

Local Public Document Room location: Maud Preston Palenske Memorial Library, 500 Market Street, St. Joseph, Michigan 49085

Attorney for licensee: Gerald Charnoff, Esq., Shaw, Pittman, Potts and Trowbridge, 2300 N Street, NW, Washington, DC 20037

NRC Project Director: John N. Hannon

Indiana Michigan Power Company, Docket Nos. 50-315 and 50-316, Donald C. Cook Nuclear Plant, Unit Nos. 1 and 2, Berrien County, Michigan

Date of amendment requests: May 26, 1995 (AEP:NRC:1207)

Description of amendment requests: The proposed amendments would change multiple operating limits on both units. The primary change would allow operation of Cook Unit 1 with steam generator plugging levels as high as 30% in each steam generator. The second group of changes would modify the overtemperature delta T and overpower delta T reactor trip setpoints for both units and increase the allowed degradation of the Unit 1 auxiliary feedwater pumps consistent with Unit 2. The third group of changes would reduce the required shutdown margin in modes 1, 2, 3, and 4, increase the allowable centrifugal charging pump head degradation, reduce the minimum refueling water storage tank temperature, and revise the peak pressure of the long-term containment integrity analysis in the bases. Finally, certain administrative changes are also proposed.

Basis for proposed no significant hazards consideration determination: As required by 10 CFR 50.91(a) the licensee has provided its analysis of the issue of no significant hazards consideration, which is presented below:

10 CFR 50.92 specifies that the holder of an operating license or construction permit of a nuclear power facility participate in determining whether a change to the T/S's current licensing basis (CLB) involves a significant hazards consideration. Prior to implementation of a change to the CLB, the Nuclear Regulatory Commission must review and make a final determination, pursuant to the procedures in 10 CFR 50.91, that a proposed amendment to the operating license involves no significant hazards considerations. In order to satisfactorily complete the review, the proposed amendment to the CLB must not:

1. involve a significant increase in the probability or consequences of an accident previously evaluated,

2. create the possibility of a new or different kind of accident from any accident previously evaluated, or

3. involve a significant reduction in a margin of safety.

For the purpose of performing a significant hazards consideration analysis, the four groups of technical specification changes discussed under Description of Changes can be reduced to three groups. In evaluating significant hazards, the first three groups of proposed technical specifications will be considered together. The miscellaneous change and the administrative change will each be considered separately.

Determination Of No Significant Hazards For Changes Based On Analyses And Evaluations (Groups 1, 2, and 3)

Criterion 1

Do the proposed changes involve a significant increase in the probability or consequences of an accident previously evaluated?

No. The analyses which were performed to support the first three groups of proposed changes were performed in accordance with approved methodologies and acceptance criteria applicable to Cook Nuclear Plant. The proposed technical specification changes do not involve postulated initiators for analyzed events. Therefore, the probability of accidents can not be affected. The analyses and evaluations performed all met applicable acceptance criteria. Therefore, the consequences of accidents previously evaluated are unaffected.

Criterion 2

Do the proposed changes create the possibility of a new or different kind of accident from any accident previously evaluated?

No. The analyses which were performed to support the second and third groups of proposed changes address increases in operating margin for accident mitigators. They do not create the possibility of new accidents. The first group of proposed changes to reduce minimum measured primary flow, increase the DNB [departure from nucleate boiling] temperature limit, and reduce the reactor coolant system volume have been analyzed or evaluated. The proposed DNB limit is consistent with the DNB design and does not constitute an accident initiator. The new volume results from the new value of allowed tube plugging and is consistent with the analysis. It is not an accident initiator.

The impact of the reduced primary flow in the primary system was analyzed or evaluated, as appropriate. All applicable criteria were satisfied. No new or different kind of accident resulted.

Criterion 3

Do the proposed changes involve a significant reduction in a margin of safety?

No. The margin of safety is provided for the primary pressure boundary and other components in part by applicable design codes. The margin of safety for the various accidents and transients is maintained by the analysis acceptance criteria. Since the components remain in compliance with the codes and standards in effect when Cook Nuclear Plant was licensed and applicable acceptance criteria are met, the margin of safety is not reduced by the 30% SGTP [steam generator tube plugging] program.

Determination Of No Significant Hazards For Administrative Changes (Group 4)

Criterion 1

Does the proposed change involve a significant increase in the probability or consequences of an accident previously evaluated?

No. The proposed change involves the surveillances for mitigating equipment. Therefore, it has no impact on probability. The proposed change also has no impact on the consequences of an accident because the criteria for operable RHR [residual heat removal] and SI [safety injection] pumps does not change. The change is only in the parameter that will be compared with the required criteria, the differential pressure instead of the discharge pressure.

Criterion 2

Does the proposed change create the possibility of a new or different kind of accident from any accident previously evaluated?

No. Nothing is changed with regard to accident initiators. The surveillance criteria for the RHR and SI pumps, which are mitigating equipment, is unchanged. The proposed change can have no impact on accident initiators.

Criterion 3

Does the proposal involve a significant reduction in a margin of safety?

No. The proposal does not change the requirements for a pump to be operable. Only the parameter compared to acceptance criteria changes. The underlying criteria is unchanged. Therefore, there is no change in the margin of safety.

Conclusion

It is concluded that operation of Cook Nuclear Plant units 1 and 2 with the changes proposed above does not involve any significant hazards as defined in 10 CFR 50.92

The NRC staff has reviewed the licensee's analysis and, based on this review, it appears that the three standards of 10 CFR 50.92(c) are satisfied. Therefore, the NRC staff proposes to determine that the amendment requests involve no significant hazards consideration.

Local Public Document Room location: Maud Preston Palenske Memorial Library, 500 Market Street, St. Joseph, Michigan 49085

Attorney for licensee: Gerald Charnoff, Esq., Shaw, Pittman, Potts and Trowbridge, 2300 N Street, NW, Washington, DC 20037

NRC Project Director: John N. Hannon

Indiana Michigan Power Company, Docket Nos. 50-315 and 50-316, Donald C. Cook Nuclear Plant, Unit Nos. 1 and 2, Berrien County, Michigan

Date of amendment requests: June 15, 1995 (AEP:NRC:0896V)

Description of amendment requests: The proposed amendments would change the 18 month emergency diesel generator (EDG) surveillance test from a 24-hour run to an 8-hour run.

Basis for proposed no significant hazards consideration determination: As required by 10 CFR 50.91(a) the licensee has provided its analysis of the issue of no significant hazards consideration, which is presented below:

Per 10 CFR 50.92, a proposed change does not involve a significant hazards consideration if the change does not:

1. involve a significant increase in the probability or consequences of an accident previously evaluated,

2. create the possibility of a new of different kind of accident from any accident previously evaluated, or

3. involve a significant reduction in a margin of safety.

Criterion 1

The safety function of the EDGs is to supply ac electrical power to plant safety systems whenever the preferred ac power supply is unavailable. Through surveillance requirements, the ability of the EDGs to meet their load and timing requirements is tested and the quality of the fuel and the availability of the fuel supply are monitored. Reduction of the 24 hour run to 8 hours will not reduce the surveillance factors under consideration and will sufficiently exercise the EDG and its support systems to identify potential conditions that could lead to performance degradation. Based on these considerations, it is concluded that the proposed changes do not involve a significant increase in the probability or consequences of an accident previously evaluated.

Criterion 2

The proposed changes do not involve physical changes to the plant or changes in plant operating configuration. The changes only involve the reduction of 18 month 24 hour EDG surveillance test duration. Thus, it is concluded that the proposed changes do not create the possibility of a new or different kind of accident from any accident previously evaluated.

Criterion 3

Although the duration of the 18 month 24 hour EDG surveillance test would be reduced, the EDG components will continue to be sufficiently exercised such that the ability to detect incipient and degraded conditions will be maintained. The proposed changes have been determined to be compatible with our plant operating experience and commensurate with past surveillance test results. Based on these considerations, it is concluded that the proposed changes do not involve a significant reduction in a margin of safety.

The NRC staff has reviewed the licensee's analysis and, based on this review, it appears that the three standards of 10 CFR 50.92(c) are satisfied. Therefore, the NRC staff proposes to determine that the amendment requests involve no significant hazards consideration.

Local Public Document Room location: Maud Preston Palenske Memorial Library, 500 Market Street, St. Joseph, Michigan 49085

Attorney for licensee: Gerald Charnoff, Esq., Shaw, Pittman, Potts and Trowbridge, 2300 N Street, NW, Washington, DC 20037

NRC Project Director: John N. Hannon

Nebraska Public Power District, Docket No. 50-298, Cooper Nuclear Station, Nemaha County, Nebraska

Date of amendment request: June 15, 1995

Description of amendment request: The proposed amendment would revise

the definition for logic system functional test and revise the surveillance interval for emergency core cooling system logic system functional testing from 6 months to 18 months.

Basis for proposed no significant hazards consideration determination: As required by 10 CFR 50.91(a) the licensee has provided its analysis of the issue of no significant hazards consideration, which is presented below:

1. Does the proposed change involve a significant increase in the probability or consequences of an accident previously evaluated?

The proposed revisions to change the Cooper Nuclear Station (CNS) Emergency Core Cooling System (ECCS) logic system functional testing surveillance intervals from once/6 months to once/18 months do not involve a significant increase in the probability or consequences of an accident previously evaluated. The change in surveillance interval to once/18 months is necessary to coincide with scheduled refueling outages. The expansion of the scope of the logic system functional tests will ensure that once/18 months all contacts providing an automatic safety function in the ECCS logic systems will be tested. Revising the test frequency to once/18 months will prevent CNS from being required to install jumpers and/or test blocks during power operation, temporarily rendering various safety functions inoperable, and potentially challenging safety systems.

This proposed change will not result in any hardware changes to the facility, nor will it introduce any new mode of operation. Conversely, not changing the surveillance frequency would contribute to a slight, but measurable increase in the probability of an accident. Therefore, this change will not result in a significant increase in the probability of any accident previously evaluated.

This change will not result in a significant increase in the consequences of any accident previously evaluated. The District has evaluated the change in logic system reliability due to the increased proposed surveillance interval and determined it to be negligible. This conclusion is supported by a review of the surveillance history associated with the ECCS logic system functional tests which demonstrates that the logic systems perform reliably. Therefore, this change will not result in a significant reduction in the reliability or performance of the ECCS, and therefore, will not result in a significant increase in the consequences of any accident previously evaluated.

The change to the definition for ''Logic System Functional Test'' will not result in an increase in the probability or consequences of any accident previously evaluated. This change will only provide clarification of the definition for performing these tests.

These changes are also consistent with the NUREG-1433, ''Standard Technical Specifications, General Electric Plants, BWR/4,'' dated September, 1992. Therefore, these changes have been previously reviewed and accepted by the NRC, and have been implemented at other plants.

2. Does the proposed change create the possibility for a new or different kind of accident from any accident previously evaluated?

The proposed changes revise the ECCS logic system functional testing surveillance intervals and the definition of that testing to be consistent with the Standard Technical Specifications, and therefore reflect current NRC guidance. The proposed changes do not involve any plant design changes nor any new mode of operation. Therefore, these proposed changes do not create the possibility for a new or different kind of accident from any accident previously evaluated.

3. Does the proposed change create a significant reduction in the margin of safety?

The proposed changes to the CNS ECCS logic system functional testing surveillance intervals do not create a significant reduction in the margin of safety. As discussed above, the District has revised its logic system functional testing to ensure that all contacts providing an automatic safety function in the ECCS logic systems are tested during this surveillance; thus, this change in testing scope will ensure that all essential functions in these logic systems are periodically tested.

The proposed changes will extend the ECCS logic system functional testing intervals to coincide with refueling outages. This will prevent CNS from being required to install jumpers and/or test blocks during power operation which would temporarily defeat safety system capability, and have the potential of challenging plant safety systems and/or degrading logic system reliability. The District has also determined that the change in test frequency will have a negligible impact on logic system reliability. Therefore, since these changes will continue to ensure the reliability of the ECCS logic systems, and thereby the capability of those systems to respond to accidents, these proposed changes do not create a significant reduction in the margin of safety.

The NRC staff has reviewed the licensee's analysis and, based on this review, it appears that the three standards of 10 CFR 50.92(c) are satisfied. Therefore, the NRC staff proposes to determine that the amendment request involves no significant hazards consideration.

Local Public Document Room location: Auburn Public Library, 118 15th Street, Auburn, NE 68305

Attorney for licensee: Mr. G.D. Watson, Nebraska Public Power District, Post Office Box 499, Columbus, Nebraska 68602-0499

NRC Project Director: William D. Beckner

Northeast Nuclear Energy Company (NNECO), Docket No. 50-245, Millstone Nuclear Power Station, Unit 1, New London County, Connecticut

Date of amendment request: June 15, 1995

Description of amendment request: The proposed amendment would change the definition for an alteration of the reactor core to one that is consistent with the intent of the improved standard technical specifications. The proposed amendment also makes administrative changes to several technical specification pages.

Basis for proposed no significant hazards consideration determination: As required by 10 CFR 50.91(a) the licensee has provided its analysis of the issue of no significant hazards consideration, which is presented below:

NNECO has reviewed the proposed changes in accordance with 10CFR50.92 and concluded that the changes do not involve a significant hazards consideration (SHC). The basis for this conclusion is that the three criteria of 10CFR50.92(c) are not compromised. The proposed changes do not involve an SHC because the changes would not:

1. Involve a significant increase in the probability or consequences of an accident previously analyzed.

Revising the definition of core alteration would not affect the probability or consequences of a fuel handling accident, since the movement of fuel within the reactor vessel would still be considered a CORE ALTERATION. Additionally, movement of a fuel assembly continues to be performed under the supervision of a senior licensed operator. Therefore, the potential for inadvertent positioning of a fuel assembly would not be affected by the change to the definition of a core alteration.

Other activities which were not specifically excluded as core alterations in the existing technical specifications are now excluded. These activities do not affect the reactivity of the core.

Based upon the above, the proposed changes do not involve a significant increase in the probability or consequences of an accident previously evaluated.

2. Create the possibility of a new or different kind of accident from any previously analyzed.

All required systems will continue to operate as before. Therefore, there is no possibility of a new or different kind of accident. The change in definition of a core alteration cannot create the possibility of a new type of accident since those activities which affect reactivity and could affect the initiating events for accidents will remain classified as core alterations.

3. Involve a significant reduction in the margin of safety.

Refueling operations which have the potential to alter the reactivity potential of the core will continue to be defined as core alterations. The margin of safety associated with those evolutions will not be altered as a result of the revised definition. As a result of the revised definition, evolutions which take place within the reactor vessel core region with the vessel head installed, or with the reactor vessel completely defueled, will not be considered core alterations. This does not constitute a reduction in the margin of safety since there is no impact on core reactivity potential during these conditions.

The NRC staff has reviewed the licensee's analysis and, based on this review, it appears that the three standards of 10 CFR 50.92(c) are satisfied. Therefore, the NRC staff proposes to determine that the amendment request involves no significant hazards consideration.

Local Public Document Room location: Learning Resources Center, Three Rivers Community-Technical College, 574 New London Turnpike, Norwich, CT 06360

Attorney for licensee: Ms. L. M. Cuoco, Senior Nuclear Counsel, Northeast Utilities Service Company, Post Office Box 270, Hartford, CT 06141-0270

NRC Project Director: Phillip F. McKee

North Atlantic Energy Service Corporation, Docket No. 50-443, Seabrook Station, Unit No. 1, Rockingham County, New Hampshire

Date of amendment request: June 7, 1995

Description of amendment request: The proposed amendment would increase the temperature limit below which reactor coolant sampling and analysis for dissolved oxygen is not required. Specifically, the temperature limit stated in the footnotes to Technical Specification Surveillance Requirement 4.4.7 and to Table 3.4-2 would be increased to 250°F from 180°F.

Basis for proposed no significant hazards consideration determination: As required by 10 CFR 50.91(a) the licensee has provided its analysis of the issue of no significant hazards consideration. The NRC staff has reviewed the licensee's analysis against the standards of 10 CFR 50.92(c). The NRC staff's review is presented below.

A. The changes do not involve a significant increase in the probability or consequences of an accident previously evaluated (10 CFR 50.92(c)(1)) because the proposed changes merely increase the temperature limit below which sampling of reactor coolant for dissolved oxygen and maintaining the dissolved oxygen below the specified limit would not be required. The proposed limit is consistent with data which shows that there is no significant oxygen-induced corrosion to reactor coolant system (RCS) components at or below the limit. The changes do not affect the manner by which the facility is operated and do not change any structures, systems, or components. Since there is no change to the facility or to the way it is operated, there is no effect upon the probability or consequences of any accident previously analyzed.

B. The changes do not create the possibility of a new or different kind of accident from any accident previously evaluated (10 CFR 50.92(c)(2)) because they do not affect the manner by which the facility is operated or change any structure, system, or component. The proposed changes merely raise the temperature limit above which dissolved oxygen must be maintained within the specified limit. The changes are consistent with data for oxygen-induced corrosion of RCS components.

C. The changes do not involve a significant reduction in a margin of safety (10 CFR 50.92(c)(3)) because the proposed changes are consistent with data for oxygen-induced corrosion of RCS components.

Based on this review, it appears that the three standards of 10 CFR 50.92(c) are satisfied. Therefore, the NRC staff proposes to determine that the amendment request involves no significant hazards consideration.Local Public Document Room location: Exeter Public Library, Founders Park, Exeter, NH 03833

Attorney for licensee: Thomas Dignan, Esquire, Ropes & Gray, One International Place, Boston MA 02110-2624

NRC Project Director: Phillip F. McKee

Pacific Gas and Electric Company, Docket Nos. 50-275 and 50-323, Diablo Canyon Nuclear Power Plant, Unit Nos. 1 and 2, San Luis Obispo County, California

Date of amendment requests: June 29, 1995 (Reference LAR 95-04)

Description of amendment requests: The proposed amendments would revise the combined Technical Specifications (TS) for the Diablo Canyon Nuclear Power Plant, Unit Nos. 1 and 2, to add Mode 1 applicability to TS 3/4.4.2.2, ''Safety Valves - Operating,'' and to change the low-temperature overpressure protection (LTOP) system enable temperature for Mode 4 applicability from 323 degrees F to 270 degrees F in TS 3/4.4.2.1, ''Safety Valves - Shutdown.''

Basis for proposed no significant hazards consideration determination: As required by 10 CFR 50.91(a) the licensee has provided its analysis of the issue of no significant hazards consideration, which is presented below:

1. The proposed change does not involve a significant increase in the probability or consequences of an accident previously evaluated.

The proposed changes have no effect on plant operation. The proposed changes correct the applicability of TS 3/4.4.2.2, consistent with the NRC safety evaluation for License Amendments (LAs) 98 for Unit 1 and 97 for Unit 2, and LAs 100 for Unit 1 and 99 for Unit 2 dated March 9, 1995, and April 13, 1995, respectively.

Therefore, the proposed changes do not involve a significant increase in the probability or consequences of an accident previously evaluated.

2. The proposed change does not create the possibility of a new or different kind of accident from any accident previously evaluated.

The proposed changes are administrative in nature. Further, the proposed changes would not result in any physical alteration to any plant system, and would not be a change in the method by which any safety-related system performs its function.

Therefore, the proposed changes do not create the possibility of a new or different kind of accident from any accident previously evaluated.

3. The proposed change does not involve a significant reduction in a margin of safety.

The proposed administrative changes correct TS 3/4.4.2.2 applicability, consistent with previous NRC review and approval of LAs 98 and 97 and LAs 100 and 99, as described in the associated safety evaluations. Further, these proposed changes have no effect on current operating methodologies or actions that govern plant performance.

Therefore, the proposed changes do not involve a significant reduction in a margin of safety.

The NRC staff has reviewed the licensee's analysis and, based on this review, it appears that the three standards of 50.92(c) are satisfied. Therefore, the NRC staff proposes to determine that the amendment requests involve no significant hazards consideration.

Local Public Document Room location: California Polytechnic State University, Robert E. Kennedy Library, Government Documents and Maps Department, San Luis Obispo, California 93407

Attorney for licensee: Christopher J. Warner, Esq., Pacific Gas and Electric Company, P.O. Box 7442, San Francisco, California 94120

NRC Project Director: William H. Bateman

Philadelphia Electric Company, Docket Nos. 50-352 and 50-353, Limerick Generating Station, Units 1 and 2, Montgomery County, Pennsylvania

Date of amendment request: June 5, 1995

Description of amendment request: The proposed changes will revise Technical Specification (TS) Section 3/4.1.5, ''Standby Liquid Control System,'' (SLCS), to remove the minimum flow rate requirement for the SLCS pumps from TS Section 3/4.1.5.

Basis for proposed no significant hazards consideration determination: As required by 10 CFR 50.91(a) the licensee has provided its analysis of the issue of no significant hazards consideration, which is presented below:

1. The proposed Technical Specifications (TS) change does not involve a significant increase in the probability or consequences of an accident previously evaluated.

The proposed TS change will remove the minimum flow rate requirement for the Standby Liquid Control System (SLCS) pumps from Technical Specifications Section 3/4.1.5. The proposed TS change does not involve any physical change in the plant configuration or the SLCS pumps operation. The SLCS is not used during normal plant operation; therefore, there is no impact on any accident initiators. The proposed TS change does not change the plant response to transients in any way that could increase the likelihood of an accident. The consequences of previously evaluated accidents are not affected since the SLCS pumps and the balance of the SLCS will continue to perform as designed, in accordance with the Anticipated Transient Without Scram (ATWS) Rule specified in 10CFR50.62. The SLCS pumps will continue to be tested periodically for operability in accordance with TS 4.0.5 Surveillance Requirements for American Society of Mechanical Engineers (ASME) Boiler and Pressure Vessel (B & PV) Code Class 2 pumps, and the testing frequency remains unchanged.

Therefore, the proposed TS change does not involve an increase in the probability or consequences of an accident previously evaluated.

2. The proposed TS change does not create the possibility of a new or different kind of accident from any accident previously evaluated.

The proposed TS change will remove the minimum flow rate requirement for the Standby Liquid Control System (SLCS) pumps from Technical Specifications Section 3/4.1.5. The SLCS and the SLCS pumps will continue to function as currently designed. There are no physical changes being performed to the SLCS or plant configuration. The proposed TS change does not introduce a new failure mode for the SLCS pumps. Physical and electrical redundancy and separation criteria are not impacted by this proposed TS change. There is no change to the Redundant Reactivity Control System (RRCS) logic which could create an accident or transient of a different type.

Therefore, the proposed TS change does not create the possibility of a new or different kind of accident, from any accident previously evaluated.

3. The proposed TS change does not involve a significant reduction in a margin of safety.

The following TS Bases were reviewed for potential reduction in the margin of safety:

3/4.1.5 Standby Liquid Control System

4.0.5 Surveillance Requirements

The margin of safety as defined in the TS Bases will remain the same. The specific flow rate requirement for the Standby Liquid Control System (SLCS) pumps is being removed from the TS since the Anticipated Transient Without Scram (ATWS) equation ensures acceptable flow rates. The SLCS pumps, which are safety-related, are not physically modified or impacted by the proposed TS change. The pumps will continue to be tested for operability, in accordance with TS 4.0.5 Surveillance Requirements for ASME B & PV Code Class 2 pumps, and the testing frequency remains unchanged. This testing will ensure that the SLCS pumps operate in accordance with the existing design basis for the SLCS.

Therefore, the proposed TS change does not involve a reduction in a margin of safety.

The NRC staff has reviewed the licensee's analysis and, based on this review, it appears that the three standards of 10 CFR 50.92(c) are satisfied. Therefore, the NRC staff proposes to determine that the amendment request involves no significant hazards consideration.

Local Public Document Room location: Pottstown Public Library, 500 High Street, Pottstown, Pennsylvania 19464

Attorney for licensee: J. W. Durham, Sr., Esquire, Sr. V. P. and General Counsel, Philadelphia Electric Company, 2301 Market Street, Philadelphia, Pennsylvania 19101

NRC Project Director: John F. Stolz

Sacramento Municipal Utility District (SMUD), Docket No. 50-312, Rancho Seco Nuclear Station, Sacramento County, California

Date of amendment request: June 20, 1995

Description of amendment request: The proposed amendment (PA-190) would permit SMUD to change the reviewer qualifications of the Permanently Defueled Technical Specification (PDTS) D6.5.3 from those required by ANSI N18.1-1971, Section 4.4 to those of Section 4. In addition, PDTS D6.9.6b, Environmental Reports, would be changed to permit annual reporting instead of the current semi-annual schedule.

Basis for proposed no significant hazards consideration determination: As required by 10 CFR 50.91(a) the licensee has reviewed the proposed changes against each of the no significant hazards consideration criteria in 10 CFR 50.92, and, based on their safety analysis, concludes:

A significant increase in the probability or consequences of an accident previously evaluated will not be created, because the proposed PDTS changes (1) are administrative in nature, (2) have no effect on any credible accidents previously evaluated in the Rancho Seco Defueled Safety Analysis Report (DSAR) (i.e., the dropped fuel assembly accident, the loss of off-site power condition, or a radwaste tank rupture), (3) will not reduce the effectiveness of the reviews conducted because the Rancho Seco Qualified Reviewer training program ensures Qualified Reviewers have adequate skills to competently perform the required reviews and the Plant Review Committee will continue to conduct their second level review function, and (4) will only affect the timing and management of the required Environmental Reports submittals to the NRC.

PA-190 will not create the possibility of a new or different type of accident than previously evaluated, because the proposed PDTS changes (1) do not modify the configuration of the facility or affect facility operation during the PDM [permanently defueled mode], (2) are administrative in nature, and (3) do not provide any new mechanisms by which an accident can occur.

The proposed PDTS amendment will not involve a significant reduction in the margin of safety, because the proposed changes do not affect the operation of Rancho Seco or any plant systems. Also, The PDTS bases do not rely on (1) Qualified Reviewer qualification requirements or (2) submittal of PDTS D6.9.6b Environmental Reports to the NRC to provide a margin of safety for plant operation during the PDM. The Rancho Seco Qualified Reviewer program relies on training and not the ANSI N18.1 qualification requirements to ensure the PDTS D6.5.3 required reviews are competently performed. Therefore, the proposed changes will not involve a reduction in a margin of safety.

The NRC staff has reviewed the licensee's analysis, and based on this review, it appears that the three standards of 50.92(c) are satisfied. Therefore, the NRC staff proposes to determine that the amendment request involves no significant hazards consideration. Local Public Document Room location: Central Library, Government Documents, 828 I Street, Sacramento, CA 95814

Attorney for licensee: Dana Appling, Esq., Sacramento Municipal Utility District, P. O. Box 15830, Sacramento, CA 95852-1830

NRC Project Director: Seymour H. Weiss

South Carolina Electric & Gas Company, South Carolina Public ServiceAuthority, Docket No. 50-395, Virgil C. Summer Nuclear Station, Unit No. 1, Fairfield County, South Carolina

Date of amendment request: June 19, 1995

Description of amendment request: The proposed amendment would revise the Technical Specifications (TS) to delete the scheduler requirements for Type A testing (Overall Integrated Containment Leakage Rate) to be performed at 40 plus or minus 10 month intervals and to delete the schedular requirements for Type B and C tests to be performed at 24 month intervals.

Basis for proposed no significant hazards consideration determination: As required by 10 CFR 50.91(a) the licensee has provided its analysis of the issue of no significant hazards consideration, which is presented below:

1. The probability or consequences of an accident previously evaluated is not significantly increased.

There is no increase in the probability of an accident since there is no work planned that would affect containment integrity. The testing of containment isolation valves and

other containment penetration sealing devices is not postulated as an accident precursor or initiating event.

Type A testing is capable of determining the total leakage from both local leak paths as well as gross containment leakage paths. Our Type B and C testing has consistently provided accurate leakage rates for valves and penetrations.

Administrative controls govern maintenance and testing such that there is very low probability that unacceptable maintenance or alignments can occur. After maintenance on containment isolation valves (CIVs) and penetrations, a local leak rate test (LLRT) is required to be performed. All work on valves also requires that an independent valve lineup be performed. As a result, Type A testing is not required to accurately quantify the leakage through containment penetrations.

Any specific exemptions to the requirements of Appendix J will require approval by the NRC before implementation. The proposed change in itself does not affect reactor operations and does not change radiological consequences.

Therefore, this proposed change does not involve a significant increase in the possibility or consequences of an accident previously evaluated.

2. The possibility of an accident or a malfunction of a different type than any previously evaluated is not created.

The proposed TS change request (TSCR) does not involve any physical changes to the plant, affect the operation of the plant, or change testing methods or acceptance criteria. The history of containment testing verifies that containment integrity has been maintained.

The scheduler change that is proposed should not significantly decrease the level of confidence in the ability of the reactor building to limit offsite doses to allowable values. No accident or malfunction can be the result of the change in test schedule or frequency.

Since the proposed TSCR will not directly impact equipment, procedures or operations, the changes will not create the possibility of any new or different kind of accident from any previously evaluated.

3. The margin of safety has not been significantly reduced.

The reason for performing ILRTs [integrated leakage rate tests] is to assure that the leakage paths are identified, and any accident release will be restricted to those paths assumed in

the safety analysis. The purpose for the schedule is to assure that containment integrity is verified on a periodic basis.

Revising the schedule does not mean that containment integrity will be compromised. Type B and C testing will still be performed. The requirements in 10 CFR 50 Appendix J still require the testing to be performed periodically.

The testing previously performed has shown that acceptable results were obtained. The ILRT results minus the LLRT results demonstrate that most of the increases in leakage are the result of LLRT increases. These changes in Type B and C leakage are tracked and corrective action is initiated at a specific action level.

Therefore, the margin of safety has not been significantly reduced.

The NRC staff has reviewed the licensee's analysis and, based on this review, it appears that the three standards of 10 CFR 50.92(c) are satisfied. Therefore, the NRC staff proposes to determine that the amendment request involves no significant hazards consideration.

Local Public Document Room location: Fairfield County Library, 300 Washington Street, Winnsboro, SC 29180

Attorney for licensee: Randolph R. Mahan, South Carolina Electric & Gas Company, Post Office Box 764, Columbia, South Carolina 29218

NRC Project Director: Frederick J. Hebdon

South Carolina Electric & Gas Company, South Carolina Public Service Authority, Docket No. 50-395, Virgil C. Summer Nuclear Station, Unit No. 1, Fairfield County, South Carolina

Date of amendment request: June 19, 1995

Description of amendment request: The proposed amendment would revise the Technical Specifications to change the required test frequency for the reactor building spray nozzle flow test from once per five years to once per ten years.

Basis for proposed no significant hazards consideration determination: As required by 10 CFR 50.91(a) the licensee has provided its analysis of the issue of no significant hazards consideration, which is presented below:

1. The probability or consequences of an accident previously evaluated is not significantly increased.

This change does not effect the probability or consequences of an accident. The Reactor Building Spray System is normally idle, with the exception of testing. The possibility of the introduction of foreign material or corrosion products to restrict flow is minimized because of the use of 304 stainless steel as construction material. This change results in an extension of the testing periodicity only.

2. The possibility of an accident or a malfunction of a different type than any previously evaluated is not created.

This change results in an extension of the testing periodicity only and does not result in an accident not previously evaluated.

3. The margin of safety has not been significantly reduced.

The Reactor Building Spray System is normally idle, with the exception of testing. The possibility of the introduction of foreign material or corrosion products to restrict flow is minimized because of the use of 304 stainless steel as construction material. Industry wide spray system reliability, as demonstrated by the performance of these tests, justifies this change in the frequency of the nozzle flow test. This results in an extension of the testing periodicity only and will not significantly reduce a margin of safety.

The NRC staff has reviewed the licensee's analysis and, based on this review, it appears that the three standards of 10 CFR 50.92(c) are satisfied. Therefore, the NRC staff proposes to determine that the amendment request involves no significant hazards consideration.

Local Public Document Room location: Fairfield County Library, 300 Washington Street, Winnsboro, SC 29180

Attorney for licensee: Randolph R. Mahan, South Carolina Electric & Gas Company, Post Office Box 764, Columbia, South Carolina 29218

NRC Project Director: Frederick J. Hebdon

Tennessee Valley Authority, Docket Nos. 50-327 and 50-328, Sequoyah Nuclear Plant, Units 1 and 2, Hamilton County, Tennessee

Date of amendment request: June 29, 1995 (TS 95-14)

Description of amendment request: The proposed change would, under certain stated administrative controls, allow both sets of containment personnel airlock doors to be open during core alterations and fuel movements. The administrative controls that would be added to Limiting Condition for Operation 3.9.4.b would allow both airlock doors to be open if one personnel airlock door in each airlock is capable of closure, and one train of the Auxiliary Building Gas Treatment System is operable in accordance with Specification 3.9.12. In addition, proposed changes to Surveillance Requirement 4.9.4 and 4.9.4.a would replace the requirement to determine that the containment building penetrations are in the ''closed/isolated'' condition with the need to determine that they are in the ''required'' condition, and delete the requirement to verify that the penetrations are in their required condition and the requirement to test the Containment Ventilation isolation valves ''within 100 hours prior to the start of'' core alterations or movement of irradiated fuel in the containment building. Related changes to the Bases would supply amplifying information.

Basis for proposed no significant hazards consideration determination: As required by 10 CFR 50.91(a) the licensee has provided its analysis of the issue of no significant hazards consideration, which is presented below:

TVA has evaluated the proposed technical specification (TS) change and has determined

that it does not represent a significant hazards consideration based on criteria established in 10 CFR 50.92(c). Operation of Sequoyah Nuclear Plant (SQN) in accordance with the proposed amendment will not:

1. Involve a significant increase in the probability or consequences of an accident previously evaluated.

The proposed change to TS 3.9.4, Containment Building Penetrations, would allow the containment personnel airlocks (PALs) to be open during fuel movement and core alteration. The PALs are not an initiator to any accident. The position of the PAL doors (open or closed) during fuel movement and core alterations has no affect on the probability of any accident previously evaluated.

All doses from a fuel handling accident (FHA) for the proposed change remain well below the 10 CFR 100 limits. The proposed change will reduce the dose to workers inside containment in the event of a FHA by allowing more rapid egress from containment. The wear on the PAL doors will significantly be decreased; therefore, increasing the reliability of the PAL doors in the event of an accident.

Since the probability of a FHA is not affected by the airlock door positions, and the doses remain within acceptable limits, the proposed change does not involve a significant increase in the probability or consequences of an accident previously evaluated.

2. Create the possibility of a new or different kind of accident from any previously analyzed.

As previously stated, the PAL doors are not accident initiators. The open PAL doors do not represent a significant change in the configuration of the plant; therefore, does not create a new or different type of accident from any previously analyzed.

3. Involve a significant reduction in a margin of safety.

The margin of safety provided for an FHA inside containment remains well below the 10 CFR 100 limits. Therefore, this proposed change to allow the PAL doors to remain open during fuel movement or core alterations does not involve a significant reduction in the margin of safety.

The NRC has reviewed the licensee's analysis and, based on thisreview, it appears that the three standards of 10 CFR 50.92(c) are satisfied. Therefore, the NRC staff proposes to determine that the amendment request involves no significant hazards consideration.

Local Public Document Room location: Chattanooga-Hamilton County Library, 1101 Broad Street, Chattanooga, Tennessee 37402

Attorney for licensee: General Counsel, Tennessee Valley Authority, 400 West Summit Hill Drive, ET 11H, Knoxville, Tennessee 37902

NRC Project Director: Frederick J. Hebdon

Washington Public Power Supply System, Docket No. 50-397, Nuclear Project No. 2, Benton County, Washington

Date of amendment request: September 2, 1992

Description of amendment request: The proposed amendment revises the surveillance criteria for the source range monitors (SRMs) to incorporate a more conservative signal-to-noise (S/N) ratio, as recommended by General Electric for this system.

Basis for proposed no significant hazards consideration determination: As required by 10 CFR 50.91(a) the licensee has provided its analysis of the issue of no significant hazards consideration. The NRC staff has reviewed the licensee's analysis against the standards of 10 CFR 50.92(c). The NRC staff's review is presented below:

1.

The proposed change does not involve a significant increase in the probability or consequences of an accident previously evaluated.

The SRM instrumentation is not assumed to be an initiator of any analyzed event. The SRM instrumentation provides monitoring of neutron flux levels to give the control room operator early indication of unexpected subcritical multiplication that could be indicative of an approach to criticality. As such, action could be taken on the indication to avert or minimize the consequences of the event. However, the SRM function is not relied upon in any design bases or transient analysis. Rod motion interlocks and other instrumentation are relied on in the accident analysis to avert an accident. The change in acceptable count rate and signal-to-noise ratio preserves the confidence level of the General Electric design. As a result, the consequences of any analyzed events are unaffected because the change does not alter any system or component design assumptions or operation. Therefore, no significant increase in the probability or consequences of an accident previously evaluated will be involved.

2.

The proposed change does not create the possibility of a new or different kind of accident from any accident previously evaluated.

The proposed change in SRM count rate and S/N ratio values does not change modes of plant operation or require physical modifications. The WNP-2 design basis accident and transient analyses do not rely on the SRMs to assume plant safety. Therefore, the proposed change does not create the possibility of a new or different kind of accident.

3.

The proposed change does not involve a significant reduction in a margin of safety.

The proposed change does not involve a significant reduction in a margin of safety. The design basis to assure SRM operability is based on an instrument count rate that will assure the SRMs will provide early indication of subcritical multiplication with a 95-percent confidence level. Requiring the count rate to be greater than or equal to 0.7 counts per second (cps) with a S/N ratio greater than or equal to 20, or greater than or equal to 3 cps with a S/N ratio greater than or equal to 2 (vs. a count rate of greater than or equal to 0.5 cps with a S/N ratio greater than or equal to 2 in current TS) ensures the design 95-percent confidence level is maintained when verifying SRM operability. Therefore, the margin of safety is not affected by this change.

Based on this review, it appears that the three standards of 50.92(c) are satisfied. Therefore, the NRC staff proposes to determine that the amendment request involves no significant hazards consideration.

Local Public Document Room location: Richland Public Library, 955 Northgate Street, Richland, Washington 99352

Attorney for licensee: M. H. Philips, Jr., Esq., Winston & Strawn, 1400 L Street, N.W., Washington, D.C. 20005-3502

NRC Project Director: William H. Bateman

Washington Public Power Supply System, Docket No. 50-397, Nuclear Project No. 2, Benton County, Washington

Date of amendment request: June 6, 1995

Description of amendment request: The proposed amendment would change Technical Specification 6.9.3.2. The change would add references to three topical reports describing analytical methods that may be used in determining reactor core operating limits for reload licensing applications.

Basis for proposed no significant hazards consideration determination: As required by 10 CFR 50.91(a) the licensee has provided its analysis of the issue of no significant hazards consideration, which is presented below:

1. The proposed change does not involve a significant increase in the probability or consequences of an accident previously evaluated.

The proposed amendment does not remove or modify existing Technical Specification

requirements or safety limits. The Technical Specifications will continue to require operations within analyzed core operating limits and appropriate actions be taken when, or if, limits are exceeded. There will be no changes to the physical design of the plant as a result of adding the proposed references to Section 6.9.3.2. The results of analytical determination of core operating limitations is not assumed as the initiator of any analyzed event, and the approved safety analysis is still applicable. Therefore, the proposed amendment to Technical Specification 6.9.3.2 does not involve a significant increase in the probability or consequences of an accident previously evaluated.

2. The proposed change does not create the possibility of a new or different kind of accident from any accident previously evaluated.

The proposed amendment does not remove or modify existing Technical Specification requirements or safety limits. The Technical Specifications will continue to require operation within analyzed core operating limits and appropriate actions be taken when, or if, limits are exceeded. The technical methodology outlined in the three new reports is in accordance with the accepted principals, and the specific reports proposed for inclusion in the Technical Specifications by this request have been previously approved by NRC for use at WNP-2 as a basis for core reload analyses. Therefore, the proposed amendment to Technical Specification 6.9.3.2 does not create the possibility of a new or different type of accident from any accident previously evaluated.

3. The proposed change does not involve a significant reduction in a margin of safety.

Plant safety limits are established through LCOs, limiting safety systems settings, and safety limits specified in the Technical Specifications. There will be no changes to either the physical design of the plant or to any of these settings and limits as a result of adding the proposed references to Section 6.9.3.2. The ability to mitigate the consequences of all accidents previously evaluated will be maintained and nuclear safety is not adversely affected because the technical methodology outlined in the three new reports is in accordance with accepted principals, and the specific reports proposed for inclusion in the Technical Specifications by this request have been previously approved by NRC for use at WNP-2 as a basis for core reload analyses. Therefore, the proposed amendment to Technical Specification 6.9.3.2 does not significantly reduce any margin of safety.

The NRC staff has reviewed the licensee's analysis and, based on this review, it appears that the three standards of 50.92(c) are satisfied. Therefore, the NRC staff proposes to determine that the amendment request involves no significant hazards consideration.

Local Public Document Room location: Richland Public Library, 955 Northgate Street, Richland, Washington 99352

Attorney for licensee: M. H. Philips, Jr., Esq., Winston & Strawn, 1400 L Street, N.W., Washington, D.C. 20005-3502

NRC Project Director: William H. Bateman

Washington Public Power Supply System, Docket No. 50-397, Nuclear Project No. 2, Benton County, Washington

Date of amendment request: June 6, 1995

Description of amendment request: The proposed amendment would change the Index of the WNP-2 technical specifications by deleting reference to the Bases pages. Consistent with the requirements of 10 CFR 50.36(a), which states that the Bases shall not become part of the technical specifications, the Bases information will be consolidated into a controlled plant document.

Basis for proposed no significant hazards consideration determination: As required by 10 CFR 50.91(a) the licensee has provided its analysis of the issue of no significant hazards consideration, which is presented below:

1. The proposed change does not involve a significant increase in the probability or consequences of an accident previously evaluated.

The proposed changes are administrative and do not remove or modify existing Technical Specification requirements or safety limits. There will be no changes to the physical design of the plant as a result of the proposed change. The Bases information, per 10 CFR 50.36(a), is not part of the Technical Specifications and will be consolidated into a controlled plant document. Future changes to the Bases will be evaluated per 10 CFR 50.59. Therefore, the proposed changes to the Technical Specification Index do not involve a significant increase in the probability or consequences of an accident previously evaluated.

2. The proposed change does not create the possibility of a new or different kind of accident from any accident previously evaluated.

The proposed changes are administrative and do not remove or modify existing Technical Specification requirements or safety limits. There will be no changes to the physical design of the plant or alteration of any operational practice as a result of the proposed change. The Bases information, per 10 CFR 50.36(a), is not part of the Technical Specifications and will be consolidated into a controlled document. Future changes to the Bases will be evaluated under 10 CFR 50.59. Therefore, the proposed changes to the Technical Specifications Index do not create the possibility of a new or different type of accident.

3. The proposed change does not involve a significant reduction in a margin of safety.

Plant safety limits are established through LCOs, limiting safety system settings, and safety limits specified in the Technical Specifications. There will be no changes to either the physical design of the plant or to any of these settings and limits as a result of modifying the Technical Specification Index. The ability to mitigate the consequences of all accidents previously evaluated will be maintained and nuclear safety is not impacted. The Bases information, per 10 CFR 50.36(a), is not part of the Technical Specifications and will be consolidated into a controlled document. Future changes to the Bases will be evaluated under 10 CFR 50.59. Therefore, the proposed amendment does not significantly reduce any margin of safety.

The NRC staff has reviewed the licensee's analysis and, based on this review, it appears that the three standards of 50.92(c) are satisfied. Therefore, the NRC staff proposes to determine that the amendment request involves no significant hazards consideration.

Local Public Document Room location: Richland Public Library, 955 Northgate Street, Richland, Washington 99352

Attorney for licensee: M. H. Philips, Jr., Esq., Winston & Strawn, 1400 L Street, N.W., Washington, D.C. 20005-3502

NRC Project Director: William H. Bateman

Washington Public Power Supply System, Docket No. 50-397, Nuclear Project No. 2, Benton County, Washington

Date of amendment request: June 6, 1995

Description of amendment request: The proposed amendment would change Technical Specification (TS) 6.0, ''Administrative Controls'' for WNP-2. Specifically, the changes would (a) reflect Supply System titles for senior management throughout TS 6.0, (b) modify the Plant Operations Committee (POC) composition to specify members according to functional areas rather than by organizational titles (c) replace the Plant Manager as the POC Chairman with an individual appointed by the Plant General Manager, and (d) make an editorial correction.

Basis for proposed no significant hazards consideration determination: As required by 10 CFR 50.91(a) the licensee has provided its analysis of the issue of no significant hazards consideration, which is presented below:

1. The proposed change does not involve a significant increase in the probability or consequences of an accident previously evaluated.

The senior management title changes are title changes only and will not impact the plant safety responsibilities associated with these positions. The removal of the Plant Operations Committee (POC) organizational

titles and replacement with functional areas, and the elimination of the Plant Manager as the POC Chairman, will not impact the POC function because membership qualifications will continue to be consistent with the unit staff qualifications in TS 6.3.1 for those POC members and alternates considered part of the unit staff. Those designated POC members and alternates not considered part of the unit staff will possess skills and knowledge commensurate with their organizational positions. The proposed change ensures that POC will continue to be comprised of personnel who are experienced, have varied expertise, and are involved in daily plant activities. In maintaining the qualification requirements for members of POC, the POC will continue to fulfill its review and advisory responsibilities specified in TS 6.5.1.6 and TS 6.5.1.7. The proposed changes do not involve any physical changes to plant systems, structures, or components (SSC) or the manner in which the SSC are operated, maintained, modified, tested, or inspected. The changes therefore do not involve a significant increase in the probability or consequences of an accident previously evaluated.

2. The proposed change does not create the possibility of a new or different kind of accident from any accident previously evaluated.

Because the proposed changes are of an organizational nature and their implementation does not involve physical changes to the plant SSC or the manner in which the SSC are operated and maintained, the proposed changes do not create the possibility of a new or different kind of accident. The proposed changes do not introduce any new modes of operation or alter system setpoints which could create a new or different kind of accident. Therefore, the possibility of a new or different kind of accident from any accident previously evaluated is not created.

3. The proposed change does not involve a significant reduction in a margin of safety.

The senior management title changes do not impact the management responsibilities or functions associated with ensuring plant safety. Changes proposed in the POC composition will allow the scope of available expertise to be expanded without changing the POC function or responsibilities. Maintaining the current level of personnel qualifications and experience ensures the POC will continue to meet its TS review and advisory requirements. The proposed changes will not impact the basis for any Technical Specification related to the establishment of, or maintenance of, nuclear safety margins. Therefore, operation of the facility in accordance with the proposed amendment does not involve a significant reduction in a margin of safety.

The NRC staff has revieywed the licensee's analysis and, based on this review, it appears that the three standards of 50.92(c) are satisfied. Therefore, the NRC staff proposes to determine that the amendment request involves no significant hazards consideration.

Local Public Document Room location: Richland Public Library, 955 Northgate Street, Richland, Washington 99352

Attorney for licensee: M. H. Philips, Jr., Esq., Winston & Strawn, 1400 L Street, N.W., Washington, D.C. 20005-3502

NRC Project Director: William H. Bateman

Notice Of Issuance Of Amendments To Facility Operating Licenses

During the period since publication of the last biweekly notice, the Commission has issued the following amendments. The Commission has determined for each of these amendments that the application complies with the standards and requirements of the Atomic Energy Act of 1954, as amended (the Act), and the Commission's rules and regulations. The Commission has made appropriate findings as required by the Act and the Commission's rules and regulations in 10 CFR Chapter I, which are set forth in the license amendment.

Notice of Consideration of Issuance of Amendment to Facility Operating License, Proposed No Significant Hazards Consideration Determination, and Opportunity for A Hearing in connection with these actions was published in the **Federal Register** as indicated.

Unless otherwise indicated, the Commission has determined that these amendments satisfy the criteria for categorical exclusion in accordance with 10 CFR 51.22. Therefore, pursuant to 10 CFR 51.22(b), no environmental impact statement or environmental assessment need be prepared for these amendments. If the Commission has prepared an environmental assessment under the special circumstances provision in 10 CFR 51.12(b) and has made a determination based on that assessment, it is so indicated.

For further details with respect to the action see (1) the applications for amendment, (2) the amendment, and (3) the Commission's related letter, Safety Evaluation and/or Environmental Assessment as indicated. All of these items are available for public inspection at the Commission's Public Document Room, the Gelman Building, 2120 L Street, NW., Washington, DC, and at the local public document rooms for the particular facilities involved.

Arizona Public Service Company, et al., Docket Nos. STN 50-528, STN 50-529, and STN 50-530, Palo Verde Nuclear Generating Station, Units 1, 2, and 3, Maricopa County, Arizona

Date of application for amendments: March 28, 1994

Brief description of amendments: The amendments change the minimum condensate storage tank indicated level from 25 feet to 29.5 feet to ensure that the condensate storage tank contains a sufficient volume of water. In addition, an editorial change was made to Technical Specification 3.7.1.3 for Unit 3 to be consistent with Units' 1 and 2 technical specifications.

Date of issuance: July 6, 1995

Effective date: July 6, 1995

Amendment Nos.: Unit 1 - Amendment No. 94; Unit 2 - Amendment No. 82; Unit 3 - Amendment No. 65

Facility Operating License Nos. NPF-41, NPF-51, and NPF-74: The amendments revised the Technical Specifications.

Date of initial notice in **Federal Register:** June 8, 1994 (59 FR 29625) The Commission's related evaluation of the amendments is contained in a Safety Evaluation dated July 6, 1995.No significant hazards consideration comments received: No.

Local Public Document Room location: Phoenix Public Library, 12 East McDowell Road, Phoenix, Arizona 85004.

Arizona Public Service Company, et al., Docket Nos. STN 50-528, STN 50-529, and STN 50-530, Palo Verde Nuclear Generating Station, Units 1, 2, and 3, Maricopa County, Arizona

Date of application for amendments: April 6, 1995, as supplemented by letter dated June 7, 1995.

Brief description of amendments: These amendments involve improvements delineated in Generic Letter 93-07, ''Modification of the Technical Specification Administrative Control Requirements for Emergency and Security Plans,'' changes in plant review board, and miscellaneous minor changes.

Date of issuance: July 7, 1995

Effective date: July 7, 1995

Amendment Nos.: Unit 1 - Amendment No. 95; Unit 2 - Amendment No. 83; Unit 3 - Amendment No. 66

Facility Operating License Nos. NPF-41, NPF-51, and NPF-74: The amendments revised the Technical Specifications.

Date of initial notice in **Federal Register:** May 23, 1995 (60 FR 27335) The June 7, 1995, letter provided clarifying information and did not change the initial no sigificant hazards consideration determination. The Commission's related evaluation of the amendments is contained in a Safety Evaluation dated July 7, 1995.No

significant hazards consideration comments received: No.

Local Public Document Room location: Phoenix Public Library, 12 East McDowell Road, Phoenix, Arizona 85004.

Commonwealth Edison Company, Docket Nos. 50-237 and 50-249, Dresden Nuclear Power Station, Units 2 and 3, Grundy County, Illinois Docket Nos. 50-254 and 50-265, Quad Cities Nuclear Power Station, Units 1 and 2, Rock Island County, Illinois

Date of application for amendments: February 16, 1993, as supplemented by letter dated May 2, 1995.

Brief description of amendments: This application upgrades the current custom Technical Specifications (TS) for Dresden and Quad Cities to the Standard Technical Specification contained in NUREG-0123, ''Standard Technical Specification General Electric Plants BWR/4.'' This application upgrades only Section 3/4.10 (Refueling Operations).

Date of issuance: June 23, 1995

Effective date: Immediately, to be implemented no later than December 31, 1995, for Dresden Station and June 30, 1996, for Quad Cities Station.

Amendment Nos.: 136, 130, 157, and 153

Facility Operating License Nos. DPR-19, DPR-25, DPR-29 and DPR-30. The amendments revised the Technical Specifications.

Date of initial notice in **Federal Register:** May 23, 1995 (60 FR 27337) The Commission's related evaluation of the amendments is contained in a Safety Evaluation dated June 23, 1995. No significant hazards consideration comments received: No Local Public

Document Room location: for Dresden, Morris Area Public Library District, 604 Liberty Street, Morris, Illinois 60450; for Quad Cities, Dixon Public Library, 221 Hennepin Avenue, Dixon, Illinois 61021.

Commonwealth Edison Company, Docket Nos. 50-295 and 50-304, Zion Nuclear Power Station Units 1 and 2, Lake County, Illinois

Date of application for amendments: December 23, 1994

Brief description of amendments: The amendments revise the Technical Specifications by increasing the allowable U-235 enrichment of fuel to be stored in the new fuel storage vault.

Date of issuance: June 22, 1995

Effective date: June 22, 1995

Amendment Nos.: 164 and 152

Facility Operating License Nos. DPR-39 and DPR-48: The amendments revised the Technical Specifications.

Date of initial notice in **Federal Register:** February 15, 1995 (60 FR 8742) The Commission's related evaluation of the amendments is contained in an Environmental Assessment dated June 8, 1995, and a Safety Evaluation dated June 22, 1995. No significant hazards consideration comments received: No

Local Public Document Room location: Waukegan Public Library, 128 N. County Street, Waukegan, Illinois 60085.

Commonwealth Edison Company, Docket Nos. 50-295 and 50-304, Zion Nuclear Power Station Units 1 and 2, Lake County, Illinois

Date of application for amendments: March 24, 1995

Brief description of amendments: The amendments recognize performing containment leakage rate tests in accordance with 10 CFR Part 50, Appendix J, and approved exemptions.

Date of issuance: June 30, 1995

Effective date: June 30, 1995

Amendment Nos.: 165 and 153

Facility Operating License Nos. DPR-39 and DPR-48: The amendments revised the Technical Specifications.

Date of initial notice in **Federal Register:** April 26, 1995 (60 FR 20516) The Commission's related evaluation of the amendments is contained in a Safety Evaluation dated June 30, 1995. No significant hazards consideration comments received: No

Local Public Document Room location: Waukegan Public Library, 128 N. County Street, Waukegan, Illinois 60085.

Duquesne Light Company, et al., Docket Nos. 50-334 and 50-412, Beaver Valley Power Station, Unit Nos. 1 and 2, Shippingport, Pennsylvania

Date of application for amendments: June 8, 1993, as supplemented June 15, 1995

Brief description of amendments: These amendments revise item 2 of Technical Specification 6.9.1.14, ''Core Operating Limits Report,'' for Unit 1 and Unit 2, to specify the use of the BASH methodology instead of an earlier Westinghouse methodology. The BASH methodology is a Westinghouse improved and updated methodology which can be used to evaluate a large break loss-of-coolant accident. The BASH methodology was approved by the NRC staff on November 13, 1986.

Date of issuance: June 27, 1995

Effective date: As of the date of issuance, to be implemented within 60 days

Amendment Nos.: 189 and 71

Facility Operating License Nos. DPR-66 and NPF-73: Amendments revised the Technical Specifications.

Date of initial notice in **Federal Register:** July 7, 1993 (58 FR 36433) The Commission's related evaluation of the amendments is contained in a Safety Evaluation dated June 27, 1995.No significant hazards consideration comments received: No.

Local Public Document Room location: B. F. Jones Memorial Library, 663 Franklin Avenue, Aliquippa, Pennsylvania 15001.

Entergy Operations, Inc., Docket No. 50-382, Waterford Steam Electric Station, Unit 3, St. Charles Parish, Louisiana

Date of amendment request: August 9, 1994

Brief description of amendment: The amendment changed the Appendix A Technical Specifications (TSs) by revising the Administrative Controls Section of the TSs for Waterford 3 by removing the functions under review and audit from the TSs and by relocating those items in the quality assurance program manual. In addition the amendment removed the review and audit functions for the emergency plan and implementing procedures, and security plan from the list of responsibilities of the plant operation review committee in the TSs. These requirements will be retained in emergency plan or security plan as appropriate.

Date of issuance: July 6, 1995

Effective date: July 6, 1995, to be implemented within 60 days.

Amendment No.: 109

Facility Operating License No. NPF-38. Amendment revised the Technical Specifications.

Date of initial notice in **Federal Register:** September 14, 1994 (59 FR 47167) The Commission's related evaluation of the amendment is contained in a Safety Evaluation dated July 6, 1995.No significant hazards consideration comments received: No. Local Public Document Room location: University of New Orleans Library, Louisiana Collection, Lakefront, New Orleans, LA 70122.

Florida Power and Light Company, et al., Docket Nos. 50-335 and 50-389, St. Lucie Plant, Unit Nos. 1 and 2, St. Lucie County, Florida

Date of application for amendments: April 3, 1995

Brief description of amendments: These amendments will incorporate line-item TS improvements to Specifications 3/4.8.1 ''Electrical Power Systems-A.C. Sources,'' and 4.8.1.2.2 ''Electrical Power Systems-Shutdown.'' The changes are consistent with

recommendations for Emergency Diesel Generator (EDG) Surveillance Requirements in NUREG-1366, and regulatory guidance provided in Generic Letter (GL) 93-05 and GL 94-01. This issuance also contains FPL's commitment to implement a maintenance program for monitoring and maintaining EDG performance for both St. Lucie Units consistent with 10 CFR 50.65 and the guidance of Regulatory Guide 1.160.

Date of Issuance: June 29, 1995

Effective Date: June 29, 1995

Amendment Nos.: 138 and 78

Facility Operating License Nos. DPR-67 and NPF-16: Amendments revised the Technical Specifications.

Date of initial notice in **Federal Register:** May 10, 1995 (60 FR 24910) The Commission's related evaluation of the amendments is contained in a Safety Evaluation dated June 29, 1995.No significant hazards consideration comments received: No.

Local Public Document Room location: Indian River Junior College Library, 3209 Virginia Avenue, Fort Pierce, Florida 34954-9003.

Georgia Power Company, Oglethorpe Power Corporation, Municipal Electric Authority of Georgia, City of Dalton, Georgia, Docket Nos. 50-424 and 50-425, Vogtle Electric Generating Plant, Units 1 and 2, Burke County, Georgia

Date of application for amendments: November 19, 1995

Brief description of amendments: The amendments relocate the requirements of Technical Specification 3/4.3.4, Turbine Overspeed Protection, to Section 16.3 of the Vogtle Final Safety Analysis Report (FSAR). In addition, the surveillance intervals for exercising the high pressure turbine stop valves, the low pressure turbine intermediate stop valves and intercept valves, and the high pressure turbine control valves are extended after relocation to the FSAR.

Date of issuance: July 3, 1995

Effective date: As of the date of issuance to be implemented within 30 days.

Amendment Nos.: 88 and 66

Facility Operating License Nos. NPF-68 and NPF-81: Amendments revised the technical Specifications.

Date of initial notice in **Federal Register:** February 16, 1994 (59 FR 7689) The Commission's related evaluation of the amendments is contained in a Safety Evaluation dated July 3, 1995.No significant hazards consideration comments received: No

Local Public Document Room location: Burke County Library, 412 Fourth Street, Waynesboro, Georgia 30830.

Georgia Power Company, Oglethorpe Power Corporation, Municipal Electric Authority of Georgia, City of Dalton, Georgia, Docket Nos. 50-424 and 50-425, Vogtle Electric Generating Plant, Units 1 and 2, Burke County, Georgia

Date of application for amendments: December 27, 1994

Brief description of amendments: The amendments revise the frequency of conducting leak testing of containment purge valves with seals made of resilient material from every 3 months to each refueling outage.

Date of issuance: July 7, 1995

Effective date: As of the date of issuance to be implemented within 30 days.

Amendment Nos.: 89 and 67

Facility Operating License Nos. NPF-68 and NPF-81: Amendments revised the Technical Specifications.

Date of initial notice in **Federal Register:** February 1, 1995 (60 FR 6301) The Commission's related evaluation of the amendments is contained in a Safety Evaluation dated July 7, 1995. No significant hazards consideration comments received: No

Local Public Document Room location: Burke County Library, 412 Fourth Street, Waynesboro, Georgia 30830.

Houston Lighting & Power Company, City Public Service Board of San Antonio, Central Power and Light Company, City of Austin, Texas, Docket Nos. 50-498 and 50-499, South Texas Project, Units 1 and 2, Matagorda County, Texas

Date of amendment request: February 15, 1995.

Brief description of amendments: The amendments modified (by relocation to the Technical Requirements Manual) Technical Specification (TS) 3/4.3.3.7, Chemical Detection Systems, and TS 3/4.8.4.1, Electrical Equipment Protective Devices - Containment Penetration Conductor Overcurrent Protective Devices, and the associated Bases.

Date of issuance: July 6, 1995

Effective date: July 6, 1995, to be implemented within 30 days.

Amendment Nos.: Unit 1 - Amendment No. 76; Unit 2 - Amendment No. 65

Facility Operating License Nos. NPF-76 and NPF-80. The amendments revised the Technical Specifications.

Date of initial notice in **Federal Register:** March 29, 1995 (60 FR 16189) The Commission's related evaluation of the amendments is contained in a Safety Evaluation dated July 6, 1995.No significant hazards consideration comments received: No

Local Public Document Room location: Wharton County Junior College, J. M. Hodges Learning Center, 911 Boling Highway, Wharton, TX 77488.

IES Utilities Inc., Docket No. 50-331, Duane Arnold Energy, Center, Linn County, Iowa

Date of application for amendment: March 28, 1995

Brief description of amendment: The amendment revises Technical Specifications (TS) Table 3.2-A by clarifying or correcting entries to the table. The amendment also revises the TS Bases to describe more clearly the logic arrangements in Table 3.2-A.

Date of issuance: June 14, 1995

Effective date: June 14, 1995

Amendment No.: 212

Facility Operating License No. DPR-49. Amendment revised the Technical Specifications.

Date of initial notice in **Federal Register:** April 26, 1995 (60 FR 20519) The Commission's related evaluation of the amendment is contained in a Safety Evaluation dated June 14, 1995.No significant hazards consideration comments received: No.

Local Public Document Room location: Cedar Rapids Public Library, 500 First Street, S. E., Cedar Rapids, Iowa 52401.

Indiana Michigan Power Company, Docket Nos. 50-315 and 50-316, Donald C. Cook Nuclear Plant, Unit Nos. 1 and 2, Berrien County, Michigan

Date of application for amendments: March 31, 1995

Brief description of amendments: The amendments modify the Containment Ventilation System Technical Specifications (and associated Bases) to allow limited containment purge operation in Modes 1, 2, 3, and 4 for pressure control, ALARA [as low as is reasonably achievable], and respirable air quality considerations.

Date of issuance: June 23, 1995

Effective date: June 23, 1995

Amendment Nos.: 195 and 181

Facility Operating License Nos. DPR-58 and DPR-74. Amendments revised the Technical Specifications.

Date of initial notice in **Federal Register:** April 26, 1995 (60 FR 20520) The Commission's related evaluation of the amendments is contained in a Safety Evaluation dated June 23, 1995.No significant hazards consideration comments received: No.

Local Public Document Room location: Maud Preston Palenske Memorial Library, 500 Market Street, St. Joseph, Michigan 49085.

Indiana Michigan Power Company, Docket No. 50-315, Donald C. Cook, Nuclear Plant, Unit No. 1, Berrien County, Michigan

Date of application for amendment: March 17, 1995

Brief description of amendment: The amendment allows a one-time extension of the required test interval for the overall integrated containment leak rate test (Type A test). This extension allows the third Type A test of the second 10-year service period to be performed during the refueling outage that will follow the end of Cycle 15. Concurrently, the Commission has also granted a one-time schedular exemption to allow an extension of one cycle for the performance of the 10 CFR Part 50, Appendix J, Type A test.

Date of issuance: July 6, 1995

Effective date: July 6, 1995

Amendment No.: 196

Facility Operating License No. DPR-58. Amendment revises the Technical Specifications.

Date of initial notice in **Federal Register:** April 26, 1995 (60 FR 20519) The Commission's related evaluation of the amendment is contained in a Safety Evaluation dated July 6, 1995.No significant hazards consideration comments received: No. Local Public

Document Room location: Maud Preston Palenske Memorial Library, 500 Market Street, St. Joseph, Michigan 49085.

Northern States Power Company, Docket Nos. 50-282 and 50-306, Prairie Island Nuclear Generating Plant, Unit Nos. 1 and 2, Goodhue County, Minnesota

Date of application for amendments: December 5, 1994, as supplemented January 9, 1995 and May 15, 1995.

Date of application for amendments: The amendments revise the Prairie Island Technical Specifications to allow containment airlock doors to remain open during core alterations provided certain conditions are met. In its May 15, 1995, letter, the licensee withdrew the portion of its original application which dealt with containment penetrations during core alterations. The staff granted the licensee's request to withdraw all aspects of its application concerning the opening of containment penetrations during core alterations.

Date of issuance: July 3, 1995

Effective date: July 3, 1995

Amendment Nos.: 119/112

Facility Operating License Nos. DPR-42 and DPR-60. Amendments revised the Technical Specifications.

Date of initial notice in **Federal Register:** February 1, 1995 (60 FR 6306). The January 9 and May 15, 1995, letters provided updated Technical Specification pages and clarifying information in response to discussions with the staff during various teleconferences conducted during the review process. This information was within the scope of the original application and did not change the staff's initial proposed no significant hazards consideration determination. The Commission's related evaluation of the amendment is contained in a Safety Evaluation dated July 3, 1995. No Significant hazards consideration comments received: No.

Local Public Document Room location: Minneapolis Public Library, Technology and Science Department, 300 Nicollet Mall, Minneapolis, Minnesota 55401.

Omaha Public Power District, Docket No. 50-285, Fort Calhoun Station, Unit No. 1, Washington County, Nebraska

Date of amendment request: February 10, 1995

Brief description of amendment: The amendment relocates the requirements for the incore instrumentation (ICI) system from the technical specifications to the Updated Safety Analysis Report (USAR).

Date of issuance: June 26, 1995

Effective date: June 26, 1995

Amendment No.: 167

Facility Operating License No. DPR-40. The amendment revised the Technical Specifications.

Date of initial notice in **Federal Register:** March 15, 1995 (60 FR 14025) The Commission's related evaluation of the amendment is contained in a Safety Evaluation dated June 26, 1995.No significant hazards consideration comments received: No.

Local Public Document Room location: W. Dale Clark Library, 215 South 15th Street, Omaha, Nebraska 68102.

Pacific Gas and Electric Company, Docket Nos. 50-275 and 50-323, Diablo Canyon Nuclear Power Plant, Unit Nos. 1 and 2, San Luis Obispo County, California

Date of application for amendments: April 19, 1995 (LAR 95-03)

Brief description of amendments: The amendments would allow an emergency diesel generator (EDG) hot restart test within 5 minutes of a 2-hour run at the continuous rating instead of an EDG loss of offsite power load sequencing test within 5 minutes of the 24-hour endurance run.

Date of issuance: June 26, 1995

Effective date: June 26, 1995

Amendment Nos.: Unit 1 - Amendment No. 105; Unit 2 - Amendment No. 104

Facility Operating License Nos. DPR-80 and DPR-82: The amendments revised the Technical Specifications.

Date of initial notice in **Federal Register:** May 23, 1995 (60 FR 27340) The Commission's related evaluation of the amendments is contained in a Safety Evaluation dated June 26, 1995.No significant hazards consideration comments received: No.

Local Public Document Room location: California Polytechnic State University, Robert E. Kennedy Library, Government Documents and Maps Department, San Luis Obispo, California 93407.

Pacific Gas and Electric Company, Docket Nos. 50-275 and 50-323, Diablo Canyon Nuclear Power Plant, Unit Nos. 1 and 2, San Luis Obispo County, California

Date of application for amendments: February 16, 1994, as supplemented by letter dated April 25, 1995 (Reference LAR 94-05)

Brief description of amendments: The amendment revises Technical Specifications 3/4.7.2, ''Steam Generator Pressure/Temperature Limitation,'' 3/4.7.7, ''Snubbers,'' 3/4.7.8, ''Sealed Source Contamination,'' 3/4.7.11, ''Area Temperature Monitoring,'' and 3/4.7.13, ''Flood Protection,'' in accordance with the Commission's final policy statement for relocation of current technical specifications to licensee controlled documents that do not satisfy any of the policy statement criteria.

Date of issuance: July 6, 1995

Effective date: July 6, 1995

Amendment Nos.: Unit 1 - Amendment No. 106; Unit 2 - Amendment No. 105

Facility Operating License Nos. NPF-10 and NPF-15: The amendments revised the Technical Specifications.

Date of initial notice in **Federal Register:** April 13, 1994 (59 FR 17603) The April 25, 1995, supplemental letter provided additional clarifying information and did not change the initial no significant hazards consideration determination. The Commission's related evaluation of the amendments is contained in a Safety Evaluation dated July 6, 1995.No significant hazards consideration comments received: No.

Local Public Document Room location: California Polytechnic State University, Robert E. Kennedy Library, Government Documents and Maps Department, San Luis Obispo, California 93407.

Power Authority of the State of New York, Docket No. 50-333, James A. FitzPatrick Nuclear Power Plant, Oswego County, New York

Date of application for amendment: February 22, 1995

Brief description of amendment: The amendment modifies operability and surveillance requirements for the reactor vessel overfill protection instrumentation that initiates feedwater pump turbine and main turbine trips on high reactor vessel water level. The NRC staff has determined that the proposed Technical Specification (TS) changes will have no adverse impact on plant safety and will enhance the current TSs by adding operability requirements for the reactor vessel overfill protection system. Therefore, the proposed TS changes are acceptable.

Date of issuance: June 19, 1995

Effective date: As of the date of issuance to be implemented within 30 days.

Amendment No.: 225

Facility Operating License No. DPR-59: Amendment revised the Technical Specifications.

Date of initial notice in **Federal Register:** May 10, 1995 (60 FR 24915) The Commission's related evaluation of the amendment is contained in a Safety Evaluation dated June 19, 1995.No significant hazards consideration comments received: No Local Public Document Room location: Reference and Documents Department, Penfield Library, State University of New York, Oswego, New York 13126.

Public Service Electric & Gas Company, Docket No. 50-354, Hope Creek Generating Station, Salem County, New Jersey

Date of application for amendment: July 28, 1994 and December 15, 1994

Brief description of amendment: This amendment makes changes to TS Section 3/4.8.1 ''AC SOURCES.'' The staff found it appropriate to combine these two applications into one amendment. The amendment removes the surveillance requirements, methodology and frequency for Emergency Diesel Generator (EDG) fuel oil from the TS and relocates them in a controlled plant procedure, VSH.SS-CA.ZZ-0013(Q) ''Procedures for Testing Diesel Fuel and ι2 Fuel Oil at Artificial Island for PSE&G Nuclear Operations.'' The changes also delete an unnecessary lab test for the fuel oil and extend the surveillance frequency from once per 92 days to once per 184 days. In addition and in accordance with 10 CFR 50.90, this amendment removes TS Surveillance Requirement 4.8.1.1.2.h.1 in order that PSE&G can utilize plant-controlled programs to govern diesel generator maintenance. To ensure procedural consistency and reduce the impact of this change on Hope Creek procedures, the remaining Surveillance Requirements of TS 4.8.1.1.2.h are not renumbered.

Date of issuance: June 29, 1995

Effective date: June 29, 1995

Amendment No.: 74

Facility Operating License No. NPF-57: This amendment revised the Technical Specifications.

Date of initial notice in **Federal Register:** August 31, 1994 (59 FR 45034) and April 26, 1995 (60 FR 20526) The Commission's related evaluation of the amendment is contained in a Safety Evaluation dated June 29, 1995.No significant hazards consideration comments received: No

Local Public Document Room location: Pennsville Public Library, 190 S. Broadway, Pennsville, New Jersey 08070.

Public Service Electric & Gas Company, Docket No. 50-272, Salem Nuclear Generating Station, Unit No. 1, Salem County, New Jersey Date of application for amendment: April 4, 1995

Brief description of amendment: The amendment allows a one-time interval extension for the Type A test required by 10 CFR Part 50, Appendix J. Instead of conducting the test during the twelfth refueling outage, it can now be conducted during the thirteenth refueling outage, but no later than June 1997.

Date of issuance: July 5, 1995

Effective date: July 5, 1995

Amendment No.: 171

Facility Operating License No. DPR-70: This amendment revised the Technical Specifications.

Date of initial notice in **Federal Register:** May 23, 1995 (60 FR 27341) The Commission's related evaluation of the amendment is contained in a Safety Evaluation dated July 5, 1995.No significant hazards consideration comments received: No

Local Public Document Room location: Salem Free Public Library, 112 West Broadway, Salem, New Jersey 08079.

Tennessee Valley Authority, Docket Nos. 50-327 and 50-328, Sequoyah Nuclear Plant, Units 1 and 2, Hamilton County, Tennessee

Date of application for amendments: April 6, 1995; supplemented May 26, 1995 (TS 94-19)

Brief description of amendments: The amendments revise action statements to eliminate starting of emergency diesel generators in order to verify their operability whenever one of the required electrical power sources is inoperable or a diesel is inoperable unless the diesel inoperability is due to a common cause failure.

Date of issuance: June 29, 1995

Effective date: June 29, 1995

Amendment Nos.: 205 and 195

Facility Operating License Nos. DPR-77 and DPR-79: Amendments revise the technical specifications.

Date of initial notice in **Federal Register:** April 26, 1995 (60 FR 20529) The Commission's related evaluation of the amendment is contained in a Safety Evaluation dated June 29, 1995.No significant hazards consideration comments received: None

Local Public Document Room location: Chattanooga-Hamilton County Library,1101 Broad Street, Chattanooga, Tennessee 37402.

The Cleveland Electric Illuminating Company, Centerior Service Company, Duquesne Light Company, Ohio Edison Company, Pennsylvania Power Company, Toledo Edison Company, Docket No. 50-440, Perry Nuclear Power Plant, Unit No. 1, Lake County, Ohio Date of application for amendment: September 27, 1993 and December 16, 1994

Brief description of amendment: The amendment revised the Technical Specification Section 6.8.1, ''Unit Staff Qualifications,'' to make it consistent with the current requirements of Part 55 of Title 10 of the Code of Federal Regulations.

Date of issuance: June 27, 1995

Effective date: June 27, 1995

Amendment No.: 70

Facility Operating License No. NPF-58: This amendment revised the Technical Specifications.

Date of initial notice in **Federal Register:** December 8, 1993 (58 FR 64604) and February 1, 1995 (60 FR 6310). The Commission's related evaluation of the amendment is contained in an Environmental Assessment dated February 28, 1995, and a Safety Evaluation, dated June 27, 1995.No significant hazards consideration comments received: No

Local Public Document Room location: Perry Public Library, 3753 Main Street, Perry, Ohio 44081.

Union Electric Company, Docket No. 50-483, Callaway Plant, Unit 1, Callaway County, Missouri

Date of application for amendment: July 16, 1993

Brief description of amendment: The amendment revises the Technical Specifications (TS) 3/4.8.1.1 and 3/

4.8.1.2. The changes address the minimum required storage volumes of the Emergency Fuel Oil storage and day tanks.

Date of issuance: July 6, 1995Effective date: July 6, 1995

Amendment No.: 100

Facility Operating License No. NPF-30: Amendment revises the Technical Specifications.

Date of initial notice in **Federal Register:** April 13, 1994 (59 FR 17607) The Commission's related evaluation of the amendment is contained in a Safety Evaluation dated July 6, 1995. No significant hazards consideration comments received: No.

Local Public Document Room location: Callaway County Public Library, 710 Court Street, Fulton, Missouri 65251.

Virginia Electric and Power Company, Docket Nos. 50-280 and 50-281, Surry Power Station, Unit Nos. 1 and 2, Surry County, Virginia.

Date of application for amendments: January 24, 1995

Brief description of amendments: The amendments change the ''as-found'' test criterion for the pressurizer safety valves from plus or minus 1% to plus or minus 3%

Date of issuance: June 29, 1995

Effective date: June 29, 1995

Amendment Nos.: 200 and 200

Facility Operating License Nos. DPR-32 and DPR-37: Amendments revised the Technical Specifications.

Date of initial notice in **Federal Register:** April 12, 1995 (60 FR 18631) The Commission's related evaluation of the amendment is contained in a Safety Evaluation dated June 29, 1995.No significant hazards consideration comments received: No

Local Public Document Room location: Swem Library, College of William and Mary, Williamsburg, Virginia 23185.

Washington Public Power Supply System, Docket No. 50-397, Nuclear Project No. 2, Benton County, Washington

Date of application for amendment: July 12, 1994

Brief description of amendment: The amendment modifies the technical specifications (TS) to remove instrument response time limit tables for the reactor protection system, isolation actuation system, and emergency core cooling system from the TS. The affected instrument response time limit tables will be located in the Final Safety Analysis Report (FSAR).

Date of issuance: June 26, 1995

Effective date: June 26, 1995, to be implemented within 30 days of issuance.

Amendment No.: 139

Facility Operating License No. NPF-21: The amendment revised the Technical Specifications.

Date of initial notice in **Federal Register:** August 31, 1994 (59 FR 45036). The Commission's related evaluation of the amendment is contained in a Safety Evaluation dated June 26, 1995.No significant hazards consideration comments received: No.

Local Public Document Room location: Richland Public Library, 955 Northgate Street, Richland, Washington 99352.

Wisconsin Electric Power Company, Docket Nos. 50-266 and 50-301, Point Beach Nuclear Plant, Unit Nos. 1 and 2, Town of Two Creeks, Manitowoc County, Wisconsin

Date of application for amendments: January 24, 1995, as supplemented by letters dated February 24, April 25, May 24, and June 1, 1995

Brief description of amendments: These amendments revise Point Beach Nuclear Plant Technical Specification (TS) Section 15.6.5, ''Review and Audit,'' and TS Section 15.7.8, ''Administrative Controls.'' The quality assurance audit frequencies and the section on emergency plan reviews are relocated to other documents, and the period for radioactive effluent reporting is increased to annual. In addition, the references to ''Semiannual Monitoring Report'' are changed to ''Annual Monitoring Report'' throughout TS Sections 15.7 and 16.5. Administrative changes are also included.

Date of issuance: July 5, 1995

Effective date: July 5, 1995

Amendment Nos.: Unit 1 - 162: Unit 2 - 166

Facility Operating License Nos. DPR-24 and DPR-27. Amendments revised the Technical Specifications.

Date of initial notice in **Federal Register:** March 1, 1995 (60 FR 11142). The February 24, April 25, May 24, and June 1, 1995, submittals provided supplemental information that did not change the initial proposed no significant hazards consideration determination.The Commission's related evaluation of the amendments is contained in a Safety Evaluation dated July 5, 1995.No significant hazards consideration comments received: No.

Local Public Document Room location: Joseph P. Mann Library, 1516 Sixteenth Street, Two Rivers, Wisconsin 54241.

Notice Of Issuance Of Amendment To Facility Operating License And Final No Significant Hazards Consideration Determination

During the period since publication of the last biweekly notice, individual notices of issuance of amendments have been issued for the facilities as listed below. These notices were previously published as separate individual notices. They are repeated here because this biweekly notice lists all amendments that have been issued for which the Commission has made a final determination that an amendment involves no significant hazards consideration.

In this case, a prior Notice of Consideration of Issuance of Amendment, Proposed No Significant Hazards Consideration Determination, and Opportunity for a Hearing was issued, a hearing was requested, and the amendment was issued before any hearing because the Commission made a final determination that the amendment involves no significant hazards consideration.

Details are contained in the individual notice as cited.

Commonwealth Edison Company, Docket No. 50-295, Zion Nuclear Power Station Unit 1, Lake County, Illinois

Date of amendment request: May 17, 1995

Description of amendment request: The proposed amendment would revise the Technical Specifications (TS) to allow 154 steam generator tubes that potentially exceed the repair or plugging criteria to remain in service for the remainder of the current Unit 1 operating cycle.

Date of publication of individual notice in **Federal Register:** May 25, 1995 (60 FR 27798)

Expiration date of individual notice: June 26, 1995

Local Public Document Room location: Waukegan Public Library, 128 N. County Street, Waukegan, Illinois 60085.

Commonwealth Edison Company, Docket Nos. 50-295 and 50-304, Zion Nuclear Power Station Units 1 and 2, Lake County, Illinois

Date of amendment request: June 14, 1995

Description of amendment request: The proposed amendments would revise the Technical Specifications (TS) to allow the hot restart sequence loading test of the emergency diesel generators to be performed independent of the 24 hour endurance test.

Date of publication of individual notice in **Federal Register:** June 30, 1995 (60 FR 34308)

Expiration date of individual notice: July 31, 1995

Local Public Document Room location: Waukegan Public Library, 128 N. County Street, Waukegan, Illinois 60085.

Dated at Rockville, Maryland, this 12th day of July 1995.

For the Nuclear Regulatory Commission

Jack W. Roe,

Director, Division of Reactor Projects - III/IV,Office of Nuclear Reactor Regulation

[Doc. 95-17565 Filed 7-18-95; 8:45 am]

BILLING CODE 7590-01-F

Availability of Draft Application Format and Content Guidance and Review Plan and Acceptance Criteria for Non-Power Reactors

The U.S. Nuclear Regulatory Commission (NRC) is in the process of developing for Non-Power Reactors (NPRs) a ''Format and Content for Applications for the Licensing of Non-Power Reactors'' (F&C) and a ''Standard Review Plan and Acceptance Criteria for Applications for the Licensing of Non-Power Reactors'' (SRP). The NRC has made available a draft of Chapter 16, ''Other License Considerations,'' of the F&C and SRP documents for comment. Other draft chapters will be made available for comment as they are completed.

Copies of these chapters have been placed in the NRC Public Document Room, the Gelman Building, 2120 L Street NW., Washington, DC 20555. Single copies of these documents may be requested in writing from Alexander Adams, Jr., Senior Project Manager, US Nuclear Regulatory Commission, MS: 0–11–B–20, Washington, DC 20555. Comments on this chapter should be sent by October 12, 1995 to the Director, Non-Power Reactors and Decommissioning Project Directorate at the above address.

Dated at Rockville, MD, this July 12, 1995.

For the Nuclear Regulatory Commission.

Seymour H. Weiss,

Director, Non-Power Reactors and Decommissioning Project Directorate, Division of Project Support, Office of Nuclear Reactor Regulation.

[FR Doc. 95–17721 Filed 7–18–95; 8:45 am]

BILLING CODE 7590–01–M

[Docket No. 50–400]

Carolina Power & Light Co.; Notice of Withdrawal of Application for Amendment to Facility Operating License

The U.S. Nuclear Regulatory Commission (the Commission) has granted the request of Carolina Power & Light Company (the licensee) to withdraw its August 20, 1993, application for proposed amendment to Facility Operating License No. NPF–63 for the Shearon Harris Nuclear Power Plant, Unit No. 1, located in New Hill, North Carolina 27562.

The proposed amendment would have revised the TS to allow the repair of degraded steam generator tubes by sleeving as an alternative to removing the tube from service by plugging. The Commission had previously issued a Notice of Consideration of Issuance of Amendment published in the **Federal Register** on September 15, 1993 (58 FR 48378). However, by letter dated July 5, 1995, the licensee withdrew the proposed change.

For further details with respect to this action, see the application for amendment dated August 20, 1993, and the licensee's letter dated July 5, 1995, which withdrew the application for license amendment. The above documents are available for public inspection at the Commission's Public Document Room, the Gelman Building, 2120 L Street NW., Washington, DC, and at the local public document room located at the Cameron Village Regional Library, 1930 Clark Avenue, Raleigh, North Carolina 27605.

Dated at Rockville, Maryland, this 12th day of July 1995.

For the Nuclear Regulatory Commission.

Ngoc B. Le,

Project Manager, Project Directorate II–1, Division of Reactor Projects—I/II, Office of Nucler Reactor Regulation.

[FR Doc. 95–17719 Filed 7–18–95; 8:45 am]

BILLING CODE 7590–01–M

[Docket Nos. 50–424 and 50–425]

Georgia Power Company, et al.; Vogtle Electric Generating Plant, Units 1 and 2; Exemption

I

Georgia Power Company, et al. (the licensee) is the holder of Facility Operating License Nos. NPF–68 and NPF–81 for the Vogtle Electric Generating Plant, Units 1 and 2. The licenses provide, among other things, that the licensee is subject to all rules, regulations, and orders of the Commission in effect now and hereafter.

The facility consists of two pressurized water reactors near Waynesboro in Burke Country, Georgia.

II

Title 10 of the Code of Federal Regulations (10 CFR) 73.55, ''Requirements for Physical Protection of Licensed Activities in Nuclear Power Reactors Against Radiological Sabotage,'' paragraph (a), in part, states that ''The licensee shall establish and maintain an onsite physical protection system and security organization which will have as its objective to provide high assurance that activities involving special nuclear material are not inimical to the common defense and security and do not constitute an unreasonable risk to the public health and safety.''

Section 73.55(d), ''Access Requirements,'' paragraph (1), specifies that ''The licensee shall control all points of personnel and vehicle access into a protected area.'' Section 73.55(d)(5) requires that ''A numbered picture badge identification system shall be used for all individuals who are authorized access to protected areas without escort.'' Section 73.55(d)(5) also states that an individual not employed by the licensee (i.e., contractors) may be authorized access to protected areas without escort provided the individual ''receives a picture badge upon entrance into the protected area which must be returned upon exist from the protected area * * *''

The licensee has proposed to implement an alternative unescorted access control system that would eliminate the need to issue and retrieve badges at each entrance/exit location and would allow all individuals with unescorted access to keep their badges when departing the site.

An exemption from 10 CFR 73.55(d)(5) is required to allow contractors who have unescorted access to take their badges offsite instead of returning them when exiting the site. By letter dated February 14, 1995, the licensee requested an exemption from the requirements of 10 CFR 73.55(d)(5) for this purpose.

III

Pursuant to 10 CFR 73.5, ''Specific exemptions,'' the Commission may, upon application of any interested person or upon its own initiative, grant such exemptions in this part as it determines are authorized by law and will not endanger life or property or the common defense and security, and are otherwise in the public interest. Pursuant to 10 CFR 73.55, the Commission may authorize a licensee to provide alternative measures for

protection against radiological sabotage provided the licensee demonstrates that the alternative measures have ''the same high assurance objective'' and meet ''the general performance requirements'' of the regulation, and ''the overall level of system performance provides protection against radiological sabotage equivalent'' to that which would be provided by the regulation.

Currently, unescorted access into the protected areas at the Vogtle site is controlled through the use of a photograph on a badge/keycard (hereafter, referred to as ''badge''). The security officers at each entrance station use the photograph on the badge to visually identify the individual requesting access. The licensee's employees and contractor personnel who have been granted unescorted access are issued badges upon entrance at each entrance/exit location and the badges are returned upon exit. The badges are stored and are retrievable at each entrance/exit location. In accordance with 10 CFR 73.55(d)(5), contractors are not allowed to take these badges offsite.

Under the proposed biometric system, each individual who is authorized unescorted entry into protected areas would have the physical characteristics of his/her hand (i.e., hand geometry) registered, along with his/her number, in the access control system. When a registered user enters his/her badge into the card reader and places his/her hand onto the measuring surface, the system detects that the hand is properly positioned, and records the image. The unique characteristics of the hand image are then compared with the previously stored template in the access control computer system corresponding to the badge to verify authorization for entry.

Individuals, including Vogtle plant employees and contractors, would be allowed to keep their badges when they depart the site and, thus, eliminate the need to issue, retrieve, and store badges at the entrance stations to the plant. Badges do not carry any information other than a unique identification number.

All other access processes, including search function capability, would remain the same. This system would not be used for persons requiring escorted access (i.be., visitors).

Based on the Sandia report, ''A performance Evaluation of Biometrics Identification Devices,'' SAND91–0276•UC–906, Unlimited Release, June 1991, that concluded hand geometry equipment possesses strong performance and high detection characteristics, and on its own experience with the current photo-identification system the licensee determined that the proposed hand geometry system would provide the same high level of assurance as the current system that access is only granted to authorized individuals. The biometric system has been in use for a number of years at several sensitive Department of Energy facilities and, recently, at nuclear power plants.

The licensee will implement a process for testing the proposed system to ensure continued overall level of performance equivalent to that specified in the regulation. When the changes are implemented, the respective Physical Security Plan will be revised to include implementation and testing of the hand geometry access control system and to allow Vogtle plant employees and contractors to take their badges offsite.

When implemented, the licensee will control all points of personnel access into a protected area under the observation of security personnel through the use of a badge and a hand geometry verification system. The numbered picture badge identification system will continue to be used for all individuals who are authorized unescorted access to protected areas. Badges will continue to be displayed by all individuals while inside the protected areas.

Since both the badge and hand geometry would be necessary for access into the protected areas, the proposed system would provide a positive verification process. The potential loss of a badge by an individual as a result of taking the badge offsite would not enable an unauthorized entry into protected areas.

IV

For the foregoing reasons, pursuant to 10 CFR 73.55, the NRC staff has determined that the proposed alternative measures for protection against radiological sabotage meet ''the same high assurance objective,'' and ''the general performance requirements'' of the regulation and that ''the overall level of system performance provides protection against radiological sabotage equivalent'' to that which would be provided by the regulation.

Accordingly, the Commission has determined that, pursuant to 10 CFR 73.5, this exemption is authorized by law and will not endanger life or property or common defense and security, and is otherwise in the public interest. Therefore, the Commission hereby grants the requested exemption from the requirements of 10 CFR 73.55(d)(5) to allow individuals not employed by the licensee (i.e., contractors) to take their photo identification badges offsite, provided that the proposed hand geometry biometrics system is in effect to control access into protected areas at the Vogtle Nuclear Plant.

Pursuant to 10 CFR 51.32, the Commission has determined that the granting of this exemption will not result in any significant adverse environmental impact (60 FR 35964).

For further details with respect to this action, see the request for exemption dated February 14, 1995, which is available for public inspection at the Commission's Public Document Room, 2120 L Street, NW., Washington, DC, and at the local public document room located at the Burke County Public Library, 412 Fourth Street, Waynesboro, Georgia.

This exemption is effective when modifications, procedures, and training to implement the hand geometry biometrics system have been completed and the corresponding revisions to the Physical Security Plan for the Vogtle plant have been submitted, and reviewed and approved by the staff.

Dated at Rockville, Maryland, this 12th day of July 1995.

For the Nuclear Regulatory Commission.

Steven A. Varga,

Director, Division of Reactor Projects—I/II, Office of Nuclear Reactor Regulation.

[FR Doc. 95–17720 Filed 7–18–95; 8:45 am]

BILLING CODE 7590–01–M

[Docket Nos. 50–206, 50–361, 50–362]

Southern California Edison Company; San Onofre Nuclear Generating Station, Unit Nos. 1, 2, and 3; Environmental Assessment and Finding of No Significant Impact

The U.S. Nuclear Regulatory Commission (the Commission) is considering issuance of an exemption from certain requirements of its regulations to Facility Operating License Nos. DPR 13, NPF–10, and NPF–15, issued to Southern California Edison (the licensee), for operation of the San Onofre Nuclear Generating Station, Units 1, 2, and 3, located in San Diego County, California.

Environmental Assessment

Identification of the Proposed Action

The proposed exemption would allow individuals not employed by the licensee (i.e., contractors) who have unescorted access to retain possession of their picture badges instead of returning them as they exit the protected area.

The proposed action is in accordance with the licensee's application dated

March 13, 1995, for exemption from certain requirements of 10 CFR 73.55, ''Requirements for physical protection of licensed activities in nuclear power plant reactors against radiological sabotage.''

The Need for the Proposed Action

Paragraph (1) of 10 CFR 73.55(a), the licensee is required to establish and maintain an onsite physical system and security organization.

Paragraph (1) of 10 CFR 73.55(d), ''Access Requirements,'' specifies in part that ''The licensee shall control all points of personnel and vehicle access into a protected area.'' It is specified in 10 CFR 73.55(d)(5), ''A numbered picture badge identification system shall be used for all individuals who are authorized access to protected areas without escort.'' It further indicates that an individual not employed by the licensee (e.g., contractors) may be authorized access to protected areas without an escort provided the individual, ''receives a picture badge upon entrance into the protected area which must be returned upon exit from the protected area.''

Currently, unescorted access for both employee and contractor personnel into the San Onofre Nuclear Generating Station is controlled through the use of picture badges. Positive identification of personnel who are authorized and request access into the protected area is established by security personnel making visual comparison of the individual requesting access and that individual's picture badge. The picture badges are issued, stored, and retrieved at the entrance/exit locations to the protected area. These picture badges are not taken offsite. This current practice is in accordance with the applicable requirements of 10 CFR Part 73 discussed above.

The licensee proposes to revise its security plan to implement an alternative unescorted access control system which would eliminate the need for site security personnel to issue and retrieve picture badges at the entrance/exit locations to the protected area. The proposal would enable the licensee to revise the SONGS security plan to allow all individuals, including contractors, who have unescorted access to the San Onofre Nuclear Generating Station to retrieve their own badges before entering the protected area and return their badges when exiting the protected area for retrieval for their next entrance. Thus, an exemption is required from 10 CFR 73.55(d)(5) to allow individuals, including contractors, who have unescorted access to keep their picture badges in their possession when departing the San Onofre Nuclear Generating Station.

Environmental Impacts of the Proposed Action

The Commission has completed its evaluation of the proposed action. In addition to their picture badges, all individuals with authorized unescorted access will have the physical characteristics of their hand (hand geometry) registered with their picture badge number in a computerized access control system. Therefore, all authorized individuals must not only have their picture badges to gain access into the protected area, but must also have their hand geometry confirmed.

All other access processes, including search function capability and access revocation, will remain the same. A security officer responsible for access control will continue to be positioned within a hardened cubicle. The proposed system is only for individuals with authorized unescorted access and will not be used for individuals requiring escorts.

The underlying purpose for requiring that individuals not employed by the licensee must receive and return their picture badges at the entrance/exit is to provide reasonable assurance that the access badges could not be compromised or stolen with a resulting risk that an unauthorized individual could potentially enter the protected area. Although the proposed exemption will allow individuals to take their picture badges offsite, the proposed measures require not only that the picture badge be provided for access to the protected area, but also that verification of the hand geometry registered with the badge be performed as discussed above. Thus, the proposed system provides an identity verification process that is equivalent to the existing process.

Accordingly, the Commission concludes that the exemption to allow individuals to take their picture badges offsite will not result in an increase in the risk that an unauthorized individual could potentially enter the protected area. The change will not increase the probability or consequences of accidents, no changes are being made in the types of any effluents that may be released offsite, and there is no significant increase in the allowable individual or cumulative occupational radiation exposure. Accordingly, the Commission concludes that there are no significant radiological environmental impacts associated with the proposed action.

With regard to potential nonradiological impacts, the proposed actions does involve features located entirely within the restricted area as defined in 10 CFR Part 20. It does not affect nonradiological plant effluents and has no other environmental impact. Accordingly, the Commission concludes that there are no significant nonradiological environmental impacts associated with the proposed action.

Alternatives to the Proposed Action

Since the Commission has concluded there is no measurable environmental impact associated with the proposed action, any alternatives with equal or greater environmental impact need not be evaluated. The principal alternative to the action would be to deny the request. Such action would not significantly enhance the protection of the environment in that the proposed action will result in a process that is equivalent to the existing identification verification process.

Alternative Use of Resources

This action does not involve the use of any resources not previously considered in the Environmental Assessment related to the conversion of the Provisional Operating License to a Full Term Operating License issued to Southern California Edison Company for the San Onofre Nuclear Generating Station, Unit 1, on September 26, 1991, or the Final Environmental Report Related to the Operation of San Onofre Nuclear Generating Station, units 2 and 3 (April 1981).

Agencies and Persons Consulted

In accordance with its stated policy, on June 19, 1995, the staff consulted with the California State official, Mr. Stephen Hsu of the California Department of health Services, regarding the environmental impact of the proposed action. The State official had no comments.

Finding of No Significant Impact

Based upon the environmental assessment, the Commission concludes that the proposed action will not have a significant effect on the quality of the human environment. Accordingly, the Commission has determined not to prepare an environmental impact statement for the proposed action.

For further details with respect to the proposed action, see the licensee's letter dated March 13, 1995, which is available for public inspection at the Commission's Public Document Room, The Gelman Building, 2120 L Street, NW, Washington, DC, and at the local public document room located at the Main Library, University of California,

Post Office Box 19557, Irvine, California 92713.

Dated at Rockville, Maryland, this 13th day of July 1995.

For the Nuclear Regulatory Commission.

Seymour H. Weiss,

Director, Non-Power Reactor's and Decommissioning Project Directorate, Division of Project Support, Office of Nuclear Reactor Regulation.

[FR Doc. 95–17722 Filed 7–18–95; 8:45 am]

BILLING CODE 7590–01–M

PANAMA CANAL COMMISSION

Agency Collection of Information Submitted to the Office of Management and Budget for Clearance

AGENCY: Panama Canal Commission.

ACTION: Notice.

SUMMARY: In accordance with the requirements of the Paperwork Reduction Act of 1980 (Pub. L. 96–511), as amended, the Panama Canal Commission hereby gives notice that it has submitted to the Office of Management and Budget a Standard Form 83, Request for OMB Review, for a currently approved collection of information designated ''Procurement-Related Forms and Contract Clauses,'' OMB No. 3207–0007.

ADDRESSES: Comments may be sent to Edward H. Clarke, Information Desk Officer, Commerce and Lands Branch, Office of Information and Regulatory Affairs, Room 10202, New Executive Office Building, Office of Management and Budget, Washington, DC 20503.

FOR FURTHER INFORMATION CONTACT: For a complete copy of the collection of information or related information, contact Barbara Fuller, Office of the Secretary, Panama Canal Commission, telephone (202) 634–6441.

SUPPLEMENTARY INFORMATION:

Title: Procurement-Related Forms and Contract Clauses.

Form and Clause Numbers: Various.

Type of Request: Revision of a currently approved collection.

Respondents: Businesses or other for-profit.

Estimated Total Burden Hours: 20,899.

Estimated Hours Per Response: .287.

Frequency of Response: On Occasion.

Estimated Number of Respondents: 72,728.

Needs and Uses: The collection of information is necessary to procure supplies, services, and construction required by the Panama Canal Commission for the operation and maintenance of the Panama Canal. The information requested is prescribed by various sections of the Panama Canal Commission Acquisition Regulation (PAR), codified as 48 CFR Chapter 35, which is issued by the Administrator of the Commission pursuant to the authority of section 205(c) of the Federal Property and Administrative Services Act of 1949 (40 U.S.C. 486(c), as amended, for the purpose of implementing and supplementing the Federal Acquisition Regulation (FAR) (48 CFR Chapter 1). Agency implementation and supplementation of the FAR is authorized by section 1.301 of the FAR. Together, the FAR and PAR govern the contracting process or otherwise control the relationship between the Commission and its contractors or prospective contractors.

Dated: July 14, 1995.

James E. Ferrara,

Director, Office of Executive Administration and Transition Coordination, Senior Official for Information Resources Management.

[FR Doc. 95–17750 Filed 7–18–95; 8:45 am]

BILLING CODE 3640–04–P

SECURITIES AND EXCHANGE COMMISSION

[Release Nos. 33–7195; 34–35969; File No. 265–20]

Advisory Committee on the Capital Formation and Regulatory Processes

AGENCY: Securities and Exchange Commission.

ACTION: Change in meeting time.

SUMMARY: This is to give notice that the time for the meeting of the Securities and Exchange Commission Advisory Committee on the Capital Formation and Regulatory Processes scheduled for July 26, 1995 in room 1C30 at the Commission's main offices, 450 Fifth Street N.W., Washington, DC, has been changed to 1 p.m. The meeting will be open to the public, and the public is invited to submit written comments to the Committee.

FOR FURTHER INFORMATION CONTACT:

David A. Sirignano, Committee Staff Director, at 202—942–2870; Securities and Exchange Commission, 450 Fifth Street NW., Washington, DC 20549.

Dated: July 13, 1995.

Jonathan G. Katz,

Secretary.

[FR Doc. 95–17666 Filed 7–18–95; 8:45 am]

BILLING CODE 8010–01–M

[Release No. 34–35963; File No. SR–Amex–95–24]

Self-Regulatory Organizations; Filing of Proposed Rule Change by the American Stock Exchange, Inc. Relating to the Execution of Odd-Lot Market Orders

July 12, 1995.

Pursuant to section 19(b)(1) of the Securities Exchange Act of 1934 (''Act''),[1] notice is hereby given that on June 16, 1995, the American Stock Exchange, Inc. (''Amex'' or ''Exchange'') filed with the Securities and Exchange Commission (''Commission'') the proposed rule change as described in Items I, II, and III below, which Items have been prepared by the self-regulatory organization. The Commission is publishing this notice to solicit comments on the proposed rule change from interested persons.

I. Self-Regulatory Organization's Statement of the Terms of Substance of the Proposed Rule Change

The Exchange proposes to amend Exchange Rule 205 to provide for the execution of odd-lot market orders[2] at the Intermarket Trading System (''ITS'') best bid or offer, subject to certain conditions set forth in proposed Rule 205, Commentary .04. The text of the proposed rule change is available at the Commission and the Exchange.

II. Self-Regulatory Organization's Statement of the Purpose of, and Statutory Basis for, the Proposed Rule Change

In its filing with the Commission, the self-regulatory organization included statements concerning the purpose of and basis for the proposed rule change and discussed any comments it received on the proposed rule change. The text of these statements may be examined at the places specified in Item IV below. The self-regulatory organization has prepared summaries, set forth in sections A, B, and C below, of the most significant aspects of such statements.

A. Self-Regulatory Organization's Statement of the Purpose of, and Statutory Basis for, the Proposed Rule Change

1. Purpose

The Commission has approved, on a pilot basis extending to February 8, 1996, amendments to Exchange Rule 205 to require execution of odd-lot

[1] 15 U.S.C. 78s(b)(1).

[2] An odd-lot market order is an order of less than a unit of trading to buy, sell, or sell short, that carries no further qualifying notations. The normal trading unit, or round-lot, is 100 shares.

market orders at the prevailing Amex quote with no odd-lot differential.[3] Under the pilot procedures that were initially approved by the Commission in 1989,[4] market orders with no qualifying notations are executed at the Amex quotation at the time the order is represented in the market either by being received at the trading post or through the Exchange's Post Execution Reporting system (''PER'').[5] Enhancements to the PER system have been implemented to provide for the automatic execution of odd-lot market orders entered through PER. For the purposes of the pilot program, limit orders that are immediately executable based on the Amex quote at the time the order is received at the trading post or through PER are executed in the same manner as market orders.

In approving extensions to the Exchange's odd-lot pilot program, the Commission has expressed interest in the feasibility of the Exchange utilizing the ITS best bid or offer, rather than the Amex bid or offer, for the purposes of the Exchange's odd-lot pricing system.[6] In its most recent request for an extension of the pilot program, the Exchange stated that it decided to proceed with systems modifications, which it anticipates will be completed within a twelve month period, to provide for the execution of odd-lot market orders at the ITS best bid or offer.[7]

The Exchange proposes to amend Rule 205 to accommodate the prospective modifications to the Exchange's odd-lot pricing system. Specifically, amended Rule 205 would provide that odd-lot market orders to buy or sell would be filled at the ''adjusted ITS offer'' or ''adjusted ITS bid,'' respectively, which are defined in proposed Rule 205, Commentary .04, as the lowest offer and highest bid disseminated by the Amex or by another ITS participant market. Where quotation information is not available (*e.g.*, when quotation collection or dissemination facilities are inoperable) odd-lot market orders would be executed at the prevailing Amex bid or offer or at a price deemed appropriate under prevailing market conditions. These procedures also will apply to odd-lot executable limit orders.

In determining the adjusted ITS bid and offer, the bid and offer in another ITS market center will be considered only if: (1) The stock is included in ITS in that market center, (2) the size of the quotation is greater that 100 shares, (3) the bid or offer is no more than one-quarter dollar away from the bid or offer, respectively, disseminated by the Exchange, (4) the quotation conforms to the requirements of Rule 127 (''Minimum Fractional Changes''), (5) the quotation does not result in a locked market, as the term is defined in Rule 236, (6) the market center is not experiencing operational or system problems with respect to the dissemination of quotation information, and (7) the bid or offer is ''firm,'' that is, members of the market center disseminating the bid or offer are not relieved of their obligations with respect to such bid or offer under paragraph (c)(2) of Rule 11Ac1–1 pursuant to the ''unusual market'' exception of paragraph (b)(3) of Rule 11Ac1–1.

The Exchange will implement the proposed rule changes upon completion of necessary systems enhancements by the Exchange and the Securities Information Automation Corporation. The Exchange will notify the Commission, as well as Exchange members and member organizations, upon implementation of the amended rules.

2. Statutory Basis

The proposed rule change is consistent with section 6(b)[8] of the Act in general and furthers the objectives of section 6(b)(5)[9] in particular in that it facilitates the economically efficient execution of odd-lot transactions and is intended to result in improved execution of customer orders.

B. Self-Regulatory Organization's Statement on Burden on Competition

The Exchange believes the proposed rule change will impose no burden on competition.

C. Self-Regulatory Organization's Statement on Comments on the Proposed Rule Change Received From Members, Participants, or Others

Written comments were neither solicited nor received.

III. Date of Effectiveness of the Proposed Rule Change and Timing for Commission Action

Within 35 days of the publication of this notice in the **Federal Register** or within such other period (i) as the Commission may designate up to 90 days of such date if it finds such longer period to be appropriate and publishes its reasons for so finding or (ii) as to which the self-regulatory organization consents, the Commission will:

(A) By order approve the proposed rule change, or

(B) Institute proceedings to determine whether the proposed rule change should be disapproved.

IV. Solicitation of Comments

Interested persons are invited to submit written data, views, and arguments concerning the foregoing. Persons making written submissions should file six copies thereof with the Secretary, Securities and Exchange Commission, 450 Fifth Street, NW., Washington, DC 20549. Copies of the submission, all subsequent amendments, all written statements with respect to the proposed rule change that are filed with the Commission, and all written communications relating to the proposed rule change between the Commission and any person, other than those that may be withheld from the public in accordance with the provisions of 5 U.S.C. 552, will be available for inspection and copying at the Commission's Public Reference Section, 450 Fifth Street, NW., Washington, DC 20549. Copies of such filing also will be available for inspection and copying at the principal office of the American Stock Exchange. All submissions should refer to File No. SR-Amex-95-24 and should be submitted by August 9, 1995.

For the Commission, by the Division of Market Regulation, pursuant to delegated authority.[10]

Margaret H. McFarland,

Deputy Secretary.

[FR Doc. 95–17729 Filed 7–18–95; 8:45 am]

BILLING CODE 8010–01–M

[3] Securities Exchange Act Release No. 35344 (Feb. 8, 1995), 60 FR 8430.

[4] Prior to the 1989 pilot program, odd-lot market orders were routed to a specialist and held in accumulation in the system or by the specialist until a round-lot execution in that security took place on the Exchange. Subsequent to the round-lot execution, the odd-lot order received the same price as the electing round-lot transaction, plus or minus an odd-lot dealer differential.

[5] Securities Exchange Act Release No. 26445 (Jan. 10, 1989), 54 FR 2248. The PER system provides member firms with the means to electronically transmit equity orders, up to volume limits specified by the Exchange, directly to the specialist's post on the trading floor of the Exchange. Securities Exchange Act Release No. 34869 (Oct. 20, 1994), 59 FR 54016.

[6] *See* Securities Exchange Act Release No. 35344 (Feb. 8, 1995), 60 FR 8430 (raising concern over the fact that customers may not always receive the best available price under the current pilot program).

[7] *Id.*

[8] 15 U.S.C. 78f(b).

[9] 15 U.S.C. 78f(b)(5).

[10] 17 CFR 200.30–3(a)(12).

[Release No. 34–35960; File No. SR–BSE–95–11]

Self-Regulatory Organizations; Notice of Filing and Immediate Effectiveness of Proposed Rule Change by the Boston Stock Exchange, Inc. Pertaining to Its Transaction Fee and Specialist Trade Processing Fee Schedules

July 12, 1995.

Pursuant to Section 19(b)(1) of the Securities Exchange Act of 1934 (''Act''), 15 U.S.C. 78s(b)(1), notice is hereby given that on June 1, 1995, the Boston Stock Exchange, Inc. (''BSE'' or ''Exchange'') filed with the Securities and Exchange Commission (''Commission'') the proposed rule change, and amended such proposed rule change on July 7, 1995,[1] as described in Items I, II, and III below, which Items have been prepared by the self-regulatory organization. The Commission is publishing this notice to solicit comments on the proposed rule change from interested persons.

I. Self-Regulatory Organization's Statement of the Terms of Substance of the Proposed Rule Change

The Exchange proposes to amend its fee schedules pertaining to transaction fees and specialist trade processing fees. The text of the proposed rule change is as follows [new text is italicized; deleted text is bracketed]:

TRANSACTION FEES

* * * * * * * * *

(2) Trade Recording and Comparison Charges

• BSE *single-sided* executions up to and including [2]5,000 shares	No charge.
• *BSE cross trade executions up to and including 2,000 shares*	*No charge.*
• All other executions	
First 2,500 trades per month	$.29 per 100 shares.
Next 2,500 trades per month	.25 per 100 shares.
Next 2,500 trades per month	.15 per 100 shares.
Over 7,500 trades per month	.05 per 100 shares.
Maximum charge per side ([non-cross] *single-sided*)	50.00.
Maximum charge per side (cross]	100.00.

(All trades accumulate for volume discounts)

* * * * * * * * *

(3) Value Charges

• BSE *single-sided* executions up to and including [2]5,000 shares	$.20 per 100 shares.
• *BSE cross trade executions up to and including 2,000 shares*	*.20 per 100 shares.*
• All other executions (including ITS trades)	
First $10 million per month	.16 per $1,000 contract value.
Next $40 million per month	.13 per $1,000 contract value.
Next $50 million per month	.10 per $1,000 contract value.
Next $100 million per month	.08 per $1,000 contract value.
Next $300 million per month	.05 per $1,000 contract value.
$500.1+ million per month	.01 per $1,000 contract value.
Maximum charge per side ([non-cross] *single-sided*)	100.00.
Maximum charge per side (cross)	75.00.

(Contract value on these trades accumulate for volume discounts)

* * * * * * * * *

FLOOR OPERATION FEES

* * * * * * * * *

(3) Specialist Trade Processing

Pre-Opening Trades	No Charge.
Trades in CTA Securities ranked 1,001 and above	No Charge.
Market Orders	
• Self-directed	No Charge.
• All other orders from 100–2,500 shares inclusive in top 1,000 CTA ranked stocks	.50 per trade.
Round[-] lot/Odd[-] lot Trades	.75 per *order* [trade].
Trading Accounts Trades	*1.50 per order* [5.00 per trade].
CSI Trades (pilot)	
• *Maximum Total Round lot/Odd lot Charges*	
Competing Specialist	*250.00 per issue.*
Primary Specialist	*250.00 per issue (if Competing Specialist reaches maximum).*
• *Credit*	
Primary Specialist	*.50 per trade (based on Competing Specialist trade volume).*

(Total of the assessed fees for round lot/odd lot trades and trade credits will not be less than zero on a per issue basis)

[1] The amendment made a number of clarifying changes to the original filing. *See* letter from Karen A. Aluise, Assistant Vice President, Boston Stock Exchange, to Glen Barrentine, Senior Counsel, Division of Market Regulation, SEC (July 7, 1995).

II. Self-Regulatory Organization's Statement of the Purpose of, and Statutory Basis for, the Proposed Rule Change

In its filing with the Commission, the self-regulatory organization included statements concerning the purpose of and basis for the proposed rule change and discussed any comments it received on the proposed rule change. The text of these statements may be examined at the places specified in Item IV below. The self-regulatory organization has prepared summaries, set forth in Sections A, B, and C below, of the most significant aspects of such statements.

A. Self-Regulatory Organization's Statement of the Purpose of, and Statutory Basis for, the Proposed Rule Change

1. Purpose

The purpose of the proposed rule change is to amend several of the Exchange's fee schedules in order to capitalize on the competitive niches it currently enjoys and to improve the Exchange's competitive position in the overall marketplace. (1) The existing Value Charge and Trade Recording rates on single-sided BSE executions from 2,001 to 5,000 shares will be replaced with a $.20 per 100 shares Value Charge rate. No Trade Recording fees will be charged on these trades. These new rates are consistent with the fee structure currently in place for BSE executions up to 2,000 shares. These changes will reduce members' costs of executing mid-sized trades on the BSE. (2) Specialist Trading Account fees will be reduced from $5.00 per trade to $1.50 per order. (3) Specialist Trade Processing (round lot/odd lot/trading account) fees will be levied on a per order rather than a per trade basis. (4) Maximum total Specialist Trade Processing fees for round lot/odd lot trades will be capped at $250.00 per month per issue for both the competing and primary specialists in Competing Specialist Initiative (''CSI'') issues. If, however, the competing specialist does not generate $250.00 per month in round lot/odd lot fees in his or her competing issue, the primary specialist will not be eligible for the cap and, therefore, will be charged regular total trade processing (round lot/odd lot) fees. In addition, each primary specialist will receive a $.50 per trade credit based on the total trading volume of the competing specialist. The total of the assessed fees for round lot/odd lot trades and trade credits in competitive issues will not be less than zero on a per issue basis. Due to the temporary nature of the CSI pilot program, the Exchange proposes that this fee apply concurrently with the CSI pilot program, which is scheduled to expire on October 2, 1995.

2. Statutory Basis

The proposed rule change is consistent with Section 6(b)(4) of the Securities Exchange Act of 1934 because it provides for the equitable allocation of reasonable dues, fees, and other charges among its members and issuers and other persons using its facilities.

B. Self-Regulatory Organization's Statement on Burden on Competition

The Exchange believes the fee change will impose no burden on competition.

C. Self-Regulatory Organization's Statement on Comments on the Proposed Rule Change Received From Members, Participants, or Others

Comments were neither solicited nor received with respect to the fee change.

III. Date of Effectiveness of the Proposed Rule Change and Timing for Commission Action

The foregoing rule change establishes or changes a due, fee, or other charge imposed by the Exchange and, therefore, has become effective pursuant to Section 19(b)(3)(A) of the Act and subparagraph (e) of Rule 19b–4 thereunder. At any time within 60 days of the filing of such proposed rule change, the Commission may summarily abrogate such rule change if it appears to the Commission that such action is necessary or appropriate in the public interest, for the protection of investors, or otherwise in furtherance of the purposes of the Act.[2]

IV. Solicitation of Comments

Interested persons are invited to submit written data, views, and arguments concerning the foregoing. Persons making written submissions should file six copies thereof with the Secretary, Securities and Exchange Commission, 450 Fifth Street, NW., Washington, DC 20549. Copies of the submission, all subsequent amendments, all written statements with respect to the proposed rule change that are filed with the Commission, and all written communications relating to the proposed rule change between the Commission and any person, other than those that may be withheld from the public in accordance with the provisions of 5 U.S.C. 552, will be available for inspection and copying at the Commission's Public Reference Section, 450 Fifth Street, NW., Washington, DC 20549. Copies of such filing will also be available for inspection and copying at the principal office of the Boston Stock Exchange. All submissions should refer to File No. SR–BSE–95–11 and should be submitted by August 9, 1995.

For the Commission, by the Division of Market Regulation, pursuant to delegated authority.

Margaret H. McFarland,

Deputy Secretary.

[FR Doc. 95–17667 Filed 7–18–95; 8:45 am]

BILLING CODE 8010–01–M

[2] For the purposes of the foregoing, the Commission considers this proposed rule change to have been filed on July 7, 1995, the date that Amendment No. 1 was made.

[Release No. 34–35962; File No. SR–CHX–95–11]

Self-Regulatory Organizations; Chicago Stock Exchange, Incorporated; Order Granting Approval to Proposed Rule Change Relating to the Automatic Execution of Limit Orders

July 12, 1995.

I. Introduction

On March 31, 1995, the Chicago Stock Exchange, Incorporated (''CHX'' or ''Exchange'') submitted to the Securities and Exchange Commission (''SEC'' or ''Commission''), pursuant to section 19(b)(1) of the Securities Exchange Act of 1934 (''Act'')[1] and Rule 19b–4 thereunder,[2] a proposed rule change to establish a one-year pilot program[3] for the automatic execution of non-marketable limit orders.[4] The proposed rule change was published for comment in Securities Exchange Act Release No. 35722 (May 16, 1995), 60 FR 27358 (May 23, 1995). No comments were received on the proposal.

II. Proposal

The Exchange proposes to re-implement for a one-year pilot period a system enhancement that would facilitate the automatic execution of non-marketable limit orders in a specialist book. In 1993, the Commission first approved this system enhancement as a one-year pilot

[1] 15 U.S.C. 78s(b)(1) (1988).

[2] 17 CFR 240.19b–4 (1994).

[3] *See* letter from Craig Long, Foley & Lardner, to Glen Barrentine, Senior Counsel, Division of Market Regulation, SEC, dated May 4, 1995 (requesting that the rule filing be approved on a one-year pilot basis).

[4] A limit order is an order to buy or sell a stated amount of a security at a specified price or at a better price.

program.[5] The original one-year pilot lapsed in April 1994 without the Exchange filing for an extension or permanent approval.

The proposed system enhancement (''Auto-Ex'') is a feature of the Exchange's automated execution system (''MAX'') that CHX specialists may voluntarily choose to activate to automatically execute non-marketable limit orders on a specialist's book. Auto-Ex will operate by comparing the size of the CHX-entered limit order against the amount of stock ahead of that order in the primary market when the issue is trading in the primary market at the limit price.[6] The Auto-Ex system will begin comparing CHX-entered limit orders when the limit price equals the bid or offer quoted in the primary market (as the case may be) for the first time.[7] Thereafter, the Auto-Ex system will keep track of all prints in the primary market and will automatically execute the limit order once sufficient size prints in the primary market.[8] The Auto-Ex feature will not permit a limit order to be filled out of sequence; the Auto-Ex will execute additional limit orders at the same price by comparing those orders with shares ahead in the primary market and on CHX.

The Auto-Ex feature will execute limit orders in accordance with existing CHX rules.[9] All dually traded issues are eligible for inclusion in Auto-Ex, but specialists will be permitted to choose the securities for Auto-Ex on an issue by issue basis. Once Auto-Ex is activated for a certain security, the feature must remain activated for a minimum of five trading days and can be deactivated only on a certain day each month, which is determined from time to time by the Exchange. Generally, the Exchange believes that specialists will choose to use Auto-Ex for issues that, based on experience, have demonstrated reliable and accurate quotes in the primary market.[10] Limit orders not subject to Auto-Ex will be ''flagged'' with a prompt to alert the specialist that a fill may be due. The proposed Auto-Ex feature will apply only to nonmarketable limit orders [11] and not to marketable limit orders or to market orders.[12]

The Exchange states that the purpose of the proposed rule change is to further automate the CHX's trading floor functions and to improve the CHX's performance in filling limit orders. By providing for automatic execution of limit orders in accordance with existing Exchange rules, the Exchange states that it is eliminating the need for the manual operation required of specialists in determining when and to what extent limit orders are due fills based on primary market prints. The Exchange notes that the manual effort expended by specialists in filling limit orders that are entitled to primary market protection is often time-consuming and can result in errors, particularly when there is heavy trading volume. The Exchange believes that the present proposal will, therefore, directly benefit customers because it will result in more timely fills while eliminating errors resulting from manual execution.

The Exchange also states that the Auto-Ex feature will not change or amend any CHX trading rules, nor will it cause or allow limit orders to be filled under different parameters than under existing rules. Auto-Ex will only automate the manner in which limit orders are filled. The Exchanged states that it will continue to monitor specialist execution of limit orders through the Market Regulation/Surveillance Department. In addition, CHX specialists will continue to be responsible for their books to the same degree as they are now under the manual execution system for limit orders.

III. Discussion and Conclusion

The Commission finds that the proposed rule change is consistent with the requirements of the Act and the rules and regulations thereunder applicable to a national securities exchange, and, in particular, with the requirements of section 6(b) of the Act.[13] Specifically, the Commission believes the proposal is consistent with the section 6(b)(5) requirements that the rules of an exchange be designed to promote just and equitable principles of trade, to prevent fraudulent and manipulative acts, and, in general, to protect investors and the public interest. The Commission believes that the proposed rule change to provide for the automatic execution of non-marketable limit orders should result in prompt execution of such orders on the Exchange and reduce errors caused by manual execution of limit orders that are entitled to primary market protection, especially during periods of heavy trading volume.

As discussed above, the CHX proposal will allow specialists to choose which issues will be included in Auto-Ex. Although the Exchange has limited the specialist's discretion in deactivating the Auto-Ex feature once the system is activated for a particular security, the specialist does retain the ultimate decision of which stocks will be executed automatically. The Commission remains concerned with this aspect of the proposal even though all non-marketable limit orders should receive the same treatment, whether executed manually or through the Auto-Ex system.

The Commission believes that it would be appropriate to allow the Exchange to re-implement Auto-Ex for a one-year period to afford the Exchange and the Commission an opportunity to monitor the operation of the pilot and determine its effectiveness.[14] The

[5] *See* Securities Exchange Act Release No. 32124 (Apr. 13, 1993), 58 FR 21325 (approving File No. SR–MSE–92–03).

[6] In the original pilot program, the Auto-Ex was to operate by comparing the size of CHX-entered limit order against the amount of stock ahead of that order in the ''consolidated market'' rather than in the primary market. This change is the one modification made by the Exchange to the original pilot program. Telephone conversation with Craig Long, Foley & Lardner, and Jennifer Choi, Attorney, Division of Market Regulation, SEC, on April 17, 1995.

[7] For example, if the primary market quotation is ¼ bid, ½ offered, 4,000 shares bid and 4,000 shares offered, and a CHX specialist receives a limit order to buy 2,000 shares for ⅛, that limit order will not be compared against the amount of stock ahead of the order in the primary market until such time as the ¼ bid is exhausted and the ⅛ bid becomes the best bid. At that time, the size that is disseminated in the primary market with the ⅛ bid is the size against which the limit order is compared for Auto-Ex purposes.

[8] For example, assume a CHX specialist receives an agency limit order to buy 2,000 shares of ABC at ½. The primary market quotation is ½ bid, ¾ offered, 5,000 shares bid and 5,000 shares offered, meaning there are 5,000 shares ahead of the CHX order. The Auto-Ex system will automatically execute the entire CHX limit order after 7,000 shares print at ½ in the primary market. However, when more than 5,000 but less than 7,000 shares print at ½ in the primary market, the order will be flagged with a flashing prompt to alert the specialist that the order may be due at least a partial fill. *See* CHX Article XX, Rule 37(a) governing primary market protection of certain limit orders.

[9] The CHX specialist will be the contra-side of all Auto-Ex trades. *See* Securities Exchange Act Release No. 32124 (Apr. 13, 1993), 58 FR 21325 (approving File No. SR–MSE–92–03).

[10] Telephone conversation between Craig Long, Foley & Lardner, and Glen Barrentine and Jennifer Choi, Division of Market Regulation, SEC, on May 3, 1995.

[11] Under CHX Rule 37(b)(7), specialists generally are required to automatically execute nonmarketable agency limit orders at the limit price when there is a price penetration of the limit price in the primary market.

[12] A limit order is called ''marketable'' when the prevailing best offer (bid) is equal to or less (greater) than the limit buy (sell) order price. CHX Rule 37(b)(7) provides for the automatic execution at the best bid or best offer disseminated pursuant to Rule 11Ac1–2 (''BBO'') or better of all limit orders that are marketable when entered into the MAX system provided that such orders are of a certain size and otherwise are eligible for execution under CHX Rule 37(a).

[13] 15 U.S.C. 78f(b) (1988 & Supp. v 1993).

[14] The Exchange has indicated that the Auto-Ex system can become operational immediately upon the approval of the proposal. Telephone conversation between Craig Long, Foley & Lardner,

Exchange should monitor the use of the system during the one-year pilot period and assure the Commission that manually-executed orders and Auto-Ex orders do not receive differential treatment. Moreover, the Exchange should examine the program during the pilot period to determine whether specialists are choosing the stocks to include in Auto-Ex on a discriminatory basis.

The Commission, therefore, requests that the Exchange submit a report to the Commission by May 31, 1996, describing its experience with the pilot program. At a minimum, this report should contain the following data gathered during the first 10-month period after the start-up date for Auto-Ex: (1) The total number of issues and specialists using Auto-Ex including their percentages in comparison to the Exchange's market as a whole; (2) a break down of each issue subject to Auto-Ex during the pilot period, including each date the issue was placed on Auto-Ex and removed; (3) the types of securities being chosen for Auto-Ex (if a pattern is discernable); and (4) whether any distinguishable market condition existed when an issue was placed on or taken off Auto-Ex. The Commission is also interested in the length of time between a print in the primary market and the resulting fill on CHX for both the issues on Auto-Ex and those issues not on Auto-Ex. Any requests to modify this pilot program, to extend its effectiveness, or to seek permanent approval for the pilot program also should be submitted to the Commission by May 31, 1996, as a proposed rule change pursuant to section 19(b) of the Act.

It is therefore ordered, pursuant to section 19(b)(2) of the Act,[15] that the proposed rule change (SR–CHX–95–11) is approved for a one-year period ending on July 31, 1996.

For the Commission, by the Division of Market Regulation, pursuant to delegated authority.[16]

Margaret H. McFarland,

Deputy Secretary.

[FR Doc. 95–17730 Filed 7–18–95; 8:45 am]

BILLING CODE 8010–01–M

and Jennifer s. Choi, Attorney, Division of Market Regulation, SEC, on July 5, 1995.

[15] U.S.C. 78s(b)(2) (1988).

[16] 17 CFR 200.30–3(a)(12) (1994).

[Release No. 34–35961; File No. SR–NASD–95–29]

Self-Regulatory Organizations; Filing of Proposed Rule Change by National Association of Securities Dealers, Inc. to the Corporate Financing Rule at Article III, Section 44 of the Rules of Fair Practice Regarding Rights of First Refusal

July 12, 1995.

Pursuant to section 19(b)(1) of the Securities Exchange Act of 1934 (''Act''),[1] notice is hereby given that on June 1, 1995, the National Association of Securities Dealers, Inc. (''NASD'' or ''Association'') filed with the Securities and Exchange Commission (''SEC'' or ''Commission'') the proposed rule change as described in Items I, II, and III below, which Items have been prepared by the NASD. The Commission is publishing this notice to solicit comments on the proposed rule change from interested persons.

I. Self-Regulatory Organization's Statement of the Terms of Substance of the Proposed Rule Change

The NASD is proposing to amend Article III, section 44 of the Rules of Fair Practice regarding rights of first refusal. Proposed new language is in italics; proposed deletions are bracketed.

Rules of Fair Practice, Article III, The Corporate Financing Rule, Underwriting Terms and Arrangements

Section 44

* * * * *

(c) Underwriting Compensation and Arrangements

* * * * *

(3) Items of Compensation

(A) For purposes of determining the amount of underwriting compensation received or to be received by the underwriter and related persons pursuant to paragraph (c)(2) above, the following items and all other items of value received or to be received by the underwriter and related persons in connection with or related to the distribution of the offering, as determined pursuant to paragraph (c)(4) below shall be included:

* * * * *

(ix) any right of first refusal provided to the underwriter and related persons to underwrite or participate in future *public* offerings, *private placements or other financings* [by the issuer], which will have a compensation value of 1% of the offering proceeds or that dollar amount contractually agreed to by the issuer and underwriter to waive *or terminate* the right of first refusal;

* * * * *

(6) Unreasonable Terms and Arrangements

* * * * *

(B) Without limiting the foregoing, the following terms and arrangements, when proposed in connection with the distribution of a public offering of securities, shall be unfair and unreasonable:

* * * * *

(v) any right of first refusal *provided to the underwriter and related persons* [regarding] *to underwrite or participate in* future public offerings, private placements or other financings which*:*

(1) has a duration of more than [five (5)] *three (3)* years from the effective date of the offering; or

(2) has more than one opportunity to waive or terminate the right of first refusal in consideration of any payment or fee;

(vi) any payment or fee to waive or terminate a right of first refusal regarding future public offerings, private placements or other financings provided to the underwriter and related persons which:

(1) has a value in excess of the greater of one percent (1%) of the offering proceeds in the public offering where the right of first refusal was granted (or an amount in excess of one percent if additional compensation is available under the compensation guideline of the original offering) or five percent (5%) of the underwriting discount or commission paid in connection with the future financing (including any overallotment option that may be exercised), regardless of whether the payment or fee is negotiated at the time of or subsequent to the original public offering; or

(2) is not paid in cash.

Subsection (vi)–(xii) are renumbered (vii)–(xiii).

II. Self-Regulatory Organization's Statement of the Purpose of, and Statutory Basis for, the Proposed Rule Change

In its filing with the Commission, the NASD included statements concerning the purpose of and basis for the proposed rule change and discussed any comments it received on the proposed rule change. The text of these statements may be examined at the places specified in Item IV below. The NASD has prepared summaries, set forth in sections (A), (B), and (C) below, of the most significant aspects of such statements.

(A) Self-Regulatory Organization's Statement of the Purpose of, and Statutory Basis for, the Proposed Rule Change

Background

The NASD developed its policy on the valuation of rights of first refusal in the early 1970s. Rights of first refusal are typically negotiated in connection with an issuer's initial public offering and grant the underwriter a right to underwrite or participate in any future public offerings, private placements, or other financings by the issuer for a certain period of years. The NASD values rights of first refusal as a non-cash item of compensation at one

[1] 15 U.S.C. 78s(b)(1) (1988).

percent of the offering proceeds and currently limits the duration of the right to 5 years.[2] To the extent that an underwriting agreement includes a provision specifying a dollar amount for the waiver or termination of a right of first refusal, it has been the policy of the NASD Corporate Financing Department (''Department'') under the Corporate Financing Rule to value the right of first refusal on the basis of the specified dollar amount in place of the one percent valuation.

The NASD believes that members should be permitted to negotiate to waive or terminate a right of first refusal in the event that the issuer wishes to use a different underwriter to subsequently raise additional capital through a public or private offering of its securities, provided that amounts negotiated are limited to an amount that has some relation to the size of the subsequent offering in which the member is not participating. Because use of right of first refusal are primarily confined to certain underwriters of companies that are generally small and without significant operating history, the NASD has found that issuers negotiating with an underwriter for the first time in connection with an initial public offering often may not fully comprehend that they have agreed to extend their relationship with the underwriter for as many as five years, nor be in a position to influence the terms of the right. In addition, the NASD has observed that certain underwriters routinely negotiate to receive rights of first refusal at the time of an initial public offering and later negotiate to waive or terminate their rights, apparently without any original intent to actually underwrite any subsequent offering of securities by the issuer.

The NASD is concerned that underwriters not be permitted to avoid underwriting compensation limits by negotiating to waive or terminate a right of first refusal with no limitation whatsoever on the amount of compensation they might negotiate to receive. The NASD is also concerned that an issuer may find it difficult to negotiate appropriate underwriting compensation with a new underwriter, where the issuer has determined to sever its relationship with its former underwriter and the former underwriter requires a substantial payment to waive or terminate its right of first refusal. Finally, the NASD believes that the policy on rights of first refusal should also protect investors, who ultimately incur the cost when an issuer compensates an underwriter for waiving or terminating a right of first refusal.

Description of Proposed Rule Change

Three-Year Duration

Currently, the NASD Corporate Financing Rule at section 44(c)(6)(B)(v) to Article III of the Rules of Fair Practice prohibits, as unreasonable, any ''right of first refusal'' regarding future public offerings, private placements or other financings that has a duration of more than five (5) years from the effective date of the offering. The NASD is concerned that smaller issuers entering into these agreements may not be in a position to fully evaluate the ramifications of agreeing to a right of first refusal with a term of five years. In addition since the NASD staff rarely, if ever, sees a right of first refusal with a term less than five years, the duration of rights may not be freely negotiated by the issuer and the underwriter. The NASD has determined that a right of first refusal with a duration of five years is overreaching and that a three-year period is more appropriate. The NASD is proposing to modify section 44(c)(6)(B)(v) to Article III of the Rules of Fair Practice to reduce the duration of the right of first refusal from five years to three years. That portion of subparagraph (v) referring to the proposed three-year limitation is proposed to be separated and numbered as new subparagraph (v)(1).

Number of Payments for Waiver/Termination

The NASD finds that certain underwriters routinely negotiate to receive rights of first refusal at the time of an initial public offering and later negotiate, repeatedly, to waive or terminate their rights, apparently without any original intent to actually underwrite any subsequent offerings of securities by the issuer. The NASD is concerned over underwriters receiving a ''stand-aside'' payment for each subsequent offering by an issuer that has established a relationship with a new underwriter, where the original underwriter is no longer providing any bona fide services to the issuer.

The NASD also is concerned that multiple stand-aside payments by the issuer to a member result in difficulty for both the member and the NASD in tracking the payments received over the term of the right. Such tracking is important in order to insure compliance with the Corporate Financing Rule's compensation guidelines for the original offering.[3]

The NASD, therefore, proposes to add a new subparagraph (v)(2) to section 44(c)(6)(B) to Article III of the Rules of Fair Practice to limit a member to one opportunity to waive or terminate a right of first refusal in consideration of any payment or fee. The NASD notes that an underwriter not wishing to terminate its right of first refusal for future offerings may preserve its right by waiving its participation in a particular offering without accepting payment for such waiver.

Limitation on Waiver/Termination Compensation

The NASD believes that members should be permitted to negotiate to waive or terminate a right of first refusal in the event that the issuer wishes to use a different underwriter to subsequently raise additional capital through a public or private offering of its securities. However, the NASD believes that the amounts negotiated for the waiver or termination of the right should be limited to an amount that has some relation either to the original offering or to the subsequent offering in which the member is not participating.

The NASD is concerned that the cost to the issuer of raising additional capital may become excessive where the issuer's former underwriter requires an excessive payment to waive or terminate its right of first refusal. The NASD, therefore, proposes to limit the amount of such waiver/termination payments by adding a new subparagraph (vi) to section 44(c)(6)(B) to Article III of the Rules of Fair Practice. New subparagraph (vi)(1) would prohibit any payment to waive or terminate a right of first refusal that has a value in excess of the greater of 1% of the original offering (or a higher amount if additional compensation is available under the compensation guideline applicable to the original offering) or 5% of the underwriting discount or commission paid in connection with the future offering (including any overallotment option that may be exercised), regardless of whether the payment or fee is negotiated at the time of or subsequent to the original public offering.

The proposed provision is intended to balance the interests of former underwriters and issuers by prescribing

[2] *See*, Corporate Financing Rule at Article III, Section 44 of the Rules of Fair Practice (Corporate Financing Rule), section (c)(3)(A)(ix) and section (c)(6)(B)(v). NASD Manual, paragraph 2200D at pages 2206 and 2209.

[3] The NASD anticipates that the former underwriter will contact the NASD Corporate Financing Department when it is negotiating a waiver or termination of a right of first refusal to obtain information on whether additional compensation is available under the compensation guideline applicable to the original offering.

a formula for waiver/termination payments that allows former underwriters to participate in the success of issuers, while at the same time not jeopardizing that success with a payment so large that it harms an issuer's ability to conduct and realize the benefits of a secondary offering.[4] The proposed one percent limitation reflects the NASD's belief that it is appropriate that the former underwriter be permitted to negotiate a fee that is at least equal to the valuation of the right of first refusal in connection with the NASD's review of the original offering in the event that the issuer wishes to sever its relationship with the former underwriter.[5] The five percent alternative limitation reflects the NASD's belief that the former underwriter that assumed the risk of distributing the issuer's IPO should be allowed to participate or equitably benefit in the issuer's subsequent offering of securities, including any overallotment option that may be exercised, regardless of whether the payment or fee is negotiated at the time of or subsequent to the original public offering.

Cash Payment Requirement

The NASD also proposes adding provision (2) to the new subparagraph (vi) of section 44(c)(6)(B) to Article III of the Rules of Fair Practice to specify that compensation to members for waiving or terminating a right of first refusal must be in the form of cash. The NASD believes this provision will limit the waiver/termination payment to a percentage of the capital raised in the secondary offering and protect the company's shareholders from dilution resulting from the issuance of shares to a former underwriter.

Additional Clarifications

The proposed rule change would revise subparagraph (ix) to section 44(3)(A) and subparagraph (v) to section 44(6)(B) to Article III of the Rules of Fair Practice to make the rule language consistent. The rule change to subparagraph (ix) to section 44(c)(A) would clarify policy that any right of first refusal provided to the underwriter and related persons to underwrite or participate is applicable to all future ''public'' offerings and ''private placements or other financings.''

The proposed rule change would also revise subparagraph (v) to section 44(6)(B) to Article III of the Rules of Fair Practice to clarify current policy that all unreasonable terms and arrangements cited under subparagraph (v) to section 44(6)(B) shall apply to any right of first refusal ''provided to the underwriter and related persons to underwrite and participate in'' future public offerings, private placements or other financings.

Implementation of Rule

The NASD is proposing to make the proposed rule change applicable to filings made with the Corporate Financing Department of the NASD that are not yet effective with the SEC on the date of implementation of the rule change announced by the NASD in a Notice to Members following SEC approval. The implementation date announced by the NASD will not be more than 90 days following SEC approval of the rule change. Thus, offerings filed with the Corporate Financing Department that have not become effective with the SEC on the date of implementation announced by the NASD will be required to comply with the proposed rule change, regardless of whether the Corporate Financing Department has previously issued an opinion that it has no objections to the terms and arrangements. It is the intention of the Corporate Financing Department after the proposed rule change has been published for comment to include a notification with all correspondence with counsel to members regarding this proposed amendment to the Corporate Financing Rule.

The NASD believes that the proposed rule change is consistent with the provisions of section 15A(b)(6) of the Act which provides that the proposed rule change be designed to prevent fraudulent and manipulative acts and practices, to promote just and equitable principles of trade, to remove impediments to and perfect the mechanism of a free and open market and a national market system, and, in general, to protect investors and the public interest in that the proposed rule change will preserve ''rights of first refusal'' as a valuable item of compensation to an underwriter, while protecting issuers and investors from excessive payments to waive or terminate a right of first refusal granted to a former underwriter.

(B) Self-Regulatory Organization's Statement on Burden on Competition

The NASD does not believe that the proposed rule change will result in any burden on competition that is not necessary or appropriate in furtherance of the purposes of the Act, as amended.

(C) Self-Regulatory Organization's Statement on Comments on the Proposed Rule Change Received From Members, Participants, or Others

The proposed rule change was published for comment in Notice to Members 94–82 (Oct. 1994). Four comments were received in response thereto and were generally opposed to the proposed rule.[6]

The major issues raised by the commenters can be generally categorized as follows: (1) The duration of a right of first refusal, (2) the number of payments permitted for waiver or termination of a right, (3) limits on waiver/termination compensation, (4) the cash payment requirement, and (5) the valuation of rights of first refusal.[7]

Duration of the Right of First Refusal

The proposed rule change would limit the term of a right of first refusal to a maximum of three years.[8] Two commenters argued that early stage companies operate unprofitably for more than three years after an IPO and, as a result, limiting a right of first refusal to three years could prevent the underwriter from realizing the benefits of underwriting an offering for a financially stable issuer. Two commenters also argued that securities offerings of smaller issuers are inherently riskier for the underwriter than securities offerings of more financially-stable companies. Typically, small early-stage companies are not well known to the public market and, because of the size and limited

[4] The NASD does not include the payment to waive or terminate a right of first refusal as compensation in connection with its review of the subsequent offering of securities. The proposed rule change does not modify this practice.

[5] For example, where the offering proceeds of the original offering were $10 million and the new offering is to be $150 million, with a discount of 6 percent or $9 million, the member could negotiate a fee for waiver or termination of the right of first refusal of up to $450,000 (5 percent of $9 million), which is greater than 1 percent of $10 million, or $100,000.

[6] Comment letters were submitted by Lew Lieberbaum and Co., Inc.; Spelman & Co., Inc.; Kelley Drye and Warren; and Bachner, Tally, Polevoy and Misher.

[7] Notice to Member 94–82 incorrectly stated that the NASD is proposing to amend the methodology employed by the NASD for valuing a right of first refusal, which as currently valued for compensation purposes is 1% of the gross proceeds of the offering, or the amount specified in the underwriting contract to waive or terminate the right. The incorrect rule language would have limited the compensation value of a right of first refusal to the ''lesser of'' 1% of the gross offering proceeds on the contracted amount. The NASD is not considering such a proposed rule change and the comments opposing this proposal, therefore, are not discussed in this filing.

[8] Two commenters expressed concern with the proposed reduction in the maximum permissible duration of a right of first refusal from five years to three years and one commenter generally agreed that the 3-year limit was reasonable, and one commenter expressed no view.

resources of the underwriter or restrictions as a result of state blue sky laws, the offering is limited with regard to possible purchasers of the securities. These commenters believe, therefore, that the underwriter should be compensated commensurate with the greater risk of the IPO. One commenter suggested that there is no downside to the issuer to a five-year right of first refusal. The issuer is not obligated to use the services of the original underwriter, but rather is merely prevented from undertaking an offering with another underwriter without compensating the original underwriter. Furthermore, one commenter argued that the issuer and underwriter are free to negotiate a right of first refusal of lesser duration, and to limit expressly duration to three years would hinder the ability of an early stage company to gain access to the public capital markets by reducing the incentive to underwrite such a company's securities.

In response to the above comments, the NASD remains concerned that smaller issuers entering into these agreements may not be in a position to evaluate fully the ramifications of agreeing to a right of first refusal with terms of five years. The NASD also has concluded that such issuers are often not in a position to influence such terms. In support of this belief, the NASD finds that it rarely if ever sees a right of first refusal with a term of less than five years. The five-year maximum term is routinely included in letters of intent and underwriting agreements and appears to be presented to issuers as a usual and customary underwritten arrangement that is non-negotiable.

One commenter suggested that offerings that meet the definition of ''small business issuer'' under Regulation S–B of the Securities Act of 1933 (the ''Securities Act'') and offerings conducted under Regulation A of the Securities Act be permitted to retain a five year right of first refusal while rights in offerings of all other issuers would be limited to three years. The commenter argues that the NASD has historically acknowledged the inherent risk of underwriting small issuers by permitting a greater percentage of underwriting compensation for smaller offerings, and proposes that a comparable analysis be applied to the duration of a right of first refusal.

In response, the NASD believes the commenter's suggestion would exempt from the proposed rule change those smaller issuers who are most unable to evaluate the ramifications of the rights of first refusal and who have the least ability to influence the right's terms. Upon review, the NASD also does not believe the 3-year limitation will reduce the ability of smaller issuers to obtain financing from members.

One commenter agreed that the three-year limitation appeared reasonable but that there should be room for exceptions. For example, the commenter suggests that if an issuer does exceptionally well during this period and issues securities of an affiliated company in a spinoff transaction, the underwriter's three-year time period should begin anew as vis-a-vis the spinoff. The NASD notes that exceptions to the Corporate Financing Rule may be granted by a Hearing Subcommittee of the Corporate Financing Committee in connection with a member's request for review of a staff determination that proposed offering terms and arrangements are unfair and unreasonable. With regard to the commenter's example, the NASD does not believe the contractual obligation of a company to its original underwriter under a right of first refusal should automatically become the obligation of that company's affiliate when it goes public through a spin-off transaction.

Number of Payments for Waiver/Termination

The proposed rule change would permit only one payment to a member for waiving a right of first refusal in connection with a subsequent financing. Upon such payment, the right would be deemed to be terminated.[9]

Commenters argued that such a limitation unfairly penalizes the underwriter and that one payment should not affect subsequent offerings during the term of the right. Despite such arguments, the NASD's concerns remain regarding underwriters receiving a ''stand-aside'' payment for each subsequent offering by an issuer that has established a relationship with a new underwriter when the original underwriter is no longer providing any bona fide services to the issuer. In addition, the NASD believes that multiple payments result in greater difficulty for both the member and the NASD in terms of tracking the amounts received over the term of the right in order to insure compliance with the compensation guideline of the original offering. The NASD also notes that an underwriter not wishing to terminate its right of first refusal for future offerings may preserve its right by waiving its participation in a particular offering without accepting payment for such waiver.

One commenter argued that the NASD is unnecessarily interfering with the contractual relationship between the issuer and the underwriter, who are free to negotiate a termination of the right if they so desire. In response, the NASD notes that the Corporate Financing Rule is intended to regulate certain contractual provisions between underwriters and issuers to protect the investors in these issues. The NASD believes this provision of the proposed rule change will protect the investors of smaller issuers who are less likely to be able to influence or negotiate the termination of the right of first refusal.

One commenter argued that this provision of the proposed rule change would force members to relinquish their right for very small payment because the secondary offering is not likely to be as large as the example cited in Notice to Members 94–82 and in footnote 3 of this filing (where the original offering was $10 million and the new offering is $150 million). The commenter argues that an underwriter may be willing to accept substantially less to waive its right in order to allow an issuer other financing options if the right of first refusal were to remain intact with respect to future financings. In response, the NASD notes that under the proposed rule change, underwriters may waive their right to an unlimited number of times if they do not receive a payment. Therefore, an underwriter not wishing to terminate its right of first refusal for future offerings may preserve the right by waiving its participation in an offering and by not accepting payment for the waiver.

Limits on Waiver/Termination Compensation

The proposed rule change would limit the amount of any payment or fee to waive or terminate a right of first refusal to the greater of 1 percent (1%) of the original offering proceeds or 5 percent (5%) of the commission paid with respect to the subsequent offering. One commenter argued that there should be no limitation on the amount of the permitted fee for waiving or terminating a right and that any fee should be determined by arms-length negotiation between the issuer and the underwriter, who are uniquely capable of judging the value of the right. The commenter states that in many cases the right of first refusal has no value to the member because many early-stage issuers do not achieve a level of growth sufficient to warrant a subsequent offering of their securities and, therefore, the member has forfeited 1% of the original offering

[9] Three of the four commenters were opposed to limiting the receipt of compensation for waiving or terminating a right of first refusal to one time.

to obtain a right for which it derives no related benefit.

As discussed above, the NASD remains concerned about the initial capacity of smaller issuers to understand the ramifications of the right of first refusal in an IPO and its ability to influence the terms of the right. Moreover, to protect the investors in the issuer, the NASD has concluded that its concerns necessitate the restrictions contained in the proposed rule change.

The commenter also argues that it is the issuer that has the upper hand in setting the terms of the secondary offering and if the member does not agree to these terms, the issuer is free to arrange for the secondary offering to be underwritten by another member. In response, the NASD considers it unlikely that issuers intentionally set the terms of their secondary offerings to discourage the initial underwriter. The NASD believes the normal priority for issuers when setting the terms of their secondary offerings is optimum capital formation. In particular, the typical secondary offering of a small business issuer is considerably larger than the issuer's initial public offering.

The above commenter, while opposing a payment limitation, suggested in lieu of the proposed limitation that the NASD adopt a range of permissible cash payments as a percentage of the subsequent offerings depending on the size and stage of development of the issuer and the dollar amount of the offering. The commenter considers the 5 percent limitation arbitrary and suggested that payments up to 20% of the underwriting compensation of the subsequent offering be permitted to be received by underwriters of small business issuers or of offerings of less than $25 million in order to allow a fair compensation to the member. In response, the NASD believes that a payment equal to 20% of the underwriting compensation of a subsequent offering would create a hardship for smaller issuers, and consequently their investors, in terms of reduced net proceeds and/or the ability to attract a new underwriter. The NASD's determination to base the percentage at 5% was not arbitrary but determined after considerable deliberation to balance the interests of the former underwriter and the issuer and arrive at a percentage that allowed the former underwriter to participate in the success of the issuer, while not jeopardizing the success with a payment so large that it affects the issuer's ability to conduct and realize the benefits of a secondary offering.

One commenter stated that this is an ideal proposal that serves both parties. It ensures that the original underwriter is justly rewarded if the issuer becomes highly successful by preventing the issuer from severing all ties with the original underwriter without compensating it in a manner that is consistent with the underwriter's previously provided services and interests. At the same time, the proposed provision would permit the issuer to ascertain the actual cost of terminating or waiving the right at the time of the original and subsequent offering. The commenter also supported this proposal on the basis that it is appropriate to base the amount of payment to the original underwriter on the amount of the new underwriter's compensation.

Cash Payment Requirement

The proposed rule change specifies that compensation to members for waiving or terminating a right of first refusal must be in the form of cash. One commenter argued that the proposal to require only cash payments in consideration of the waiver or termination of a right would work to the detriment of both underwriters and issuers since early-stage companies often lack the liquidity to make substantial cash payments. The commenter believes that requiring issuers to make payments in cash could reduce working capital and damage a small company's ability to meet payment obligations, thus jeopardizing the company's ability to function as a going concern. In response, the NASD believes that a company should have sufficient cash available from the proceeds of the subsequent offering to make any necessary payment to a former underwriter holding a right of first refusal. The NASD also believes this provision of the proposed rule change is appropriate to protect the company's shareholders from the dilution resulting from the issuance of securities to a former underwriter.[10]

Other Comments

Two commenters addressed the NASD's statements that issuers negotiating with an underwriter often may not be in a position to influence the terms of the right of first refusal or fully comprehend that they have agreed to extend their relationship with the underwriter for five years. One commenter noted, specifically, that issuers are represented by counsel and that most issuers have knowledgeable, competent officers who are aware of the terms of their agreement with the underwriter. This commenter argued that the proposed rule change imposes undue restrictions on the ability of underwriters and issuers to negotiate a mutually acceptable arrangement. In spite of such arguments, the NASD's concerns remain that small issuers, even with counsel, may not understand the ramifications of the right of first refusal, nor be able to influence the terms of these agreements. The NASD has often found that issuer's counsel is generally experienced in corporate law and inexperienced in securities law matters. The NASD reiterates the regulatory purposes of the Corporate Financing Rule is to protect investors in such issuers. One commenter stated that it appears that the committees of the NASD are representative of major sized firms putting forth recommendations for rule changes that will eventually give the major underwriters and wire houses more and more control of the industry. In response, the NASD notes that the standing Committees of the NASD Board of Governors consist of members from both large and small firms. The Corporate Financing Committee was the review committee for the proposed rule change and, at the time this matter was considered, was chaired by an individual representing a very small NASD member.

[10] Any such securities would, moreover, be in addition to securities that the former underwriter previously acquired in connection with the original public offering.

III. Date of Effectiveness of the Proposed Rule Change and Timing for Commission Action

Within 35 days of the date of publication of this notice in the **Federal Register** or within such longer period (i) as the Commission may designate up to 90 days of such date if it finds such longer period to be appropriate and publishes its reasons for so finding or (ii) as to which the self-regulatory organization consents, the Commission will:

A. By order approve such proposed rule change, or

B. Institute proceedings to determine whether the proposed rule change should be disapproved.

IV. Solicitation of Comments

Interested persons are invited to submit written data, views, and arguments concerning the foregoing. Persons making written submissions should file six copies thereof with the Secretary, Securities and Exchange Commission, 450 Fifth Street, NW., Washington, DC 20549. Copies of the submission, all subsequent amendments, all written statements with respect to the proposed rule change that are filed with the

Commission, and all written communications relating to the proposed rule change between the Commission and any person, other than those that may be withheld from the public in accordance with the provisions of 5 U.S.C. 552, will be available for inspection and copying in the Commission's Public Reference Room. Copies of such filing will also be available for inspection and copying at the principal office of the NASD. All submissions should refer to File Number SR–NASD–95–29 and should be submitted by August 9, 1995.

For the Commission, by the Division of Market Regulation, pursuant to delegated authority.[11]

Margaret H. McFarland,

Deputy Secretary.

[FR Doc. 95–17731 Filed 7–18–95; 8:45 am]

BILLING CODE 8010–01–M

SMALL BUSINESS ADMINISTRATION

[License No. 03/03–0201]

Shenandoah Venture Capital, L.P.; Notice of Issuance of a Small Business Investment Company License

On Thursday, November 3, 1994, a notice was published in the **Federal Register** (Vol. 59, No. 212, FR 55148) stating that an application had been filed by Shenandoah Venture Capital, L.P., at 208 Capital Street, Suite 300, Charleston, West Virginia 25301, with the Small Business Administration (SBA) pursuant to Section 107.102 of the Regulations governing small business investment companies (13 CFR 107.102 (1995)) for a license to operate as a small business investment company.

Interested parties were given until close of business Friday, November 18, 1995 to submit their comments to SBA. No comments were received.

Notice is hereby given that, pursuant to Section 301(c) of the Small Business Investment Act of 1958, as amended, after having considered the application and all other pertinent information, SBA issued License No. 03/03–0201 on June 1, 1995, to Shenandoah Venture Capital, L.P. to operate as a small business investment company.

(Catalog of Federal Domestic Assistance Program No. 59.011, Small Business Investment Companies)

Dated: July 10, 1995.

Robert D. Stillman,

Associate Administrator for Investment.

[FR Doc. 95–17649 Filed 7–18–95; 8:45 am]

BILLING CODE 8025–01–M

[11] 17 CFR 200.30–3(a)(12).

[License No. 02/02–0562]

UBS Partners, Inc.; Notice of Issuance of a Small Business Investment Company License

On Tuesday, February 28, 1995, a notice was published in the **Federal Register** (Vol. 60, No. 39, FR 10891) stating that an application had been filed by UBS Partners, Inc., at 299 Park Avenue, New York, New York 10171, with the Small Business Administration (SBA) pursuant to Section 107.102 of the Regulations governing small business investment companies (13 CFR 107.102 (1995)) for a license to operate as a small business investment company.

Interested parties were given until close of business Wednesday, March 15, 1995 to submit their comments to SBA. No comments were received.

Notice is hereby given that, pursuant to Section 301(c) of the Small Business Investment Act of 1958, as amended, after having considered the application and all other pertinent information, SBA issued License No. 02/02–0562 on May 24, 1995, to UBS Partners, Inc. to operate as a small business investment company.

(Catalog of Federal Domestic Assistance Program No. 59.011, Small Business Investment Companies)

Dated: July 10, 1995.

Robert D. Stillman,

Associate Administrator for Investment.

[FR Doc. 95–17648 Filed 7–18–95; 8:45 am]

BILLING CODE 8025–01–M

DEPARTMENT OF TRANSPORTATION

Office of the Secretary

Reports, Forms and Recordkeeping Requirements

AGENCY: Department of Transportation (DOT), Office of the Secretary.

ACTION: Notice.

SUMMARY: This notice lists those forms, reports, and recordkeeping requirements imposed upon the public which were transmitted by the Department of Transportation to the Office of Management and Budget (OMB) for its approval in accordance with the requirements of the Paperwork Reduction Act of 1980 (44 USC Chapter 35).

DATE: July 13, 1995.

ADDRESSES: Written comments on the DOT information collection requests should be forwarded, as quickly as possible, to Edward Clarke, Office of Management and Budget, New Executive Office Building, Room 10202, Washington, DC 20503. If you anticipate submitting substantive comments, but find that more than 10 days from the date of publication are needed to prepare them, please notify the OMB official of your intent immediately.

FOR FURTHER INFORMATION CONTACT: Copies of the DOT information collection requests submitted to OMB may be obtained from Susan Pickrel or Gemma deGuzman, Information Resource Management (IRM) Strategies Division, M–32, Office of the Secretary of Transportation, 400 Seventh Street, SW, Washington, DC 20590, (202) 366–4735.

SUPPLEMENTARY INFORMATION: Section 3507 of Title 44 of the United States Code, as adopted by the Paperwork Reduction Act of 1980, requires that agencies prepare a notice for publication in the **Federal Register**, listing those information collection requests submitted to OMB for approval or renewal under that Act. OMB reviews and approves agency submissions in accordance with criteria set forth in that Act. In carrying out its responsibilities, OMB also considers public comments on the proposed forms and the reporting and recordkeeping requirements. OMB approval of an information collection requirement must be renewed at least once every three years.

Items Submitted to OMB for Review

The following information collection requests were submitted to OMB on July 13, 1995:

DOT No: 4084.

OMB No: 2127–New.

Administration: National Highway Traffic Safety Administration.

Title: National Survey of Drinking and Driving Attitudes and Behaviors: 1995.

Need for Information: 15 U.S.C. section 1395b, Exhibit V, gives the Secretary authorization to conduct research, testing, development, and training as authorized to be carried out by subsections of this title.

Proposed Use of Information: This information will be used by the National Highway Traffic Safety Administration in planning programmatic activity addressing the DWI problem, planning strategic forms of assistance to groups involved in improving public safety and tracking progress made in reducing the DWI problem.

Frequency: One-time only.

Burden Estimate: 1,209 hours.

Respondents: Individuals randomly selected.

Form(s): None.

Average Burden Hours Per Response: 0.3 hours.

DOT No: 4085.
OMB No: 2127–0519.
Administration: National Highway Safety Administration.
Title: Uniform Tire Quality Grading Standards.
Need for Information: 49 U.S.C. 1421, 1422, and 1423 states ''the Secretary shall require that tires be permanently and conspicuously labeled with such safety information as he/she determines to be necessary to carry out the purposed of this Act.''
Proposed Use of Information: This information will be used by the NHTSA to provide and assist the public in making informed choices when purchasing motor vehicle tires.
Frequency: As needed.
Burden Estimate: 1,043,000 hours.
Respondents: Tire manufacturers.
Form(s): None.
Average Burden Hours Per Response: 1,862 hours.

DOT No: 4086.
OMB No: 2127-New.
Administration: National Highway Traffic Safety Administration.
Title: Upper Interior Component Head Impact Protection Phase-In Reporting Requirements, 15 U.S.C. 1392.
Need for Information: 15 U.S.C. 1392 of the National Traffic and Motor Vehicle Safety Act of 1966, authorizes the issuance of Federal Motor Vehicle Safety Standards (FMVSS) to require improved head protection in impacts against the vehicle upper interior components.
Proposed Use of Information: This information will be used by the National Highway Safety Administration to determine the extent to which manufacturers are complying with the requirement for improved head protection in impacts against the vehicle upper interior components.
Frequency: Annually.
Burden Estimate: 1,260 hours.
Respondents: 35 vehicle manufacturers.
Form(s): None.
Average Burden Hours Per Response: 36 hours.

DOT No: 4087.
OMB No: 2132–0502.
Administration: Federal Transit Administration (FTA).
Title: Capital and Urbanized Area Formula Programs (Sections 5309 and 5307)—Formerly Sections 3 and 9.
Need for Information: 49 U.S.C. Section 5309 and 5307 (formerly Section 3 & 9 of the Federal Transit Act) and OMB Circular A–102, and prudent administration of Federal grant funds dictate that grantor agencies review applications for Federal assistance to assure eligibility and other criteria, as appropriate, and monitor approved projects to ensure timely expenditure of Federal funds by grant recipients.
Proposed Use of Information: This information will be used by the FTA to monitor the grantee's progress in implementing and completing project activities.
Frequency: Annually, on occasion, quarterly, biennially.
Burden Estimate: 380,173 hours.
Respondents: State and local governments.
Form(s): SF–424.
Average Burden Hours Per Response: 9.16 hours.

DOT No: 4088.
OMB No: 2115–0543.
Administion: United States Coast Guard (USCG).
Title: Regulations, Certificates of Adequacy for Oil, Noxious Liquid Substance (NLS) and Garbage Reception Facilities.
Need for Information: 33 U.S.C. 1905(a), the Act to Prevent Pollutions from Ships, the USCG established regulations to determine the adequacy of reception facilities at ports and terminals and procedures to certify those facilities.
Proposed Use of Information: This information will be used by the USCG to (1) determine if reception facilities are adequate; (2) provide a procedure whereby a waiver of individual criteria may be granted; (3) publish a list in the **Federal Register** of ports and terminals that hold valid Certificates of Adequacy; and (4) establish procedures whereby a person affected by a Coast Guards action may appeal that action.
Frequency: On occasion.
Burden Estimate: 352.8 hours.
Respondents: Owners/operators of ports and terminals used by oceangoing ships handling oil, noxious liquid substances and garbage.
Form(s): CG–5401, CG–5401A, CG–5401B, CG–5401C.
Average Burden Hours Per Response: 2 hours reporting.

DOT No: 4089.
OMB No: 2115–0025.
Administration: United States Coast Guard.
Title: Oil Record Book for Ships.
Need for Information: The Act to Prevent Pollution from Ships (APPS) and the International convention for Prevention of Pollution from Ships, 1973, as modified by the 1978 Protocol relating thereto (MARPOL 73/78), requires information about oil cargo or fuel operations be entered into an Oil Record Book after certain operations are completed.
Proposed Use of Information: This information will be used by the Coast Guard to determine if there are any violations of the APPS, to ensure compliance with Marpol 73/78 and as a means of reinforcing the discharge provisions.
Frequency: On occasion.
Burden Estimate: 10,418 hours.
Respondents: Owners/operators of oceangoing vessels.
Form(s): CG–4602A.
Average Burden Hours Per Response: 2.5 hours per recordkeeper.

DOT No: 4090.
OMB No: 2115–0544.
Administration: United States Coast Guard.
Title: Advance Notice of Need for Reception Facilities.
Need for Information: 33 CFR 158.200(a) authorizes terminal operators to be given a 24 hour notice to have reception facilities available for ships that need to discharge: (a) Oil or oily waste, (b) noxious liquid substances (158.310(a)) and plastics and other garbage (158.410(a)).
Proposed Use of Information: This information will be used by the Coast Guard to determine when ships require reception facilities and to make such facilities available.
Frequency: On occasion.
Burden Estimate: 1,256.25 hours.
Respondents: Terminal operators.
Form(s): None.
Average Burden Hours Per Response: .25 minutes reporting.

Issued in Washington, DC, on July 13, 1995.

Paula R. Ewen,

Manager, Information Resource Management (IRM) Strategies Division.

[FR Doc. 95–17712 Filed 7–18–95; 8:45 am]

BILLING CODE 4910–62–M

Federal Aviation Administration

Intent To Prepare an Environmental Impact Statement and Hold a Scoping Meeting for San Jose International Airport, San Jose, California

AGENCY: Federal Aviation Administration, DOT.

ACTION: Notice to hold a public scoping meeting.

SUMMARY: The Federal Aviation Administration (FAA) is issuing this notice to advise the public that an Environmental Impact Statement will be prepared for development recommended by the Airport Master Plan Update for San Jose International Airport, San Jose, California. To ensure that all significant issues related to the

proposed action are identified, a public scoping meeting will be held.

FOR FURTHER INFORMATION CONTACT: Mr. Elisha Novak, Senior Planner, SFO–612, Federal Aviation Administration, San Francisco Airports District Office, 831 Mitten Road, Room 210, Burlingame, California 94010–1303, Telephone 415/876–2928.

SUPPLEMENTARY INFORMATION: The Federal Aviation Administration (FAA), in cooperation with the city of San Jose, California will prepare an Environmental Impact Statement for development recommended by the Airport Master Plan Update for San Jose International Airport. Since the airport environs contains non-compatible land uses in terms of aircraft noise, and the proposal is likely to be controversial, a decision has been made to prepare an Environmental Impact Statement (EIS). The city of San Jose, pursuant to the California Environmental Quality Act (CEQA) will also prepare an Environmental Impact Report (EIR) for the proposed development. In an effort to eliminate unnecessary duplication and reduce delay, the document to be prepared, will be a joint EIR/EIS in accordance with the President's Council on Environmental Quality Regulations described in title 40 Code of Federal Regulations Section 1500.5.

The Joint Lead Agencies for the preparation of the EIR/EIS will be the Federal Aviation Administration and the city of San Jose, California.

The development recommended by the Airport Master Plan Update to be evaluated in the EIR/EIS includes: Reconstruction and extension of Runway 12L–30R (from 4,400 to 11,050 feet); Reconstruction and extension of Runway 12R–30L (from 10,200 feet to 11,000 feet); Reconstruction and extension of parallel taxiways to match proposed runway extensions; Construction/reconstruction and extension of cross taxiways including several high-speed runway exits and aircraft hold aprons; Construction of new passenger terminal facilities (an increase of 18 gates for a total of 49 gates); Construction of interim public surface parking and construction of garages for public, rental car, and employee parking, expansion and relocation of cargo airline facilities; Expansion and relocation of belly-freight airline facilities; Relocation and expansion of fuel storage facilities; Expansion and relocation of other support facilities including flight kitchen and airport and airline maintenance areas, and Elimination of 300 existing general aviation aircraft storage spaces and all existing non-aviation land uses.

It is anticipated that the proposed master plan development program would be adequate to accommodate approximately 17.6 million annual passengers by the year 2010, which is the forecast level of passenger demand, as well as the projected air cargo demand in 2010. The proposed program would result in the build-out of substantially all available airport operating areas.

Alternatives: The alternatives to the proposed development that will be examined equally in the EIR/EIS include the following:

Alternative A: Similar airport improvements as listed but sized to adequately accommodate approximately 13.1 million annual passengers by the year 2010, with the following major modifications to include: reconstruction and extension of Runway 12L–30R (from 4,400 feet to 8,900 feet), construction of new passenger terminal facilities (an increase of 6 gates for a total of 37 gates), and elimination of 190 existing general aviation aircraft storage spaces and all existing non-aviation land uses.

Alternative B: Similar airport improvements as listed except for no reconstruction or extension of Runway 12L/3OR and sized to adequately accommodate approximately 12.4 million annual passengers by the year 2010, with the following other major modifications to include: Construction of new passenger terminal facilities (an increase of 4 gates for a total of 35 gates), no relocation/expansion of cargo airline facilities, and elimination of 120 existing general aviation aircraft storage spaces.

No Action for each of the proposed project improvements and Alternatives A or B will also be considered.

On July 7, 1995, the city of San Jose issued a Notice of Preparation of a joint EIR/EIS for the ''San Jose International Airport Master plan Update'' in accordance with Section 15222 of the California Environmental Quality Act. The FAA intends to cooperate with local and state agencies to the fullest extent possible to reduce duplication between federal and state environmental requirements.

Comments and suggestions are invited from Federal, State and local agencies, and other interested parties to ensure that the full range of issues related to these proposed projects are addressed and all significant issues identified. Comments and suggestions may be mailed to the FAA informational contact listed above.

Public Scoping Meeting: Scoping of the processing of a joint EIR/EIS is anticipated to include both a public scoping meeting for governmental agencies and a scoping meeting for the general public concerning the range of actions, alternatives, and impacts to be considered. Two separate meetings are to be held in order to allow members of the public to attend who would not be able to during normal business hours. The governmental agency scoping meeting is scheduled to be held on August 21, 1995, between 1:30 p.m. and 4 p.m. at San Jose City Hall, Council Chambers (2nd Floor), 801 N. First Street, San Jose, California. The general public scoping meeting will also be held on August 21, 1995, between 6:30 p.m. and 9 p.m. at the same location.

The FAA invites interested parties to submit written comments to the FAA contact listed above.

Issued in Hawthorne, California on July 13, 1995.

Herman C. Bliss,

Manager, Airports Division, AWP–600 Western-Pacific Region.

[FR Doc. 95–17746 Filed 7–18–95; 8:45 am]

BILLING CODE 4910–13–M

Aviation Rulemaking Advisory Committee Meeting on General Aviation and Business Airplane Issues

AGENCY: Federal Aviation Administration (FAA), DOT.

ACTION: Notice of meeting.

SUMMARY: The FAA is issuing this notice to advise the public of a meeting of the Federal Aviation Administration's Aviation Rulemaking Advisory Committee to discuss general aviation and business airplane issues.

DATES: The meeting will be held on August 16, 1995, at 9:00 a.m. Arrange for oral presentations by August 9, 1995.

ADDRESSES: The meeting will be held at the Regional Airline Association, 1200 19th Street NW., 2nd Floor, Presentation Room B, Washington, DC 20005.

FOR FURTHER INFORMATION CONTACT: Carolina Forrester, Office of Rulemaking, FAA, 800 Independence Avenue, SW., Washington, DC 20591, telephone (202) 267–9690.

SUPPLEMENTARY INFORMATION: Pursuant to section 10(a)(2) of the Federal Advisory Committee Act (Pub. L. 92–463; 5 U.S.C. App. II), notice is hereby given of a meeting of the Aviation Rulemaking Advisory Committee to be held on August 16, 1995, at the Regional Airline Association, 1200 19th Street NW., 2nd Floor, Presentation Room B,

NW., Washington, DC 20005. The agenda for the meeting will include:

- Opening Remarks.
- Update on the Part 23 Harmonization Final Rules.
- Discussion of Future Tasks.
- Schedule Future Meetings.

Attendance is open to the interested public, but will be limited to the space available. The public must make arrangements by August 9, 1995, to present oral statements at the meeting. The public may present written statements to the committee, at any time, by providing 25 copies to the Assistant Executive Director, or by bringing the copies to him at the meeting. Arrangements may be made by contacting the person listed under the heading **FOR FURTHER INFORMATION CONTACT**.

Sign and oral interpretation can be made available at the meeting, as well as an assistive listening device, if requested 10 calendar days before the meeting.

Issued in Kansas City, Missouri on July 13, 1995.

John R. Colomy,

Assistance Executive Director for General Aviation and Business Airplane Issues, Aviation Rulemaking Advisory Committee

[FR Doc. 95–17747 Filed 7–18–95; 8:45 am]

BILLING CODE 4910–13–M

Notice of Passenger Facility Charge (PFC) Approvals and Disapprovals

AGENCY: Federal Aviation Administration (FAA), DOT.

ACTION: Monthly Notice of PFC Approvals and Disapprovals. In June 1995, there were 10 applications approved. Additionally, one approved amendment to a previously approved application is listed.

SUMMARY: The FAA publishes a monthly notice, as appropriate, of PFC approvals and disapprovals under the provisions of 49 U.S.C. 40117 (Pub. L. 103–272) and part 158 of the Federal Aviation Regulations (14 CFR part 158). This notice is published pursuant to paragraph d of § 158.29.

PFC Applications Approved

Public Agency: Albany-Dougherty Aviation Commission, Albany, Georgia.

Application Number: 95–01–C–00–ABY.

Application Type: Impose and use PFC revenue.

PFC Level: $3.00.

Total Approved Net PFC Revenue: $457,301.

Charge Effective Date: September 1, 1995.

Estimated Charge Expiration Date: October 1, 1999.

Class of Air Carriers Not Required To Collect PFC's: None.

Brief Description of Projects Approved for Collection and Use: Preparation of PFC application, Passenger lift device, Stormwater pollution prevention plan, Airport interactive training program, Airport/aircraft rescue and firefighting (ARFF) communications equipment, Master plan update, Resurface terminal entrance and exit road, Replace two security gates.

Brief Description of Project Approved in Part for Collection and Use: Bunker gear suits and proximity suits.

Determination: Approved in part. The public agency requested the acquisition of 10 bunker gear suits and 10 proximity suits. Airport Improvement Program (AIP) eligibility for protective suits at ABY is limited to 10 suits total. Since the proximity suits provide more protection for ARFF personnel than do bunker suits, this approval is limited to 10 proximity suits; the bunker gear suits are not eligible. The approved amount was reduced from that requested by the cost of the bunker suits.

Brief Description of Project Approved for Collection Only: Rehabilitate general aviation apron.

Brief Description of Project Disapproved: Americans with Disabilities Act (ADA) signage—terminal building.

Determination: Disapproved. Section 203 of Pub. L. 103–305 (August 23, 1994), 49 U.S.C. 40117(a)(3)(F) states that stand-alone ADA projects are PFC-eligible if the project is located on the air side of the airport. The proposed project does not meet that criteria since it is located within the terminal building which is considered the land side of the airport. While modifying signs in the terminal to improve the movement of passengers is generally AIP eligible, for this project the only modifications or additions are to meet ADA requirements. Therefore, this project must be considered a stand-alone land side ADA project and as such is not eligible for PFC funding.

Decision Date: June 14, 1995.

For Further Information Contact: Walter Bauer, Atlanta Airports District Office, (404) 305–7142.

Public Agency: Town of Mammoth Lakes, California.

Application Number: 95–01–C-00-MMH.

Application Type: Impose and use PFC revenue.

PFC Level: $3.00.

Total Approved Net PFC Revenue: $166,632.

Charge Effective Date: September 1, 1995.

Estimated Charge Expiration Date: September 1, 2002.

Class of Air Carriers Not Required to Collect PFC's: Air taxi/commercial operators.

Determination: Approved. Based on information submitted in the public agency's application, the FAA has determined that the proposed class accounts for less than 1 percent of the total annual enplanements at Mammoth Lakes Airport.

Brief Description of Projects Approved for Collection and Use: Environmental assessment study and property boundary surveys, Airport masterplan update, 1993 development program.

Decision Date: June 20, 1995.

For Further Information Contact: Joseph R. Rodriguez, San Francisco Airports District Office, (415) 876–2805.

Public Agency: City of Colorado Springs, Colorado.

Application Number: 95–02–C–00–COS.

Application Type: Impose and use PFC revenue.

PFC Level: $3.00.

Total Approved Net PFC Revenue: $7,445,625.

Charge Effective Date: August 1, 1996.

Estimated Charge Expiration Date: April 1, 2000.

Class of Air Carriers Not Required To Collect PFC's: None.

Brief Description of Projects Approved for Collection and Use: Airport service road improvements, Taxiway improvement project.

Decision Date: June 20, 1995.

For Further Information Contact: Chris Schaffer, Denver Airports District Office, (303) 286–5525.

Public Agency: Bert Mooney Airport Authority, Butte, Montana.

Application Number: 95–02–U–00–BTM.

Application Type: Use PFC revenue.

PFC Level: $3.00.

Total Approved Net PFC Revenue: $410,202.

Charge Effective Date: July 1, 1994.

Estimated Charge Expiration Date: May 1, 2000.

Class of Air Carriers Not Required To Collect PFC's: The Bert Mooney Airport Authority has previously been approved to exclude a class of carriers in the April 17, 1994, Record of Decision.

Determination: No change from previously approved application.

Brief Description of Projects Approved for Use of PFC Revenue: Purchase new ARFF vehicle, Expand ARFF garage and update maintenance

building (ARFF building) improvements.

Decision Date: June 20, 1995.

For Further Information Contact: David P. Gabbert, Helena Airports District Office, (406) 449–5271.

Public Agency: Cities of Fort Collins and Loveland, Colorado.

Application Number: 95–02–C–00–FNL.

Application Type: Impose and use PFC revenue.

PFC Level: $3.00.

Total Approved Net PFC Revenue: $397,201.

Charge Effective Date: October 1, 1995.

Estimated Charge Expiration Date: October 1, 1999.

Class of Air Carriers Not Required To Collect PFC's: None.

Brief Description of Projects Approved for Collection and Use: Acquire an Index A ARFF vehicle, Extend taxiway D, Rehabilitate runway 15/33, Acquire passenger lift device.

Decision Date: June 21, 1995.

For Further Information Contact: Chris Schaffer, Denver Airports District Office, (303) 286–5525.

Public Agency: City of Spencer, Iowa.

Application Number: 95–01–C–00–SPW.

Application Type: Impose and use PFC revenue.

PFC Level: $3.00.

Total Approved Net PFC Revenue: $240,000.

Charge Effective Date: September 1, 1995.

Estimated Charge Expiration Date: September 1, 2005.

Class of Air Carriers Not Required To Collect PFC's: None.

Brief Description of Projects Approved for Collection and Use: Expand auto parking and install precision approach path indicators (PAPI's) and runway end identifier lights (REIL's), Taxiways A and B overlay and airport guidance signs—phases 1 and 2, Terminal building expansion/ remodeling.

Decision Date: June 21, 1995.

For Further Information Contact: Ellie Anderson, Central Region Airports Division, (816) 426–4728.

Public Agency: Lafayette Airport Commission, Lafayette, Louisiana.

Application Number: 95–01–C–00–LFT.

Application Type: Impose and use PFC revenue.

PFC Level: $3.00.

Total Approved Net PFC Revenue: $1,646,300.

Charge Effective Date: September 1, 1995.

Estimated Charge Expiration Date: October 1, 1999.

Class of Air Carriers Not Required To Collect PFC's: Air taxi/commercial operators.

Determination: Approved. Based on information submitted in the public agency's application, the FAA has determined that the proposed class accounts for less than 1 percent of the total annual enplanements at Lafayette Regional Airport.

Brief Description of Projects Approved for Collection and Use: Airside air carrier access act lifting device, PFC development, implementation, and administration, Perimeter road rehabilitation.

Brief Description of Project Approved in Part for Collection: Rehabilitation of runway 11/29.

Determination: Approved in part. The public agency requested the rehabilitation of the existing full width of runway 11/29 to 150 feet. Current design standards limit the eligibility for this runway to 100 feet in width. Therefore, this approval is limited to the cost associated with rehabilitating the runway to a width of 100 feet.

Brief Description of Project Disapproved: Terminal improvements and reimbursement.

Determination: Disapproved. While the Lafayette Airport Commission is asking for PFC revenue to be used to fund only those costs incurred for this project since November 5, 1990, the FAA has determined that a notice to proceed was issued or physical construction started for the proposed project prior to November 5, 1990; therefore, the project is not PFC eligible. The FAA cannot approve a project which was implemented prior to the enactment of the PFC statute, November 5, 1990.

For Further Information Contact: Ben Guttery, Southwest Region Airports Division, (817) 222–5614.

Public Agency: County of Dickinson, Iron Mountain, Michigan.

Application Number: 95–01–C–00–IMT.

Application Type: Impose and use PFC revenue.

PFC Level: $3.00.

Total Approved Net PFC Revenue: $215,820.

Charge Effective Date: September 1, 1995.

Estimated Charge Expiration Date: September 1, 2001.

Class of Air Carriers Not Required To Collect PFC's: None.

Brief Description of Project Approved for Collection and Use: Rehabilitate taxiways C, D, and E; extend runway 31 safety area, Acquire ARFF vehicle; Americans with Disabilities Act passenger lift.

Brief Description of Projects Approved for Collection Only: Install sanitary sewer, Rehabilitate runway 1/19; rehabilitate lighting and signage, runway 1/19; PAPI's and REIL's, runway 19, Construct and light taxiway H, general aviation apron; and general aviation access road.

Decision Date: June 23, 1995.

For Further Information Contact: Jon B. Gilbert, Detroit Airports District Office, (313) 487–7281.

Public Agency: Jackson County Airport Authority, Medford, Oregon.

Application Number: 95–02–U–00–MFR.

Application Type: Use PFC revenue.

PFC Level: $3.00.

Total Approved Net PFC Revenue: $882,999.

Charge Effective Date: July 1, 1993.

Estimated Charge Expiration Date: November 1, 1995.

Class of Air Carriers Not Required To Collect PFC's: The Jackson County Airport Authority has previously been approved to exclude a class of carriers in the April 23, 1993, Record of Decision.

Determination: No change from previously approved application.

Brief Description of Projects Approved for Use of PFC Revenue: Pave perimeter roadway inside airport operations area, Pavement evaluation and management plan.

Decision Date: June 26, 1995.

For Further Information Contact: Jerry Trujillo, Seattle Airports District Office, (206) 227–2629.

Public Agency: City of Chicago, Department of Aviation, Chicago, Illinois.

Application Number: 95–03–C–00–ORD.

Application Type: Impose and use PFC revenue.

PFC Level: $3.00.

Total Approved Net PFC Revenue: $531,187,544.

Charge Effective Date: September 1, 1993.

Estimated Charge Expiration Date: April 1, 1999.

Class of Air Carriers Not Required To Collect PFC's: Air taxi operators.

Determination: Approved. Based on information submitted in the public agency's application, the FAA has determined that the proposed class accounts for less than 1 percent of the total annual enplanements at Chicago O'Hare International Airport.

Brief Description of Projects Approved for Use of PFC Revenue:

Runway 9R/27L rehabilitation, Taxiway-hangar alley rehabilitation, Roadway-hangar area lighting, Concourse E/F upgrade, Concourse G upgrade.

Brief Description of Projects Approved for Collection and Use: Shoulder rehabilitation runways 4R/22L and 9L/27R, Airport transit system (ATS) remote parking lot station, Purchase two new ATS cars, Cargo tunnel structural repairs.

Brief Description of Projects Approved in Part for Collection and Use: Military site acquisition formulation.

Determination: Approved in part. The public agency requested funding for feasibility, pre-engineering, and related studies necessary for the transfer of 350 acres of real property (land and buildings) from the Department of Defense to the City of Chicago. Of the study tasks listed by the City of Chicago, the FAA has determined that only the following tasks are PFC-eligible: a level I and II environmental audit; a soils and drainage impact analysis; a roadway analysis; a demolition engineering study; and appraisal and appraisal reviews. The approval is limited to the costs associated with these tasks.

Oil separators 1, 2, and 3 rehabilitation.

Determination: Approved in part. Costs associated with general maintenance work, such as the repair of lake erosion, are not AIP eligible and, therefore, not PFC eligible. The approval is limited to the costs associated with PFC-eligible work.

Brief Description of Project Withdrawn: Voluntary acquisition (75 LDN).

Determination: This project was withdrawn by the City of Chicago by letter to the FAA dated March 22, 1995. Therefore, the FAA will not rule on this project in this decision.

Brief Description of Projects Disapproved: Perimeter security system.

Determination: Disapproved. This project does not meet the Airport Improvement Program (AIP) eligibility criteria, paragraph 563 of FAA Order 5100.38A, AIP Handbook. The proposed security fence improvements are in excess of those needed to meet Part 107 requirements and, therefore, this project is not AIP or PFC eligible.

Chicago Transit Authority (CTA) dedicated cars—study.

Determination: Disapproved. The disapproval of this study is based upon the underlying eligibility of the primary element of the study, dedicated CTA cars. The FAA has determined that the rehabilitation of existing CTA cars for airport passenger dedicated use is not eligible under AIP criteria, paragraph 303 of FAA Order 5100.38A. Accordingly, the FAA has determined that this project does not meet the requirements of section 158.15(b)(1). The proposed dedicated cars and the associated control and switching facilities would not be under the ownership or control of the City of Chicago Department of Aviation.

Decision Date: June 29, 1995.

For Further Information Contact: Louis H. Yates, Chicago Airports District Office, (708) 294–7335.

Amendments to PFC Approvals

Amendment No. city, state	Amendment approved date	Amended approved net PFC revenue	Original approved net PFC revenue	Original estimated charge exp. date	Amended estimated charge exp. date
93–01–C–01–MDW Chicago, IL	06/27/95	$73,235,112	$79,920,958	08/01/01	05/01/00

Issued in Washington, DC on July 11, 1995.

Sheryl Scarborough,

Acting Manager, Passenger Facility Charge Branch.

[FR Doc. 95–17748 Filed 7–18–95; 8:45 am]

BILLING CODE 4910–13–M

Maritime Administration

Notice of Approval of Applicant as Trustee

Notice is hereby given that The First National Bank of Maryland, National Association, with offices at 25 South Charles Street, Suite 1601, P.O. Box 1596, Baltimore, Maryland, has been approved as Trustee pursuant to Public Law 100–710 and 46 CFR Part 221.

Dated: July 12, 1995.

By Order of the Maritime Administrator.

Joel C. Richard,

Secretary.

[FR Doc. 95–17633 Filed 7–18–95; 8:45 am.]

BILLING CODE 4910–81–M

National Highway Traffic Safety Administration

International Harmonization of Safety Standards; Calendar of Meetings

AGENCY: National Highway Traffic Safety Administration (NHTSA), DOT.

ACTION: Notice of meetings.

SUMMARY: The National Highway Traffic Safety Administration (NHTSA) will continue its participation during this year in international meetings to harmonize U.S. and foreign motor vehicle safety standards. These meetings will be conducted by the Working Party on the Construction of Vehicles (WP29) under the Inland Transportation Committee of the United Nation's Economic Commission for Europe (ECE), and by the six Meetings of Experts (formerly called groups of Rapporteurs) of WP29. The NHTSA currently represents the United States in all of the Meetings of Experts except those on Pollution and on Noise.

DATES: For a list of scheduled meetings, see the **SUPPLEMENTARY INFORMATION** section of this notice. Inquiries or comments related to specific meetings should be made at least two weeks before the date of the meeting.

FOR FURTHER INFORMATION CONTACT: Francis J. Turpin, Office of International Harmonization (NOA–05), NHTSA, 400 Seventh Street, SW, Washington, DC 20590 (202–366–2114).

SUPPLEMENTARY INFORMATION: This calendar consists of those ECE meetings currently scheduled. It is published for information and planning purposes and the meeting dates and places are subject to change. NHTSA attendance at these meetings will be affected by agenda content, priorities and availability of travel funds.

September 18–19, 1995

Meeting of Experts on Noise (GRB), Twenty-Third Session—Geneva, Switzerland.

September 19–22, 1995

Meeting of Experts on Brakes and Running Gear (GRRF), Thirty-Seventh Session—Geneva, Switzerland.

October 23–27, 1995

Meeting of Experts on Lighting and Light-Signaling (GRE), Thirty-Fifth Session—Lippstadt, Germany.

October 30–November 1, 1995

Meeting of Experts on General Safety Provisions (GRSG), Sixty-Ninth Session—Geneva, Switzerland.

November 6, 1995

Administrative Committee for the Coordination of Work of WP29 +(AC.2), Fifty-Ninth Session—Geneva, Switzerland.

November 7–10, 1995

Working Party on the Construction of Vehicles (WP–29), Hundred and Seventh Session—Geneva, Switzerland.

November 27–December 1, 1995

Meeting of Experts on Passive Safety (GRSP), Eighteenth Session—Geneva, Switzerland.

December 18–20, 1995

Meeting of Experts on Brakes and Running Gear (GRRF), Thirty-Eighth Session—Geneva, Switzerland

The following meetings took place earlier this year:

January 17–19, 1995

Meeting of Experts on Pollution and Energy (GRPE), Twenty-Ninth Session—Geneva, Switzerland.

February 6–9, 1995

Meeting of Experts on Brakes and Running Gear (GRRF), Thirty-Sixth Session—Geneva, Switzerland.

March 6, 1995

Administrative Committee for the Coordination of Work of WP29 +(AC.2), Fifty-Seventh Session—Geneva, Switzerland.

March 7–10, 1995

Working Party on the Construction of Vehicles (WP–29), Hundred and Fifth Session—Geneva, Switzerland.

March 27–31, 1995

Meeting of Experts on Lighting and Light-Signaling (GRE), Thirty-Fourth Session—Geneva, Switzerland.

April 10–13, 1995

Meeting of Experts on General Safety Provisions (GRSG), Sixty-Eighth Session—Geneva, Switzerland.

May 15–19, 1995

Meeting of Experts on Passive Safety (GRSP), Seventeenth Session—Geneva, Switzerland.

June 26, 1995

Administrative Committee for the Coordination of Work of WP29+(AC.2), Fifty-Eighth Session—Geneva, Switzerland.

June 27–30, 1995

Working Party on the Construction of Vehicles (WP–29), Hundred and Sixth Session—Geneva, Switzerland.

July 10–13, 1995

Meeting of Experts on Pollution and Energy (GRPE), Thirtieth Session—Geneva, Switzerland.

Issued on July 7, 1995.

Francis J. Turpin,

Director, Office of International Harmonization.

[FR Doc. 95–17732 Filed 7–18–95; 8:45 am]

BILLING CODE 4910–59–M

Research of Special Programs Administration

Grants and Denials of Applications for Exemptions

AGENCY: Research and Special Programs Administration, D.O.T.

ACTION: Notice of Grants and Denials of Applications for Exemptions.

SUMMARY: In accordance with the procedures governing the application for, and the processing of, exemptions from the Department of Transportation's Hazardous Materials Regulations (49 CFR Part 107, Subpart B), notice is hereby given of the exemptions granted in April thru June 1995. The modes of transportation involved are identified by a number in the ''Nature of Application'' portion of the table below as follows: 1—Motor vehicle, 2—Rail freight, 3—Cargo vessel, 4—Cargo aircraft only, 5—Passenger-carrying aircraft. Application numbers prefixed by the letters EE represent applications for Emergency Exemptions.

MODIFICATION AND PARTY TO EXEMPTIONS

Application No.	Exemption No.	Applicant	Regulation(s) affected	Nature of exemption thereof
3216	DOT–E 3216	DuPont de Nemours & Co., Inc., Wilmington, DE.	49 CFR 173.314(c)	Authorizes the use of a proposed DOT Specification 110A300W tank car tank for transportation of certain compressed gases (modes 1, 3).
3216–P	DOT–E 3216	Solkatronic Chemicals, Fairfield, NJ.	49 CFR 173.314(c)	To become a party to exemption 3216 (modes 1, 3).
4453–P	DOT–E 4453	Conex, Inc., Derby, IN	49 CFR 172.101, 173.114a(h)(3), 176.415, 176.83.	To become a party to exemption 4453 (modes 1, 2, 3).
5704–P	DOT–E 5704	Diablo Transportation, Inc., Byron, CA.	49 CFR 173.62, Packing Method E–103.	To become a party to exemption 5704 (modes 1, 2, 3).
5951–P	DOT–E 5951	DXI Industries, Inc., Houston, TX	49 CFR 173.314(c)	To become a party to exemption 5951 (modes 1, 2).
6563–X	DOT–E 6563	Mada Medical Products, Inc., Carlstadt, NJ.	49 CFR 173.302(a)(1), 175.3, 178.42–2.	To renew exemption to authorize the continued use of cylinders, constructed with welded tubing and longitudinal seams, for the use of materials classed as Division 2.2 with no new construction authorized (modes 1, 2, 3, 4).
6691–P	DOT–E 6691	Coastal Welding Supply, Inc., Beaumont, TX.	49 CFR 173.34(e)(15)(i), Part 107, Subpart B, Appendix B (2).	To become a party to exemption 6691 (modes 1, 2, 3, 4, 5).
6691–P	DOT–E 6691	C S Gases, Inc., Buffalo, NY	49 CFR 173.34(3)(15)(i), Part 107, Subpart B, Appendix B (2).	To become a party to exemption 6691 (modes 1, 2, 3, 4, 5).
6743–P	DOT–E 6743	Green Mountain Explosive, Inc., Auburn, NJ.	49 CFR 173.114a(h)(3), 173.182	To become a party to exemption 6743 (modes 1).
7648–P	DOT–E 7648	Great Western Aviation, Inc., Ogden, UT.	49 CFR 172.204(c), 172.300(a), 172.400(a), 173.91(a), 173.91(i), 175.3, 175.35(a).	To become a party to exemption 7648 (modes 4).

MODIFICATION AND PARTY TO EXEMPTIONS—Continued

Application No.	Exemption No.	Applicant	Regulation(s) affected	Nature of exemption thereof
7694–P	DOT–E 7694	E-Systems Montek Division, Van Nuys, CA.	49 CFR 173.302(a)(4), 175.3	To become a party to exemption 7694 (modes 1, 2, 4).
7765–P	DOT–E 7765	Carleton Technologies Inc., Orchard Park, NY.	49 CFR 173.302(a)(4), 175.3	To modify exemption to provide for cargo vessel as an additional mode of transportation for use in transporting nonrefillable, non-DOT specification cylinders containing Division 2.2 material (modes 1, 2, 4).
7835–P	DOT–E 7835	Environmental Products & Services, Inc., Syracuse, NY.	49 CFR 177.848(d)	To become a party to exemption 7835 (modes 1).
7887–P	DOT–E 7887	Kodson Enterprises of Ventura, CA, Fort Worth, TX.	49 CFR 172.101, 175.3, Part 107, portion of Appendix B.	To become a party to exemption 7887 (modes 1, 2, 3, 4, 5).
7891–X	DOT–E 7891	Sigma-Aldrich Corp., St. Louis, MO	49 CFR 172.400, 172.402(a)(2), 172.402(a)(3), 172.504 Table 1, 172.504(a), 173.126, 173.138, 173.237, 173.246, 173.25(a), 175.3.	To modify exemption to include materials required to be labeled SPONTANEOUSLY COMBUSTIBLE to be exempt from labeling and from certain segregation requirements when packaged in specially designed packagings (modes 1, 2).
8009–P	DOT–E 8009	Gas Trans, Austin, TX	49 CFR 173.301(d)(2), 173.302(a)(3), 178.37–5.	To become a party to exemption 8009 (mode 1).
8009–P	DOT–E 8009	Sonoma County Transit, Santa Rosa, CA.	49 CFR 173.301(d)(2), 173.302(a)(3), 178.37–5.	To become a party to exemption 8009 (mode 1).
8236–P	DOT–E 8236	Chrysler Corporation, Center Line, MI.	49 CFR 171.11 (see paragraph 8.d.), 173.153, 173.154, 175.3.	To become a party to exemption 8236 (modes 1, 2, 3, 4).
8445–P	DOT–E 8445	Specialty Systems Hazardous Waste, Inc., Indianapolis, IN.	49 CFR Part 173, Subparts D, E, F, H.	To become a party to exemption 8445 (mode 1).
8451–P	DOT–E 8451	Diablo Transportation, Inc., Byron, CA.	49 CFR 173.3, 173.54, 173.60, 174.3, 175.3, 177.801.	To become a party to exemption 8451 (modes 1, 2, 4).
8451–P	DOT–E 8451	California Advanced Environmental Technology Corp., Hayward, CA.	49 CFR 173.3, 173.54, 173.60, 174.3, 175.3, 177.801.	To become a party to exemption 8451 (modes 1, 2, 4).
8451–P	DOT–E 8451	Advanced Environmental Technology Corporation, Flanders, NJ.	49 CFR 173.3, 173.54, 173.60, 174.3, 175.3, 177.801.	To become a party to exemption 8451 (modes 1, 2, 4).
8451–P	DOT–E 8451	Breed Technologies, Inc., Lakeland, FL.	49 CFR 173.3, 173.54, 173.60, 174.3, 175.3, 177.801.	To become a party to exemption 8451 (modes 1, 2, 4).
8554–P	DOT–E 8554	Viking Explosives & Supply, Inc., Rosemount, MN.	49 CFR 173.114a, 173.154, 173.93.	To become a party to exemption 8554 (modes 1, 3).
8854–P	DOT–E 8554	Intermountain IRECO, Inc., Gillette, WY.	49 CFR 173.114a, 173.154, 173.93.	To become a party to exemption 8554 (modes 1, 3).
8554–P	DOT–E 8554	Southwest Energy, Inc., Tucson, AZ.	49 CFR 173.114a, 173.154, 173.93.	To become a party to exemption 8554 (modes 1, 3).
8915–P	DOT–E 8915	Liquid Carbonic Industries, Oak Brook, IL.	49 CFR 173.301(d), 173.302(a)(3)	To become a party to exemption 8915 (modes 1, 3).
8958–X	DOT–E 8958	AeroTech, Inc., Las Vegas, NV	49 CFR 172.101	To modify exemption to provide for the transportation in commerce of black powder pellets in UN4G boxes (modes 1, 2, 3).
8958–P	DOT–E 8958	AeroTech, Inc., Las Vegas, NV	49 CFR 172.101	To become a party to exemption 8958 (modes 1, 2, 3).
9157–X	DOT–E 9157	Matheson Gas Products, Secaucus, NJ.	49 CFR 173.314(c), 179.300–7	To modify exemption to authorize additional non-DOT specification multi-unit tank cars for use in transporting hydrogen sulfide, Division 2.3 (mode 1).
9222–P	DOT–E 9222	Clean Harbors Environmental Services, Inc., Quincy, MA.	49 CFR 173.154	To become a party to exemption 9222 (mode 1).
9248–P	DOT–E9248	Total Resources International, Walnut, CA.	49 CFR 173.156, 173.184	To become a party to exemption 9248 (modes 1, 2).
9275–P	DOT–E 9275	Gensia Laboratories, Ltd., Irvine, CA.	49 CFR Parts 100–199	To become a party to exemption 9275 (modes 1, 2, 3, 4, 5).
9275–P	DOT–E 9275	MEM Company, Inc., Northvale, NJ.	49 CFR Parts 100–199	To become a party to exemption 9275 (modes 1, 2, 3, 4, 5).
9346–P	DOT–E 9346	Consumers Power Co., Essexville, MI.	49 CFR 174.67(a)(2), Part 107, Subpart B, Appendix B.	To become a party to exemption 9346 (mode 2).

MODIFICATION AND PARTY TO EXEMPTIONS—Continued

Application No.	Exemption No.	Applicant	Regulation(s) affected	Nature of exemption thereof
9370–X	DOT–E 9370	Norris Cylinder Company, Longview, TX.	49 CFR 173.301, 173.302, 173.304, 175.3, 178.45.	To renew and modify the chemical composition of steel used for construction of non-DOT specification cylinders used for the transportation of flammable and nonflammable, liquefied and nonliquefied gases (modes 1, 2, 3, 4).
9421–X	DOT–E 9421	Taylor-Wharton Cylinders, Harrisburg, PA.	49 CFR 173.301(h), 173.302, 173.304, 173.34(a)(1), 175.3, 178.37.	To modify the exemption to provide for alternative testing of non-DOT specification cylinders for use in transporting various hazardous materials classed as Division 2.1, 2.2 and 6.1 (modes 1, 2, 3, 4).
9491–P	DOT–E 9491	BOC Gases, Riverton, NJ	49 CFR 173.302, 173.304	To become a party to exemption 9491 (modes 1, 2, 3, 4, 5).
9677–X	DOT–E 9677	Allied Universal Corporation, Miami, FL.	49 CFR 173.263(a)(15)	To modify exemption to provide for transportation of Class 8 material in non-DOT specification one-gallon bottles built to 2E standards over packed in DOT specification fiberboard boxes (mode 1).
9723–X	DOT–E 9723	Heritage Transport, Inc., Indianapolis, IN.	49 CFR 177.848	To modify exemption to provide for rail as an additional mode of transportation for use in transporting lab packs (modes 1, 2).
9723–P	DOT–E 9723	ETSS of Ohio, Inc., New Carlisle, OH.	49 CFR 177.848	To become a party to exemption 9723 (modes 1, 2).
9723–P	DOT–E 9723	Cyn Environmental Services, South Boston, MA.	49 CFR 177.848	To become a party to exemption 9723 (modes 1, 2).
9723–P	DOT–E 9723	Diablo Transportation, Inc., Byron, CA.	49 CFR 177.848	To become a party to exemption 9723 (modes 1, 2).
9723–P	DOT–E 9723	Environmental Options, Inc., Rocky Mount, VA.	49 CFR 177.848,	To become a party to exemption 9723 (modes 1, 2).
9769–P	DOT–E 9769	Diablo Transportation, Inc., Byron, CA.	49 CFR 173.12, 174.81, 176.83, 177.848.	To become a party to exemption 9769 (modes 1, 2, 3).
9769–P	DOT–E 9769	ENSCO, Inc. d/b/a Division Transport, Eldorado, AR.	49 CFR 173.12, 174.81, 176.83, 177.848.	To become a party to exemption 9769 (modes 1, 2, 3).
9769–P	DOT–E 9769	Clean Harbors Environmental Services, Inc., Quincy, MA.	49 CFR 173.12, 174.81, 176.83, 177.848.	To become a party to exemption 9769 (modes 1, 2, 3).
9779–P	DOT–E 9779	BJ Services Co., Houston, TX	49 CFR 173.119, 173.245, 178.253.	To become a party to exemption 9779 (mode 1).
9997–X	DOT–E 9997	Hodgdon Powder Company, Inc., Shawnee Mission, KS.	49 CFR 173.107, 173.87	Authorizes the transport of a kit containing smokeless powder for small arms, percussion caps and nonhazardous articles such as lead balls and bore cleaner, in non-DOT specification fiber boxes (mode 1).
9997–X	DOT–E 9997	Hodgdon Powder Company, Inc., Shawnee Mission, KS.	49 CFR 173.107, 173.87	Authorizes the transport of a kit containing smokeless powder for small arms, percussion caps and nonhazardous articles such as lead balls and bore cleaner, in non-DOT specification fiber boxes (mode 1).
10001–P	DOT–E 10001	Badger Welding Supplies, Inc., Madison, WI.	49 CFR 173.316, 173.320	To become a party to exemption 10001 (mode 1).
10001–P	DOT–E 10001	J.A. Cunningham Equipment, Inc., Philadelphia, PA.	49 CFR 173.316, 173.320	To become a party to exemption 10001 (mode 1).
10001–P	DOT–E 10001	Nordan Smith Welding Supplies, Hattiesburg, MS.	49 CFR 173.316, 173.320	To become a party to exemption 10001 (mode 1).
10184–P	DOT–E 10184	Liquid Carbonic Industries Corp., Oak Brook, IL.	49 CFR 173.34(e)(10), 173.34(e)(9).	To become a party to exemption 10184 (modes 1, 2, 3).
10239–P	DOT–E 10239	Cabot Corporation, Tuscola, IL	49 CFR 173.263, 179.200–18(b)	To become a party to exemption 10239 (mode 2).

MODIFICATION AND PARTY TO EXEMPTIONS—Continued

Application No.	Exemption No.	Applicant	Regulation(s) affected	Nature of exemption thereof
10288–X	DOT–E 10288	Air Products and Chemicals, Inc., Allentown, PA.	49 CFR 173.31(c), 179.101–1(a)	To modify exemption to provide for DOT Specification 105J300W, 112J340W, 112S340W and 112T340W tank cars for use in transporting Class 3 material (mode 2).
10323–X	DOT–E 10323	Solkatronic Chemicals, Inc., Fairfield, NJ.	49 CFR 173.119, 173.245, 173.302, 173.304, 173.328, 173.34, 173.346.	To modify the exemption to include cargo vessel and rail freight as additional modes of transportation (mode 1).
10340–X	DOT–E 10340	Schutz Werk GmbH & Co., Selters, West Germany.	49 CFR 173.118a, 173.119, 173.125, 173.245, 176.340, Part 173, Subpart F.	To exempt IBC's containing residue of various classes of hazardous materials from the shipping paper requirements and provide for one-inch markings (modes 1, 2, 3).
10429–X	DOT–E 10429	Nalco Chemical Company, Naperville, IL.	49 CFR 177.834(h), Part 107 appendix (B)(1), Part 173 Subparts D and F.	To modify exemption to authorize transportation of Class 3, 8 and Division 5.2 material in DOT specification 31A IBCs to be unloaded without being removed from the vehicle (mode 1).
10440–P	DOT–E 10440	McDonnell Douglas Aerospace, Mesa, AZ.	49 CFR 173.304(a)(1), 175.3, 178.47.	To become a party to exemption 10440 (modes 1, 2, 4, 5).
10441–P	DOT–E 10441	SET Environmental, Inc., Wheeling, IL.	49 CFR 173.12(b)(6), 177.848(b)	To become a party to exemption 10441 (mode 1).
10441–P	DOT–E 10441	Laidlaw Environmental Services, Inc., Columbia, SC.	49 CFR 173.12(b)(6), 177.848(b)	To become a party to exemption 10441 (mode 1).
10441–P	DOT–E 10441	Enviro-Chem Environmental Services, Inc., Apex, NC.	49 CFR 173.12(b)(6), 177.848(b)	To become a party to exemption 10441 (mode 1).
10441–P	DOT–E 10441	Environmental Products & Services, Inc., Syracuse, NY.	49 CFR 173.12(b)(6), 177.848(b)	To become a party to exemption 10441 (mode 1).
10589–X	DOT–E 10589	Monsanto, St. Louis, MO	49 CFR 173.31(c)(3)	To modify the exemption to provide for various changes to Packaging(s) and Safety Control Measures Under Item 7 (mode 2).
10709–P	DOT–E 10709	Mariah Corporation, Broussard, LA	49 CFR 173.119(m)	To become a party to exemption 10709 (modes 1, 3).
10802–P	DOT–E 10802	BOC Gases, Riverton, NJ	49 CFR 173.302(f)	To become a party to exemption 10802 (modes 1, 2, 4).
10933–P	DOT–E 10933	SET Environmental, Inc., Wheeling, IL.	49 CFR 173.12, 174.81, 176.83 and 177.848.	To become a party to exemption 10933 (modes 1, 2, 3).
10933–P	DOT–E 10933	Diablo Transportation, Inc., Byron, CA.	49 CFR 173.12, 174.81, 176.83 and 177.848.	To become a party to exemption 10933 (modes 1, 2, 3).
10933–P	DOT–E 10933	Aptus, Inc., Lakeville, MN	49 CFR 173.12, 174.81, 176.83 and 177.848.	To become a party to exemption 10933 (modes 1, 2, 3).
10949–P	DOT–E 10949	Clean Harbors Environmental Services, Inc., Quincy, MA.	49 CFR 177.848(d)	To become a party to exemption 10949 (mode 2).
10963–P	DOT–E 10963	SGL Carbon Group, Union, NJ	49 CFR 173.119, 173.304, 173.327, 173.328, 173.34, 173.346.	To modify exemption to provide for the transportation of Chlorosilanes, Division 4.3, in non-DOT specification fully-removable head carbon steel salvage cylinder of welded construction (mode 2).
10970–P	DOT–E 10970	Luxfer USA Limited, Placentia, CA	49 CFR 173.302(a)(1), 173.304(a)(d), 175.3.	To modify exemption to increase water capacity to 200 pounds and the service pressure to 5000 psi for aluminum-lined composite cylinders meeting the design and qualification requirements of DOT FRP–1 standard for use in transporting various commodities classed as Division 2.1 and 2.2 (modes 1, 2, 3, 4, 5).

MODIFICATION AND PARTY TO EXEMPTIONS—Continued

Application No.	Exemption No.	Applicant	Regulation(s) affected	Nature of exemption thereof
10977–X	DOT–E 10977	Federal Industries Corporation, Newport, MN.	49 CFR 172.402(a)(2), 172.504(a) and Table 1, 173.25(a), 173.3, 175.3, 49 CFR 172.400.	To modify exemption to provide for passenger aircraft as an additional mode of transportation for transporting various classes of hazardous materials in specially designed packaging (modes 1, 2, 4).
10979–P	DOT–E 10979	Chem-Way Corporation, Charlotte, NC.	49 CFR 173.243	To become a party to exemption 10979 (mode 1).
10979–P	DOT–E 10979	Tri-State Chemical Co., Lyman, SC	49 CFR 173.243	To become a party to exemption 10979 (mode 1).
10979–P	DOT–E 10979	Southchem, Inc., Durham, NC	49 CFR 173.243	To become a party to exemption 10979 (mode 1).
10987–P	DOT–E 10987	BOC Gases, Murray Hill, NJ	49 CFR 173.201, 173.202, 173.203, 173.302(a)(1), 173.304(a)(2), 173.34 (d) and (e).	To become a party to exemption 10987 (mode 1).
11000–P	DOT–E 11000	E.I. DuPont de Nemours & Company, Inc., Wilmington, DE.	49 CFR 173.314 Table	To become a party to exemption 11000 (mode 2).
11043–P	DOT–E 11043	Franklin Environmental Services, Inc., Wrentham, MA.	49 CFR 177.848	To become a party to exemption 11043 (mode 1).
11043–P	DOT–E 11043	J.B. Hunt Special Commodities, Inc., Lowell, AR.	49 CFR 177.848	To become a party to exemption 11043 (mode 1).
11043–P	DOT–E 11043	S&W Waste, Inc., South Kearny, NJ.	49 CFR 177.848	To become a party to exemption 11043 (mode 1).
11043–P	DOT–E 11043	SET Environmental, Inc., Wheeling, IL.	49 CFR 177.848	To become a party to exemption 11043 (mode 1).
11055–P	DOT–E 11055	Clean Harbors Environmental Services, Inc., Quincy, MA.	49 CFR 173.226, 174.81, 176.83, 177.848, Part 172, Subpart E.	To become a party to exemption 11055 (modes 1, 2, 3).
11055–P	DOT–E 11055	Environmental Products & Services, Inc., Syracuse, NY.	49 CFR 173.226, 174.81, 176.83, 177.848, Part 172, Subpart E.	To become a party to exemption 11055 (modes 1, 2, 3).
11055–P	DOT–E 11055	Aptus, Inc., Lakeville, MN	49 CFR 173.226, 174.81, 176.83, 177.848, Part 172, Subpart E.	To become a party to exemption 11055 (modes 1, 2, 3).
11156–P	DOT–E 11156	Dole Explosives, Inc., Rosemount, MN.	49 CFR 173.212(b), 173.62	To become a party to exemption 11156 (mode 1).
11156–P	DOT–E 11156	Olson Explosives, Inc., Decorah, IA.	49 CFR 173.212(b), 173.62	To become a party to exemption 11156 (mode 1).
11173–P	DOT–E 11173	Lockheed Missiles & Space Co., Sunnyvale, CA.	49 CFR 173.227, 173.201, 173.226, 178.61–11, 178.61–20, 178.61–5, 178.61–8(b).	To become a party to exemption 11173 (modes 1, 2, 3, 4, 5).
11197–P	DOT–E 11197	Nalco/Exxon Energy Chemicals LP, Sugar Land, TX.	49 CFR 172.312, Part 172, Subparts C and D.	To become a party to exemption 11197 (mode 1).
11197–P	DOT–E 11197	Fisher Scientific Company, Pittsburgh, PA.	49 CFR 172.312, Part 172, Subparts C and D.	To become a party to exemption 11197 (mode 1).
11197–P	DOT–E 11197	Betz Laboratories, Inc., Trevose, PA.	49 CFR 172.312, Part 172, Subparts C and D.	To become a party to exemption 11197 (mode 1).
11197–P	DOT–E 11197	Pace International LP, Kirkland, WA.	49 CFR 172.312, Part 172, Subparts C and D.	To become a party to exemption 11197 (mode 1).
11200–P	DOT–E 11200	Hughes Space and Communications Company, Los Angeles, CA.	49 CFR 173.31(a)(4) and 179.300–15.	To become a party to exemption 11200 (modes 1, 3).
11220–P	DOT–E 11220	Environmental Products & Services, Inc., Syracuse, NY.	49 CFR 172.301(c), 173.28(b)(2), Part 107, Subpart B, Appendix B.	To become a party to exemption 11220 (modes 1, 2, 3).
11230–P	DOT–E 11230	ICI Explosives USA, Inc., Dallas, TX.	49 CFR 173.62(c) Packing Method US004, 177.835(g)(3)(i), 177.848(f) Table.	To become a party to exemption 11230 (mode 1).
11230–P	DOT–E 11230	Intermountain IRECO, Inc., Gillette, WY.	49 CFR 173.62(c) Packing Method US004, 177.835(g)(3)(i), 177.848(f) Table.	To become a party to exemption 11230 (mode 1).
11230–P	DOT–E 11230	Conex, Inc., Derby, IN	49 CFR 173.62(c) Packing Method US004, 177.835(g)(3)(i), 177.848(f) Table.	To become a party to exemption 11230 (mode 1).
11230–P	DOT–E 11230	Dama, Inc., Roanoke, VA	49 CFR 173.62(c) Packing Method US004, 177.835(g)(3)(i), 177.848(f) Table.	To become a party to exemption 11230 (mode 1).
11230–P	DOT–E 11230	IRECO of Florida, Inc., Miramar, FL.	49 CFR 173.62(c) Packing Method US004, 177.835(G)(3)(I), 177.848(f) Table.	To become a party to exemption 11230 (mode 1).
11230–P	DOT–E 11230	Winchester Building Supply Co., Inc., Winchester, VA.	49 CFR 173.62(c) Packing Method US004, 177.835(g)(3)(i), 177.848(f) Table.	To become a party to exemption 11230 (mode 1).

MODIFICATION AND PARTY TO EXEMPTIONS—Continued

Application No.	Exemption No.	Applicant	Regulation(s) affected	Nature of exemption thereof
11230–P	DOT–E 11230	W.H. Burt Explosives, Inc., Moab, UT.	49 CFR 173.62(c) Packing Method US004, 177.835(g)(3)(i), 177.848(f) Table.	To become a party to exemption 11230 (mode 1).
11230–P	DOT–E 11230	Buckley Power Co. of Oklahoma, Inc., Mill Creek, OK.	49 CFR 173.62(c) Packing Method US004, 177.835(g)(3)(i), 177.848(f) Table.	To become a party to exemption 11230 (mode 1).
11230–P	DOT–E 11230	St. Lawrence Explosives Corp., Adams Center, NY.	49 CFR 173.62(c) Packing Method US004, 177.835(g)(3)(i), 177.848(f) Table.	To become a party to exemption 11230 (mode 1).
11230–P	DOT–E 11230	Boren Companies, Inc., Birmingham, AL.	49 CFR 173.62(c) Packing Method US004, 177.835(g)(3)(i), 177.848(f) Table.	To become a party to exemption 11230 (mode 1).
11230–P	DOT–E 11230	Cherokee Explosives, Inc., Plainville, CT.	49 CFR 173.62(c) Packing Method US004, 177.835(g)(3)(i), 177.848(f) Table.	To become a party to exemption 11230 (mode 1).
11230–P	DOT–E 11230	Econex North, Inc., Standish, MI ...	49 CFR 173.62(c) Packing Method US004, 177.835(g)(3)(i), 177.848(f) Table.	To become a party to exemption 11230 (mode 1)
11230–P	DOT–E 11230	ECONEX, Inc., Pittsfield, IL	49 CFR 173.62(c) Packing Method US004, 177.835(g)(3)(i), 177.848(f) Table.	To become a party to exemption 11230 (mode 1)
11230–P	DOT–E 11230	Binns, & Stevens Explosives, Inc., Oskaloosa, IA.	49 CFR 173.62(c) Packing Method US004, 177.835(g)(3)(i), 177.848(f) Table.	To become a party to exemption 11230 (mode 1)
11230–P	DOT–E 11230	Alaska-Pacific Powder Co., Olympia, WA.	49 CFR 173.62(c) Packing Method US004, 177.835(g)(3)(i), 177.848(f) Table.	To become a party to exemption 11230 (mode 1)
11230–P	DOT–E 11230	Buckley Powder Co., Englewood, CO.	49 CFR 173.62(c) Packing Method US004, 177.835(g)(3)(i), 177.848(f) Table.	To become a party to exemption 11230 (mode 1)
11254–P	DOT–E 11254	Directional Wireline Services, Inc., Lake Charles, LA.	49 CFR 173.62(c) Packing Method US006.	To become a party to exemption 11254 (mode 3).
11254–P	DOT–E 11254	Apex Wireline, Inc., Houma, LA	49 CFR 173.62(c) Packing Method US006.	To become a party to exemption 11254 (mode 3).
11294–P	DOT–E 11294	S&W Waste, Inc., South Kearny, NJ.	49 CFR 177.848	To become a party to exemption 11294 (mode 1)
11321–X	DOT–E 11321	E.I. du Pont de Nemours & Company, Inc., Wilmington, DE.	49 CFR 172.101 Column 7 Special Provision B14 and T38.	To modify exemption to provide for rail and cargo vessel as additional modes of transportation for use in transporting Division 6.1 material in uninsulated DOT Specification cargo tanks and portable tanks (mode 1)
11353–P	DOT–E 11353	Cenes Supply and Marketing, Vancouver, WA.	49 CFR 172.101 Column 7 Special Provision B14.	To become a party to exemption 11353 (mode 1)
11353–P	DOT–E 11353	Farmers Supply Cooperative, Ontario, OR.	49 CFR 172.101 Column 7 Special Provision B14.	To become a party to exemption 11353 (mode 1)
11353–P	DOT–E 11353	Nexus Ag Chemicals, Inc., Quincy, WA.	49 CFR 172.101 Column 7 Special Provision B14.	To become a party to exemption 11353 (mode 1)
11356–P	DOT–E 11356	Ashland Chemical Company, Columbus, OH.	49 CFR 173.121(b)(1)(iii)	To become a party to exemption 11356 (mode 1)

NEW EXEMPTIONS

Application No.	Exemption No.	Applicant	Regulation(s) affected	Nature of exemption thereof
10927–N	DOT–E 10927	Hoechst Celanese Corporation, Pampa, TX.	49 CFR 173.31(b) (1) and (2)	To authorize tank cars loading when equipped with an auxiliary bottom outlet valve and the temporary application of valves installed on the interior heater coils (mode 2).

NEW EXEMPTIONS—Continued

Application No.	Exemption No.	Applicant	Regulation(s) affected	Nature of exemption thereof
10929–N	DOT–E 10929	Consolidated Rail Corporation, Philadelphia, PA.	49 CFR 174.67 (i) and (j)	To authorize tank cars, containing various hazardous materials to remain standing with unloading connections attached when no product is being transferred, provided that a minimal level of monitoring, as specified is maintained (mode 2).
10985–N	DOT–E 10985	Georgia-Pacific Corporation, Bellingham, WA.	49 CFR 174.67 (i) and (j)	To authorize tank cars, containing chlorine, to remain standing with unloading connections attached when no product is being transferred, provided that a minimal level of monitoring, as specified is maintained (mode 2).
11003–N	DOT–E 11003	Air Products and Chemicals, Inc., Allentown, PA.		To authorize the manufacture, marking and sale of a DOT Specification 4L cylinder to be used for the transportation of methane, refrigerated liquid, Division 2.1 (mode 1).
11074–N	DOT–E 11074	Interplastic Corporation, St. Paul, MN.	49 CFR 174.67 (i) and (j)	To authorize tank cars, containing dicyclopentadiene, Class 3, to remain standing with unloading connections attached when no product is being transferred, provided that a minimal level of monitoring, as specified is maintained (mode 2).
11199–N	DOT–E 11199	Dexsil Corporation, Hamden, CT	49 CFR 173.4	To authorize transportation of very small quantities of a Division 4.3 material, sodium metal dispersions—UN1391, in specifically designed packagings to be shipped under the provisions of Section 173.4 (modes 1, 2, 3, 4, 5).
11211–N	DOT–E 11211	Citergaz SA, Civray, France	49 CFR 178.245–1(b)	To authorize the manufacture, marking and sale of non-DOT specification portable tanks comparable to DOT Specification 51 except for the location of the openings to be used for the transportation of certain compressed gases (modes 1, 2, 3).
11230–N	DOT–E 11230	Dyno Nobel, Inc., Salt Lake City, UT.	49 CFR 173.62(c) Packing Method US004, 177.835(g)(3)(i), 177.848(f) Table.	To authorize the transportation of certain Division 1.1B and 1.4B non-electric detonator assemblies without packagings in the same motor vehicle with Division 1.1D and/or 1.5D explosives and/or Division 5.1 oxidizers when those detonator assemblies are placed within the partitioned IME Safety Library Publication No. 22 containers or compartments (mode 1).
11244–N	DOT–E 11244	Aerospace Design & Development, Inc., Niwot, CO.	49 CFR 173.316(c), 178.57	To authorize the manufacture, marking and sale of non-DOT specification titanium alloy cylinders for the transportation of air, refrigerated liquid (mode 1).
11256–N	DOT–E 11256	Great Lakes Chemical Corporation, McFarland, CA.	49 CFR 174.67(i) and (j)	To authorize tank cars containing hazardous materials, Class 2.3 and 6.1, to remain standing with unloading connections attached when no product is being transferred, provided that a minimal level of monitoring, as specified is maintained (mode 2).

NEW EXEMPTIONS—Continued

Application No.	Exemption No.	Applicant	Regulation(s) affected	Nature of exemption thereof
11288–N	DOT–E 11288	Intercontinental Packaging Corporation, Tuckahoe, NY.	49 CFR 173.306(a)(3)(v), 178.33a–2 and 8.	To authorize the manufacture, marking, and sale of non-DOT specification non-refillable metal aerosol container filled with propellant gas and in inner commodity pouch that is empty or contains a non-hazardous material (modes 1, 2, 3, 4, 5).
11298–N	DOT–E 11298	Reilly Industries, Inc., Indianapolis, IN.	49 CFR 174.67(i) and (j)	To authorize tank cars, containing hazardous materials, to remain standing with unloading connections attached when no product is being transferred, provided that a minimal level of monitoring, as specified is maintained (mode 2).
11299–N	DOT–E 11299	Minnesota Valley Engineering, Inc., Bloomington, MN.	49 CFR 173.304(a)(1), 178.57	To authorize the manufacture, marking and sale of non-DOT specification insulated cylinders for the transportation of refrigerated liquids (modes 1, 2, 3, 4).
11306–N	DOT–E 11306	Trinity River Authority of Texas, Grand Prairie, TX.	49 CFR 174.67(i) and (j)	To authorize tank cars, containing chlorine, to remain standing with unloading connections attached when no product is being transferred, provided that minimal level of monitoring, as specified is maintained (mode 2).
11314–N	DOT–E 11314	Bleachmasters—Division of Burris Chemical, Inc., Charleston, SC.	49 CFR 174.67(i) and (j)	To authorize tank cars, containing chlorine, to remain standing with unloading connections attached when no product is being transferred, provided that a minimal level of monitoring, as specified is maintained (mode 2).
11320–N	DOT–E 11320	AgrEvo USA Co., North Muskegon, MI.	49 CFR 174.67(i) and (j)	To authorize tank cars, containing chlorine, to remain standing with unloading connections attached when no product is being transferred, provided that a minimal level of monitoring, as specified is maintained (mode 2).
11323–N	DOT–E 11323	McDowell Manufacturing Co., Dubois, PA.	49 CFR 173.302(a)(4), 173.304(a)(1), 175.3, 178.65–14(b)(i), 178.65–5(a)(4), 178.65–6.	To authorize the manufacture, marking and sale of non-DOT specification cylinders for the transportation of certain hazardous materials (modes 1, 2, 3, 4, 5).
11326–N	DOT–E 11326	Composite Center, Inc., Haslet, TX	49 CFR 173.302(a) and (d), 173.302(a)(1), 175.3.	To authorize the manufacture, marking and sale of non-DOT specification, FRP–1 type cylinder to be used for the transportation of certain Division 2.1 and 2.2 gases (modes 1, 2, 3, 4, 5).
11329–N	DOT–E 11329	Degesch America, Inc., Weyers Cave, VA.	49 CFR 172.500, 172.504, 172.506.	To authorize transportation of an aluminum phosphide based fumigant/insecticide. The aluminum phosphide pesticide must be shipped in a limited number of specially designed containers transported by private motor vehicle. The motor vehicles used under the terms of the exemption are not required to be placarded (mode 1).

NEW EXEMPTIONS—Continued

Application No.	Exemption No.	Applicant	Regulation(s) affected	Nature of exemption thereof
11342–N	DOT–E 11342	Midland Fumigant Co., Inc., Leavenworth, KS.	49 CFR 172.500, 172.504, 172.506.	To authorize transportation of aluminum phosphide based fumigant/insecticide. The aluminum phosphide mixture must be shipped in a limited number of specially designed containers transported by private motor vehicle. The motor vehicles used under the terms of the exemption are not required to be placarded (mode 1).
11344–N	DOT–E 11344	Dupont Co., Wilmington, DE	49 CFR 174.67 (i) and (j)	To authorize tank cars, containing Class 8 material, to remain standing with unloading connections attached when no product is being transferred, provided that a minimal level of monitoring, as specified is maintained (mode 2).
11345–N	DOT–E 11345	Kaiser Compositek, Inc., Brea, CA	49 CFR 173.302(a)(1), 173.34, 175.3, 178.46.	To authorize the manufacture, marking and sale of a non-DOT specification, fiber reinforced plastic (FRP) full composite (FC) cylinder to be used for the transportation of certain Division 2.1 and 2.2 gases (modes 1, 2, 3, 4, 5).
11333–N	DOT–E 11348	Engelhard Corporation, Carteret, NJ.	49 CFR 173.421(d), 173.421–1(a), 173.421–2(c).	To authorize packagings of rhenium metal and alloys containing rhenium to be transported as ''limited quantity'' radioactive materials without prescribed marking requirements and certification statements (modes 1, 4, 5).
11351–N	DOT–E 11351	City of Houston, Houston, TX	49 CFR 174.67 (i) and (j)	To authorize tank cars, containing chlorine, to remain standing with unloading connections attached when no product is being transferred, provided that a minimal level of monitoring, as specified is maintained (mode 2).
11352–N	DOT–E 11352	Pepsico Puerto Rico, Inc., San Juan, PR.	49 CFR 172.200, 172.300, 172.400, 172.500.	To authorize transportation of certain hazardous materials across a public road, from one part of a plant to another, as essentially not subject to the hazard communication requirements in Part 172 (mode 1).
11353–N	DOT–E 11353	J.R. Simplot Co., et al., Pocatello, ID.	49 CFR 172.101 Column 7 Special Provision B14.	To authorize transportation of uninsulated DOT Specification cargo tanks containing a Division 6.1 material which is poisonous by inhalation (mode 1).
11359–N	DOT–E 11359	Hach Co., Ames, IA	49 CFR 173.4	To authorize transportation of small quantities (30 grams or less) of sodium dithionite, Division 4.2—PG II) in accordance with Section 173.4 (modes 1, 4, 5).
11360–N	DOT–E 11360	Space Systems/Loral, Palo Alto, CA.	49 CFR 173.302(a), 173.34(d), 175.3.	To authorize transportation of certain non-DOT specification pressure vessels containing compressed hydrogen, which are a component party of nickel-hydrogen battery (mode 4).

NEW EXEMPTIONS—Continued

Application No.	Exemption No.	Applicant	Regulation(s) affected	Nature of exemption thereof
11372–N	DOT–E 11372	Amerex Corp., Trussville, AL	49 CFR 173.34(e)(1)(iii)	To authorize an alternate method of marking hydrostatic test data on 4B, 4BW, and 4B240ET cylinders used as fire extinguishers (modes 1, 2, 3, 4, 5).
11374–N	DOT–E 11374	J.T. Baker, Inc., Phillipsburg, NJ	48 CFR 173.158(e)	To authorize transportation of nitric acid of up to 72% concentration in inner teflon bottles overpacked in UN4G fiberboard boxes (modes 1, 2, 3, 4).
11384–N	DOT–E 11384	Eagle-Picher Industries, Inc., Joplin, MO.	49 CFR 173.302(a), 173.34(d), 175.3.	To authorize transportation of certain non-DOT specification pressure vessels containing compressed hydrogen, which are a component part of a nickel-hydrogen battery (modes 1, 4).
11385–N	DOT–E 11385	AirTime Aviation, Houston, TX	49 CFR 171.11, 172.101, 172.204(c)(3), 173.27, 175.30(a)(1), 175.320(b), Part 107, Appendix B.	To authorize the transportation of Division 1.1, 1.2, 1.3 and 1.4 explosives which are forbidden or exceed quantities authorized for transportation by cargo aircraft only (modes 4, 5).
11386–N	DOT–E 11386	Beaver Island Boat Co., Charlevoix, MI.	49 CFR 172.101(10) Note (k)(4)	To authorize the transportation of certain liquefied petroleum gases and acetylene, contained in DOT Specification cylinders, on board passenger ferry vessels, which are carrying more than 25 passengers (mode 3).
9894–N	DOT–E 11407	International Safety Instruments, Inc., Lawrenceville, GA.	49 CFR 173.302(a)(1), 175.3	To authorize the transportation of non-DOT specification cylinders to be used in underwater breathing apparatus, containing various 2.2 gases (modes 1, 2, 3, 4, 5).
11414–N	DOT–E 11414	FIBA Compressed Gas Equipment, Westboro, MA.	49 CFR 173.304(a)(2)	To authorize the manufacture, marking and sale of DOT Specification 3AAX cylinders that are manifolded and assembled in an ISO container frame for the transportation of perfluoromethyl vinyl ether (PMVE), a Division 2.1 material (modes 1, 3).
11430–N	DOT–E 11430	Sachs Automotive of America, Troy, MI.		To authorize the manufacture, mark and sale of certain shock absorbers and struts for transportation as accumulators (modes 1, 2, 3, 4, 5).
11439–N	DOT–E 11439	National Aeronautics and Space Administration, Washington, DC.	49 CFR 173.304(d), 173.34(a)(1)	To authorize the one-time shipment of an x-ray timing explorer (XTE) satellite which contains propane, a Division 2.1 material, in non-DOT specification containers (modes 1, 4).

EMERGENCY EXEMPTIONS

Application No.	Exemption No.	Applicant	Regulation(s) affected	Nature of exemption thereof
EE 5923–X	DOT–E 5923	Parry Corp. (formerly Akron Welding & Spring Co.), North Royalton, OH.	49 CFR 173.148(a)(4), 173.31(d)(9), 173.314.	Authorizes the transport of certain flammable and nonflammable gases in DOT–106A500X and 110A500W multi-unit tank cars (modes 1, 2, 3).
EE 5945–X	DOT–E 5945	Cardox Division of Liquid Air Corporation, Walnut Creek, CA.	49 CFR 173.315, 178.245	Authorizes the use of a small capacity DOT–51 portable tank for shipment of a nonflammable compressed gas (mode 1).

EMERGENCY EXEMPTIONS—Continued

Application No.	Exemption No.	Applicant	Regulation(s) affected	Nature of exemption thereof
EE 6530–X	DOT–E 6530	Parry Corporation, North Royalton, OH.	49 CFR 173.302(c)	Authorizes the shipment of hydrogen and mixtures of hydrogen with helium, argon or nitrogen in DOT Specification 3A, 3AA, 3AX, or 3AAX steel cylinders (modes 1, 2).
EE 6691–X	DOT–E 6691	Parry Corporation, North Royalton, OH.	49 CFR 173.34(e)(15)(i), Part 107, Subpart B, Appendix B (2).	Authorizes the use of DOT Specification 3A, or 3AA cylinders over 35 years old, which can be retested every 10 years, for transportation of certain flammable and nonflammable gases (modes 1, 2, 3, 4, 5).
EE 8156–X	DOT–E 8156	Parry Corporation, North Royalton, OH.	49 CFR 173.121, 173.302(a)(4), 173.302(f), 173.304(a)(1).	Authorizes the shipment of flammable gases in DOT Specification 39 cylinders up to 225 cubic inches in volume (modes 1, 2).
EE 8723–X	DOT–E 8723	Mt. State Bit Service, Inc., Morgantown, WV.	49 CFR 172.101, 173.114a(h)(3), 173.154, 176.415, 176.83.	Authorizes the use of non-DOT specification motor vehicles for bulk shipment of certain blasting agents (modes 1, 2).
EE 8811–X	DOT–E 8811	Hoechst Celanese Corporation, Charlotte, NC.	49 CFR 173.294, 178.340–3, 178.343–2.	Authorizes the use of modified DOT Specification MC–312 cargo tanks made of titanium for shipment of certain corrosive materials (mode 1).
EE 9047–X	DOT–E 9047	Parry Corporation, North Royalton, OH.	49 CFR 173.124(a)(2), 173.124(a)(4), 175.3.	Authorizes the use of copper-bearing (brass) valves in DOT specification cylinders and DOT Specification 5P drums containing ethylene oxide (modes 1, 2, 3, 4).
EE 9248–P	DOT–E 9248	Total Resources International, Walnut Creek, CA.	49 CFR 173.156, 173.184	To become a party to exemption 9248 (modes 1, 2).
EE 10001–X ...	DOT–E 10001	Parry Corporation, North Royalton, OH.	49 CFR 173.316, 173.320	Authorizes the transport of argon containing up to 10 percent oxygen as a refrigerated liquid in DOT Specification 4L cylinder (mode 1).
EE 10184–X ...	DOT–E 10184	Parry Corporation, North Royalton, OH.	49 CFR 173.34(e)(10), 173.34(e)(9).	Authorizes the shipment of a specific gas mixture in DOT Specification 4B, 4BA, or 4BW cylinders retested in accordance with the provisions of 49 CFR 173.34 (e)(9) and (e)(10) (modes 1, 2, 3).
EE 11162–X ...	DOT–E 11162	Gabriel Chemicals, Inc., Houston, TX.	49 CFR 172.102, Special Provision B74 and 173.244(a).	Authorizes the shipment of a Class 8 material meeting the definition of a poison inhalation material, in certain DOT Specification 111A60W7 tank cars (mode 2).
EE 11353–P ...	DOT–E 11353	Quincy Farm Chemicals, Inc., Quincy, WA.	49 CFR 172.101, Column 7, Special Provision B14.	To become a party to exemption 11353 (mode 1).
EE 11369–P ...	DOT–E 11369	Sun Co., Inc., Philadelphia, PA	49 CFR 173.31(c)(9)	To modify exemption originally issued on an emergency basis for the use of petroleum oil for the hydrostatic test of certain DOT Specification 111A100W1 tank cars (mode 2).
EE 11438–N ...	DOT–E 11438	Allied-Signal Safety Restraint Systems, Sterling Hghts., MI.	49 CFR 173.51(a), 173.56	To authorize the emergency transportation in commerce of seatbelt restraints that have not been tested in accordance with Sec. 173.56 (modes 1, 4).
EE 11445–N ...	DOT–E 11445	Piedmont Explosives, Inc., Statesville, NC.	49 CFR 172.320, and Subpart M, 173.56, 173.62.	To authorize the emergency transportation of Explosives, blasting Type E, 1.1D and 1.5D in five-inch diameter 5H3 woven plastic bags (mode 1).

EMERGENCY EXEMPTIONS—Continued

Application No.	Exemption No.	Applicant	Regulation(s) affected	Nature of exemption thereof
EE 11446–N	DOT–E 11446	Foster Wheeler Environmental Corp., Bridgeport, NJ.	49 CFR 173.227	To authorize the emergency transportation of sulphuric acid, fuming, Class 8, in non-DOT 55 gallon steel drums overpacked in DOT specified packaging (mode 1).
EE 11446–X	DOT–E 11446	Foster Wheeler Environmental Corp., Bridgeport, NJ.	49 CFR 173.227	To authorize the emergency transportation of sulphuric acid, fuming, Class 8, in non-DOT 55 gallon steel drums overpacked in DOT specified packaging (mode 1).
EE 11452–N	DOT–E 11452	Dept. of the Army, Falls Church, VA.	49 CFR 173.301(h), 173.302(a)(1)(2), 175.3.	To authorize the emergency transportation of non-DOT specification cylinders comparable to military specification MIL–R–8573 for use in transporting non-flammable gases (mode 4).
EE 11456–N.	DOT–E 11456	PPG Industries	49 CFR 173.29(a)	To authorize the emergency transportation of a rail car with broken relief valve with cap (mode 2).
EE 11460–N.	DOT–E 11460	AlliedSignal Inc., Morristown, NJ	49 CFR 171.102	To authorize the emergency transportation of compressed gases, flammable, toxic, n.o.s. (Tricfluorochlotoethylene) 2.3, Zone C is an uninsulated DOT-Specification 331 (mode 1).
EE 11461–N.	DOT–E 11461	Merichem		To authorize the emergency transportation of two DOT 111A100W1 tank cars containing Class 3 material with heater coil capped (mode 2).
EE 11462–N.	DOT–E 11462	Sun Oil Co.	49 CFR 1111, 123	To authorize the emergency transportation of two rail cars containing Class 3 material with heater coil capped (mode 2).
EE 11463–N.	DOT–E 11463	Consolidated Rail Corp., Philadelphia, PA.	49 CFR 173.31(a), 173.314(c), 179.105–4.	To offer a DOT-Specification 105A500W tank car, ACFX 85386, meeting all DOT specification requirements except that the tank car is not equipped with a complete thermal protection system due to a derailment (mode 2).
EE 11479–N.	DOT–E 11479	PCS Phosphate, Aurora, NC	49 CFR 173.31(a), 174.3, 174.67 (j) & (k).	To authorize the emergency transportation of DOT-Specification tank car with a defective liquid line valve (mode 2).

WITHDRAWAL EXEMPTIONS

Application No.	Applicant	Regulation(s) affected	Nature of exemption thereof
6418–X	Coastal Chemical Corporation, Greenville, NC.	49 CFR 173.357(b)	Authorizes the use of DOT Specification MC–303, MC–304, MC–306, MC–307, MC–310, or MC–312 steel cargo tanks for transportation of Class B poisonous liquids (mode 1).
8878–X	Amalgamet Canada—Division of Premetalco, Inc., Toronto, Ontario, Canada.	49 CFR 173.245	To authorize shipment of germanium tetrachloride, corrosive liquid, n.o.s., in glass containers of less than 3 gallon capacity, surrounded by vermiculite placed in a cylindrical steel overpack, packed six to a compartmented wooden box (modes 1, 3).
9184–X	The Carbide/Graphite Group, Inc., Louisville, KY.	49 CFR 173.178	Authorizes the shipment of calcium carbide and substances which in contact with water emit flammable gases, solid n.o.s. (strontium aluminate), in polyethylene-lined woven polypropylene collapsible bags in truckload or carload lots only (modes 1, 2).

WITHDRAWAL EXEMPTIONS—Continued

Application No.	Applicant	Regulation(s) affected	Nature of exemption thereof
9802–X	McNeely Charter Service, Inc., West Memphis, AR.	49 CFR 172.101, 172.204(c)(3), 173.27, 175.30(a)(1), 175.320(b), Part 107, Appendix B.	Authorizes the carriage of certain Class A, B and C explosives that are not permitted for shipment by air, or are in quantities greater than those prescribed for shipment by air (mode 4).
10227–X	Caire, Inc., Bloomington, MN	49 CFR 173.316, 175.3, 178.57(8)(b), 178.57–2, 178.57–8(c).	Authorizes the manufacture, marking, and sale of insulated non-DOT specification cylinders for shipments of liquid oxygen (modes 1, 4).
10323–P	Airco Special Gases, Riverton, NJ.	49 CFR 173.119, 173.245, 173.302, 173.304, 173.328. 173.34, 173.346.	To become a party to exemption 10323 (mode 1).
10415–N	National Aeronautics and Space Administration, Washington, DC.	49 CFR 178.37–10(b), 178.37–12(c), 178.37–5(a).	To authorize use of non-DOT specification high pressure gas trailer configuration manufactured from AISI 4340 steel with service pressure of 6000 psig or greater, for transportation of nonflammable gas (mode 1).
10421–N	Sun Refining and Marketing Company, Toledo, OH.	49 CFR 172.200, 173.118	To authorize transportation of limited quantities of flammable liquids in secured racks in company owned vehicles transported by company employees. Shipments will be exempt from labeling, packaging and shipping paper requirements (mode 1).
10515–N	Queen City Barrel Co., Cincinnati, OH.	49 CFR 178.118	To manufacture, mark and sell a DOT Specification 17H drum with plastic removable head for transportation of those solids as presently authorized in 17H drums or UN142 packaging Group II Packagings (modes 1, 2, 3).
10680–N	A.B. Chance Company, Centralia, MO.	49 CFR 173.302	To authorize shipment of sulfur hexafluoride, nonflammable gas, in non-DOT specification cylinders (modes 1, 3).
10713–N	Intercontinental Packaging Corporation, Tuckahoe, NY.	49 CFR 173.306	To manufacture, mark and sell a non-DOT specification polyethylene terephthalate plastic aerosol container with an inner flexible collapsible pouch for shipment of a nonflammable compressed gas (modes 1, 3, 5).
10822–N	Gulf and Caribbean Cargo, Inc., Orlando, FL.	49 CFR 172.101, 173.27, 175.75	To authorize the transportation of Class A explosives that are not permitted for shipment by air, or are in quantities greater than those prescribed for shipment by air (mode 4).
11022–N	A.B. Chance Co., Centralia, MO .	49 CFR 173.302	To authorize use of a non-DOT specification seamless molded biphenolic epoxy cylinder, for shipment of sulfur hexafluoride, classed in Division 2.2 (modes 1, 3).
11052–N	Fluoroware Inc., Chaska, MN	49 CFR 173.202, 173.242 and 173.243, Part 173, Subparts B, E and F; 173.158, 173.201.	To authorize the manufacture, mark and sell of non-DOT specification rotationally molded, Teflon PFA inner container enclosed in a polyethylene shell for shipment of Class 3, 8 and Division 5.1 (modes 1, 2, 3).
11415–N	Aldrich Chemical Co., Inc., Milwaukee, WI.	49 CFR 172.101(c)(13), 173.224(b).	To authorize the transportation of small quantities of 2,2-Azodi (isobutyronitrile) (AIBN) without temperature control when described as, and otherwise in conformance with the requirements applicable to, a ''Self-reactive solid type C'' in specially designed packaging (modes 1, 2, 4, 5).

DENIALS

9549–X	Request by High Energy International, Inc. Fort Worth, TX tothorizes the transport of oil well cartridges containing more than 350 grains, but not more than 600 grains of Class A, type 3 explosive, as Class C explosive, in a DOT Specification 12H fiberboard box denied May 26, 1995.
9549–X	Request by Western Atlas International, Inc. Houston TX tothories the transport of oil well cartridges containing more than 350 grains, but not more than 600 grains of Class A, type 3 explosive, as Class C explosive, in a DOT Specification 12H fiberboard box denied May 26, 1995.
9549–X	Request by Schlumberger Well Services Rosharon, TX tothoriizes the transport of oil well cartridges containing more than 350 grains, but not more than 600 grains of Class A, type 3 explosive, as Class C explosive, in a DOT Specification 12H fiberboard box denied May 26, 1995.
9549–X	Request by GOEX International, Inc. c/o Owen Compliance Svs. Fort Worth, TX tothorizes the transport of oil well cartridges containing more than 350 grains, but not more than 600 grains of Class A, type 3 explosive, as Class C explosive, in a DOT Specification 12H fiberboard box denied May 26, 1995.
10520–N	Request by Schlumberger Well Services Houston, TX to authorize the transport of oil well jet perforating guns with a booster attached to the detonating cord classed as Class C explosives denied May 31, 1995.

DENIALS—Continued

10786–N	Request by Puerto Rico Maritime Shipping Authority Pueble Viejo, Guaynabo, PR to authorize the transportation of vehicles with gasoline in their tanks in closed freight containers, with or without ramps, with connected battery cables equipped with wire seals denied June 26, 1995.
10952–N	Request by Propack, Inc. Essington, PA to authorize the transportation of poisonous liquids, corrosive, n.o.s., Division 6.1, in 3½ gallon pyrex glass bottles with teflon screw on valve and overpacked with aluminum container with 5 inch styrofoam top overpacked in a non-DOT specification plywood box denied June 23, 1995.
11148–N	Request by Willert Home Products St. Louis, MO to authorize the transportation of up to 16 ounces of hydrofluoric acid, solution Class 8 or sodium dithionite, Division 4.1 contained in polyethylene bottles overpacked in a fiberboard, described as consumer commodity denied May 26, 1995.
11289–N	Request by Western Industries, Inc. Milwaukee, WI to authorize an alternative testing method for leak detection of DOT-Specification 39 non-reusable cylinders containing certain compressed gases denied April 19, 1995.
11312–N	Request by Packaging Specialties Medina, OH to authorize the manufacture, marking and sale of a 71-gallon non-specification packaging known as a square drum comparable to DOT Spec. 17C and 17H drums for use in transporting Radioactive Materials, Class 7 denied May 26, 1995.
11376–N	Request by Ashland Chemical Co. Dublin, OH to authorize transportation in commerce of coating solutions, Class 3, material in 55-gallon UN specification 1A2/Y1.4/100 openhead steel drums denied June 20, 995.
11451–N	Request by Gabriel Chemicals Inc. Houston, TX to authorize DOT–412 cargo tank inspection every five years when used in chlorosulfonic acid service denied May 26, 1995.

Issued in Washington, DC, on July 6, 1995.

J. Suzanne Hedgepeth,

Chief, Exemption Programs, Office of Hazardous Materials Exemptions and Approvals.

[FR Doc. 95–17742 Filed 7–18–95; 8:45 am]

BILLING CODE 4910–60–M

Research and Special Programs Administration

Applications for Exemptions

AGENCY: Research and Special Programs Administration, DOT.

ACTION: List of applicants for exemptions.

SUMMARY: In accordance with the procedures governing the application for, and the processing of, exemptions from the Department of Transportation's Hazardous Materials Regulations (49 CFR part 107, Subpart B), notice is hereby given that the Office of Hazardous Materials Safety has received the applications described herein. Each mode of transportation for which a particular exemption is requested is indicated by a number in the ''Nature of Application'' portion of the table below as follows: 1—Motor vehicle, 2—Rail freight, 3—Cargo vessel, 4—Cargo aircraft only, 5—Passenger-carrying aircraft.

DATES: Comments must be received on or before August 18, 1995.

ADDRESS COMMENTS TO: Dockets Unit, Research and Special Programs Administration, U.S. Department of Transportation, Washington, DC 20590.

Comments should refer to the application number and be submitted in triplicate. If confirmation of receipt of comments is desired, include a self-addressed stamped postcard showing the exemption application number.

FOR FURTHER INFORMATION CONTACT:

Copies of the applications are available for inspection in the Dockets Unit, Room 8426, Nassif Building, 400 7th Street, SW. Washington, DC.

NEW EXEMPTIONS

Application No.	Applicant	Regulation(s) affected	Nature of exemption thereof
11455–N	Seattle King County Disaster Team, Seattle, WA.	49 CFR 175.75(a)(2)	To authorize the transportation in commerce of Class 8, 9 and Division 2.2 material which exceed quantities presently authorized by air (modes 4, 5).
11483–N	Autoflator AB, Vargarda, SW	49 CFR 2, Parts 106, 107 and 171–180.	To authorize the transportation of prototype airbag modules classed as Division 1.4G (modes 1, 4, 5).
11485–N	Zeneca Inc., Wilmington, DE	49 CFR 174.67(i)&(j)	To authorize rail cars containing various classes of hazardous materials to remain connected during unloading without the physical presence of an unloader (mode 2).
11484–N	General Chemical Corporation, Parsippany, NJ.	49 CFR 174.67(i) and (j)	To authorize rail cars to remain connected during unloading of anhydrous ammonia, Division 2.3, without the physical presence of an unloader (mode 2).
11486–N	U.S. Department of Defense, Falls Church, VA.	49 CFR 173.192, 173.40	To authorize the transportation in commerce of phosgene, Division 2.3, PIH, Zone A and cyanogen chlorine, inhibited, PIH, Zone A material in specially designed packaging (mode 1).
11487–N	Whittaker Electronic Systems, Simi Valley, CA.	49 CFR 178.36(9)	To authorize the transportation of a specially designed bottle assembly equipped with seal welded cylinder for use in transporting compressed gas mixtures of hydrogen and nitrogen, Division 2.1 and 2.2 (modes 1, 4, 5).
11488–N	Sea Containers, Washington, DC.	49 CFR 173.244	To authorize the transportation of demountable ISO tank container built to DOT–51 specification constructed of 316L stainless steel for use in transporting titanium tetrachloride, Class 8 (modes 1, 2, 3).

NEW EXEMPTIONS—Continued

Application No.	Applicant	Regulation(s) affected	Nature of exemption thereof
11489–N	TRW Vehicle Safety Systems, Queen Creek, AZ.	49 CFR 106, 107, 171–180	To authorize the transportation of air bag modules and components in specially designed packaging as essentially not regulated (mode 1).
11491–N	P.M. Industrial Gas Ltd., Georgetown.	49 CFR 173.315(a)	To authorize the manufacture, mark and sale of a refrigerated cargo tank mounted to a ISO flat rack unit for use in transporting liquefied carbon dioxide, Division 2 (modes 1, 3).
11492–N	V.F. Grace Inc., Anchorage, AK	49 CFR 172.101	To authorize the transportation in commerce of small quantities of smokeless powder for small arms in accessible compartments of cargo aircraft only (mode 4).
11493–N	The Coleman Co., Inc., Wichita, KS.	49 CFR 178.33–2(b), 178.33–8(a), 178.33–9(a).	To authorize the manufacture, mark, and sale of non-DOT specification inside containers conforming to DOT Specification 2P for use in transporting liquefied petroleum gases, Division 2.1 (modes 1, 2, 3, 4).
11494–N	Bendix-Atlantic Inflator Co., Knoxville, TN.	49 CFR 173.301(h), 173.302, 173.306(d)(3).	To authorize the manufacture, mark and sale of non-DOT specification cylinders for use as components of automotive vehicle safety systems for use in transporting compressed gas (modes 1, 2, 3, 4, 5).
11497–N	Chevron Products Co., San Francisco, CA.	49 CFR 173.31, 179.200–17(a)(2).	To authorize the one time transportation of a tank car with residual amount of corrosive liquid, n.o.s., Class 8 equipped with frozen bottom outlet valve in the open position (mode 2).
11501–N	Interstate Battery System of America, Inc., Dallas, TX.	49 CFR 173.159(e)	To authorize the transportation of batteries inside specially designed vehicles (mode 2).
11502–N	Federal Express Corporation, Memphis, TN.	49 CFR 171.11	To authorize the transportation of hazardous materials prepared in accordance with the ICAO regulations without regard to whether any portion of the transport includes transport by air commerce (mode 1).
11503–N	The American Waterways Operators, Seattle, WA.	49 CFR 172.504(a)	To authorize the transportation of unmanned deck barges without required placarding and segregation requirement with covered cargoes weighing under 1001 pounds (mode 3).
11505–N	Manchester Tank, Brentwood, TN.	49 CFR 173.34(i)(6)	To authorize DOT–4BW cylinders to be exempt from heat treatment requirements for use in transporting hazardous materials presently authorized by the CFR (mode).
11506–N	OEA Automotive Safety Products, Denver, CO.	49 CFR 173.301(h), 173.306(d)(3)(i), 178.65–11(a), 178.65–3(a), 178.65–9(b).	To provide for alternative testing requirements for non-DOT specification cylinders for use as components of automobile vehicle safety systems (modes 1, 2, 3, 4).
11507–N	Siemens Power Corp., Richland, WA.	49 CFR 173.306(a)(1)	To authorize the manufacture, mark and sale of zirconium rods containing test samples and dose measure devices which contain helium classed as non-flammable gas, Division 2.2 overpacked in wooden boxes which exceed 66 lbs. limit gas, Division 2.2 (modes 3, 4).
11508–N	Hercules Inc., Wilmington, DE ...	49 CFR 173.225(e)	To authorize the transportation of Organic Peroxides, Division 5.2 in intermediate bulk containers similar to DOT–57 portable tanks (mode 1).

NOTE: Notice of Application No. 11239–M ABS Industrial Verification, Inc., Houston, TX appeared at page 31534 of the FEDERAL REGISTER for June 15, 1995, should have appeared 11239–M CO.ME.F Carpenterla s.r.l Tradate, Italy.

This notice of receipt of applications for new exemptions is published in accordance with part 107 of the Hazardous Materials Transportations Act (49 U.S.C. 1806; 49 CFR 1.53(e)).

Issued in Washington, DC, on July 14, 1995.

J. Suzanne Hedgepeth,

Acting Director, Office of Hazardous Materials Exemptions and Approvals.

[FR Doc. 95–17743 Filed 7–18–95; 8:45 am]

BILLING CODE 4910–60–M

Applications for Modification of Exemptions or Applications to become a Party to an Exemption

AGENCY: Research and Special Program Administration, DOT.

ACTION: List of Applications for Modification of Exemptions or Applications to Become a Party to an Exemption.

SUMMARY: In accordance with the procedures governing the application for, and the processing of, exemptions from the Department of Transportation's Hazardous Materials Regulations (49 CFR part 107, subpart B), notice is hereby given that the Office of Hazardous Materials Safety has received the applications described herein. This notice is abbreviated to expedite docketing and public notice. Because the sections affected, modes of transportation, and the nature of application have been shown in earlier Federal Register publications, they are not repeated here. Requests for modifications of exemptions (e.g. to provide for additional hazardous materials, packaging design changes, additional mode of transportation, etc.) are described in footnotes to the application number. Application

numbers with the suffix ''M'' denote a modification request. Application numbers with the suffix ''P'' denote a party to request. These applications have been separated from the new applications for exemptions to facilitate processing.

DATES: Comments must be received on or before August 3, 1995.

ADDRESS COMMENTS TO: Docket Unit, Research and Special Programs Administration, U.S. Department of Transportation, Washington, DC 20590.

Comments should refer to the application number and be submitted in triplicate. If confirmation of receipt of comments is desired, include a self-addressed stamped postcard showing the exemption number.

FOR FURTHER INFORMATION CONTACT: Copies of the applications are available for inspection in the Dockets Unit, Room 8426, Nassif Building, 400 7th Street SW., Washington, DC.

Application No.	Applicant	Renewal of exemption
6614–M	Auto-Chlor System, Memphis, TN (See Footnote 1)	6614
10427–M	Astrotech Space Operations, L.P., Silver Spring, MD (See Footnote 2)	10427
10791–M	Con-Quest Products, Inc., Elk Grove Village, IL (See Footnote 3)	10791
11054–M	Welker Engineering Co., Sugar Land, TX (See Footnote 4)	11054

(1) To modify exemption to provide for alternative testing procedures for non-DOT specification polyethylene bottles, packed inside a high density polyethylene box for transportation of certain corrosive liquids.

(2) To modify exemption to provide for additional material classed in Division 2.2 and provide for an additional designed spacraft propulsion system.

(3) To modify the exemption to provide for 500 lb. double wall corrugated fiberboard boxes to be used for 30 and 20 gallon lab packs.

(4) To provide for an alternative testing method of non-DOT specification cylinders conforming to 3A specification for use in transporting various hazardous materials.

Application No.	Applicant	Parties to exemption
6538–P	The Coleman Company, Inc., Wichita, KS	6538
8451–P	Reynolds Systems, Inc., Middletown, CA	8451
9346–P	Slay Bulk Terminals, Inc., St. Louis, MO	9346
10441–P	Environmental Transportation Services, Inc., Oklahoma City, OK	10441
10933–P	Rollins Environmental Services, Wilmington, DE	10933
11055–P	Rollins Environmental Services, Wilmington, DE	11055
11156–P	Binns & Stevens Explosives, Inc. Oskaloosa, IA	11156
11156–P	Bennett Exposives, Inc., Manchester, IA	11156
11200–P	Lockheed Martin Corporation, Princeton, NJ	11200
11200–P	Space Systems Loral, Palo Alto, CA	11200
11230–P	Dyna-Blast, Inc., Nortonville, KY	11230
11230–P	Austin Powder Company, Cleveland, OH	11230
11230–P	Pepin-Ireco, Inc., Ishpeming, MI	11230
11294–P	Heritage Transport, Inc., Indianapolis, IN	11294
11355–P	Hurt's Transportation, Strathmore, CA	11355
11405–P	Color Pigments Manufacturers Association, Inc., Alexandria, VA	11405
11421–P	Chemical Conservation Corporation, Orlando, FL	11421

This notice of receipt of applications for modification of exemptions and for party to an exemption is published in accordance with part 107 of the Hazardous Materials Transportations Act (49 U.S.C. 1806; 49 CFR 1.53(e)).

Issued in Washington, DC, on July 14, 1995.

J. Suzanne Hedgepeth,

Acting Director, Office of Hazardous Materials Exemptions and Approvals.

[FR Doc. 95–17744 Filed 7–18–95; 8:45 am]

BILLING CODE 4910–60–M

DEPARTMENT OF THE TREASURY

Internal Revenue Service

Tax Counseling for the Elderly (TCE) Program; Availability of Application Packages

AGENCY: Internal Revenue Service, Treasury.

ACTION: Availability of TCE application packages.

SUMMARY: This document provides notice of the availability of Application Packages for the 1996 Tax Counseling for the Elderly (TCE) Program.

DATES: Application packages are available from the IRS at this time. The deadline for submitting an application package to the IRS for the 1996 Tax Counseling for the Elderly (TCE) Program is August 17, 1995.

ADDRESSES: Application Packages may be requested by contacting: Internal Revenue Service, 1111 Constitution Avenue NW., Washington, DC 20224 Attention: Program Manager, Tax Counseling for the Elderly Program, T:T:C:V, Room 1053, Salubria Building.

FOR FURTHER INFORMATION CONTACT: Ms. Karen Haag, T:T:C:V, Room 1053 (Salubria Building), Internal Revenue Service, 1111 Constitution Avenue NW., Washington, DC 20224. The non-toll-free telephone number is: (202) 283–0199.

SUPPLEMENTARY INFORMATION: Authority for the Tax Counseling for the Elderly (TCE) Program is contained in Section 163 of the Revenue Act of 1978, Pub. L. 95–600, (92 Stat. 12810), November 6, 1978. Regulations were published in the **Federal Register** at 44 FR 72113 on December 13, 1979. Section 163 gives Internal Revenue Service authority to enter into cooperative agreements with private or public non-profit agencies or organizations to establish a network of trained volunteers to provide free tax information and return preparation assistance to elderly individuals. Elderly individuals are defined as individual age 60 and over at the close of their taxable year.

Cooperative agreements will be entered into based upon competition among eligible agencies and

organizations. Because applications are being solicited before the FY 1996 budget has been approved, cooperative agreements will be entered into subject to appropriation of funds. Once funded, sponsoring agencies and organizations will receive a grant from the IRS for administrative expenses and to reimburse volunteers for expenses incurred in training and in providing tax return assistance. The Tax Counseling for the Elderly (TCE) Program is referenced in the Catalog of Federal Domestic Assistance in section 21.006.

Thomas Marusin,

Chief, Customer Services Branch.

[FR Doc. 95–17760 Filed 7–18–95; 8:45 am]

BILLING CODE 4830–01–U

Sunshine Act Meetings

Federal Register

Vol. 60, No. 138

Wednesday, July 19, 1995

This section of the FEDERAL REGISTER contains notices of meetings published under the ''Government in the Sunshine Act'' (Pub. L. 94-409) 5 U.S.C. 552b(e)(3).

FEDERAL MARITIME COMMISSION

TIME AND DATE: 10:00 a.m., July 19, 1995.

PLACE: Room 100 (Hearing Room)—800 North Capitol Street, NW., Washington, DC 20573–0001.

STATUS: Closed.

MATTER(S) TO BE CONSIDERED:

1. Pacific Trades

Discussion/Stabilization Agreements.

CONTACT PERSON FOR MORE INFORMATION: Joseph C. Polking, Secretary, (202) 523–5725.

Joseph C. Polking,

Secretary.

[FR Doc. 95–17915 Filed 7–17–95; 3:02 pm]

BILLING CODE 6730–01–M

UNITED STATES INTERNATIONAL TRADE COMMISSION

[USITC SE–95–022]

TIME AND DATE: July 24, 1995 at 2:30 p.m.

PLACE: Room 101, 500 E Street S.W., Washington, DC 20436.

STATUS: Open to the public.

MATTERS TO BE CONSIDERED:

1. Agenda for future meeting
2. Minutes
3. Ratification List
4. Inv. Nos. 701–TA–363–364 (Final) and 731–TA–711–717 (Final) (Oil Country Tubular Goods from Argentina, Austria, Italy, Japan, Korea, Mexico, and Spain)
5. Outstanding action jackets:
   1. ID–95–022, Industry and Trade Summaries: Education Services and Franchising.

In accordance with Commission policy, subject matter listed above, not disposed of at the scheduled meeting, may be carried over to the agenda of the following meeting.

Issued: July 14, 1995.

By order of the Commission.

Donna R. Koehnke,

Secretary.

[FR Doc. 95–17801 Filed 7–17–95; 8:50 am]

BILLING CODE 7020–02–P

federal register

Wednesday
July 19, 1995

Part II

Federal Communications Commission

47 CFR Part 90

Private Land Mobile Radio Services; Proposed and Final Rules

FEDERAL COMMUNICATIONS COMMISSION

47 CFR Part 90

[PR Docket No. 92–235, FCC 95–255]

Examination of Exclusivity and Frequency Assignment Policies of the Private Land Mobile Radio Services

AGENCY: Federal Communications Commission.

ACTION: Proposed rule.

SUMMARY: The Commission has adopted a Further Notice of Proposed Rule Making which seeks to introduce market forces into the Private Land Mobile Radio (PLMR) bands. This Further Notice of Proposed Rule Making proposes three options to introduce market forces into these bands: exclusivity, user fees, and competitive bidding. The Commission seeks comment on each of these options and believes that the information gathered will assist in developing and implementing an overall strategy on how to promote greater efficiency in these bands.

DATES: Comments must be filed on or before September 15, 1995, and reply comments must be filed on or before October 16, 1995.

ADDRESSES: Federal Communications Commission, 1919 M Street NW., Washington, DC 20554.

FOR FURTHER INFORMATION CONTACT: Ira Keltz of the Wireless Telecommunications Bureau at (202) 418–0680.

SUPPLEMENTARY INFORMATION: This is a summary of the Commission's Further Notice of Proposed Rule Making, PR Docket No. 92–235, FCC 95–255, adopted June 15, 1995, and released June 23, 1995. The full text of this Further Notice of Proposed Rule Making is available for inspection and copying during normal business hours in the FCC Reference Center (Room 239), 1919 M Street NW., Washington, DC. The complete text may be purchased from the Commission's copy contractor, International Transcription Services, Inc., 2100 M Street NW., Washington, DC 20037, telephone (202) 857–3800.

Summary of Notice of Proposed Rule Making

1. The Commission initiated the instant proceeding to explore methods to promote more efficient and effective use of the PLMR bands below 800 MHz. This action stems from the Commission's Notice of Proposed Rule Making (56 FR 31097, July 9, 1991) and Notice of Inquiry (57 FR 54034, November 16, 1992) in PR Docket 92–235 which sought public comment regarding ways to promote more efficient use of the PLMR bands below 800 MHz. The Commission does not believe that the current shared regulatory environment contains the proper incentives to encourage efficient spectrum usage. Introducing market-based incentives into these bands will help to encourage more efficient spectrum use while allowing users to make the equipment choices which best address their needs by attaching an economic cost to inefficient use of the spectrum and promoting the use of more efficient technologies. The user community will ultimately benefit from more efficient use of spectrum through the availability of more channels and better quality service.

2. The spectrum in the PLMR bands historically has been available on a shared use basis. The environment that has emerged is characterized by unlimited sharing of the spectrum by over 500,000 licensees with over 12 million transmitters. Because of the significant and varied spectrum use, the PLMR bands have become highly congested and there is a substantial risk that service in these bands will deteriorate to unacceptable levels. Unfortunately, in this shared use environment, PLMR users generally have little incentive to economize on spectrum use because users do not pay for their spectrum, cannot realize the benefit of more efficient use, and generally share their frequency assignments with a number of other users. Shared use of spectrum also precludes the use of spectrum efficient technologies, such as trunking and time division multiple access (TDMA) because they generally require centralized channel control.

3. This Further Notice of Proposed Rule Making proposes three options to introduce market forces into these bands: exclusivity, user fees, and competitive bidding. The Commission seeks comment on each of these options and believes that the information gathered will assist in developing and implementing an overall strategy on how to promote greater efficiency in these bands.

4. First, the Commission proposes the introduction of exclusivity on channels in the PLMR bands, and to explicitly permit the leasing of excess capacity on these exclusive channels. The Commission believes that offering users the option of exclusivity with the right to resell excess capacity if they agree to convert to narrowband technology by a specified date will promote the use of more efficient technologies. In addition, affording users the opportunity to obtain exclusivity will enable them to benefit directly from the increased capacity which results from their conversion to more efficient technologies, thus encouraging more rapid transition to narrowband technology. In this regard, users will be more likely to install trunked systems if they are certain that additional users, who might interfere with their trunked systems, would not be licensed on their channel. The Commission's experience with the spectrum above 800 MHz supports this theory. The introduction of exclusivity into the 800 MHz bands facilitated and encouraged the use of more spectrum efficient technologies and equipment. We seek here to provide users of the PLMR bands with that same flexibility to use the most advanced and efficient technology available.

5. Regarding the lease of excess capacity, in order to promote more flexible use of the spectrum, the Commission proposes to allow licensees who choose the exclusivity option to lease excess capacity to any party without restriction. The Commission seeks comment on whether such leasing arrangements should be limited to PLMR eligibles in order to ensure that sufficient spectrum is available to satisfy the needs of the PLMR community. Additionally, the Commission seeks comment on whether these proposals will affect whether traditional PLMR users, who seek to lease excess capacity, are considered commercial mobile radio service (CMRS) providers. The Commission tentatively concludes that licensees who lease excess capacity will have the aspect of their operations regulated as CMRS. The Commission seeks comment on this tentative conclusion.

6. Second, the Commission seeks comment on how a system of user fees can be used in these bands to encourage licensees to make the most efficient and effective use of the spectrum. Under this approach, users would pay a fee based on the estimated value of the spectrum. The spectrum fee would be calculated based on the area and population covered, and the amount of spectrum used. This type of a user fee structure would attach an economic cost to inefficient spectrum use, thereby motivating users to increase their efficient use of the spectrum. Although the Commission does not currently have statutory authority to impose such a fee structure, this option may be the most effective way to encourage efficiency in the PLMR bands while recognizing the varying needs of the incumbent users. The Commission believes that seeking further comment on the imposition of

user fees at this time will enable the Commission to consider how such fees can best be implemented in the PLMR bands, so that if fee authority is granted, the Commission will be able to act quickly to implement such authority.

7. Third, the Commission seeks comment on introducing competitive bidding into the PLMR bands as an alternative to user fees. Specifically, the Commission seeks comment on a proposal to create geographic overlay licenses and use competitive bidding as the assignment mechanism for these overlay licenses. Competitive bidding of overlay licenses could promote efficiency by allowing the marketplace to determine the value of spectrum and by awarding licenses to those who value them most highly, thus ensuring that spectrum will be put to its highest value use. As with exclusivity, competitive bidding of overlay licenses attaches a cost to inefficient spectrum use. The Commission's current auction authority does not permit the use of competitive bidding to assign private licenses because these licenses are not mutually exclusive and the principal use of the spectrum does not involve the provision of service to subscribers for a fee. However, expanded auction authority which could include private wireless users is proposed by the Administration and the U.S. Senate. Accordingly, the Commission believes that it is appropriate at this time to seek comment on how auctions could best be implemented for PLMR licenses, if such authority is granted.

8. Additionally, the Commission tentatively concludes that public safety users should be exempt from market-based incentives. Public safety users are charged with the protection of life and property, and the Commission is committed to ensuring that such users have access to spectrum to perform their critical function. We seek comment on exempting public safety users from spectrum fees and competitive bidding, or developing a reduced fee structure and a protected auction environment for these users.

9. The proposed rules are set forth at the end of this document.

10. FURTHER INITIAL REGULATORY FLEXIBILITY ANALYSIS

Reason for Action

This rule making proceeding was initiated to secure comment on proposals for establishing shared exclusive assignments arrangements in the PLMR bands which will grant licensees flexibility to voluntarily adopt new technology and thereby achieve more efficient use of spectrum. We also propose to permit licensees who convert to narrowband technology to sell or lease excess capacity to PMRS eligibles as a means of enhancing the competitive potential of the PLMR services in the marketplace. The proposals advanced in the Further Notice of Proposed Rule Making are also designed to respond to the increasing need for spectrum and considerable changes in the mobile communications landscape.

Objectives

The Commission proposes changes to its rules for the PLMR services for use of spectrum in a manner that yields the greatest potential benefit to the public. Specifically, the exclusivity proposal will promote more efficient use of spectrum by encouraging licensees participating in exclusive sharing agreements to convert to innovative narrowband technology in an expeditious manner. Further, the proposal relating to the sale or lease of excess capacity will provide for the enhancement of the PLMR services by allowing marketplace mechanisms to intervene to give insight into the value of the PLMR bands to private eligibles. These new proposals will result in improving the quality of service, increasing the level of technology, and fostering economic growth in the private land mobile environment.

Legal Basis

The legal basis for these rule changes if found in Section 4(i), 303(g), 303(r), 332(a), 332(c), and 332(d) of the Communications Act of 1934, as amended, 47 U.S.C. §§ 303(g), 303(r), 332(a), 332(c), and 332(d), as amended.

Reporting, Recordkeeping, and Other Compliance Requirements

Under the proposal for shared exclusivity agreements in the Further Notice of Proposed Rule Making, existing licensees will be required to report information regarding its plans for implementation of narrowband systems within 5 year guidelines after entering the exclusivity arrangement. These reports will serve as a benchmark for the Commission to measure the progress of licensees in fulfilling their plans to determine whether a specific exclusivity agreement should be rescinded.

Federal Rules Which Overlap, Duplicate or Conflict With These Rules

None.

Description, Potential Impact, and Number of Small Entities Involved

The *Further Notice of Proposed Rule Making* potentially affects numerous small entities, as the private land mobile services is comprised of millions of small business entities operating in urban and rural areas across the United States. The shared exclusivity and the sale or lease of excess capacity proposals are options available for small business licensees, as well as all other entities utilizing the private land mobile service. Many small entities could be positively affected by the proposals because they provide for new exclusive communications assignments that will foster new technologies and promote the competitive potential of the PLMR spectrum. The full extent of the impact on small entities cannot be predicted until various issues raised in the proceeding have been resolved. After evaluating the comments filed in response to the Further Notice, the Commission will examine further the impact of all final rules in this proceeding on small entities and set forth its findings in the Final Regulatory Flexibility Analysis.

Any Significant Alternatives Minimizing the Impact on Small Entities Consistent With the Stated Objectives

This Further Notice of Proposed Rule Making solicits comments on a variety of alternatives. Any additional significant alternatives presented in the comments will also be considered.

List of Subjects in 47 CFR Part 90

Communications equipment, Radio.

Federal Communications Commission.

William F. Caton,

Acting Secretary.

Part 90 of Chapter I of Title 47 of the Code of Federal Regulations is proposed to be amended as follows:

PART 90—PRIVATE LAND MOBILE RADIO SERVICES

1. The authority citation for Part 90 continues to read as follows:

Authority: Sections 4, 302, 303, and 332, 48 Stat. 1066, 1082, as amended; 47 U.S.C. 154, 302, 303, and 332, unless otherwise noted.

2. Section 90.175 is amended by revising paragraph (a) to read as follows:

§ 90.175 Frequency coordination requirements.

* * * * *

(a) For frequencies between 25 and 470 MHz: A statement from the applicable frequency coordinator recommending the most appropriate frequency. The coordinator's recommendation may include comments on technical factors such as power, antenna height and gain, terrain and other factors which may serve to

minimize potential interference. Tables 1 and 2 in § 90.193 must be used by coordinators to determine co-channel station distance separations between stations participating in a negotiated exclusivity agreement and those stations that are not participating in a negotiated exclusivity agreement. Frequencies in the 450–470 MHz band, when used for secondary fixed operations, shall be assigned and coordinated pursuant to § 90.261.

* * * * *

3. Section 90.189 is added to read as follows:

§ 90.189 Shared Exclusivity—150–170, 421–430, and 450–470 MHz Bands.

To promote spectrally efficient technologies (e.g. trunking, TDMA, etc.) and to increase quality of service for licensees, assignments may be limited on certain frequencies in a specific geographic area as set out in §§ 90.190–90.193.

4. Section 90.190 is added to read as follows:

§ 90.190 User agreements.

Co-channel licensees, operating in the same geographical area can, by mutual agreement, develop sharing arrangements on their currently licensed frequency or frequencies that would facilitate their use of advanced technology. The following guidelines will apply to the development of these sharing agreements:

(a) This agreement must be unanimous among all licensees on a given frequency or frequencies within the composite service area, irrespective of the radio service to which each user belongs. Any license application forwarded from a frequency coordinator to the Commission, prior to the date that the coordinator is notified, in writing, of a licensee action to negotiate an agreement will be considered, for the purposes of the agreement, an existing licensee and must be included in the agreement.

(b) All agreements must be finalized by August 31, 2000. Each participant of the plan must agree to utilize equipment designed to operate single mode with a maximum channel bandwidth of 6.25 kHz or equipment designed to operate single mode with a channel bandwidth of 12.5 kHz provided that it meets the efficiency standard of one communication channel per 6.25 kHz within 5 years after an agreement is finalized.

(c) A 90 day temporary freeze on the assignment of new licensees on a given frequency or frequencies will be made when a licensee, who desires to negotiate with other co-channel users to enter a sharing agreement, notifies all frequency coordinators who have cognizance of that frequency. This notification must be in writing and include:

(1) The frequency or frequencies under consideration; and

(2) A description of all co-channel licensees who must be a party to the agreement. This description will include: a list of all affected co-channel licensees, their base station locations (latitude and longitude), their current service areas, and their exclusivity service area. The exclusivity service area for each licensee will be defined as a point radius centered on their base station. The maximum radius defining the size of the exclusivity service area will consistant with the specifications of § 90.205.

(d) During the temporary freeze on new licenses in the exclusivity service area, no new licenses will be granted without the consent of all existing users within this area. Co-channel licenses will be granted outside of the exclusivity service area at minimum distances as determined by the tables of § 90.193. Existing licensees who are located outside of the composite service area and closer than the minimum distance to this area as specified by the tables of § 90.193 may continue to operate on a co-primary basis with all licensees inside the composite service area.

(e) If at the completion of the 90 day period, a unanimous agreement is not reached among all licensees, the freeze on new authorizations on the frequency or frequencies within this area will be lifted. No licensee who is located within the exclusivity service area may file a new notification to temporarily freeze this frequency or frequencies in this area for a minimum of one calendar year from the date the temporary freeze expires. All parties are still free to negotiate an agreement, but must include any new licensees who are located within the composite service area.

(f) If prior to or at the completion of the 90 day period, a unanimous agreement is reached among all licensees, the freeze on new authorizations on this frequency or frequencies in this composite service area will be made permanent. No new licenses will be granted on this frequency or frequencies in the exclusivity service area without the consent of participants in the agreement, but systems subject to the agreement can be modified, expanded, or renewed. Existing licensees who are located outside of the exclusivity service area and closer than the minimum distance to this area as specified by the tables of § 90.193 may continue to operate on a co-primary basis with all licensees inside the exclusivity service area.

(1) The final agreement will be filed with all cognizant frequency coordinators. This agreement will include:

(i) The frequency or frequencies which are covered under the agreement;

(ii) Signatures of all parties to the agreement;

(iii) A description of all co-channel licensees who must be a party to the agreement. This description will include: a list of all affected co-channel licensees, their base station locations (latitude and longitude), their current service areas, and their exclusivity service area; and

(iv) A plan for complying with the requirement to employ narrowband technology within five (5) years from the agreement date.

(2) The coordinator must make this agreement available to the public upon request.

(3) New co-channel licenses will not be granted closer to the composite service area than the minimum distances determined by the tables in § 90.193.

(4) If a licensee expands a system after an agreement is negotiated and filed with the cognizant frequency coordinators, then any portion of the expanded service area which falls outside of the composite service area of the agreement, will not be afforded the protection of the tables in § 90.193 from co-channel licensees, unless a new agreement which includes the expanded area is negotiated.

5. Section 90.191 is added to read as follows:

§ 90.191 Sell or lease of excess capacity.

Licensees who participate in a sharing plan and have fully converted their systems to narrowband or equivelent operation may lease excess capacity of their systems.

6. Section 90.193 is added to read as follows:

§ 90.193 Shared exclusivity separation distances.

The minimum distance between an existing base station that is included in a negotiated exclusivity agreement and a proposed co-channel station not included in the agreement will be determined from tables 1 and 2.

TABLE 1.—150–174 MHz—MINIMUM DISTANCE (KM) BETWEEN EXISTING BASE STATIONS AND PROPOSED STATIONS [1]

Proposed service area (km)	Existing station service area radius (km) [2]									
	3	8	13	16	24	32	40	48 [3]	64 [3]	80 [3]
3	16	27	45	60	84	90	100	111	138	162
8	27	32	50	64	88	95	105	118	143	164
13	45	50	55	69	93	100	110	122	148	169
16	60	64	69	70	97	103	113	130	151	172
24	84	88	93	97	105	111	121	134	160	180
32	90	95	100	103	111	119	129	142	167	188
40	100	105	110	113	121	129	140	150	176	196
48 [3]	111	118	122	126	134	142	150	158	184	204
64 [3]	138	143	148	151	160	167	176	184	194	220
80 [3]	162	164	169	172	180	188	196	204	220	237

[1] Distances are based upon 37 dBu desired and 19 dBu undesired signal strengths and are derived from FCC Report R–6602, Figs. 19 and 20 (See § 73.699 of this chapter, Figs. 10 and 10a)

[2] For those stations licensed before August 1, 1996, whose authorizations do not include a service area radius or area of operation, the service areas will be determined from table 1 using the station's authorized transmitter power increased by 3 dB or its actual ERP when given, and the antenna height above sea level in lieu of HAAT, or the HAAT if given.

[3] Permitted only for base stations located 200 km (125 mi) or more from the center of markets 1–60 as listed in § 90.741. Applicants for such systems must demonstrate that the signal strength at the edge of their service area does not exceed 37 dBu.

TABLE 2.—421–430, 450–470 MHz—MINIMUM DISTANCE BETWEEN EXISTING BASE STATIONS AND PROPOSED STATIONS [1]

Proposed service area (km)	Existing station service area radius (km) [2]									
	3	8	13	16	24	32	240 [3]	248 [3]	264 [3]	>64 [3]
3	16	27	43	55	68	80	97	111	155	180
8	27	32	48	60	72	85	101	118	159	185
13	43	48	53	64	77	90	106	122	164	190
16	55	60	64	68	80	93	109	126	167	194
24	68	72	77	80	89	101	118	134	175	201
32	80	85	90	93	101	109	126	142	184	209
40 [3]	97	101	106	109	118	126	134	150	192	217
48 [3]	111	118	122	126	134	142	150	158	200	225
64 [3]	155	159	164	167	175	184	192	200	216	242
>64 [3]	180	185	190	193	201	209	217	225	241	253

[1] Distances are based upon 37 dBu desired and 19 dBu undesired signal strengths and are derived from FCC Report R–6602, Figs. 19 and 20 (See § 73.699 of this chapter, Figs. 10 and 10a).

[2] For those stations licensed before August 1, 1996, whose authorizations do not include a service area radius or area of operation, the service areas will be determined from table 1 using the station's authorized transmitter power increased by 3 dB or its actual ERP when given, and the antenna height above sea level in lieu of HAAT, or the HAAT if given.

[3] Permitted only for base stations located 200 km (125 mi) or more from the center of markets 1–60 as listed in § 90.741. Applicants for such systems must demonstrate that the signal strength at the edge of their service area does not exceed 37 dBu.

[FR Doc. 95–17302 Filed 7–18–95; 8:45 am]

BILLING CODE 6712–01–P

FEDERAL COMMUNICATIONS COMMISSION

47 CFR Part 90

[PR Docket No. 92–235, FCC 95–255]

Private Land Mobile Radio Services

AGENCY: Federal Communications Commission.

ACTION: Final rule.

SUMMARY: The Commission has adopted a *Report and Order* which resolves many of the technical issues which have inhibited private land mobile radio (PLMR) users from employing the most spectrally-efficient technologies. Specifically, the frequency bands affected by these changes are the 150–174 MHz VHF band and the 421–430, 450–470, and 470–512 MHz UHF bands. The rules establish a new channelling plan, provide technical flexibility which will enable private wireless users to make equipment investment decisions to accommodate their diverse needs, and mandate consolidation and suggest an initial framework for the PLMR services. Finally, the Commission has decided not to replace 47 CFR part 90, with 47 CFR part 88 at this time. These amendments were necessary in order to ensure that the quality of communications in the PLMR bands below 800 MHz does not deteriorate to the point of endangering public safety and the national economy.

EFFECTIVE DATE: August 18, 1995.

FOR FURTHER INFORMATION CONTACT: Ira Keltz of the Wireless Telecommunications Bureau at (202) 418–0680.

SUPPLEMENTARY INFORMATION: This is a summary of the Commission's *Report and Order*, adopted June 15, 1995, and released June 23, 1995. The full text of this action is available for inspection and copying during normal business hours in the FCC Reference Center, Room 239, 1919 M Street, N.W., Washington, D.C. The complete text may be purchased from the Commission's copy contractor, ITS, Inc., (202) 857–3800, 2100 M Street, N.W., Suite 140, Washington, D.C. 20037.

Summary of Report and Order

1. In this action the Commission adopts rule changes to promote efficient use of the Private Land Mobile Radio (PLMR) services below 800 MHz. Specifically, the Commission adopts extensive rule changes to the PLMR services below 800 MHz which will promote highly effective and efficient use of the PLMR spectrum and facilitate the introduction of advanced technologies into the private mobile services. Foremost among the changes, the Commission establishes a new narrowband channelling plan, establishes transition dates for the type acceptance of increasingly efficient equipment, and requires consolidation of the Private Land Mobile Radio Services. The Commission has also made changes to technical rules to support the above mentioned changes and to promote more efficient use of the PLMR spectrum.

2. The new channelling plan which the Commission adopts is based on current channel centers and narrowband (NB) channels. This ''on-channel'' approach, which is important to current licensees, will provide a simple migration path and minimize confusion in the transition to narrowband technologies by allowing users to remain on their current licensed frequency. In general, channel spacings are as follows: in the 72–76 MHz band, the existing channel spacings will be maintained; in the 150–174 MHz VHF band channels will be listed every 7.5 kHz; and in the 421–512 MHz UHF band channels will be listed every 6.25 kHz. Specifically, for frequencies (channels) authorized in the 150–174 MHz band, the Commission is generally adopting 6.25 kHz wide channels that are spaced every 7.5 kHz. Within each individual radio service allocation, interleaved channels are created by assigning channels every 7.5 kHz higher in frequency than each existing channel. Similarly, in the 421–512 MHz band the Commission is establishing 6.25 kHz wide channels. Within each individual radio service allocation, interleaved channels are created by assigning channels every 6.25 kHz higher in frequency than each existing channel. Each interleaved channel will have the same limitation restrictions, except in certain cases for authorized bandwidth, as the channel which is immediately below it. In cases where an existing channel is shared by two or more radio services, the interleaved channel will also be shared among those same services. Where an existing channel is assigned to a single radio service, the interleaved channel will be allocated to only that radio service. In the few instances where currently available PLMR channels are adjacent to allocations for other radio service (e.g. maritime mobile radio service), one interleaved channel is created by assigning a channel in the same frequency pool as the currently available adjacent channel that is higher in frequency.

3. Flexibility is provided by allowing users to aggregate up to the equivalent of four narrowband channels. This approach allows users to satisfy their individual communication needs by utilizing equipment designed to operate with either 5, 6.25, 12.5, or 25 kHz channel bandwidths. This approach does not favor any particular type of land mobile technology, but adopts rules that permit the use of new spectrum efficient technologies. This provides technical flexibility by removing current barriers to allow entry of new technology into the private land mobile marketplace for a large, diverse community of users. By adopting a NB channelization plan, the Commission sets the direction for the industry to meet a long term goal of increasing the efficiency of the PLMR frequency bands.

4. An essential element of the channelization plan is the transition period in which it must be implemented. Rather than issuing a comprehensive set of dates mandating strict manufacturing and licensing requirements, the Commission will manage the transition to more spectrum efficient use of the PLMR frequency bands through the type acceptance process. This transition plan does not require current licensees to purchase new equipment, instead future equipment must meet increasingly efficient standards over the next ten years. The transition dates for the type acceptance are: August 1, 1996—New type accepted equipment must be designed to operate on channels of 12.5 kHz or less or on 25 kHz channels if the narrowband efficiency standard is met (multi-mode equipment that operates on 25 kHz channels will be allowed if it is also capable of operating on 12.5 kHz and/or narrower channels); and January 1, 2005—New type accepted equipment must be designed to operate on channels of 6.25 kHz or less or on channels up to 25 kHz if the narrowband efficiency standard is met (multi-mode equipment that operates on 25 kHz and/or 12.5 kHz channels will be allowed if it is also capable of operating on 6.25 kHz or narrower channels).

5. This transition plan provides users immediate flexibility in equipment decisions and provides a period for the development of new technologies. It allows each licensee the freedom to choose equipment and a transition schedule that best fulfills their needs while balancing technical capabilities and financial considerations. As systems wear out, and new radios are bought, users, will have a natural inducement, without a Government mandate, to use the narrower bandwidth of the multi-mode radios in order to avoid excessive adjacent channel interference. This will allow a natural

transition to more efficient systems as new equipment is bought within each users normal replacement cycle. The Commission also believes that a natural inducement exists for all users, especially those located in congested areas, to migrate to narrowband equipment as it becomes available.

6. Ten years affords PLMR users and manufacturers sufficient time to develop technical standards for narrowband radios and to design and test such radios. Further, this time period will provide ample time for different modulation techniques to be studied for compatibility and interference effects.

7. The Commission's type acceptance rules provide some flexibility by which manufacturers can continue to support their existing equipment through upgrades and modifications. Wideband equipment can continue to be produced, but these radios must include a multi-mode feature. With respect to this rule part and proceeding, a grant of type acceptance will be required for new multi-mode, or narrowband equipment. The new grant of type acceptance may cover a new transmitter design and/or upgraded units. Existing wideband (25 kHz) units that have the inherent capability for either multi-mode or narrowband operation may have the current grant of type acceptance modified to show the additional capability by filing a modification request which demonstrates that the original unit complies with the new technical requirements applicable to multi-mode or narrowband operation.

8. In cases where manufacturers have developed a conversion kit to retrofit existing wideband equipment and cause the modified unit to conform to the new technical requirements for new multi-mode or narrowband operation, the Commission will allow field modifications to add multi-mode or narrowband capability to equipment currently installed. So that this equipment can be recognized as having the revised capability, the modifying party, typically the manufacturer or its representative, must replace the existing FCC ID label with a new label that corresponds to the FCC ID of the associated new transmitter which was type accepted with the multi-mode or narrowband capability.

9. Another aspect of this plan concerns licensing on some of the new channels in the 150–174 and 421–512 MHz bands. License applications will not be accepted until one year after the effective date of the rules adopted in this proceeding for channels 7.5 kHz removed from VHF channels or for channels 6.25 kHz removed from UHF channels that are currently listed in 47 CFR Part 90 Subparts B, C, D, and E. This date will permit manufacturers sufficient time to obtain type acceptance for equipment that complies with the new technical requirements. The time lapse between adoption of the new rules and licensing on these new frequencies will also permit frequency coordinators time to establish proper coordination procedures for these frequencies.

10. The third major change to the Commission's rules is the consolidation of the PLMR radio services. The Commission believes that consolidation of the twenty current PLMR radio services into 2–4 radio services is essential to increasing efficiency and providing for more flexible spectrum use by ensuring more efficient distribution of the additional channels created as a result of the transition to narrowband technology. Consolidation will permit licensees to utilize technologically innovative and efficient equipment. Further, maintaining the 20 radio services is administratively burdensome; consolidation will lead to greater operational efficiency for users and promote more flexible use of the spectrum. Also, it is the Commission's intention to create competition in the frequency coordination function by allowing users in the newly created service groups to use the services of any recognized frequency coordinator. The Commission will give the PLMR community a further opportunity to submit a proposal that reflects their interests and needs and is mutually agreeable, reasonable, and workable. The Commission is asking the users and frequency coordinators to provide guidance in their consolidation proposal on how this can best be accomplished. Also, the consolidation proposal should explore creating and implementing a national real time database to ensure fair competition among all of the frequency coordinators by reflecting frequency assignments as expeditiously as possible. Further, coordination fees should be discussed in the consolidation proposal filed with the Commission.

11. The Commission takes this approach because it believes that maintaining the existing number of services is outmoded and no longer works as efficiently as when the discrete services were first developed and the spectrum was less heavily utilized. It is hoped that by encouraging PLMR user input, the concerns of all parties will be considered. The Commission recognizes the importance of the different services, particularly Public Safety, and encourages users to develop a proposal which includes a Public Safety pool. Further, the Commission recommends that users provide clear guidelines as to the requirements necessary for inclusion in the Public Safety pool to prevent overcrowding and to maintain the critical functions of the users included within this pool. Additionally, the Commission recommends that users consider whether a single coordinator or multiple coordinators should be used for public safety users. These changes can work to improve the efficiency of the spectrum environment.

12. Achieving a consensus on a consolidation plan is the ultimate objective. Although a consensus proposal would be ideal, the Commission is not at this time establishing an advisory committee under the Federal Advisory Committee Act, 5 U.S.C. App. 2, or a negotiated rule making committee, P.L. No. 101–648, 105 Stat. 4969 (1990), 5 U.S.C. §§ 581–590; rather, the Commission is merely encouraging the PLMR community, together with the frequency coordinators, to submit their further views. Therefore, the Commission is postponing issuing a plan at this time. The PLMR community will have the opportunity to negotiate and submit a comprehensive consensus plan for consolidation to the Commission within 3 months of the effective date of this *Report and Order.* The Commission will issue final rule amendments on this subject based on the record without further notice. These rule amendments will incorporate the PLMR community's consensus plan, if consensus is achieved within the rubric of this *Report and Order.*

13. Many additional changes to the Commission's rules which support the major decisions outlined above were also made in this proceeding. One of these changes deals with the secondary use of low-power operations on frequencies offset 12.5 kHz from assigned channels in the 450–470 MHz band. Under the new channelization plan, the current offset channels will no longer be offsets, but will be regularly assignable channels available in the various radio services. This will create instances where a channel that is currently available as an offset in more than one radio service will now be assignable in only one radio service. Therefore, licensees whose frequencies are no longer available in the radio service in which they are licensed will be grandfathered on their current frequency and will be permitted to modify, expand, and renew their systems. Also, since it is apparent that there is a continuing need for licensees to use low-power operations, the frequency coordinator for each radio service, as part of the coordination

transition plan, will be permitted to designate specific channels for low-power use. In order to promote flexibility for regions with differing communications requirements, these designations can be varied by specific geographic region. Each coordinating entity will be required to maintain and supply to the public upon request, information on frequencies it designates for low-power use and the areas in which these frequencies are designated for such use.

14. Current licensees of 12.5 kHz offset frequencies, in addition to being subject to the same transition schedule as high-power users, will have several options: 1) they may remain on the frequencies for which they are licensed; or, 2) move to frequencies designated specifically for low-power use. Users who choose to remain on their current frequency may achieve primary status by raising their output power, and by supplying their station coordinates (latitude and longitude) to the Commission through the appropriate frequency coordinator. Users who wish to invoke this option must provide justification for raising their output power. Licensees on the offset frequencies who wish to remain at low-power on their current frequency will be secondary to new high-power operations on these frequencies. Users who choose to move to designated low-power frequencies will be given primary status on those frequencies after submitting their station coordinates to the Commission through the appropriate frequency coordinator.

15. Since the current use of low-power operations offset frequencies has been beneficial to private land mobile operations, the Commission adopts a similar structure consistent with the new narrowband channeling plan. Narrowband low-power offset channels will be available 3.125 kHz removed from most regularly assignable frequencies. These frequencies will be authorized on a secondary, non-interference basis and will be subject to all frequency coordination requirements.

16. Additionally to permit increased channel reuse, the Commission adopts limits in the 150–174 and 450–470 MHz bands on allowable effective radiated power/antenna height combinations for new stations, i.e., one which is not functionally integrated with an earlier-installed system, based on each stations service area. This overall approach will increase channel reuse, reduce the incidence of over-powered systems, reduce background noise, and provide technical flexibility to PLMR licensees. Finally, the transmitter power/antenna height limits that the Commission is adopting are sufficiently well defined to avoid placing a significant administrative burden on applicants, licensees, frequency coordinators, and the Commission.

17. The level of interference protection provided by the frequency separation between current assignments and new assignments using frequencies resulting from channel splitting may not be sufficient to permit same-area high-power operation. Thus, in order to not degrade communications quality below that presently afforded land mobile licensees in these bands, in some situations it may be necessary to place certain restrictions on the operation of new adjacent channel assignments, such as requiring a geographic separation or operation at substantially reduced power. Specific restrictions will depend on a number of system parameters such as transmitter power, antenna height, and distance between stations, all of which may vary considerably between systems. The Commission believes that there is not a sufficient record in the comments on which to base specific adjacent channel station separation requirements with respect to the new channelization plan. The Commission also believes that the frequency coordinators, with their knowledge of user requirements and local conditions, are in a better position than the Commission to determine separation distances needed in each case. Accordingly, the Commission is not adopting any specific mileage separation requirements at this time. The current separation requirements in 47 CFR § 90.173 will remain in effect until August 18, 1995. After this date the Commission will require the appropriate frequency coordinators to review applications for adjacent channel usage and determine appropriate separation distances based upon the technical characteristics of proposed and existing station(s).

18. The Commission adopts, for equipment designed to operate with a 12.5 kHz channel bandwidth in the 150–174 MHz and 421–512 MHz bands, a mask which incorporates the best attributes of the masks suggested by Ericsson and TIA. This adopted mask has the flat top characteristic of the Ericsson suggested mask, which will permit the use of wideband modulations, such as QPSK, and the roll off characteristic for the skirt region of the TIA suggested mask, which provides acceptable adjacent channel interference. Regarding the narrowband emission mask, there was no opposition to either the proposed mask or one suggested by TIA. The TIA mask is slightly less restrictive than the proposed mask by incorporating a slightly wider flat top region in order to accommodate a 9600 bps CQPSK modulation signal. Therefore, the Commission adopts the mask suggested by TIA for equipment that operates with a 6.25 kHz bandwidth in the 150–174 MHz and 421–512 MHz bands.

19. Regarding instrumentation and procedures to be used when measuring equipment emissions, general requirements are specified to provide guidance to manufacturers. With the broad range of equipment modulations and system requirements that may be encountered, however, the Commission will permit applicants for equipment type acceptance to utilize alternate procedures provided prior Commission approval is obtained.

20. Additionally, frequency deviation limits, which are applicable only to frequency modulation (FM), will no longer be specified for equipment designed to operate in the refarming bands. The new emission mask requirements make the need for a frequency deviation limit superfluous for FM equipment, and irrelevant for non-FM equipment. Therefore, because no comments opposed this proposal, the Commission is eliminating references to frequency deviation limits for equipment operating in the 150–174 MHz and 421–512 MHz bands.

21. Similar to the emission mask, narrower channel spacing increases the importance of frequency stability to reduce adjacent channel interference. TIA suggested frequency stability requirements for 12.5 kHz equipment are based on the performance of equipment that has been operating for a number of years in Europe and Asia in the same frequency bands. These stability requirements coupled with the emission masks, will provide adequate adjacent channel interference protection. Accordingly, the Commission adopts the frequency stabilities as proposed by TIA for base and mobile stations designed for operation with either a 12.5 kHz or 6.25 kHz bandwidth in the 150–174 MHz and 421–512 MHz bands.

22. Although frequency stability requirements were proposed for the 150–220 MHz band, the decision herein does not include the 216–220 MHz band. Operation in this band is secondary to Federal Government operations, and equipment operating in the 216–220 MHz band is required to comply with Federal Government technical standards. Therefore, the current base and mobile station frequency stabilities in the 220–222 MHz band are being retained.

23. In order to promote greater spectral efficiency, the Commission adopts efficiency standards for new radios. Although different efficiency standards were proposed for the VHF and UHF bands, the Commission adopts a common standard for all the refarming bands. In accordance with the transition dates for equipment in the 150–174 MHz VHF and 421–512 MHz UHF bands, the Commission adopts a spectrum efficiency standard of one voice channel per 12.5 kHz of channel bandwidth for equipment type accepted after August 1, 1996, and a spectrum efficiency standard of one voice channel per 6.25 kHz for equipment type accepted after January 1, 2005. Additionally, after August 1, 1996, equipment designed for data operation that uses more than a 6.25 kHz channel bandwidth, must meet a minimum efficiency standard of at least 0.768 bits per second per Hertz. At the chosen standard of 0.768 bps/Hz, the 6.25 kHz equipment will have a data rate of 4800 bps, and the 12.5 kHz equipment will have a data rate of 9600 bps. These are standard data rates. This standard will be incorporated into the type acceptance process by having equipment manufacturers certify as part of their application for type acceptance that their equipment meets the spectrum efficiency standard.

24. The Commission, in order to promote low-cost and low-power entry level communications, is making six additional frequencies in the 150 MHz band available to the Business Radio Service for low-power and itinerant operations. These are: 151.700 MHz, 151.760 MHz, and 154.5275 for itinerant use, and 151.820 MHz, 151.880 MHz, and 151.940 MHz for low-power use. Operation on these new low power frequencies will be limited to a maximum channel bandwidth of 12.5 kHz and a maximum output power of 1 watt. Also, after January 1, 2005, the Commission will continue to allow type acceptance of 12.5 kHz single mode radios that are designed to only operate on any of the low power and itinerant frequencies and have an output power of less than 2 watts.

25. Radio transmitters, when keyed on, require a very short period of time (in milliseconds) to ''warm-up'' and attain their designed operating frequency. During this short period of off-frequency operation, noise ''chirps'' are transmitted. A similar transient frequency behavior occurs when the transmitter is keyed off. Transmitters designed for digital transmissions produce in-band signals very close to an adjacent channel. Thus, noise ''chirps'' can cause interference to adjacent channel operations. The Commission proposed certain criteria to limit the amplitude of this type of noise. The comments indicate support for limiting these emissions. In order to assure that ''chirps'' do not cause excessive interfere to other land mobile licensees and to television receivers operating in adjacent bands, manufacturers must limit ''chirps'' in their equipment. Therefore, the Commission is adopting standards similar to those used by industry for transient frequency behavior for equipment designed to operate on 25, 12.5, or 6.25 kHz channel bandwidths.

26. The Commission also adopts several miscellaneous technical changes to 47 CFR Part 90. The Commission will allow the licensees in the Police Radio Service to use direct sequence spread spectrum during covert operations in addition to the currently allowed frequency hopping spread spectrum. Also, the Commission adopts new out-of-band emission limitations for transmitters licensed in the Business Radio Service that do not exceed 120 milliwatts in output power that are otherwise exempt from some of the technical standards of 47 CFR Part 90.

27. The rules are set forth at the end of this document.

28. The rules contained herein have been analyzed with respect to the Paperwork Reduction Act of 1980, 44 U.S.C. 3501 et seq., and found to contain no new or modified form, information collection, and/or record keeping, labeling, disclosure, or record retention requirements and will not increase or decrease burden hours imposed on the public.

29. This *Report and Order* is issued under the authority of sections 4(i) and 303(r) of the Communications Act of 1934 as amended, 47 U.S.C. 154(i) and 303(r).

Final Regulatory Flexibility Analysis

Need and Purpose of This Action

This *Report and Order* amends Part 90 of the Commission's rules governing the PLMR services. Specifically, this *Report and Order:* 1) increases channel efficiency by splitting existing channels between 150 and 512 MHz; 2) provides users technical flexibility to convert to narrowband technology; 3) introduces new power/antenna height limitations that will permit advanced technologies and reduce interference; 4) specifies new technical standards for emission masks, frequency stability, and spectrum efficiency. These actions will reduce congestion, meet future communications capacity needs and generally permit, facilitate and encourage licensees to be spectrum efficient. These proposals will not unduly burden the public or increase administrative costs.

Summary of Issues Raised by Public Comments in Response to the Initial Regulatory Flexibility Analysis

No party addressed the Initial Regulatory Flexibility Analysis (IRFA), although several parties, including AAR and ATA, produced higher per unit estimates of the cost of reducing transmitter power and deviation.

Significant Alternatives Considered and Rejected

Several proposals were suggested by commenters regarding the appropriate *channelization plan, transition period,* and *transmitter power/antenna heights.* One alternative which received strong support from the user community was to adopt a 12.5 kHz channelization plan. Another alternative presented the view that narrowband is more efficient than 12.5 kHz technology and recommended that the Commission convert to this technology to make the most gains in relieving spectrum congestion. Based on the record before us, we adopt a flexible channelization plan which is a combination of the above plans and considers the needs and concerns of users. The plan gives users the option of converting directly to narrowband technology or allowing users to first use 12.5 kHz equipment and thereafter migrate to narrowband technology. The Commission also reviewed varying proposals from users, ranging from 10 to 26 years, regarding the appropriate transition period for implementation of the channelization plan. We again adopt a flexible approach which permits users to amortize existing investments over standard equipment life cycles. The rules adopted impose minimal hardship on users, as they consider the significant costs users have already expended in imbedded equipment. The Commission also considered reducing the number of radio services. Generally, commenters did not agree on how many radio services should exist, which is a central issue in this debate. Therefore, in this document, because of the outstanding debate on this issue and several other issues, which need further discussion, we will not consolidate the radio services in this Report and Order. We believe that the move toward consolidation has merit and frequency coordinators of the radio services can greatly assist in the efficient implementation of the changes within this document. Consequently, we will allow frequency coordinators to submit a consolidation plan to the Commission

within three months of the effective date of this item. Finally, we also considered the ''safe-harbor'' power approach recommended by LMCC, and found it to contain significant merit. We are adopting a modified version of LMCC's plan. Power will remain grandfathered until the licensed system is essentially replaced. Furthermore, most existing licensees meet the revised power limitations.

List of Subjects in 47 CFR Part 90

Communications equipment, Radio.

Federal Communications Commission

William F. Caton,

Acting Secretary.

Final Rule

Part 90 of chapter I of title 47 of the Code of Federal Regulations is amended as follows:

PART 90—PRIVATE LAND MOBILE RADIO SERVICES

1. The authority citation for part 90 is revised to read as follows:

Authority: 47 U.S.C. 154, 302, 303, and 332, unless otherwise noted.

2. Section 90.17 is amended by revising the table of frequencies in paragraph (b), revising limitations (13) and (24), and adding limitations (28), (29), and (30) in paragraph (c), and revising paragraph (e)(3) to read as follows:

§ 90.17 Local Government Radio Service.

* * * * *

(b) * * *

LOCAL GOVERNMENT RADIO SERVICE FREQUENCY TABLE

Frequency or band	Class of station(s)	Limitations
Kilohertz:		
530	Base (T.I.S.)	23
1610	.....do	23
2726	Base or mobile	1
2000 to 10,000	Fixed, base or mobile	25
Megahertz:		
37.10	Base or mobile	2
37.18	.....do	2
37.26	.....do	2
39.06	Mobile	2, 3
39.10	Base or mobile	2
39.18	.....do	2
39.50	.....do	2
39.58	.....do	2
39.82	.....do	2
39.90	.....do	2
39.98	.....do	2
45.08	.....do	
45.12	.....do	
45.16	.....do	
45.20	.....do	
45.24	.....do	
45.28	.....do	
45.32	.....do	
45.36	.....do	
45.40	.....do	
45.44	.....do	
45.48	.....do	
45.52	.....do	
45.56	.....do	
45.60	.....do	
45.64	.....do	
46.52	.....do	
46.54	.....do	
46.56	.....do	
46.58	.....do	
72.00 to 76.00	Operational fixed	6
150 to 170	Base or mobile	29
153.740	Mobile	
153.7475	.....do	24
153.755	.....do	
153.7625	.....do	24
153.785	.....do	
153.7925	.....do	24
153.800	.....do	
153.8075	.....do	24
153.815	.....do	
153.8225	.....do	24
153.845	.....do	
153.8525	.....do	24
153.860	.....do	
153.8675	.....do	24
153.875	.....do	
153.8825	.....do	24
153.905	.....do	
153.9125	.....do	24

LOCAL GOVERNMENT RADIO SERVICE FREQUENCY TABLE—Continued

Frequency or band	Class of station(s)	Limitations
153.920	do	
153.9275	do	24
153.935	do	
153.9425	do	24
153.965	do	
153.9725	do	24
153.980	do	
153.9875	do	24
153.995	do	
154.0025	do	24
154.025	Base or mobile	
154.0325	do	24
154.040	do	5
154.0475	do	5, 24
154.055	do	5
154.0625	do	5, 24
154.085	do	5
154.0925	do	5, 24
154.100	do	5
154.1075	do	5, 24
154.115	do	5
154.1225	do	5, 24
154.45625	Fixed or mobile	9, 20, 21, 22
154.46375	do	7, 19, 20, 21, 22
154.47125	do	7, 20, 21, 22
154.47875	do	19, 20, 21, 22
154.965	Base or mobile	
154.9725	do	24
154.980	do	
154.9875	do	24
154.995	do	
155.0025	do	24
155.025	do	
155.0325	do	24
155.040	do	
155.0475	do	24
155.055	do	
155.0625	do	24
155.085	do	
155.0925	do	24
155.100	do	
155.1075	do	24
155.115	do	
155.1225	do	24
155.145	do	
155.1525	do	24
155.715	do	
155.7225	do	24
155.745	do	
155.7525	do	24
155.760	do	
155.7675	do	24
155.775	do	
155.7825	do	24
155.805	do	
155.8125	do	24
155.820	do	
155.8275	do	24
155.835	do	
155.8425	do	24
155.865	do	
155.8725	do	24
155.880	do	
155.8875	do	24
155.895	do	
155.9025	do	24
155.925	do	
155.9325	do	24
155.940	do	
155.9475	do	24
155.955	do	
155.9625	do	24

LOCAL GOVERNMENT RADIO SERVICE FREQUENCY TABLE—Continued

Frequency or band	Class of station(s)	Limitations
155.985	Mobile	
155.9925	.....do	24
156.000	.....do	
156.0075	.....do	24
156.015	.....do	
156.0225	.....do	24
158.745	Base and mobile	
158.7525	.....do	24
158.760	.....do	
158.7675	.....do	24
158.775	.....do	
158.7825	.....do	24
158.805	.....do	
158.8125	.....do	24
158.820	.....do	
158.8275	.....do	24
158.835	.....do	
158.8425	.....do	24
158.865	Mobile	
158.8725	.....do	24
158.880	.....do	
158.8875	.....do	24
158.895	.....do	
158.9025	.....do	24
158.925	.....do	
158.9325	.....do	24
158.940	.....do	
158.9475	.....do	24
158.955	.....do	
158.9625	.....do	24
169–172	.....do	27
173.20375	Fixed or mobile	7, 20, 21, 22
173.2100	.....do	7, 8, 21, 22
173.2375	.....do	9, 20, 21, 22
173.2625	.....do	9, 20, 21, 22
173.2875	.....do	9, 20, 21, 22
173.3125	.....do	9, 20, 21, 22
173.3375	.....do	9, 20, 21, 22
173.3625	.....do	9, 20, 21, 22
173.3900	.....do	7, 8, 21, 22
173.39625	.....do	7, 20, 21, 22
220 to 222	Base and mobile	4
450 to 470	Fixed, base, or mobile	10, 29
453.0125	Mobile	30
453.025	Central control, fixed	11
453.0375	Base or mobile	24
453.050	.....do	12
453.05625	.....do	12, 28
453.06250	.....do	12, 24
453.06875	.....do	12, 28
453.075	Central control, fixed	11
453.0875	Base or mobile	24
453.100	.....do	12
453.10625	.....do	12, 28
453.11250	.....do	12, 24
453.11875	.....do	12, 28
453.125	Central control, fixed	11
453.1375	Base or mobile	24
453.150	.....do	12
453.15625	.....do	12, 28
453.16250	.....do	12, 24
453.16875	.....do	12, 28
453.175	Central control, fixed	11
453.1875	Base or mobile	24
453.200	.....do	12
453.20625	.....do	12, 28
453.21250	.....do	12, 24
453.21875	.....do	12, 28
453.225	.....do	
453.23125	.....do	28
453.23750	.....do	24
453.24375	.....do	28

LOCAL GOVERNMENT RADIO SERVICE FREQUENCY TABLE—Continued

Frequency or band	Class of station(s)	Limitations
453.250	do	12
453.25625	do	12, 28
453.26250	do	12, 24
453.26875	do	12, 28
453.275	do	
453.28125	do	28
453.28750	do	24
453.29375	do	28
453.300	do	12
453.30625	do	12, 28
453.31250	do	12, 24
453.31875	do	12, 28
453.325	do	
453.33125	do	28
453.33750	do	24
453.34375	do	28
453.350	do	12
453.35625	do	12, 28
453.36250	do	12, 24
453.36875	do	12, 28
453.375	do	
453.38125	do	28
453.38750	do	24
453.39375	do	28
453.400	do	12
453.40625	do	12, 28
453.41250	do	12, 24
453.41875	do	12, 28
453.425	do	
453.43125	do	28
453.43750	do	24
453.44375	do	28
453.450	do	12
453.45625	do	12, 28
453.46250	do	12, 24
453.46875	do	12, 28
453.475	do	
453.48125	do	28
453.48750	do	24
453.49375	do	28
453.500	do	12
453.50625	do	12, 28
453.51250	do	12, 24
453.51875	do	12, 28
453.525	do	
453.53125	do	28
453.53750	do	24
453.54375	do	28
453.550	do	12
453.55625	do	12, 28
453.56250	do	12, 24
453.56875	do	12, 28
453.575	do	
453.58125	do	28
453.58750	do	24
453.59375	do	28
453.600	Base or mobile	12
453.60625	do	12, 28
453.61250	do	12, 24
453.61875	do	12, 28
453.625	do	
453.63125	do	28
453.63750	do	24
453.64375	do	28
453.650	do	12
453.65625	do	12, 28
453.66250	do	12, 24
453.66875	do	12, 28
453.675	do	
453.68125	do	28
453.68750	do	24
453.69375	do	28

LOCAL GOVERNMENT RADIO SERVICE FREQUENCY TABLE—Continued

Frequency or band	Class of station(s)	Limitations
453.700	do	12
453.70625	do	12, 28
453.71250	do	12, 24
453.71875	do	12, 28
453.725	do	
453.73125	do	28
453.73750	do	24
453.74375	do	28
453.750	do	12
453.75625	do	12, 28
453.76250	do	12, 24
453.76875	do	12, 28
453.775	do	
453.78125	do	28
453.78750	do	24
453.79375	do	28
453.800	do	12
453.80625	do	12, 28
453.81250	do	12, 24
453.81875	do	12, 28
453.825	do	
453.83125	do	28
453.83750	do	24
453.84375	do	28
453.850	do	12
453.85625	do	12, 28
453.86250	do	12, 24
453.86875	do	12, 28
453.875	do	
453.88125	do	28
453.88750	do	24
453.89375	do	28
453.900	do	12
453.90625	do	12, 28
453.91250	do	12, 24
453.91875	do	12, 28
453.925	do	
453.93125	do	28
453.93750	do	24
453.94375	do	28
453.950	do	12
453.95625	do	12, 28
453.96250	do	12, 24
453.96875	do	12, 28
453.975	do	
453.98125	do	28
453.98750	do	24
453.99375	do	28
458.025	Radio call boxes, fixed	11, 13
458.03750	Mobile	24
458.050	do	12
458.05625	do	12, 28
458.06250	do	12, 24
458.06875	do	12, 28
458.075	Radio call boxes, fixed	11, 13
458.08750	Mobile	24
458.100	do	12
458.10625	do	12, 28
458.11250	do	12, 24
458.11875	do	12, 28
458.125	Radio call boxes, fixed	11, 13
458.13750	Mobile	24
458.150	do	12
458.15625	do	12, 28
458.16250	do	12, 24
458.16875	do	12, 28
458.175	Radio call boxes, fixed	11, 13
458.18750	Mobile	24
458.200	do	12
458.20625	do	12, 28
458.21250	do	12, 24
458.21875	do	12, 28

LOCAL GOVERNMENT RADIO SERVICE FREQUENCY TABLE—Continued

Frequency or band	Class of station(s)	Limitations
458.225	do	
458.23125	do	28
458.23750	do	24
458.24375	do	28
458.250	do	12
458.25625	do	12, 28
458.26250	do	12, 24
458.26875	do	12, 28
458.275	do	
458.28125	do	28
458.28750	do	24
458.29375	do	28
458.300	do	12
458.30625	do	12, 28
458.31250	do	12, 24
458.31875	do	12, 28
458.325	do	
458.33125	do	28
458.33750	do	24
458.34375	do	28
458.350	do	12
458.35625	do	12, 28
458.36250	do	12, 24
458.36875	do	12, 28
458.375	do	
458.38125	do	28
458.38750	do	24
458.39375	do	28
458.400	do	12
458.40625	do	12, 28
458.41250	do	12, 24
458.41875	do	12, 28
458.425	do	
458.43125	do	28
458.43750	do	24
458.44375	do	28
458.450	do	12
458.45625	do	12, 28
458.46250	do	12, 24
458.46875	do	12, 28
458.475	do	
458.48125	do	28
458.48750	do	24
458.49375	do	28
458.500	do	12
458.50625	do	12, 28
458.51250	do	12, 24
458.51875	do	12, 28
458.525	do	
458.53125	do	28
458.53750	do	24
458.54375	do	28
458.550	do	12
458.55625	do	12, 28
458.56250	do	12, 24
458.56875	do	12, 28
458.575	do	
458.58125	do	28
458.58750	do	24
458.59375	do	28
458.600	do	12
458.60625	do	12, 28
458.61250	do	12, 24
458.61875	do	12, 28
458.625	do	
458.63125	do	28
458.63750	do	24
458.64375	do	28
458.650	do	12
458.65625	do	12, 28
458.66250	do	12, 24
458.66875	do	12, 28

LOCAL GOVERNMENT RADIO SERVICE FREQUENCY TABLE—Continued

Frequency or band	Class of station(s)	Limitations
458.675	do	
458.68125	do	28
458.68750	do	24
458.69375	do	28
458.700	do	12
458.70625	do	12, 28
458.71250	do	12, 24
458.71875	do	12, 28
458.725	do	
458.73125	do	28
458.73750	do	24
458.74375	do	28
458.750	do	12
458.75625	do	12, 28
458.76250	do	12, 24
458.76875	do	12, 28
458.775	do	
458.78125	do	28
458.78750	do	24
458.79375	do	28
458.800	do	12
458.80625	do	12, 28
458.81250	do	12, 24
458.81875	do	12, 28
458.825	do	
458.83125	do	28
458.83750	do	24
458.84375	do	28
458.850	do	12
458.85625	do	12, 28
458.86250	do	12, 24
458.86875	do	12, 28
458.875	do	
458.88125	do	28
458.88750	do	24
458.89375	do	28
458.900	do	12
458.90625	do	12, 28
458.91250	do	12, 24
458.91875	do	12, 28
458.925	do	
458.93125	do	28
458.93750	do	24
458.94375	do	28
458.950	do	12
458.95625	do	12, 28
458.96250	do	12, 24
458.96875	do	12, 28
458.975	do	
458.98125	do	28
458.98750	do	24
458.99375	do	28
470 to 512	Base or mobile	14
806 to 824	Mobile	15
851 to 869	Base or mobile	15
928 and above	Operational-fixed	16
929–930	Base only	26
1427 to 1435	Operational fixed, base or mobile	17
2450 to 2500	Base or mobile	18
10,550 to 10,680*	do	

*The frequencies in the band 10.55–10.68 GHz are available for Digital Termination Systems and for associated internodal links in the Point-to-Point Microwave Radio Service. No new licenses will be issued under this subpart but current licenses will be renewed.

(c) * * *

(13) Available for medical services mobile operations in the Emergency Medical Radio Service in accordance with § 90.27(c)(22).

* * * * *

(24) This frequency is not available in the 150–170 MHz band until August 18, 1996. This frequency will be assigned with an authorized bandwidth not to exceed 11.25 kHz. In the 450–470 MHz band, secondary telemetry operations pursuant to § 90.238(e) will be authorized on this frequency.

* * * * *

(28) This frequency is not available until August 18, 1996. After August 18, 1996 this frequency will be assigned

with an authorized bandwidth not to exceed 6 kHz.

(29) Assignment of frequencies in this band are subject to the provisions of § 90.173.

(30) This frequency is available for systems first licensed prior to August 18, 1995. No new systems will be authorized after August 18, 1995, but prior authorized systems may be modified, expanded, and renewed.

* * * * *

(e) * * *

(3) Frequencies in the 25–50 MHz, 150–170 MHz, 450–512 MHz and 902–928 MHz bands may be assigned for the operation of Location and Monitoring Service (LMS) systems in accordance with the provisions of subpart M of this part, notwithstanding this limitation.

* * * * *

3. Section 90.19 is amended by revising the table of frequencies in paragraph (d), removing and reserving limitation (19), revising limitation (26), and adding limitations (32), (33), and (34) in paragraph (e), amending paragraph (f)(5)(ii) by removing the entries for frequency ranges 460.0125–465.5125 MHz and 465.0125–460.5125 MHz and adding in its place 460.0125–460.5125 MHz and 465.0125–465.5125 MHz respectively, adding paragraph (g)(3)(iii), and revising paragraph (g)(5) to read as follows:

§ 90.19 Police Radio Service.

* * * * *

(d) * * *

POLICE RADIO SERVICE FREQUENCY TABLE

Frequency or band	Class of station(s)	Limitations
Kilohertz:		
851 to 856	Base or Mobile	22
928 and above	Operational fixed	23
929 to 930	Base only	27
1427 to 1435	Operational fixed, base or mobile	24
1722	.....do	2, 3
1730	.....do	2, 3
2366	.....do	1, 2
2382	.....do	2
2390	.....do	1, 2
2406	.....do	2
2430	.....do	2
2442	.....do	2
2450	.....do	2
2458	.....do	2
2482	.....do	2
2490	.....do	2, 3
Megahertz:		
37.02	Mobile	
37.04	Base or mobile	
37.06	.....do	
37.08	.....do	
37.10	.....do	9
37.12	.....do	
37.14	.....do	
37.16	.....do	
37.18	.....do	9
37.20	.....do	
37.22	.....do	
37.24	.....do	
37.26	.....do	9
37.28	.....do	
37.30	.....do	
37.32	.....do	
37.34	Mobile	
37.36	Base or mobile	
37.38	Mobile	
37.40	Base or mobile	
37.42	Mobile	
39.02	Base or mobile	
39.04	.....do	
39.06	.....do	9, 10
39.08	.....do	
39.10	.....do	9
39.12	.....do	
39.14	.....do	
39.16	.....do	
39.18	.....do	9
39.20	.....do	
39.22	.....do	
39.24	.....do	
39.26	Mobile	
39.28	Base or mobile	
39.30	Mobile	
39.32	Base or mobile	
39.34	Mobile	
39.36	Base or mobile	

POLICE RADIO SERVICE FREQUENCY TABLE—Continued

Frequency or band	Class of station(s)	Limitations
39.38	Mobile	
39.40	Base or mobile	
39.42	.....do	
39.44	.....do	
39.46	.....do	11
39.48	.....do	
39.50	.....do	9
39.52	.....do	
39.54	.....do	
39.56	.....do	
39.58	.....do	9
39.60	.....do	
39.62	.....do	
39.64	.....do	
39.66	Mobile	
39.68	Base or mobile	
39.70	Mobile	
39.72	Base or mobile	
39.74	Mobile	
39.76	Base or mobile	
39.78	Mobile	
39.80	Base or mobile	
39.82	.....do	9
39.84	.....do	
39.86	.....do	
39.88	.....do	
39.90	.....do	9
39.92	.....do	
39.94	.....do	
39.96	.....do	
39.98	.....do	9
42.02	.....do	2, 3, 12
42.04	.....do	2, 3, 12
42.06	.....do	2, 3, 12
42.08	.....do	2, 3, 12
42.10	.....do	2, 3, 12
42.12	.....do	2, 3, 12
42.14	.....do	2, 3, 12
42.16	.....do	2, 3, 12
42.18	Mobile	2, 12
42.20	.....do	2, 12
42.22	.....do	2, 12
42.24	.....do	2, 12
42.26	.....do	2, 12
42.28	.....do	2, 12
42.30	.....do	2, 12
42.32	Base or mobile	2, 3, 12
42.34	.....do	2, 3, 12
42.36	.....do	2, 3, 12
42.38	.....do	2, 3, 12
42.40	.....do	2, 3, 12, 28
42.42	.....do	2, 3, 12
42.44	.....do	2, 3, 12
42.46	.....do	2, 3, 12
42.48	.....do	2, 3, 12
42.50	.....do	2, 3, 12
42.52	.....do	2, 3, 12
42.54	.....do	2, 3, 12
42.56	.....do	2, 3, 12
42.58	.....do	2, 3, 12
42.60	.....do	2, 3, 12
42.62	.....do	2, 3, 12
42.64	.....do	2, 3, 12
42.66	Mobile	2, 12
42.68	.....do	2, 12
42.70	.....do	2, 12
42.72	.....do	2, 12
42.74	.....do	2, 12
42.76	.....do	2, 12
42.78	.....do	2, 12
42.80	Base or mobile	2, 3, 12
42.82	.....do	2, 3, 12

POLICE RADIO SERVICE FREQUENCY TABLE—Continued

Frequency or band	Class of station(s)	Limitations
42.84	.....do	2, 3, 12
42.86	.....do	2, 3, 12
42.88	.....do	2, 3, 12
42.90	.....do	2, 3, 12
42.92	.....do	2, 3, 12
42.94	.....do	2, 3, 12
44.62	.....do	2, 3, 12
44.66	.....do	2, 3, 12
44.70	.....do	2, 3, 12
44.74	.....do	2, 3, 12
44.78	Mobile	2, 12
44.82	.....do	2, 12
44.86	.....do	2, 12
44.90	.....do	2, 12
44.94	Base or mobile	2, 3, 12
44.98	.....do	2, 3, 12
45.02	.....do	2, 3, 12
45.06	.....do	2, 3, 12
45.10	.....do	
45.14	.....do	
45.18	.....do	
45.22	.....do	
45.26	Mobile	
45.30	.....do	
45.34	.....do	
45.38	.....do	
45.42	Base or mobile	
45.46	.....do	
45.50	.....do	
45.54	.....do	
45.58	.....do	
45.62	.....do	
45.66	.....do	
45.70	.....do	
45.74	Mobile	
45.78	.....do	
45.82	.....do	
45.86	Base or mobile	11
45.90	.....do	29
45.94	.....do	
45.98	.....do	
46.02	.....do	
72.00–76.00	Operational fixed	13
150 to 170	Base or mobile	33
154.650	Mobile	
154.6575	.....do	26
154.665	Base or mobile	12
154.6725	.....do	12, 26
154.680	.....do	12
154.6875	.....do	12, 26
154.695	.....do	12
154.7025	.....do	12, 26
154.710	Mobile	
154.7175	.....do	26
154.725	Base or mobile	
154.7325	.....do	26
154.740	.....do	
154.7475	.....do	26
154.755	.....do	
154.7625	.....do	26
154.770	Mobile	
154.7775	.....do	26
154.785	Base or mobile	
154.7925	.....do	26
154.800	.....do	
154.8075	.....do	26
154.815	.....do	
154.8225	.....do	26
154.830	Mobile	
154.8375	.....do	26
154.845	Base or mobile	
154.8525	.....do	26

POLICE RADIO SERVICE FREQUENCY TABLE—Continued

Frequency or band	Class of station(s)	Limitations
154.860	do	
154.8675	do	26
154.875	do	
154.8825	do	26
154.890	Mobile	
154.8975	do	26
154.905	Base or mobile	12
154.9125	do	12, 26
154.920	do	12
154.9275	do	12, 26
154.935	do	12
154.9425	do	12, 26
154.950	Mobile	
154.9575	do	26
155.01	Base or mobile	
155.0175	do	26
155.07	do	
155.0775	do	26
155.13	do	
155.1375	do	26
155.19	do	
155.1975	do	26
155.25	do	
155.2575	do	26
155.31	do	
155.3175	do	26
155.370	do	
155.3775	do	26
155.415	do	
155.4225	do	26
155.430	do	
155.4375	do	26
155.445	do	12
155.4525	do	12, 26
155.460	do	12
155.4675	do	12, 26
155.475	do	14
155.4825	do	14, 26
155.490	do	
155.4975	do	26
155.505	do	12
155.5125	do	12, 26
155.520	do	
155.5275	do	26
155.535	do	
155.5425	do	26
155.550	do	
155.5575	do	26
155.565	do	
155.5725	do	26
155.580	do	
155.5875	do	26
155.595	do	
155.6025	do	26
155.610	do	
155.6175	do	26
155.625	do	
155.6325	do	26
155.640	do	
155.6475	do	26
155.655	do	
155.6625	do	26
155.670	do	
155.6775	do	26
155.685	do	
155.6925	do	26
155.700	do	
155.7075	do	26
155.730	do	
155.7375	do	26
155.79	do	
155.7975	do	26

POLICE RADIO SERVICE FREQUENCY TABLE—Continued

Frequency or band	Class of station(s)	Limitations
155.85	Mobile	
155.8575	.....do	26
155.91	.....do	
155.9175	.....do	26
155.97	.....do	
155.9775	.....do	26
156.03	.....do	
156.0375	.....do	26
156.09	.....do	
156.0975	.....do	26
156.15	.....do	
156.1575	.....do	26
156.210	Base or mobile	
156.2175	.....do	26
158.7225	.....do	32
158.730	.....do	
158.7375	.....do	26
158.790	.....do	
158.7975	.....do	26
158.850	.....do	
158.8575	.....do	26
158.910	Mobile	
158.9175	.....do	26
158.970	.....do	
158.9775	.....do	26
159.030	.....do	
159.0375	.....do	26
159.090	Base or mobile	
159.0975	.....do	26
159.150	.....do	
159.1575	.....do	26
159.210	.....do	
159.2175	.....do	26
169–172	Mobile	30
173.075	Base or mobile	31
220–222	Base and mobile	4
450–470	Fixed, base, or mobile	15, 33
453.0375	Mobile	34
453.050	Base or mobile	16
453.05625	.....do	16, 32
453.06250	.....do	16, 26
453.06875	.....do	16, 32
453.0875	Mobile	34
453.100	Base or mobile	16
453.10625	.....do	16, 32
453.11250	.....do	16, 26
453.11875	.....do	16, 32
453.1375	Mobile	34
453.150	Base or mobile	16
453.15625	.....do	16, 32
453.16250	.....do	16, 26
453.16875	.....do	16, 32
453.1875	Mobile	34
453.200	Base or mobile	16
453.20625	.....do	16, 32
453.21250	.....do	16, 26
453.21875	.....do	16, 32
453.2375	Mobile	34
453.250	Base or mobile	16
453.25625	.....do	16, 32
453.26250	.....do	16, 26
453.26875	.....do	16, 32
453.2875	Mobile	34
453.300	Base or mobile	16
453.30625	.....do	16, 32
453.31250	.....do	16, 26
453.31875	.....do	16, 32
453.3375	Mobile	34
453.350	Base or mobile	16
453.35625	.....do	16, 32
453.36250	.....do	16, 26
453.36875	.....do	16, 32

POLICE RADIO SERVICE FREQUENCY TABLE—Continued

Frequency or band	Class of station(s)	Limitations
453.3875	Mobile	34
453.400	Base or mobile	16
453.40625	.....do	16, 32
453.41250	.....do	16, 26
453.41875	.....do	16, 32
453.4375	Mobile	34
453.450	Base or mobile	16
453.45625	.....do	16, 32
453.46250	.....do	16, 26
453.46875	.....do	16, 32
453.4875	Mobile	34
453.500	Base or mobile	16
453.50625	.....do	16, 32
453.51250	.....do	16, 26
453.51875	.....do	16, 32
453.5375	Mobile	34
453.550	Base or mobile	16
453.55625	.....do	16, 32
453.56250	.....do	16, 26
453.56875	.....do	16, 32
453.5875	Mobile	34
453.600	Base or mobile	16
453.60625	.....do	16, 32
453.61250	.....do	16, 26
453.61875	.....do	16, 32
453.6375	Mobile	34
453.650	Base or mobile	16
453.65625	.....do	16, 32
453.66250	.....do	16, 26
453.66875	.....do	16, 32
453.6875	Mobile	34
453.700	Base of mobile	16
453.70625	.....do	16, 32
453.71250	.....do	16, 26
453.71875	.....do	16, 32
453.7375	Mobile	34
453.750	Base or mobile	16
453.75625	.....do	16, 32
453.76250	.....do	16, 26
453.76875	.....do	16, 32
453.7875	Mobile	34
453.800	Base or mobile	16
453.80625	.....do	16, 32
453.81250	.....do	16, 26
453.81875	.....do	16, 32
453.8375	Mobile	34
453.850	Base or mobile	16
453.85625	.....do	16, 32
453.86250	.....do	16, 26
453.86875	.....do	16, 32
453.8875	Mobile	34
453.900	Base or mobile	16
453.90625	.....do	16, 32
453.91250	.....do	16, 26
453.91875	.....do	16, 32
453.9375	Mobile	34
453.950	Base or mobile	16
453.95625	.....do	16, 32
453.96250	.....do	16, 26
453.96875	.....do	16, 32
458.0375	Mobile	34
458.050	.....do	16
458.05625	.....do	16, 32
458.06250	.....do	16, 26
458.06875	.....do	16, 32
458.0875	.....do	34
458.100	.....do	16
458.10625	.....do	16, 32
458.11250	.....do	16, 26
458.11875	.....do	16, 32
458.1375	.....do	34
458.150	.....do	16

POLICE RADIO SERVICE FREQUENCY TABLE—Continued

Frequency or band	Class of station(s)	Limitations
458.15625	do	16, 32
458.16250	do	16, 26
458.16875	do	16, 32
458.1875	do	34
458.200	do	16
458.20625	do	16, 32
458.21250	do	16, 26
458.21875	do	16, 32
458.2375	do	34
458.250	do	16
458.25625	do	16, 32
458.26250	do	16, 26
458.26875	do	16, 32
458.2875	do	34
458.300	do	16
458.30625	do	16, 32
458.31250	do	16, 26
458.31875	do	16, 32
458.3375	do	34
458.350	do	16
458.35625	do	16, 32
458.36250	do	16, 26
458.36875	do	16, 32
458.3875	do	34
458.400	do	16
458.40625	do	16, 32
458.41250	do	16, 26
458.41875	do	16, 32
458.4375	do	34
458.450	do	16
458.45625	do	16, 32
458.46250	do	16, 26
458.46875	do	16, 32
458.4875	do	34
458.500	do	16
458.50625	do	16, 32
458.51250	do	16, 26
458.51875	do	16, 32
458.5375	do	34
458.550	do	16
458.55625	do	16, 32
458.56250	do	16, 26
458.56875	do	16, 32
458.5875	do	34
458.600	do	16
458.60625	do	16, 32
458.61250	do	16, 26
458.61875	do	16, 32
458.6375	do	34
458.650	do	16
458.65625	do	16, 32
458.66250	do	16, 26
458.66875	do	16, 32
458.6875	do	34
458.700	do	16
458.70625	do	16, 32
458.71250	do	16, 26
458.71875	do	16, 32
458.7375	do	34
458.750	do	16
458.75625	do	16, 32
458.76250	do	16, 26
458.76875	do	16, 32
458.7875	do	34
458.800	do	16
458.80625	do	16, 32
458.81250	do	16, 26
458.81875	do	16, 32
458.8375	do	34
458.850	do	16
458.85625	do	16, 32
458.86250	do	16, 26

POLICE RADIO SERVICE FREQUENCY TABLE—Continued

Frequency or band	Class of station(s)	Limitations
458.86875	do	16, 32
458.8875	do	34
458.900	do	16
458.90625	do	16, 32
458.91250	do	16, 26
458.91875	do	16, 32
458.9375	do	34
458.950	do	16
458.95625	do	16, 32
458.96250	do	16, 26
458.96875	do	16, 32
460.0125	do	34
460.01875	Base or mobile	32
460.025	do	
460.03125	do	32
460.03750	do	26
460.04375	do	32
460.050	do	
460.05626	do	32
460.06250	do	26
460.06875	do	32
460.075	do	
460.08125	do	32
460.08750	do	26
460.09375	do	32
460.100	do	
460.10625	do	32
460.11250	do	26
460.11875	do	32
460.125	do	
460.13125	do	32
460.13750	do	26
460.14375	do	32
460.150	do	
460.15625	do	32
460.16250	do	26
460.16875	do	32
460.175	do	
460.18125	do	32
460.18750	do	26
460.19375	do	32
460.200	do	
460.20625	do	32
460.21250	do	26
460.21875	do	32
460.225	do	
460.23125	do	32
460.23750	do	26
460.24375	do	32
460.250	do	
460.25625	do	32
460.26250	do	26
460.26875	do	32
460.275	do	
460.28125	do	32
460.28750	do	26
460.29375	do	32
460.300	do	
460.30625	do	32
460.31250	do	26
460.31875	do	32
460.325	do	
460.33125	do	32
460.33750	do	26
460.34375	do	32
460.350	do	
460.35625	do	32
460.36250	do	26
460.36875	do	32
460.375	do	
460.38125	do	32
460.38750	do	26

POLICE RADIO SERVICE FREQUENCY TABLE—Continued

Frequency or band	Class of station(s)	Limitations
460.39375	do	32
460.400	do	
460.40625	do	32
460.41250	do	26
460.41875	do	32
460.425	do	
460.43125	do	32
460.43750	do	26
460.44375	do	32
460.450	do	
460.45625	do	32
460.46250	do	26
460.46875	do	32
460.475	do	
460.48125	do	32
460.48750	do	26
460.49375	do	32
460.500	do	
460.50625	do	32
460.51250	do	26
460.51875	do	32
460.525	do	17
460.53125	do	17, 32
460.53750	do	17, 26
460.54375	do	17, 32
460.550	do	17
460.55625	do	17, 32
460.56250	do	17, 26
460.56875	do	17, 32
465.0125	Mobile	34
465.025	do	
465.03125	do	32
465.03750	do	26
465.04375	do	32
465.050	do	
465.05625	do	32
465.06250	do	26
465.06875	do	32
465.075	do	
465.08125	do	32
465.08750	do	26
465.09375	do	32
465.100	do	
465.10625	do	32
465.11250	do	26
465.11875	do	32
465.125	do	
465.13125	do	32
465.13750	do	26
465.14375	do	32
465.150	do	
465.15625	do	32
465.16250	do	26
465.16875	do	32
465.175	do	
465.18125	do	32
465.18750	do	26
465.19375	do	32
465.200	do	
465.20625	do	32
465.21250	do	26
465.21875	do	32
465.225	do	
465.23125	do	32
465.23750	do	26
465.24375	do	32
465.250	do	
465.25625	do	32
465.26250	do	26
465.26875	do	32
465.275	do	
465.28125	do	32

POLICE RADIO SERVICE FREQUENCY TABLE—Continued

Frequency or band	Class of station(s)	Limitations
465.28750	do	26
465.29375	do	32
465.300	do	
465.30625	do	32
465.31250	do	26
465.31875	do	32
465.325	do	
465.33125	do	32
465.33750	do	26
465.34375	do	32
465.350	do	
465.35625	do	32
465.36250	do	26
465.36875	do	32
465.375	do	
465.38125	do	32
465.38750	do	26
465.39375	do	32
465.400	do	
465.40625	do	32
465.41250	do	26
465.41875	do	32
465.425	do	
465.43125	do	32
465.43750	do	26
465.44375	do	32
465.450	do	
465.45625	do	32
465.46250	do	26
465.46875	do	32
465.475	do	
465.48125	do	32
465.48750	do	26
465.49375	do	32
465.500	do	
465.50626	do	32
465.51250	do	26
465.51875	do	32
465.525	do	17
465.53125	do	17, 32
465.53750	do	17, 26
465.54375	do	17, 32
465.550	Base or mobile	17
465.55625	do	17, 32
465.56250	do	17, 26
465.56875	do	17, 32
470–512	do	21
806–824	Mobile	22
851–869	Base or mobile	22
928 and above	Operational-fixed	23
929—930	Base only	27
1427 to 1435	Operational fixed, base or mobile	24
2450 to 2500	Base or mobile	25
10,550 to 10,680*	do	

*The frequencies in the band 10.55–10.68 GHz are available for Digital Termination Systems and for associated internodal links in the Point-to-Point Microwave Radio Service. No new licenses will be issued under this Subpart but current licenses will be renewed.

(e) * * *

(19) [Reserved]

* * * * *

(26) This frequency is not available in the 150–170 MHz band until August 18, 1996. This frequency will be assigned with an authorized bandwidth not to exceed 11.25 kHz. In the 450–470 MHz band, secondary telemetry operations pursuant to § 90.238(e) will be authorized on this frequency.

* * * * *

(32) This frequency is not available until August 18, 1996. After August 18, 1996 this frequency will be assigned with an authorized bandwidth not to exceed 6 kHz.

(33) Assignment of frequencies in this band are subject to the provisions of § 90.173

(34) This frequency is available for systems first licensed prior to August 18, 1995. No new systems will be authorized after August 18, 1995, but prior authorized systems may be modified, expanded, and renewed.

* * * * *

(g) * * *

(3) * * *

(iii) The use of direct sequence spread spectrum equipment is also permitted.

Equipment must meet the technical standards of 47 CFR 15.247.

* * * * *

(5) Frequencies in the 25–50 MHz, 150–170 MHz, 450–512 MHz and 902–928 MHz bands may be assigned for the operation of Location and Monitoring Service (LMS) systems in accordance with the provisions of subpart M of this part, notwithstanding this limitation.

* * * * *

4. Section 90.21 is amended by revising the table of frequencies in paragraph (b), revising limitation (16), and adding limitations (20), (21), and (22) in paragraph (c), and revising paragraph (e)(3) to read as follows:

§ 90.21 Fire Radio Service.

* * * * *

(b) * * *

FIRE RADIO SERVICE FREQUENCY TABLE

Frequency or band	Class of station(s)	Limitations
Kilohertz		
1630	Base or mobile	
Megahertz:		
33.42	Mobile or fixed	1
33.44	Base or mobile	
33.46	Mobile	
33.48	Base or mobile	
33.50	Mobile	
33.52	Base or mobile	
33.54	Mobile	
33.56	Base or mobile	
33.58	Mobile	
33.60	Base or mobile	
33.62	Mobile	
33.64	Base or mobile	
33.66	Mobile	
33.68	Base or mobile	
33.70	.....do	
33.72	.....do	
33.74	.....do	
33.76	.....do	
33.78	.....do	
33.80	.....do	
33.82	.....do	
33.84	.....do	
33.86	.....do	
33.88	.....do	
33.90	.....do	
33.92	.....do	
33.94	.....do	
33.96	.....do	
33.98	.....do	
45.88	.....do	2
46.06	.....do	
46.08	.....do	
46.10	.....do	
46.12	.....do	
46.14	.....do	
46.16	.....do	
46.18	.....do	
46.20	.....do	
46.22	Mobile	
46.24	.....do	
46.26	.....do	
46.28	.....do	
46.30	Mobile or fixed	1
46.32	Mobile	
46.34	.....do	
46.36	Base or mobile	
46.38	.....do	
46.40	.....do	
46.42	.....do	
46.44	.....do	
46.46	.....do	
46.48	.....do	
46.50	.....do	
72.00 to 76.00	Operational fixed	3
72.44	Mobile	19
72.48	.....do	19
72.52	.....do	19
72.56	.....do	19
72.60	.....do	19
75.44	.....do	19

FIRE RADIO SERVICE FREQUENCY TABLE—Continued

Frequency or band	Class of station(s)	Limitations
75.48	.....do	19
75.52	.....do	19
75.56	.....do	19
75.60	.....do	19
150 to 170	Base or mobile	21
153.77	Mobile	
153.7775	.....do	16
153.83	Mobile	18
153.8375	.....do	18, 16
153.890	Mobile	
153.8975	.....do	16
153.950	.....do	
153.9575	.....do	16
154.010	.....do	
154.0175	.....do	16
154.070	.....do	4
154.0775	.....do	4, 16
154.130	Base or mobile	4
154.1375	.....do	4, 16
154.145	.....do	4
154.1525	.....do	4, 16
154.160	.....do	4
154.1675	.....do	4, 16
154.175	.....do	4
154.1825	.....do	4, 16
154.190	.....do	4
154.1975	.....do	4, 16
154.205	.....do	4
154.2125	.....do	4, 16
154.220	.....do	4
154.2275	.....do	4, 16
154.235	.....do	4
154.2425	.....do	4, 16
154.250	.....do	4
154.2575	.....do	4, 16
154.265	.....do	2, 4
154.2725	.....do	2, 4, 16
154.280	.....do	2, 4
154.2875	.....do	2, 4, 16
154.295	.....do	2, 4
154.3025	.....do	2, 4, 16
154.310	.....do	4
154.3175	.....do	4, 16
154.325	.....do	4
154.3325	.....do	4, 16
154.340	.....do	4
154.3475	.....do	4, 16
154.355	.....do	4
154.3625	.....do	4, 26
154.370	.....do	4
154.3775	.....do	4, 16
154.385	.....do	4
154.3925	.....do	4, 16
154.400	.....do	4
154.4075	.....do	4, 16
154.415	.....do	4
154.4225	.....do	4, 16
154.430	.....do	4
154.4375	.....do	4, 16
154.445	.....do	4
154.4525	.....do	4, 16
166.250	.....do	5
169–172	Mobile	14
170.150	Base or mobile	5
220–222	Base and mobile	17
450–470	Fixed, base, or mobile	6, 21
453.0375	Mobile	22
453.050	Base or mobile	7
453.05625	.....do	20
453.06250	.....do	16
453.06875	.....do	20
453.0875	Mobile	22

FIRE RADIO SERVICE FREQUENCY TABLE—Continued

Frequency or band	Class of station(s)	Limitations
453.100	Base or mobile	7
453.10625	.....do	7, 20
453.11250	.....do	7, 16
453.11875	.....do	7, 20
453.1375	Mobile	22
453.150	Base or mobile	7
453.15625	.....do	7, 20
453.16250	.....do	7, 16
453.16875	.....do	7, 20
453.1875	Mobile	22
453.200	Base or mobile	7
453.20625	.....do	7, 20
453.21250	.....do	7, 16
453.21875	.....do	7, 20
453.2375	Mobile	22
453.250	Base or mobile	7
453.25625	.....do	7, 20
453.26250	.....do	7, 16
453.26875	.....do	7, 20
453.2875	Mobile	22
453.300	Base or mobile	7
453.30625	.....do	7, 20
453.31250	.....do	7, 16
453.31875	.....do	7, 20
453.3375	Mobile	22
453.350	Base or mobile	7
453.35625	.....do	7, 20
453.36250	.....do	7, 16
453.36875	.....do	7, 20
453.3875	Mobile	22
453.400	Base or mobile	7
453.40625	.....do	7, 20
453.41250	.....do	7, 16
453.41875	.....do	7, 20
453.4375	Mobile	22
453.450	Base or mobile	7
453.45625	.....do	7, 20
453.46250	.....do	7, 16
453.46875	.....do	7, 20
453.4875	Mobile	22
453.500	Base or mobile	7
453.50625	.....do	7, 20
453.51250	.....do	7, 16
453.51875	.....do	7, 20
453.5375	Mobile	22
453.550	Base or mobile	7
453.55625	.....do	7, 20
453.56250	.....do	7, 16
453.56875	.....do	7, 20
453.5875	Mobile	22
453.600	Base or mobile	7
453.60625	.....do	7, 20
453.61250	.....do	7, 16
453.61875	.....do	7, 20
453.6375	Mobile	22
453.650	Base or mobile	7
453.65625	.....do	7, 20
453.66250	.....do	7, 16
453.66875	.....do	7, 20
453.6875	Mobile	22
453.700	Base or mobile	7
453.70625	.....do	7, 20
453.71250	.....do	7, 16
453.71875	.....do	7, 20
453.7375	Mobile	22
453.750	Base or mobile	7
453.75625	.....do	7, 20
453.76250	.....do	7, 16
453.76875	.....do	7, 20
453.7875	Mobile	22
453.800	Base or mobile	7
453.80625	.....do	7, 20

FIRE RADIO SERVICE FREQUENCY TABLE—Continued

Frequency or band	Class of station(s)	Limitations
453.81250	.....do	7, 16
453.81875	.....do	7, 20
453.8375	Mobile	7, 22
453.850	Base or mobile	7
453.85625	.....do	7, 20
453.86250	.....do	7, 16
453.86875	.....do	7, 20
453.8875	Mobile	22
453.900	Base or mobile	7
453.90625	.....do	7, 20
453.91250	.....do	7, 16
453.91875	.....do	7, 20
453.9375	Mobile	22
453.950	Base or mobile	7
453.95625	.....do	7, 20
453.96250	.....do	7, 16
453.96875	.....do	7, 20
458.0375	Mobile	22
458.050	.....do	7
458.05625	.....do	7, 20
458.06250	.....do	7, 16
458.06875	.....do	7, 20
458.0875	.....do	22
458.100	.....do	7
458.10625	.....do	7, 20
458.11250	.....do	7, 16
458.11875	.....do	7, 20
458.1375	.....do	22
458.150	.....do	7
458.15625	.....do	7, 20
458.16250	.....do	7, 16
458.16875	.....do	7, 20
458.1875	.....do	22
458.200	.....do	7
458.20625	.....do	7, 20
458.21250	.....do	7, 16
458.21875	.....do	7, 20
458.2375	.....do	22
458.250	.....do	7
458.25625	.....do	7, 20
458.26250	.....do	7, 16
458.26875	.....do	7, 20
458.2875	.....do	22
458.300	.....do	7
458.30625	.....do	7, 20
458.31250	.....do	7, 16
458.31875	.....do	7, 20
458.3375	.....do	22
458.350	.....do	7
458.35625	.....do	7, 20
458.36250	.....do	7, 16
458.36875	.....do	7, 20
458.3875	.....do	22
458.400	.....do	7
458.40625	.....do	7, 20
458.41250	.....do	7, 16
458.41875	.....do	7, 20
458.4375	.....do	22
458.450	.....do	7
458.45625	.....do	7, 20
458.46250	.....do	7, 16
458.46875	.....do	7, 20
458.4875	.....do	22
458.500	.....do	7
458.50625	.....do	7, 20
458.51250	.....do	7, 16
458.51875	.....do	7, 20
458.5375	.....do	22
458.550	.....do	7
458.55625	.....do	7, 20
458.56250	.....do	7, 16
458.56875	.....do	7, 20

FIRE RADIO SERVICE FREQUENCY TABLE—Continued

Frequency or band	Class of station(s)	Limitations
458.5875	do	22
458.600	do	7
458.60625	do	7, 20
458.61250	do	7, 16
458.61875	do	7, 20
458.6375	do	22
458.650	do	7
458.65625	do	7, 20
458.66250	do	7, 16
458.66875	do	7, 20
458.6875	do	22
458.700	do	7
458.70625	do	7, 20
458.71250	do	7, 16
458.71875	do	7, 20
458.7375	do	22
458.750	do	7
458.75625	do	7, 20
458.76250	do	7, 16
458.76875	do	7, 20
458.7875	do	22
458.800	do	7
458.80625	do	7, 20
458.81250	do	7, 16
458.81875	do	7, 20
458.8375	do	22
458.850	do	7
458.85625	do	7, 20
458.86250	do	7, 16
458.86875	do	7, 20
458.8875	do	22
458.900	do	7
458.90625	do	7, 20
458.91250	do	7, 16
458.91875	do	7, 20
458.9375	do	22
458.950	do	7
458.95625	do	7, 20
458.96250	do	7, 16
458.96875	do	7, 20
460.5125	Mobile	22
460.525	Base or mobile	8
460.53125	do	8, 20
460.53750	do	8, 16
460.54375	do	8, 20
460.550	do	8
460.55625	do	8, 20
460.56250	do	8, 16
460.56875	do	8, 20
460.575	do	
460.58125	do	20
460.58750	do	16
460.59375	do	20
460.600	do	
460.60625	do	20
460.61250	do	16
460.61875	do	20
460.625	do	
460.63125	do	20
460.63750	do	16
460.64375	do	20
465.5125	Mobile	22
465.525	do	8
465.53125	do	8, 20
465.53750	do	8, 16
465.54375	do	8, 20
465.550	do	8
465.55625	do	8, 20
465.56250	do	8, 16
465.56875	do	8, 20
465.575	do	
465.58125	do	20

FIRE RADIO SERVICE FREQUENCY TABLE—Continued

Frequency or band	Class of station(s)	Limitations
465.58750	.....do	16
465.59375	.....do	20
465.600	.....do	
465.60625	.....do	20
465.61250	.....do	16
465.61875	.....do	20
465.625	.....do	
465.63125	.....do	20
465.63750	.....do	16
465.64375	.....do	20
470–512	Base or mobile	9
806–824	Mobile	10
851–869	Base or mobile	10
928 and above	Operational fixed	11
929–930	Base only	15
1427 to 1435	Operational fixed, base or mobile	12
2450 to 2500	Base or mobile	13
10,550 to 10,680*	.....do	

*The frequencies in the band 10.55–1068 GHz are available for Digital Termination Systems and for associated internodal links in the Point-to-Point Microwave Radio Service. No new licenses will be issued under this subpart but current licenses will be renewed.

(c) * * *

(16) This frequency is not available in the 150–170 MHz band until August 18, 1996. This frequency will be assigned with an authorized bandwidth not to exceed 11.25 kHz. In the 450–470 MHz band, secondary telemetry operations pursuant to § 90.238(e) will be authorized on this frequency.

* * * * *

(20) This frequency is not available until August 18, 1996. After August 18, 1996 this frequency will be assigned with an authorized bandwidth not to exceed 6 kHz.

(21) Assignment of frequencies in this band are subject to the provisions of § 90.173

(22) This frequency is available for systems first licensed prior to August 18, 1995. No new systems will be authorized after August 18, 1995, but prior authorized systems may be modified, expanded, and renewed.

* * * * *

(e) * * *

(3) Frequencies in the 25–50 MHz, 150–170 MHz, 450–512 MHz and 902–928 MHz bands may be assigned for the operation of Location and Monitoring Service (LMS) systems in accordance with the provisions of subpart M of this part, notwithstanding this limitation.

* * * * *

5. Section 90.23 is amended by revising the table of frequencies in paragraph (b), revising limitation (18), and adding limitations (20), (21), (22), and (23) in paragraph (c), and revising paragraph (e)(2) to read as follows:

§ 90.23 Highway Maintenance Radio Service.

* * * * *

(b) * * *

HIGHWAY MAINTENANCE RADIO SERVICE FREQUENCY TABLE

Frequency or band	Class of station(s)	Limitations
Megahertz:		
33.02	Base or mobile	1
33.06	.....do	1
33.10	.....do	1
37.90	.....do	1
37.92	.....do	
37.94	.....do	1
37.96	.....do	
37.98	.....do	1
45.68	.....do	
45.72	.....do	
45.76	.....do	
45.80	.....do	
45.84	.....do	
47.02	.....do	2, 17
47.04	.....do	2, 17
47.06	.....do	2, 17
47.08	.....do	2, 17
47.10	.....do	2, 17
47.12	.....do	2, 17
47.14	.....do	2, 17
47.16	.....do	2, 17
47.18	.....do	2, 17
47.20	.....do	2, 17
47.22	.....do	2, 17
47.24	.....do	2, 17
47.26	.....do	2, 17

HIGHWAY MAINTENANCE RADIO SERVICE FREQUENCY TABLE—Continued

Frequency or band	Class of station(s)	Limitations
47.28	.....do	2, 17
47.30	.....do	2, 17
47.32	.....do	2, 17
47.34	.....do	2, 17
47.36	.....do	2, 17
47.38	.....do	2, 17
47.40	.....do	2, 17
72.00 to 76.00	Operational fixed	3
150 to 170	Base or mobile	21
150.995	.....do	4
151.0025	.....do	4, 18
151.010	.....do	4
151.0175	.....do	4, 18
151.025	.....do	4
151.0325	.....do	4, 18
151.040	.....do	4
151.0475	.....do	4, 18
151.055	.....do	4
151.070	.....do	4, 22
151.085	.....do	4
151.0925	.....do	4, 18
151.100	.....do	4
151.1075	.....do	4, 18
151.115	.....do	4
151.1225	.....do	4, 18
151.130	.....do	4
151.1375	.....do	4, 18
156.045	Mobile	14
156.0525	.....do	14, 18
156.060	.....do	14
156.0675	.....do	14, 18
156.075	.....do	
156.0825	.....do	18
156.105	Base or mobile	
156.1125	.....do	18
156.120	.....do	
156.1275	.....do	18
156.135	.....do	
156.1425	.....do	18
156.165	.....do	5, 14
156.1725	.....do	5, 14, 18
156.180	.....do	5, 14
156.1875	.....do	5, 14, 18
156.195	.....do	5
156.2025	.....do	5, 18
156.225	.....do	5
156.2325	.....do	5, 18
156.240	.....do	5
156.2475	.....do	5, 20
158.985	Mobile	5
158.9925	.....do	5, 18
159.000	.....do	5
159.0075	.....do	5, 18
159.015	.....do	5
159.0225	.....do	5, 18
159.045	.....do	5
159.0525	.....do	5, 18
159.060	.....do	5
159.0675	.....do	5, 18
159.075	.....do	5
159.0825	.....do	5, 18
159.105	Base or mobile	5
159.1125	.....do	5, 18
159.120	.....do	5
159.1275	.....do	5, 18
159.135	.....do	5
159.1425	.....do	5, 18
159.165	.....do	5
159.1725	.....do	5, 18
159.180	.....do	
159.1875	.....do	18
159.195	.....do	

HIGHWAY MAINTENANCE RADIO SERVICE FREQUENCY TABLE—Continued

Frequency or band	Class of station(s)	Limitations
159.2025	.....do	18
169–172	Mobile	15
220–222	Base and mobile	19
450–470	Fixed, base, or mobile	7, 21
453.0375	Mobile	23
453.050	Base or mobile	8
453.05625	.....do	8, 20
453.06250	.....do	8, 18
453.06875	.....do	8, 20
453.0875	Mobile	23
453.100	Base or mobile	8
453.10625	.....do	8, 20
453.11250	.....do	8, 18
453.11875	.....do	8, 20
453.1375	Mobile	23
453.150	Base or mobile	8
453.15625	.....do	8, 20
453.16250	.....do	8, 18
453.16875	.....do	8, 20
453.1875	Mobile	23
453.200	Base or mobile	8
453.20625	.....do	8, 20
453.21250	.....do	8, 18
453.21875	.....do	8, 20
453.2375	Mobile	23
453.250	Base or mobile	8
453.25625	.....do	8, 20
453.26250	.....do	8, 18
453.26875	.....do	8, 20
453.2875	Mobile	23
453.300	Base or mobile	8
453.30625	.....do	8, 20
453.31250	.....do	8, 18
453.31875	.....do	8, 20
453.3375	Mobile	23
453.350	Base or mobile	8
453.35625	.....do	8, 20
453.36250	.....do	8, 18
453.36875	.....do	8, 20
453.3875	Mobile	23
453.400	Base or mobile	8
453.40625	.....do	8, 20
453.41250	.....do	8, 18
453.41875	.....do	8, 20
453.4375	Mobile	23
453.450	Base or mobile	8
453.45625	.....do	8, 20
453.46250	.....do	8, 18
453.46875	.....do	8, 20
453.4875	Mobile	23
453.500	Base or mobile	8
453.50625	.....do	8, 20
453.51250	.....do	8, 18
453.51875	.....do	8, 20
453.5375	Mobile	23
453.550	Base or mobile	8
453.55625	.....do	8, 20
453.56250	.....do	8, 18
453.56875	.....do	8, 20
453.5875	Mobile	23
453.600	Base or mobile	8
453.60625	.....do	8, 20
453.61250	.....do	8, 18
453.61875	.....do	8, 20
453.6375	Mobile	23
453.650	Base or mobile	8
453.65625	.....do	8, 20
453.66250	.....do	8, 18
453.66875	.....do	8, 20
453.6875	Mobile	23
453.700	Base or mobile	9
453.70625	.....do	9, 20

HIGHWAY MAINTENANCE RADIO SERVICE FREQUENCY TABLE—Continued

Frequency or band	Class of station(s)	Limitations
453.71250	.....do	9, 18
453.71875	.....do	9, 20
453.7375	Mobile	23
453.750	Base or mobile	8
453.75625	.....do	8, 20
453.76250	.....do	8, 18
453.76875	.....do	8, 20
453.7875	Mobile	23
453.800	Base or mobile	8
453.80625	.....do	8, 20
453.81250	.....do	8, 18
453.81875	.....do	8, 20
453.8375	Mobile	23
453.850	Base or mobile	8
453.85625	.....do	8, 20
453.86250	.....do	8, 18
453.86875	.....do	8, 20
453.8875	Mobile	23
453.900	Base or mobile	8
453.90625	.....do	8, 20
453.91250	.....do	8, 18
453.91875	.....do	8, 20
453.9375	Mobile	23
453.950	Base or mobile	8
453.95625	.....do	8, 20
453.96250	.....do	8, 18
453.96875	.....do	8, 20
458.0375	Mobile	23
458.050	.....do	8
458.05625	.....do	8, 20
458.06250	.....do	8, 18
458.06875	.....do	8, 20
458.0875	.....do	23
458.100	.....do	8
458.10625	.....do	8, 20
458.11250	.....do	8, 18
458.11875	.....do	8, 20
458.1375	.....do	23
458.150	.....do	8
458.15625	.....do	8, 20
458.16250	.....do	8, 18
458.16875	.....do	8, 20
458.1875	.....do	23
458.200	.....do	8
458.20625	.....do	8, 20
458.21250	.....do	8, 18
458.21875	.....do	8, 20
458.2375	.....do	23
458.250	.....do	8
458.25625	.....do	8, 20
458.26250	.....do	8, 18
458.26875	.....do	8, 20
458.2875	.....do	23
458.300	.....do	8
458.30625	.....do	8, 20
458.31250	.....do	8, 18
458.31875	.....do	8, 20
458.3375	.....do	23
458.350	.....do	8
458.35625	.....do	8, 20
.		
458.36250	.....do	8, 18
458.36875	.....do	8, 20
458.3875	.....do	23
458.400	.....do	8
458.40625	.....do	8, 20
458.41250	.....do	8, 18
458.41875	.....do	8, 20
458.4375	.....do	23
458.450	.....do	8
458.45625	.....do	8, 20
458.46250	.....do	8, 18

HIGHWAY MAINTENANCE RADIO SERVICE FREQUENCY TABLE—Continued

Frequency or band	Class of station(s)	Limitations
458.46875	do	8, 20
458.4875	do	23
458.500	do	8
458.50625	do	8, 20
458.51250	do	8, 18
458.51875	do	8, 20
458.5375	do	23
458.550	do	8
458.55625	do	8, 20
458.56250	do	8, 18
458.56875	do	8, 20
458.5875	do	23
458.600	do	8
458.60625	do	8, 20
458.61250	do	8, 18
458.61875	do	8, 20
458.6375	do	23
458.650	do	8
458.65625	do	8, 20
458.66250	do	8, 18
458.66875	do	8, 20
458.6875	do	23
458.700	do	8
458.70625	do	8, 20
458.71250	do	8, 18
458.71875	do	8, 20
458.7375	do	23
458.750	do	8
458.75625	do	8, 20
458.76250	do	8, 18
458.76875	do	8, 20
458.7875	do	23
458.800	do	8
458.80625	do	8, 20
458.81250	do	8, 18
458.81875	do	8, 20
458.8375	do	23
458.850	do	8
458.85625	do	8, 20
458.86250	do	8, 18
458.86875	do	8, 20
458.8875	do	23
458.900	do	8
458.90625	do	8, 20
458.91250	do	8, 18
458.91875	do	8, 20
458.9375	do	23
458.950	do	8
458.95625	do	8, 20
458.96250	do	8, 18
458.96875	do	8, 20
470–512	Base or mobile	9
806–824	Mobile	10
851–869	Base or mobile	10
928 and above	Operational-fixed	11
929–930	Base only	16
1427–1435	Operational fixed, base or mobile	12
2450–2500	Base or mobile	13
10,550 to 10,680	do	

*The frequencies in the band 10.55–10.68 GHz are available for Digital Termination Systems and for associated internodal links in the Point-to-Point Microwave Radio Service. No new licenses will be issued under this Subpart but current licenses will be renewed.

(c) * * *

(18) This frequency is not available in the 150–170 MHz band until August 18, 1996. This frequency will be assigned with an authorized bandwidth not to exceed 11.25 kHz. In the 450–470 MHz band, secondary telemetry operations pursuant to § 90.238(e) will be authorized on this frequency.

* * * * *

(20) This frequency is not available until August 18, 1996. After August 18, 1996 this frequency will be assigned with an authorized bandwidth not to exceed 6 kHz.

(21) Assignment of frequencies in this band are subject to the provisions of § 90.173.

(22) This frequency will be authorized a channel bandwidth of 25 kHz.

(23) This frequency is available for systems first licensed prior to August 18, 1995. No new systems will be authorized after August 18, 1995, but prior authorized systems may be modified, expanded, and renewed.

* * * * *

(e) * * *

(2) Frequencies in the 25–50 MHz, 150–170 MHz, 450–512 MHz and 902–928 MHz bands may be assigned for the operation of Location and Monitoring Service (LMS) systems in accordance with the provisions of subpart M of this part, notwithstanding this limitation.

* * * * *

6. Section 90.25 is amended by revising the table of frequencies in paragraph (b), revising limitation (22), and adding limitations (24), (25), (26), and (27) in paragraph (c), and revising paragraph (e)(2) to read as follows:

§ 90.25 Forestry-Conservation Radio Service.

* * * * *

(b) * * *

FORESTRY-CONSERVATION RADIO SERVICE FREQUENCY TABLE

Frequency or band	Class of station(s)	Limitations
Kilohertz:		
2212	Base or mobile	1
2226	do	1
2236	do	1
2244	do	1
Megahertz:		
30.86	do	2
30.90	do	2
30.94	do	2
30.98	do	2
31.02	do	2
31.06	do	2, 3, 4
31.10	do	2, 3, 4
31.14	do	2, 3, 4
31.18	do	3, 4
31.22	do	3, 4
31.26	do	3, 4
31.30	do	3, 4
31.34	do	3, 4
31.38	do	3, 4
31.42	do	3, 4
31.46	do	3, 4
31.50	do	3, 4
31.54	do	3, 4
31.58	do	3, 4
31.62	do	3, 4
31.66	do	3, 4
31.70	do	3, 4
31.74	do	3, 4
31.78	do	3, 4
31.82	do	3, 4
31.86	do	3, 4
31.90	do	3, 4
31.94	do	3, 4
31.98	do	3, 4
44.64	do	
44.68	do	
44.72	do	
44.76	do	
44.80	do	
44.84	do	
44.88	do	
44.92	do	
44.96	do	
45.00	do	
45.04	do	
72.00 to 76.00	Operational fixed	5
150 to 170	Base or mobile	25
151.145	do	6
151.1525	do	6, 22
151.160	do	6
151.1675	do	6, 22
151.175	do	6
151.190	do	6, 26
151.205	do	6
151.2125	do	6, 22
151.220	do	6
151.2275	do	6, 22
151.235	do	6
151.2425	do	6, 22

FORESTRY-CONSERVATION RADIO SERVICE FREQUENCY TABLE—Continued

Frequency or band	Class of station(s)	Limitations
151.250	do	6
151.2575	do	6, 22
151.265	do	6
151.2725	do	6, 22
151.280	do	6
151.2875	do	6, 22
151.295	do	6
151.310	do	6, 26
151.325	do	6
151.3325	do	6, 22
151.340	do	6
151.3475	do	6, 22
151.355	do	6
151.3625	do	6, 22
151.370	do	6
151.3775	do	6, 22
151.385	do	6
151.3925	do	6, 22
151.400	do	6
151.4075	do	6, 22
151.415	do	6
151.4225	do	6, 22
151.430	do	6
151.4375	do	6, 22
151.445	do	6
151.4525	do	6, 22
151.460	do	6
151.4675	do	6, 22
151.475	do	6
151.4825	do	6, 22
151.490	do	6, 7
151.4975	do	6, 7, 22
159.225	do	
159.2325	do	22
159.240	do	8
159.2475	do	8, 22
159.255	do	8
159.2625	do	8, 22
159.270	do	8
159.2775	do	8, 22
159.285	do	8
159.2925	do	8, 22
159.300	do	8
159.3075	do	8, 22
159.315	do	8
159.3225	do	8, 22
159.330	do	8
159.3375	do	8, 22
159.345	do	8
159.3525	do	8, 22
159.360	do	8
159.3675	do	8, 22
159.375	do	8
159.3825	do	8, 22
159.390	do	8
159.3975	do	8, 22
159.405	do	8
159.4125	do	8, 22
159.420	do	8
159.4275	do	8, 22
159.435	do	8
159.4425	do	8, 22
159.450	do	
159.4575	do	22
159.465	do	
159.4725	do	22
169–172	Mobile	20
170.425	Base or mobile	4, 9, 10
170.475	do	4, 9, 11
170.575	do	4, 9, 10
171.425	do	4, 9, 11
171.475	do	4, 10, 12

FORESTRY-CONSERVATION RADIO SERVICE FREQUENCY TABLE—Continued

Frequency or band	Class of station(s)	Limitations
171.575	.....do	4, 9, 11
172.225	.....do	4, 9, 10
172.275	.....do	4, 11, 12
172.375	.....do	4, 9, 10
220–222	Base and mobile	23
450–470	Fixed, base or mobile	13, 25
453.0375	Mobile	27
453.050	Base or mobile	14
453.05625	.....do	14, 24
453.06250	.....do	14, 22
453.06875	.....do	14, 24
453.0875	Mobile	27
453.100	Base or mobile	14
453.10625	.....do	14, 24
453.11250	.....do	14, 22
453.11875	.....do	14, 24
453.1375	Mobile	27
453.150	Based or mobile	14
453.15625	.....do	14, 24
453.16250	.....do	14, 22
453.16875	.....do	14, 24
453.1875	Mobile	27
453.200	Base or mobile	14
453.20625	.....do	14, 24
453.21250	.....do	14, 22
453.21875	.....do	14, 24
453.2375	Mobile	27
453.250	Base or mobile	14
453.25625	.....do	14, 24
453.26250	.....do	14, 22
453.26875	.....do	14, 24
453.2875	Mobile	27
453.300	Base or mobile	14
453.30625	.....do	14, 24
453.31250	.....do	14, 22
453.31875	.....do	14, 24
453.3375	Mobile	27
453.350	Base or mobile	14
453.35625	.....do	14, 24
453.36250	.....do	14, 22
453.36875	.....do	14, 24
453.3875	Mobile	27
453.400	Base or mobile	14
453.40625	.....do	14, 24
453.41250	.....do	14, 22
453.41875	.....do	14, 24
453.4375	Mobile	27
453.450	Base or mobile	14
453.45625	.....do	14, 24
453.46250	.....do	14, 22
453.46875	.....do	14, 24
453.4875	Mobile	27
453.500	Base or mobile	14
453.50625	.....do	14, 24
453.51250	.....do	14, 22
453.51875	.....do	14, 24
453.5375	Mobile	27
453.550	Base or mobile	14
453.55625	.....do	14, 24
453.56250	.....do	14, 22
453.56875	.....do	14, 24
453.5875	Mobile	27
453.600	Base or mobile	14
453.60625	.....do	14, 24
453.61250	.....do	14, 22
453.61875	.....do	14, 24
453.6375	Mobile	27
453.650	Base or mobile	14
453.65625	.....do	14, 24
453.66250	.....do	14, 22
453.66875	.....do	14, 24
453.6875	Mobile	27

FORESTRY-CONSERVATION RADIO SERVICE FREQUENCY TABLE—Continued

Frequency or band	Class of station(s)	Limitations
453.700	Base or mobile	14
453.70625	.....do	14, 24
453.71250	.....do	14, 22
453.71875	.....do	14, 24
453.7375	Mobile	27
453.750	Base or mobile	14
453.75625	.....do	14, 24
453.76250	.....do	14, 22
453.76875	.....do	14, 24
453.7875	Mobile	27
453.800	Base or mobile	14
453.80625	.....do	14, 24
453.81250	.....do	14, 22
453.81875	.....do	14, 24
453.8375	Mobile	27
453.850	Base or mobile	14
453.85625	.....do	14, 24
453.86250	.....do	14, 22
453.86875	.....do	14, 24
453.8875	Mobile	27
453.900	Base or mobile	14
453.90625	.....do	14, 24
453.91250	.....do	14, 22
453.91875	.....do	14, 24
453.9375	Mobile	27
453.950	Base or mobile	14
453.95625	.....do	14, 24
453.96250	.....do	14, 22
453.96875	.....do	14, 24
458.0375	Mobile	27
458.050	.....do	14
458.05625	.....do	14, 24
458.06250	.....do	14, 22
458.06875	.....do	14, 24
458.0875	.....do	27
458.100	.....do	14
458.10625	.....do	14, 24
458.11250	.....do	14, 22
458.11875	.....do	14, 24
458.1375	.....do	27
458.150	.....do	14
458.15625	.....do	14, 24
458.16250	.....do	14, 22
458.16875	.....do	14, 24
458.1875	.....do	27
458.200	.....do	14
458.20625	.....do	14, 24
458.21250	.....do	14, 22
458.21875	.....do	14, 24
458.2375	.....do	27
458.250	.....do	14
458.25625	.....do	14, 24
458.26250	.....do	14, 22
458.26875	.....do	14, 24
458.2875	.....do	27
458.300	.....do	14
458.30625	.....do	14, 24
458.31250	.....do	14, 22
458.31875	.....do	14, 24
458.3375	.....do	27
458.350	.....do	14
458.35625	.....do	14, 24
458.36250	.....do	14, 22
458.36875	.....do	14, 24
458.3875	.....do	27
458.400	.....do	14
458.40625	.....do	14, 24
458.41250	.....do	14, 22
458.41875	.....do	14, 24
458.4375	.....do	27
458.450	.....do	14
458.45625	.....do	14, 24

FORESTRY-CONSERVATION RADIO SERVICE FREQUENCY TABLE—Continued

Frequency or band	Class of station(s)	Limitations
458.46250	do	14, 22
458.46875	do	14, 24
458.4875	do	27
458.500	do	14
458.50625	do	14, 24
458.51250	do	14, 22
458.51875	do	14, 24
458.5375	do	27
458.550	do	14
458.55625	do	14, 24
458.56250	do	14, 22
458.56875	do	14, 24
458.5875	do	27
458.600	do	14
458.60625	do	14, 24
458.61250	do	14, 22
458.61875	do	14, 24
458.6375	do	27
458.650	do	14
458.65625	do	14, 24
458.66250	do	14, 22
458.66875	do	14, 24
458.6875	do	27
458.700	do	14
458.70625	do	14, 24
458.71250	do	14, 22
458.71875	do	14, 24
458.7375	do	27
458.750	do	14
458.75625	do	14, 24
458.76250	do	14, 22
458.76875	do	14, 24
458.7875	do	27
458.800	do	14
458.80625	do	14, 24
458.81250	do	14, 22
458.81875	do	14, 24
458.8375	do	27
458.850	do	14
458.85625	do	14, 24
458.86250	do	14, 22
458.86875	do	14, 24
458.8875	do	27
458.900	do	14
458.90625	do	14, 24
458.91250	do	14, 22
458.91875	do	14, 24
458.9375	do	27
458.950	do	14
458.95625	do	14, 24
458.96250	do	14, 22
458.96875	do	14, 24
470 to 512	Base or mobile	15
806 to 824	Mobile	16
851 to 869	Base or Mobile	16
928 and above	Operational fixed	17
929 to 930	Base only	21
1427 to 1435	Operational fixed, base or mobile	18
2450 to 2500	Base or mobile	19
10,550 to 10,680*	do	

*The frequencies in the band 10.55–10.68 GHz are available for Digital Termination Systems and for associated internodal links in the Point-to-Point Microwave Radio Service. No new licenses will be issued under this Subpart but current licenses will be renewed.

(c) * * *

(22) This frequency is not available in the 150–170 MHz band until August 18, 1996. This frequency will be assigned with an authorized bandwidth not to exceed 11.25 kHz. In the 450–470 MHz band, secondary telemetry operations pursuant to § 90.238(e) will be authorized on this frequency.

* * * * *

(24) This frequency is not available until August 18, 1996. After August 18, 1996 this frequency will be assigned with an authorized bandwidth not to exceed 6 kHz.

(25) Assignment of frequencies in this band are subject to the provisions of § 90.173.

(26) This frequency will be authorized a channel bandwidth of 25 kHz.

(27) This frequency is available for systems first licensed prior to August 18, 1995. No new systems will be authorized after August 18, 1995, but prior authorized systems may be modified, expanded, and renewed.

* * * * *

(e) * * *

(2) Frequencies in the 25–50 MHz, 150–170 MHz, 450–512 MHz and 902–928 MHz bands may be assigned for the operation of Location and Monitoring Service (LMS) systems in accordance with the provisions of subpart M of this part, notwithstanding this limitation.

* * * * *

7. Section 90.27 is amended by revising the table of frequencies in paragraph (b), revising limitation (2) and (11), removing and reserving limitation (12), revising the introductory text and paragraphs (i) and (ii) of limitation (13), and adding limitations (27) and (28) in paragraph (c) to read as follows:

§ 90.27 Emergency Medical Radio Service.

* * * * *

(b) * * *

EMERGENCY MEDICAL RADIO SERVICE FREQUENCY TABLE

Frequency or band	Class of station(s)	Limitations
Megahertz:		
72.00 to 76.00	Operational fixed	1
150 to 170	Base or mobile	28
150.775	Mobile.	
150.7825	.....do	2
150.790	.....do	
150.7975	.....do	
150.805	.....do	
155.325	Base or mobile	3, 4
155.3325	.....do	2, 3, 4
155.340	.....do	4, 5
155.3475	.....do	2, 4, 5
155.355	.....do	3, 4
155.3625	.....do	2, 3, 4
155.385	.....do	3, 4
155.3925	.....do	2, 3, 4
155.400	.....do	3, 4
155.4075	.....do	2, 3, 4
169–172	Mobile	6
220.9025	Base	25
220.9075	.....do	25
220.9125	.....do	25
220.9175	.....do	25
220.9225	.....do	25
221.9025	Mobile	25
221.9075	.....do	25
221.9125	.....do	25
221.9175	.....do	25
221.9225	.....do	25
450 to 470	Fixed, base, or mobile	7, 28
453.025	Base	9, 19, 22, 26
453.03125	.....do	9, 19, 22, 26, 27
453.03750	.....do	2, 9, 19, 22, 26
453.04375	.....do	9, 19, 22, 26, 27
453.050	Base or mobile	8
453.05625	.....do	8, 27
453.06250	.....do	2, 8
453.06875	.....do	8, 27
453.075	Base	9, 19, 22, 26
453.08125	.....do	9, 19, 22, 26, 27
453.08750	.....do	2, 9, 19, 22, 26
453.09375	.....do	9, 19, 22, 26, 27
453.100	Base or mobile	8
453.10625	.....do	8, 27
453.11250	.....do	2, 8
453.11875	.....do	8, 27
453.125	Base	9, 19, 22, 26
453.13125	.....do	9, 19, 22, 26, 27
453.13750	.....do	2, 9, 19, 22, 26
453.14375	.....do	9, 19, 22, 26, 27
453.150	Base or mobile	8
453.15625	.....do	8, 27
453.16250	.....do	2, 8
453.16875	.....do	8, 27
453.175	Base	9, 19, 22, 26
453.18125	.....do	9, 19, 22, 26, 27
453.18750	.....do	2, 9, 19, 22, 26
453.19375	.....do	9, 19, 22, 26, 27
453.200	Base or mobile	8
453.20625	.....do	8, 27

EMERGENCY MEDICAL RADIO SERVICE FREQUENCY TABLE—Continued

Frequency or band	Class of station(s)	Limitations
453.21250	do	2, 8
453.21875	do	8, 27
453.250	do	8
453.25625	do	8, 27
453.26250	do	2, 8
453.26875	do	8, 27
453.300	do	8
453.30625	do	8, 27
453.31250	do	2, 8
453.31875	do	8, 27
453.350	do	8
453.35625	do	8, 27
453.36250	do	2, 8
453.36875	do	8, 27
453.400	do	8
453.40625	do	8, 27
453.41250	do	2, 8
453.41875	do	8, 27
453.450	do	8
453.45625	do	8, 27
453.46250	do	2, 8
453.46875	do	8, 27
453.500	do	8
453.50625	do	8, 27
453.51250	do	2, 8
453.51875	do	8, 27
453.550	do	8
453.55625	do	8, 27
453.56250	do	2, 8
453.56875	do	8, 27
453.600	do	8
453.60625	do	8, 27
453.61250	do	2, 8
453.61875	do	8, 27
453.650	do	8
453.65625	do	8, 27
453.66250	do	2, 8
453.66875	do	8, 27
453.700	do	8
453.70625	do	8, 27
453.71250	do	2, 8
453.71875	do	8, 27
453.750	do	8
453.75625	do	8, 27
453.76250	do	2, 8
453.76875	do	8, 27
453.800	do	8
453.80625	do	8, 27
453.81250	do	2, 8
453.81875	do	8, 27
453.850	do	8
453.85625	do	8, 27
453.86250	do	2, 8
453.86875	do	8, 27
453.900	do	8
453.90625	do	8, 27
453.91250	do	2, 8
453.91875	do	8, 27
453.950	do	8
453.95625	do	8, 27
453.96250	do	2, 8
453.96875	do	8, 27
458.025	Mobile	9, 22, 26
458.03125	do	9, 22, 26, 27
458.03750	do	2, 9, 22, 26
458.04375	do	9, 22, 26, 27
458.050	do	8
458.05625	do	8, 27
458.06250	do	2, 8
458.06875	do	8, 27
458.075	do	9, 22, 26
458.08125	do	9, 22, 26, 27

EMERGENCY MEDICAL RADIO SERVICE FREQUENCY TABLE—Continued

Frequency or band	Class of station(s)	Limitations
458.08750	do	2, 9, 22, 26
458.09375	do	9, 22, 26, 27
458.100	do	8
458.10625	do	8, 27
458.11250	do	2, 8
458.11875	do	8, 27
458.125	do	9, 22, 26
458.13125	do	9, 22, 26, 27
458.13750	do	2, 9, 22, 26
458.14375	do	9, 22, 26, 27
458.150	do	8
458.15625	do	8, 27
458.16250	do	2, 8
458.16875	do	8, 27
458.175	do	9, 22, 26
458.18125	do	9, 22, 26, 27
458.18750	do	2, 9, 22, 26
458.19375	do	9, 22, 26, 27
458.200	do	8
458.20625	do	8, 27
458.21250	do	2, 8
458.21875	do	8, 27
458.250	do	8
458.25625	do	8, 27
458.26250	do	2, 8
458.26875	do	8, 27
458.300	do	8
458.30625	do	8, 27
458.31250	do	2, 8
458.31875	do	8, 27
458.350	do	8
458.35625	do	8, 27
458.36250	do	2, 8
458.36875	do	8, 27
458.400	do	8
458.40625	do	8, 27
458.41250	do	2, 8
458.41875	do	8, 27
458.450	do	8
458.45625	do	8, 27
458.46250	do	2, 8
458.46875	do	8, 27
458.500	do	8
458.50625	do	8, 27
458.51250	do	2, 8
458.51875	do	8, 27
458.550	do	8
458.55625	do	8, 27
458.56250	do	2, 8
458.56875	do	8, 27
458.600	do	8
458.60625	do	8, 27
458.61250	do	2, 8
458.61875	do	8, 27
458.650	do	8
458.65625	do	8, 27
458.66250	do	2, 8
458.66875	do	8, 27
458.700	do	8
458.70625	do	8, 27
458.71250	do	2, 8
458.71875	do	8, 27
458.750	do	8
458.75625	do	8, 27
458.76250	do	2, 8
458.76875	do	8, 27
458.800	do	8
458.80625	do	8, 27
458.81250	do	2, 8
458.81875	do	8, 27
458.850	do	8
458.85625	do	8, 27

EMERGENCY MEDICAL RADIO SERVICE FREQUENCY TABLE—Continued

Frequency or band	Class of station(s)	Limitations
458.86250	do	2, 8
458.86875	do	8, 27
458.900	do	8
458.90625	do	8, 27
458.91250	do	2, 8
458.91875	do	8, 27
458.950	do	8
458.95625	do	8, 27
458.96250	do	2, 8
458.96875	do	8, 27
460.525	Base or mobile	10
460.53125	do	10, 27
460.53750	do	2, 10
460.54375	do	10, 27
460.550	do	10
460.55625	do	10, 27
460.56250	do	2, 10
460.56875	do	10, 27
462.950	do	3, 11
462.95625	do	3, 11, 27
462.96250	do	2, 3, 11
462.96875	do	3, 11, 27
462.975	do	3, 11
462.98125	do	3, 11, 27
462.98750	do	2, 3, 11
462.99375	do	3, 11, 27
463.000	do	9, 13, 20
463.00625	do	9, 13, 20, 27
463.01250	do	2, 9, 13, 20
463.01875	do	9, 13, 20, 27
463.025	do	9, 13, 20
463.03125	do	9, 13, 20, 27
463.03750	do	2, 9, 13, 20
463.04375	do	9, 13, 20, 27
463.050	do	9, 13, 20
463.05625	do	9, 13, 20, 27
463.06250	do	2, 9, 13, 20
463.06875	do	9, 13, 20, 27
463.075	do	9 ,13, 21
463.08125	do	9, 13, 21, 27
463.08750	do	2, 9, 13, 21
463.09375	do	9, 13, 21, 27
463.100	do	9, 13, 21
463.10625	do	9, 13, 21, 27
463.11250	do	2, 9, 13, 21
463.11875	do	9, 13, 21, 27
463.125	do	9, 13, 21
463.13125	do	9, 13, 21, 27
463.13750	do	2, 9, 13, 21
463.14375	do	9, 13, 21, 27
463.150	do	9, 13, 21
463.15625	do	9, 13, 21, 27
463.16250	do	2, 9, 13, 21
463.16875	do	9, 13, 21, 27
463.175	do	9, 13, 21
463.18125	do	9, 13, 21, 27
463.18750	do	2, 9, 13, 21
463.19375	do	9, 13, 21, 27
465.525	Mobile	10
465.53125	do	10, 27
465.53750	do	2, 10
465.54375	do	10, 27
465.550	do	10
465.55625	do	10, 27
465.56250	do	2, 10
465.56875	do	10, 27
467.950	do	3, 11
467.95625	do	3, 11, 27
467.96250	do	2, 3, 11
467.96875	do	3, 11, 27
467.975	do	3, 11
467.98125	do	3, 11, 27

EMERGENCY MEDICAL RADIO SERVICE FREQUENCY TABLE—Continued

Frequency or band	Class of station(s)	Limitations
467.98750	.....do	2, 3, 11
467.99375	.....do	3, 11, 27
468.000	.....do	9, 13, 20
468.00625	.....do	9, 13, 20, 27
468.01250	.....do	2, 9, 13, 20
468.01875	.....do	9, 13, 20, 27
468.025	.....do	9, 13, 20
468.03125	.....do	9, 13, 20, 27
468.03750	.....do	2, 9, 13, 20
468.04375	.....do	9, 13, 20, 27
468.050	.....do	9, 13, 20
468.05625	.....do	9, 13, 20, 27
468.06250	.....do	2, 9, 13, 20
468.06875	.....do	9, 13, 20, 27
468.075	.....do	9, 13, 21
468.08125	.....do	9, 13, 21, 27
468.08750	.....do	2, 9, 13, 21
468.09375	.....do	9, 13, 21, 27
468.100	.....do	9, 13, 21
468.10625	.....do	9, 13, 21, 27
468.11250	.....do	2, 9, 13, 21
468.11875	.....do	9, 13, 21, 27
468.125	.....do	9, 13, 21
468.13125	.....do	9, 13, 21, 27
468.13750	.....do	2, 9, 13, 21
468.14375	.....do	9, 13, 21, 27
468.150	.....do	9, 13, 21
468.15625	.....do	9, 13, 21, 27
468.16250	.....do	2, 9, 13, 21
468.16875	.....do	9, 13, 21, 27
468.175	.....do	9, 13, 21
468.18125	.....do	9, 13, 21, 27
468.18750	.....do	2, 9, 13, 21
468.19375	.....do	9, 13, 21, 27
470 to 512	Base or Mobile	14
806 to 824	Mobile	15
851 to 869	Base or Mobile	15
928 and above	Operational fixed	16
929 to 930	Base only	24
1427 to 1435	Operational fixed base or mobile	17
2450 to 2500	Base or Mobile	18
10,550 to 10,680	.....do	23

(c) * * *

(2) This frequency is not available in the 150–170 MHz band until August 18, 1996. This frequency will be assigned with an authorized bandwidth not to exceed 11.25 kHz. In the 450–470 MHz band, secondary telemetry operations pursuant to § 90.238(e) will be authorized on this frequency.

* * * * *

(11) This frequency is primarily authorized for use in the dispatch of medical care vehicles and personnel for the rendition or delivery of medical services. This frequency may also be assigned for intra-system and inter-system mutual assistance purposes. For uniformity in usage these frequency pairs may be referred to by channel name as follows:

Frequencies base and mobile (Megahertz)	Mobile only (MHz)	Channel name
462.950	467.950	MED–9
462.95625	467.95625	
462.9625	467.9625	
462.96875	467.96875	
462.975	467.975	MED–10
462.98125	467.98125	
462.9875	467.9875	
462.99375	467.99375	

(12) [Reserved]

(13) For applications for new radio systems received after August 15, 1974, the thirty-two frequency pairs listed in paragraph (c)(13)(i) of this section will be assigned in a block for shared operation under § 90.27(a) subject to the following:

(i) For uniformity in usage, these frequency pairs may be referred to by channel name as follows:

Frequencies base and mobile (Megahertz)	Mobile only (MHz)	Channel name
463.000	468.000	MED–1
463.00625	468.00625	MED–A
463.0125	468.0125	MED–B
463.01875	468.01875	MED–C
463.025	468.025	MED–2
463.03125	468.03125	MED–D
463.0375	468.0375	MED–E
463.04375	468.04375	MED–F
463.050	468.050	MED–3
463.05625	468.05625	MED–G
463.0625	468.0625	MED–H
463.06875	468.06875	MED–I
46.075	46.075	MED–4
463.08125	468.08125	MED–J
463.0875	468.0875	MED–K
463.09375	468.09375	MED–L
463.100	468.100	MED–5
463.10625	468.10625	MED–M
463.1125	468.1125	MED–N
463.11875	468.11875	MED–O
463.125	468.125	MED–6
463.13125	468.13125	MED–P

Frequencies base and mobile (Megahertz)	Mobile only (MHz)	Channel name
463.1375	468.1375	MED–Q
463.14375	468.14375	MED–R
463.150	468.150	MED–7
463.15625	468.15625	MED–S
463.1625	468.1625	MED–T
463.16875	468.16875	MED–U
463.175	468.175	MED–8
463.18125	468.18125	MED–V
463.1875	468.1875	MED–W
463.19375	468.19375	MED–X

(ii) Except as provided in paragraphs (c)(13) (iii) and (iv) of this section, mobile or portable stations must employ equipment that is both wired and equipped to transmit/receive, respectively, on each of these

MED frequency pairs with transmitters operated on the 468 MHz frequencies.

* * * * *

(27) This frequency is not available until August 18, 1996. After August 18, 1996 this frequency will be assigned with an authorized bandwidth not to exceed 6 kHz.

(28) Assignment of frequencies in this band are subject to the provisions of § 90.173.

8. Section 90.53 is amended by revising the table of frequencies in paragraph (a), revising limitation (30), and adding limitations (35), (36), (37), and (38) in paragraph (b), and revising paragraph (d)(5) to read as follows:

§ 90.53 Frequencies available.

(a) * * *

SPECIAL EMERGENCY SERVICE FREQUENCY TABLE

Frequency or band	Class of station(s)	Limitations
Kilohertz:		
2000–3000	Fixed	
2726	Base or mobile	2
3201	.....do	
Megahertz:		
33.02	.....do	3, 25
33.04	.....do	25
33.06	.....do	3, 25
33.08	.....do	25
33.10	.....do	3, 25
35.02	Mobile	27
35.64	Base	4
35.68	.....do	4
37.90	Base or mobile	3, 25
37.94	.....do	3, 25
37.98	.....do	3, 25
43.64	Base	4, 28
43.68	.....do	4
45.92	Base or mobile	25
45.96	.....do	25
46.00	.....do	25
46.04	.....do	25
47.42	.....do	5, 25
47.46	.....do	25
47.50	.....do	25
47.54	.....do	25
47.58	.....do	25
47.62	.....do	25
47.66	.....do	25
72.00 to 76.00	Operational fixed	6
150 to 170	Base or mobile	36
152.0075	Base	4, 31, 37
155.160	Base or mobile	25
155.1675	.....do	25, 30
155.175	.....do	25
155.1825	.....do	25, 30
155.205	.....do	25
155.2125	.....do	25, 30
155.220	.....do	25
155.2275	.....do	25, 30
155.235	.....do	25
155.2425	.....do	25, 30
155.265	.....do	25
155.2725	.....do	25, 30
155.280	.....do	25
155.2875	.....do	25, 30
155.295	.....do	25
155.3025	.....do	25, 30
157.450	.....do	4, 11, 37
163.250	.....do	4, 37
169–172	Mobile	33
450–470	Fixed, base, or mobile	12, 36
453.0125	Mobile	38
453.025	Base	26
453.03125	.....do	26, 35
453.03750	.....do	26, 30

SPECIAL EMERGENCY SERVICE FREQUENCY TABLE—Continued

Frequency or band	Class of station(s)	Limitations
453.04375	.....do	26, 35
453.075	.....do	26
453.08125	.....do	26, 35
453.08750	.....do	26, 30
453.09375	.....do	26, 35
453.125	.....do	26
453.13125	.....do	26, 35
453.13750	.....do	26, 30
453.14375	.....do	26, 35
453.175	.....do	26
453.18125	.....do	26, 35
453.18750	.....do	26, 30
453.19375	.....do	26, 35
458.0375	Mobile	38
458.0625	.....do	38
458.0875	.....do	38
458.1125	.....do	38
458.1375	.....do	38
458.1625	.....do	38
458.1875	.....do	38
460.5125	.....do	38
460.5375	.....do	38
460.5625	.....do	38
462.9375	.....do	38
462.9625	.....do	38
462.9875	.....do	38
462.0125	.....do	38
462.0375	.....do	38
462.0625	.....do	38
462.0875	.....do	38
462.1125	.....do	38
462.1375	.....do	38
462.1625	.....do	38
462.1775	.....do	38
465.5125	.....do	38
465.5375	.....do	38
465.5625	.....do	38
467.9375	.....do	38
467.9625	.....do	38
467.9875	.....do	38
467.0125	.....do	38
467.0375	.....do	38
467.0625	.....do	38
467.0875	.....do	38
467.1125	.....do	38
467.1375	.....do	38
467.1625	.....do	38
467.1875	.....do	38
806 to 824	Mobile	21
851 to 869	Base or mobile	21
928 and above	Operational fixed	22
929 to 930	Base only	7
1427 to 1435	Operational fixed, base or mobile	23
2450 to 2500	Base or mobile	24
10,550 to 10,680	.....do	9

(b) * * *

(30) This frequency is not available in the 150–170 MHz band until August 18, 1996. This frequency will be assigned with an authorized bandwidth not to exceed 11.25 kHz. In the 450–470 MHz band, secondary telemetry operations pursuant to § 90.238(e) will be authorized on this frequency.

* * * * *

(35) This frequency is not available until August 18, 1996. After August 18, 1996 this frequency will be assigned with an authorized bandwidth not to exceed 6 kHz.

(36) Assignment of frequencies in this band are subject to the provisions of § 90.173.

(37) This frequency will be authorized a channel bandwidth of 25 kHz.

(38) This frequency is available for systems first licensed prior to August 18, 1995. No new systems will be authorized after August 18, 1995, but prior authorized systems may be modified, expanded, and renewed.

* * * * *

(d) * * *

(5) Frequencies in the 25–50 MHz, 150–170 MHz, 450–512 MHz and 902–928 MHz bands may be assigned for the operation of Location and Monitoring Service (LMS) systems in accordance with the provisions of subpart M of this part, notwithstanding this limitation.

9. Section 90.63 is amended by revising the table of frequencies in paragraph (c), revising limitation (24), and adding limitations (28), (29) and (30) in paragraph (d), and revising paragraph (f)(3) to read as follows:

§ 90.63 Power Radio Service.

* * * * *

(c) * * *

POWER RADIO SERVICE FREQUENCY TABLE

Frequency or band	Class of station(s)	Limitations
Kilohertz:		
2000 to 25,000	Fixed, base or mobile	1
2292	Base or mobile	1
2398	do	1
4637.5	do	1
Megahertz:		
37.46	do	
37.48	do	
37.50	do	
37.52	do	
37.54	do	
37.56	do	
37.58	do	
37.60	Base, mobile or operational fixed	2
37.62	Base or mobile	
37.64	do	
37.66	do	
37.68	do	
37.70	do	
37.72	do	
37.74	do	
37.76	do	
37.78	do	
37.80	do	
37.82	do	
37.84	Operational fixed, base or mobile	2
37.86	Base or mobile	
47.70	do	
47.72	do	
47.74	do	
47.76	do	
47.78	do	
47.80	do	
47.82	do	
47.84	do	
47.86	do	
47.88	do	
47.90	do	
47.92	do	
47.94	do	
47.96	do	
47.98	do	
48.00	do	
48.02	do	
48.04	do	
48.06	do	
48.08	do	
48.10	do	
48.12	do	
48.14	do	
48.16	do	
48.18	do	
48.20	do	
48.22	do	
48.24	do	
48.26	do	
48.28	do	
48.30	do	
48.32	do	
48.34	do	
48.36	do	
48.38	do	
48.40	do	
48.42	do	
48.44	do	
48.46	do	
48.48	do	
48.50	do	

POWER RADIO SERVICE FREQUENCY TABLE—Continued

Frequency or band	Class of station(s)	Limitations
48.52	.....do	
48.54	.....do	
72.00 to 76.00	Operational fixed	3
74.61	Mobile	27
74.63	.....do	27
74.65	.....do	27
74.67	.....do	27
74.69	.....do	27
74.71	.....do	27
74.73	.....do	27
74.75	.....do	27
74.77	.....do	27
74.79	.....do	27
75.21	.....do	27
75.23	.....do	27
75.25	.....do	27
75.27	.....do	27
75.29	.....do	27
75.31	.....do	27
75.33	.....do	27
75.35	.....do	27
75.37	.....do	27
75.39	.....do	27
150 to 170	Base or mobile	29
153.410	.....do	
153.4175	.....do	24
153.425	.....do	4
153.4325	.....do	4, 24
153.440	.....do	5
153.4475	.....do	5, 24
153.455	.....do	4
153.4625	.....do	4, 24
153.470	.....do	
153.4775	.....do	24
153.485	.....do	4
153.4925	.....do	4, 24
153.500	.....do	5
153.5075	.....do	5, 24
153.515	.....do	4
153.5225	.....do	4, 24
153.530	.....do	
153.5375	.....do	24
153.545	.....do	4
153.5525	.....do	4, 24
153.560	.....do	5
153.5675	.....do	5, 24
153.575	.....do	4
153.5825	.....do	4, 24
153.590	.....do	
153.5975	.....do	24
153.605	.....do	4
153.6125	.....do	4, 24
153.620	.....do	5
153.6275	.....do	5, 24
153.635	.....do	4
153.6425	.....do	4, 24
153.650	.....do	
153.6575	.....do	24
153.665	.....do	4
153.6725	.....do	4, 24
153.680	.....do	5
153.6875	.....do	5, 24
153.695	.....do	
153.7025	.....do	24
153.710	.....do	
153.7175	.....do	24
153.725	.....do	
153.7325	.....do	24
154.45625	Fixed or mobile	7, 21, 22, 23
154.46375	.....do	6, 7, 21
154.47125	.....do	7, 11, 21, 22
154.47875	.....do	7, 21, 22, 23

POWER RADIO SERVICE FREQUENCY TABLE—Continued

Frequency or band	Class of station(s)	Limitations
158.1225	Base or mobile	28
158.130	do	
158.1375	do	24
158.145	do	8
158.1525	do	8, 24
158.160	do	9
158.1675	do	9, 24
158.175	do	8
158.1825	do	8, 24
158.190	do	
158.1975	do	24
158.205	do	8, 24
158.2125	do	8
158.220	do	9, 24
158.2275	do	9
158.235	do	8, 24
158.2425	do	8
158.250	do	
158.2575	do	24
158.265	do	8
158.2725	do	8, 24
169–172	Mobile, operational fixed	10
173.20375	Fixed or mobile	7, 11, 21, 22
173.2100	do	11, 12, 21, 22
173.2375	do	7, 21, 22, 23
173.250	Base or mobile	9
173.2625	Fixed or mobile	7, 21, 22, 23
173.2875	do	7, 21, 22, 23
173.300	Base or mobile	9
173.3125	Fixed or mobile	7, 21, 22, 23
173.3375	do	7, 21, 22, 23
173.350	Base or mobile	9
173.3625	Fixed or mobile	7, 21, 22, 23
173.3900	do	11, 12, 21, 22
173.39625	do	7, 11, 21, 22
216–220	Base and mobile	13
220–222	Base and mobile	26
406–413	Operational fixed	10
450–470	Fixed, base, or mobile	14, 29
451.01875	Base or mobile	28
451.025	do	
451.03125	do	28
451.03750	do	24
451.04375	do	28
451.050	do	
451.05625	do	28
451.06250	do	24
451.06875	do	28
451.075	do	
451.08125	do	28
451.08750	do	24
451.09375	do	28
451.100	do	
451.10625	do	28
451.11250	do	24
451.11875	do	28
451.125	do	
451.13125	do	28
451.13750	do	24
451.14375	do	28
451.150	do	
451.15625	do	28
451.16250	do	24
451.16875	do	28
451.175	do	15
451.18125	do	15, 28
451.18750	do	15, 24
451.19375	do	15, 28
451.200	do	
451.20625	do	28
451.21250	do	24
451.21875	do	28

POWER RADIO SERVICE FREQUENCY TABLE—Continued

Frequency or band	Class of station(s)	Limitations
451.225	.....do	15
451.23125	.....do	15, 28
451.23750	.....do	15, 24
451.24375	.....do	15, 28
451.250	.....do	
451.25625	.....do	28
451.26250	.....do	24
451.26875	.....do	28
451.275	.....do	15
451.28125	.....do	15, 28
451.28750	.....do	15, 24
451.29375	.....do	15, 28
451.3625	Mobile	30
451.375	Base and mobile	15
451.38125	.....do	28
451.38750	.....do	24
.		
451.39375	.....do	28
451.4125	Mobile	30
451.425	Base or mobile	15
451.431251	.....do	15, 28
451.43750	.....do	15, 24
451.44375	.....do	15, 28
451.4625	Mobile	30
451.475	Base or mobile	15
451.48125	.....do	28
451.48750	.....do	24
451.49375	.....do	28
451.5125	Mobile	30
451.525	Base or mobile	15
451.53125	.....do	15, 28
451.53750	.....do	15, 24
451.54375	.....do	15, 28
451.5625	Mobile	30
451.575	Base or mobile	15
451.58125	.....do	15, 28
451.58750	.....do	15, 24
451.59375	.....do	15, 28
451.6125	Mobile	30
451.625	Base or mobile	15
451.63125	.....do	15, 28
451.63750	.....do	15, 24
451.64375	.....do	15, 28
451.6625	Mobile	30
451.675	Base or mobile	15
451.68125	.....do	15, 28
451.68750	.....do	15, 24
451.69375	.....do	15, 28
456.01875	.....do	28
456.025	Mobile	
456.03125	.....do	28
456.03750	.....do	24
456.04375	.....do	28
456.050	.....do	
456.05625	.....do	28
456.06250	.....do	24
456.06875	.....do	28
456.075	.....do	
456.08125	.....do	28
456.08750	.....do	24
456.09375	.....do	28
456.100	.....do	
456.10625	.....do	28
456.11250	.....do	24
456.11875	.....do	28
456.125	.....do	
456.13125	.....do	28
456.13750	.....do	24
456.14375	.....do	28
456.150	.....do	
456.15625	.....do	28
456.16250	.....do	24

POWER RADIO SERVICE FREQUENCY TABLE—Continued

Frequency or band	Class of station(s)	Limitations
456.16875	do	28
456.175	do	15
456.18125	do	15, 28
456.18750	do	15, 24
456.19375	do	15, 28
456.200	do	
456.20625	do	28
456.21250	do	24
456.21875	do	28
456.225	do	15
456.23125	do	15, 28
456.23750	do	15, 24
456.24375	do	15, 28
456.250	do	
456.25625	do	28
456.26250	do	24
456.26875	do	28
456.275	do	15
456.28125	do	15, 28
456.28750	do	15, 24
456.29375	do	15, 28
456.3625	Mobile	30
456.375	do	15
456.38125	do	15, 28
456.38750	do	15, 24
456.39375	do	15, 28
456.4125	do	30
456.425	do	15
456.43125	do	15, 28
456.43750	do	15, 24
456.44375	do	15, 28
456.4625	do	30
456.475	do	15
456.48125	do	15, 28
456.48750	do	15, 24
456.49375	do	15, 28
456.5125	do	30
456.525	do	15
456.53125	do	15, 28
456.53750	do	15, 24
456.54375	do	15, 28
456.5625	do	30
456.575	do	15
456.58125	do	15, 28
456.58750	do	15, 24
456.59375	do	15, 28
456.6125	do	30
456.625	do	15
456.63125	do	15, 28
456.63750	do	15, 24
456.64375	do	15, 28
456.6625	do	30
456.675	do	15
456.68125	do	15, 28
456.68750	do	15, 24
456.69375	do	15, 28
462.4625	do	30
462.475	Base or mobile	15
462.48125	do	15, 28
462.48750	do	15, 24
462.49375	do	15, 28
462.5125	Mobile	30
462.525	Base or mobile	15
462.53125	do	15, 28
467.4625	Mobile	30
467.475	do	15
467.48125	do	15, 28
467.48750	do	15, 24
467.49375	do	15, 28
467.5125	do	30
467.525	do	15
467.53125	do	15, 28

POWER RADIO SERVICE FREQUENCY TABLE—Continued

Frequency or band	Class of station(s)	Limitations
470 to 512	Base or mobile	16
806 to 821	Mobile	17
851 to 866	Base or mobile	17
896 to 901	Mobile	17
928 and above	Operational fixed	18
929–930	Base only	25
935 to 940	Base or mobile	17
1427 to 1435	Base, mobile or operational fixed	13
2450 to 2500	Base or mobile	19
8400 to 8500	.....do	20
10,550 to 10,680*	.....do	

*The frequencies in the band 10.55–10.68 GHz are available for Digital Termination Systems and for associated internodal links in the Point-to-Point Microwave Radio Service. No new licenses will be issued under this Subpart but current licenses will be renewed.

(d) * * *

(24) This frequency is not available in the 150–170 MHz band until August 18, 1996. This frequency will be assigned with an authorized bandwidth not to exceed 11.25 kHz. In the 450–470 MHz band, secondary telemetry operations pursuant to § 90.238(e) will be authorized on this frequency.

* * * * *

(28) This frequency is not available until August 18, 1996. After August 18, 1996 this frequency will be assigned with an authorized bandwidth not to exceed 6 kHz.

(29) Assignment of frequencies in this band are subject to the provisions of § 90.173.

(30) This frequency is available for systems first licensed prior to August 18, 1995. No new systems will be authorized after August 18, 1995, but prior authorized systems may be modified, expanded, and renewed.

* * * * *

(f) * * *

(3) Frequencies in the 25–50 MHz, 150–170 MHz, 450–512 MHz and 902–928 MHz bands may be assigned for the operation of Location and Monitoring Service (LMS) systems in accordance with the provisions of subpart M of this part, notwithstanding this limitation.

* * * * *

10. Section 90.65 is amended by revising the table of frequencies in paragraph (b), revising limitation (41), and adding limitations (45), (46) and (47) in paragraph (c), and revising paragraph (e)(4) to read as follows:

§ 90.65 Petroleum Radio Service.

* * * * *

(b) * * *

PETROLEUM RADIO SERVICE FREQUENCY TABLE

Frequency or band	Class of station(s)	Limitations
Kilohertz:		
1614	Base or mobile	1, 2, 3, 4
1628	.....do	1, 2, 3, 4
1652	.....do	1, 2, 3, 4
1676	.....do	1, 2, 3, 4
1700	.....do	1, 2, 3, 4
2000 to 25,000	Fixed, base or mobile	1
2292	Base or mobile	1, 2, 4, 5
2398	.....do	1, 2, 4, 5
4637.5	.....do	1, 2, 4, 5
Megahertz:		
25.02	.....do	3, 4
25.04	.....do	6
25.06	.....do	3, 4
25.08	.....do	6, 7
25.10	.....do	3, 4, 7
25.12	.....do	
25.14	.....do	3, 4
25.16	.....do	
25.18	.....do	3, 4
25.20	.....do	
25.22	.....do	4, 5
25.24	.....do	
25.26	.....do	4, 5
25.28	.....do	
25.30	.....do	4, 5
25.32	.....do	
30.66	.....do	4, 5, 8
30.70	.....do	4, 5
30.74	.....do	4, 5, 8
30.78	.....do	4, 5
30.82	.....do	4, 5, 8
31.32	.....do	37
31.40	.....do	37
31.44	.....do	37

PETROLEUM RADIO SERVICE FREQUENCY TABLE—Continued

Frequency or band	Class of station(s)	Limitations
31.48	do	37
31.52	do	37
31.60	do	37
31.64	do	37
31.72	do	37
31.76	do	37
33.18	do	
33.20	do	
33.22	do	
33.24	do	
33.26	do	
33.28	do	
33.30	do	
33.32	do	
33.34	do	
33.36	do	
33.38	do	
35.48	do	37
36.25	do	9
41.71	do	9
48.56	do	10
48.58	do	10
48.60	do	10
48.62	do	10
48.64	do	10
48.66	do	10
48.68	do	10
48.70	do	10
48.72	do	10
48.74	do	10
48.76	do	10, 44
48.78	do	10
48.80	do	10
48.82	do	10
48.84	do	10, 44
48.86	do	10, 44
48.88	do	10
48.90	do	10
48.92	do	10, 44
48.94	do	10
48.96	do	10
48.98	do	10
49.00	do	10
49.02	do	10, 44
49.04	do	10
49.06	do	10
49.08	do	10, 44
49.10	do	10, 44
49.12	do	10
49.14	do	10
49.16	do	10, 44
49.18	do	10
49.20	do	10, 44
49.22	do	10
49.24	do	10, 44
49.26	do	10
49.28	do	10, 44
49.30	do	10
49.32	do	10
49.34	do	10
49.36	do	10, 44
49.38	do	10
49.40	do	10, 44
49.42	do	10
49.44	do	10
49.46	do	10,44
49.48	do	10
49.50	do	10,44
72.00 to 76.00	Operational fixed	11
74.61	Mobile	43
74.63	do	43
74.65	do	43

PETROLEUM RADIO SERVICE FREQUENCY TABLE—Continued

Frequency or band	Class of station(s)	Limitations
74.67	do	43
74.69	do	43
74.71	do	43
74.73	do	43
74.75	do	43
74.77	do	43
74.79	do	43
75.21	do	43
75.23	do	43
75.25	do	43
75.27	do	43
75.29	do	43
75.31	do	43
75.33	do	43
75.35	do	43
75.37	do	43
75.39	do	43
150 to 170	Base or mobile	45
150.980	do	6
150.9875	do	6, 41
153.035	do	12
153.0425	do	12, 41
153.050	do	4, 5, 13, 38, 40
153.0575	do	4, 5, 13, 38, 40, 41
153.0650	do	4, 5, 13, 38, 40
153.065	do	13
153.0725	do	13, 41
153.080	do	4, 5, 13
153.0875	do	4, 5, 13, 41
153.095	do	13
153.1025	do	13, 14
153.110	do	4, 5, 13
153.1175	do	4, 5, 13, 41
153.125	do	13, 38, 40
153.1325	do	13, 38, 40, 41
153.140	do	4, 5, 13
153.1475	do	4, 5, 13, 41
153.155	do	13
153.1625	do	13, 41
153.170	do	4, 5, 13
153.1775	do	4, 5, 13, 41
153.185	do	13
153.1925	do	13, 41
153.200	do	4, 5, 13
153.2075	do	4, 5, 13, 41
153.215	do	13
153.2225	do	13, 41
153.230	do	4, 5, 13
153.2375	do	4, 5, 13, 41
153.245	do	13
153.2525	do	13, 41
153.260	do	4, 5, 13
153.2675	do	4, 5, 13, 41
153.275	do	13
153.2825	do	13, 41
153.290	do	4, 5, 13
153.2975	do	4, 5, 13, 41
153.305	do	13
153.3125	do	13, 41
153.320	do	4, 5, 13
153.3275	do	4, 5, 13, 41
153.335	do	13, 38
153.3425	do	13, 38, 41
153.350	do	4, 5, 13, 38
153.3575	do	4, 5, 13, 38, 41
153.365	do	13, 38
153.3725	do	13, 38, 41
153.380	do	13, 38
153.3875	do	13, 38, 41
153.395	do	13, 38
153.4025	do	13, 38, 41
153.425	do	14

PETROLEUM RADIO SERVICE FREQUENCY TABLE—Continued

Frequency or band	Class of station(s)	Limitations
153.4325	.....do	14, 41
153.440	.....do	10, 15
153.4475	.....do	10, 15, 41
153.455	.....do	14
153.4625	.....do	14, 41
153.485	.....do	14
153.4925	.....do	14, 41
153.500	.....do	10, 15
153.5075	.....do	10, 15, 41
153.515	.....do	14
153.5225	.....do	14, 41
153.545	.....do	14
153.5525	.....do	14, 41
153.560	.....do	10, 15
153.5675	.....do	10, 15, 41
153.575	.....do	14
153.5825	.....do	14, 41
153.605	.....do	14
153.6125	.....do	14, 41
153.620	.....do	10, 15
153.6275	.....do	10, 15, 41
153.635	.....do	14
153.6425	.....do	14, 41
153.665	.....do	14
153.6725	.....do	14, 41
153.680	.....do	10, 15
153.6875	.....do	10, 15, 41
154.45625	Fixed or mobile	16, 18, 24, 34
154.46375	.....do	16, 18, 24, 35, 36
154.47125	.....do	16, 18, 24, 35
154.47875	.....do	16, 18, 24, 34
154.585	Mobile	6, 19
158.145	Base or mobile	20
158.1525	.....do	20, 41
158.160	.....do	10, 21
158.1675	.....do	10, 21, 41
158.175	.....do	20
158.1825	.....do	20, 41
158.205	.....do	20
158.2125	.....do	20, 41
158.220	.....do	10,21
158.2275	.....do	20, 21, 41
158.235	.....do	20
158.2425	.....do	20, 41
158.265	.....do	20
158.2725	.....do	20, 41
158.280	.....do	13
158.2875	.....do	13, 41
158.295	.....do	13
158.3025	.....do	13, 41
158.310	.....do	4, 5, 13
158.3175	.....do	4, 5, 13, 41
158.325	.....do	13, 38, 40
158.3325	.....do	13, 38, 40, 41
158.355	.....do	10, 39
158.3625	.....do	10, 39, 41
158.370	.....do	4, 5, 10
158.3775	.....do	4, 5, 10, 41
158.415	.....do	13, 38, 40
158.4225	.....do	13, 38, 40, 41
158.430	.....do	4, 5, 13
158.4375	.....do	4, 5, 13, 41
158.445	Mobile	6, 22
159.480	Based or mobile	6
159.4875	.....do	6, 41
169–172	Mobile, operational fixed	23
173.20375	Fixed or mobile	16, 18, 24, 35
173.2100	.....do	16, 24, 25, 35
173.2375	.....do	16, 18, 24, 34
173.250	Base or mobile	10, 21
173.2625	Fixed or mobile	16, 18, 24, 34
173.2875	.....do	16, 18, 24, 34

PETROLEUM RADIO SERVICE FREQUENCY TABLE—Continued

Frequency or band	Class of station(s)	Limitations
173.300	Base or mobile	10, 21
173.3125	Fixed or mobile	16, 18, 24, 34
173.3375	do	16, 18, 24, 34
173.350	Base or mobile	10, 21
173.3625	Fixed or mobile	16, 18, 24, 34
173.3900	do	16, 24, 25, 35
173.39625	do	16, 18, 24, 35
216–220	Base or mobile	26
220–222	Base or mobile	17
406–413	Operational fixed	23
450–470	Fixed, base, or mobile	27, 45
451.1625	Mobile	46
451.175	Base or mobile	28
451.18125	do	28, 47
451.18750	do	28, 41
451.19375	do	28, 47
451.2125	Mobile	46
451.225	Base or mobile	28
451.23125	do	28, 47
451.23750	do	28, 41
451.24375	do	28, 47
451.2625	Mobile	46
451.275	Base or mobile	28
451.28125	do	28, 47
451.28750	do	28, 41
451.29375	do	28, 47
451.3625	Mobile	46
451.375	Base or mobile	28
451.38125	do	28, 47
451.38750	do	28, 41
451.39375	do	28, 47
451.4125	Mobile	46
451.425	Base or mobile	28
451.43125	do	28, 47
451.43750	do	28, 41
451.44375	do	28, 47
451.4625	Mobile	46
451.475	Base or mobile	28
451.48125	do	28, 47
451.48750	do	28, 41
451.49375	do	28, 47
451.5125	Mobile	46
451.525	Base or mobile	28
451.53125	do	28, 47
451.53750	do	28, 41
451.54375	do	28, 47
451.550	do	4, 5, 10
451.55625	do	4, 5, 10, 47
451.56250	do	4, 5, 10, 41
451.56875	do	4, 5, 10, 47
451.575	do	28
451.58125	do	28, 47
451.58750	do	28, 41
451.59375	do	28, 47
451.600	do	4, 5, 10
451.60625	do	4, 5, 10, 47
451.61250	do	4, 5, 10, 41
451.61875	do	4, 5, 10, 47
451.625	do	28
451.63125	do	28, 47
451.63750	do	28, 41
451.64375	do	28, 47
451.650	do	4, 5, 10
451.65625	do	4, 5, 10, 47
451.66250	do	4, 5, 10, 41
451.66875	do	4, 5, 10, 47
451.675	do	28
451.68125	do	28, 47
451.68750	do	28, 41
451.69375	do	28, 47
451.700	do	4, 5, 10
451.70625	do	4, 5, 10, 47

PETROLEUM RADIO SERVICE FREQUENCY TABLE—Continued

Frequency or band	Class of station(s)	Limitations
451.71250	.....do	4, 5, 10, 41
451.71875	.....do	4, 5, 10, 47
451.7375	Mobile	46
451.750	Base or mobile	4, 5, 10
451.75625	.....do	4, 5, 10, 47
451.76250	.....do	4, 5, 10, 41
451.76875	.....do	4, 5, 10, 47
454.000	.....do	6
456.1625	Mobile	46
456.175	.....do	28
456.18125	.....do	28, 47
456.18750	.....do	28, 41
456.19375	.....do	28, 47
456.2125	.....do	46
456.225	.....do	28
456.23125	.....do	28, 47
456.23750	.....do	28, 41
456.24375	.....do	28, 47
456.2625	.....do	46
456.275	.....do	28
456.28125	.....do	28, 47
456.28750	.....do	28, 41
456.29375	.....do	28, 47
456.3625	.....do	46
456.375	.....do	28
456.38125	.....do	28, 47
456.38750	.....do	28, 41
456.39375	.....do	28, 47
456.4125	.....do	46
456.425	.....do	28
456.43125	.....do	28, 47
456.43750	.....do	28, 41
456.44375	.....do	28, 47
456.4625	.....do	46
456.475	.....do	28
456.48125	.....do	28, 47
456.48750	.....do	28, 41
456.49375	.....do	28, 47
456.5125	.....do	46
456.525	.....do	28
456.53125	.....do	28, 47
456.53750	.....do	28, 41
456.54375	.....do	28, 47
456.550	.....do	10
456.55625	.....do	10, 47
456.56250	.....do	10, 41
456.56875	.....do	10, 47
456.575	.....do	28
456.58125	.....do	28, 47
456.58750	.....do	28, 41
456.59375	.....do	28, 47
456.600	.....do	10
456.60625	.....do	10, 47
456.61250	.....do	10, 41
456.61875	.....do	10, 47
456.625	.....do	28
456.525	Base or mobile	28
456.63125	.....do	28, 47
456.63750	.....do	28, 41
456.64375	.....do	28, 47
456.650	.....do	10
456.65625	.....do	10, 47
456.66250	.....do	10, 41
456.66875	.....do	10, 47
456.675	.....do	28
456.68125	.....do	28, 47
456.68750	.....do	28, 41
456.69375	.....do	28, 47
456.700	.....do	10
456.70625	.....do	10, 47
456.71250	.....do	10, 41
456.71875	.....do	10, 47

PETROLEUM RADIO SERVICE FREQUENCY TABLE—Continued

Frequency or band	Class of station(s)	Limitations
456.750	.....do	10
456.75625	.....do	10, 47
456.76250	.....do	10, 41
456.76875	.....do	10, 47
459.000	Base or mobile	6
462.4625	Mobile	46
462.475	Base or mobile	28
462.48125	.....do	28, 47
462.48750	.....do	28, 41
462.49375	.....do	28, 47
462.5125	Mobile	46
462.53125	.....do	28, 47
467.4625	Mobile	46
467.475	.....do	28, 41
467.48125	.....do	28, 47
467.48750	.....do	28
467.49375	.....do	28, 47
467.5125	.....do	46
467.525	.....do	28, 41
467.53125	.....do	28, 47
470 to 512	Base or mobile	29
806–821	Mobile only	30
851–866	Base or mobile	30
896 to 901	Mobile	30
928 and above	Operational fixed	31
929–930	Base only	42
935 to 940	Base or mobile	30
1427 to 1435	Operational fixed, base or mobile	26
2450 to 2500	Base or mobile	32
8400 to 8500	.....do	33
10,550 to 10,680*	.....do	

* The frequencies in the band 10.55–10.68 GHz are available for Digital termination Systems and for associated internodal links in the Point-to-Point Microwave Radio Service. No new licenses will be issued under this Subpart but current licenses will be renewed.

(c) * * *

(41) This frequency is not available in the 150–170 MHz band until August 18, 1996. This frequency will be assigned with an authorized bandwidth not to exceed 11.25 kHz. In the 450–470 MHz band, secondary telemetry operations pursuant to § 90.238(e) will be authorized on this frequency.

* * * * *

(45) Assignment of frequencies in this band are subject to the provisions of § 90.173.

(46) This frequency is available for systems first licensed prior to August 18, 1995. No new systems will be authorized after August 18, 1995, but prior authorized systems may be modified, expanded, and renewed.

(47) This frequency is not available until August 18, 1996. After August 18, 1996 this frequency will be assigned with an authorized bandwidth not to exceed 6 kHz.

* * * * *

(e) * * *

(4) Frequencies in the 25–50 MHz, 150–170 MHz, 450–512 MHz and 902–928 MHz bands may be assigned for the operation of Location and Monitoring Service (LMS) systems in accordance with the provisions of subpart M of this part, notwithstanding this limitation.

11. Section 90.67 is amended by revising the table of frequencies in paragraph (b), revising limitation (36), and adding limitations (39), (40), (41), and (42) in paragraph (c), and revising paragraph (e)(3) to read as follows:

§ 90.67 Forest Products Radio Service.

* * * * *

(b) * * *

FOREST PRODUCTS RADIO SERVICE FREQUENCY TABLE

Frequency or band	Class of station(s)	Limitations
Kilohertz:		
1676	Base or mobile	1
1700	.....do	1
2398	.....do	1
Megahertz:		
29.71	.....do	
29.73	.....do	
29.75	.....do	
29.77	.....do	
29.79	.....do	
30.68	.....do	
30.72	.....do	
31.48	.....do	30
31.52	.....do	30

FOREST PRODUCTS RADIO SERVICE FREQUENCY TABLE—Continued

Frequency or band	Class of station(s)	Limitations
31.64	do	30
31.72	do	30
31.76	do	30
37.44	do	
37.88	do	
43.02	do	30
43.28	do	30
43.36	do	30
43.40	do	30
43.52	do	30
48.56	do	2
48.58	do	2
48.60	do	2
48.62	do	2
48.64	do	2
48.66	do	2
48.68	do	2
48.70	do	2
48.72	do	2
48.74	do	2
48.76	do	2, 38
48.78	do	2
48.80	do	2
48.82	do	2
48.84	do	2, 38
48.86	do	2, 38
48.88	do	2
48.90	do	2
48.92	do	2, 38
48.94	do	2
48.96	do	2
48.98	do	2
49.00	do	2
49.02	do	2, 38
49.04	do	2
49.06	do	2
49.08	do	2, 38
49.10	do	2, 38
49.12	do	2
49.14	do	2
49.16	do	2, 38
49.18	do	2
49.20	do	2, 38
49.22	do	2
49.24	do	2, 38
49.26	do	2
49.28	do	2, 38
49.30	do	2
49.32	do	2
49.34	do	2
49.36	do	2, 38
49.38	do	2
49.40	do	2, 38
49.42	do	2
49.44	do	2
49.46	do	2, 38
49.48	do	2
49.50	do	2, 38
49.54	do	3
49.58	do	3
72.00 to 76.00	Operational fixed	4
72.44	Mobile	34
72.48	do	34
72.52	do	34
72.56	do	34
72.60	do	34
75.44	do	34
75.48	do	34
75.52	do	34
75.56	do	34
75.60	do	34
150 to 170	Base or mobile	39

FOREST PRODUCTS RADIO SERVICE FREQUENCY TABLE—Continued

Frequency or band	Class of station(s)	Limitations
152.465	do	29
152.480	do	5, 40
153.050	do	6, 31, 33
153.0575	do	6, 31, 33, 36
153.065	do	6
153.0725	do	6, 36
153.080	do	6
153.0875	do	6, 36
153.095	do	6
153.1025	do	6, 36
153.110	do	6
153.1175	do	6, 36
153.125	do	6, 31, 33
153.1325	do	6, 31, 33, 36
153.140	do	6
153.1475	do	6, 36
153.155	do	6
153.1625	do	6, 36
153.170	do	6
153.1775	do	6, 36
153.185	do	6
153.1925	do	6, 36
153.200	do	6
153.2075	do	6, 36
153.215	do	6
153.2225	do	6, 36
153.230	do	6
153.2375	do	6, 36
153.245	do	6
153.2525	do	6, 36
153.260	do	6
153.2675	do	6, 36
153.275	do	6
153.2825	do	6, 36
153.290	do	6
153.2975	do	6, 36
153.305	do	6
153.3125	do	6, 36
153.320	do	6
153.3275	do	6, 36
153.335	do	6, 31
153.3425	do	6, 31, 36
153.350	do	6, 31
153.3575	do	6, 31, 36
153.365	do	6, 31
153.3725	do	6, 31, 36
153.380	do	6, 31
153.3875	do	6, 31, 36
153.395	do	6, 31
153.4025	do	6, 31, 36
153.425	do	7
153.4325	do	7, 36
153.440	do	2, 8
153.4475	do	2, 8, 36
153.455	do	7
153.4625	do	7, 36
153.485	do	7
153.4925	do	7, 36
153.500	do	2, 8
153.5075	do	2, 8, 36
153.515	do	7
153.5225	do	7, 36
153.545	do	7
153.5525	do	7, 36
153.560	do	2, 8
153.5675	do	2, 8, 36
153.575	do	7
153.5825	do	7, 36
153.605	do	7
153.6125	do	7, 36
153.620	do	2, 8
153.6275	do	2, 8, 36

FOREST PRODUCTS RADIO SERVICE FREQUENCY TABLE—Continued

Frequency or band	Class of station(s)	Limitations
153.635	.....do	7
153.6425	.....do	7, 36
153.665	.....do	7
153.6725	.....do	7, 36
153.680	.....do	2, 8
153.6875	.....do	2, 8, 36
154.45625	Fixed or mobile	13, 14, 25, 27
154.46375	.....do	13, 14, 24, 25, 26
154.47125	.....do	13, 14, 24, 25
154.47875	.....do	13, 14, 25, 27
154.570	Mobile	9
154.600	.....do	9
154.625	Base or mobile	5, 40
154.640	.....do	5, 36
157.725	.....do	29
157.740	.....do	5, 40
158.145	.....do	10
158.1525	.....do	10, 36
158.160	.....do	2, 11
158.1675	.....do	2, 11, 36
158.175	.....do	10
158.1825	.....do	10, 36
158.205	.....do	10
158.2125	.....do	10, 36
158.220	.....do	2, 11
158.2275	.....do	2, 11, 36
158.235	.....do	10
158.2425	.....do	10, 36
158.265	.....do	10
158.2725	.....do	10, 36
158.280	.....do	6
158.2875	.....do	6, 36
158.295	.....do	6
158.3025	.....do	6, 36
158.310	.....do	6
158.3175	.....do	6, 36
158.325	.....do	6, 31, 33
158.3325	.....do	6, 31, 33, 36
158.355	.....do	2, 32
158.3625	.....do	2, 32, 36
158.370	.....do	2
158.3775	.....do	2, 36
158.415	.....do	6, 31, 33
158.4225	.....do	6, 31, 33, 36
158.430	.....do	6
158.4375	.....do	6, 36
158.460	.....do	5, 40
169–172	Mobile, operational fixed	12
173.20375	Fixed or mobile	13, 14, 24, 25
173.2100	.....do	13, 15, 24, 25
173.2375	.....do	13, 14, 25, 27
173.250	Base or mobile	2, 11
173.2625	Fixed or mobile	13, 14, 25, 27
173.2875	.....do	13, 14, 25, 27
173.300	Base or mobile	2, 11
173.3125	Fixed or mobile	13, 14, 25, 27
173.3375	.....do	13, 14, 25, 27
173.350	Base or mobile	2, 11
173.3625	Fixed or mobile	13, 14, 25, 27
173.3900	.....do	13, 15, 24, 25
173.39625	.....do	13, 14, 24, 25
216–220	Base or mobile	16
220–222	Base and mobile	37
406–413	Operational fixed	12
450–470	Fixed, base, or mobile	17, 39
451.1625	Mobile	41
451.175	Base or mobile	18
451.18125	.....do	18, 42
.		
451.18750	.....do	18, 36
451.19375	.....do	18, 42
451.2125	Mobile	41

FOREST PRODUCTS RADIO SERVICE FREQUENCY TABLE—Continued

Frequency or band	Class of station(s)	Limitations
451.225	Base or mobile	18
451.23125	.....do	18, 42
451.23750	.....do	18, 36
451.24375	.....do	18, 42
451.2625	Mobile	41
451.275	Base or mobile	18
451.28125	.....do	18, 42
451.28750	.....do	18, 36
451.29375	.....do	18, 42
451.3625	Mobile	41
451.375	Base or mobile	18
451.38125	.....do	18, 42
451.38750	.....do	18, 36
451.39375	.....do	18, 42
451.4125	Mobile	41
451.425	Base or mobile	18
451.43125	.....do	18, 42
451.43750	.....do	18, 36
451.44375	.....do	18, 42
451.4625	Mobile	41
451.475	Base or mobile	18
451.48125	.....do	18, 42
451.48750	.....do	18, 36
451.49375	.....do	18, 42
451.5125	Mobile	41
451.525	Base or mobile	18
451.53125	.....do	18, 42
451.53750	.....do	18, 36
451.54375	.....do	18, 42
451.550	.....do	2
451.55625	.....do	2, 42
451.56250	.....do	2, 36
451.56875	.....do	2, 42
451.575	.....do	18
451.58125	.....do	18, 42
451.58750	.....do	18, 36
451.59375	.....do	18, 42
451.600	.....do	2
451.60625	.....do	2, 42
451.61250	.....do	2, 36
451.61875	.....do	2, 42
451.625	.....do	18
451.63125	.....do	18, 42
451.63750	.....do	18, 36
451.64375	.....do	18, 42
451.650	.....do	2
451.65625	.....do	2, 42
451.66250	.....do	2, 36
451.66875	.....do	2, 42
451.675	.....do	18
451.68125	.....do	18, 42
451.68750	.....do	18, 36
451.69375	.....do	18, 42
451.700	.....do	2
451.70625	.....do	2, 42
451.71250	.....do	2, 36
451.71875	.....do	2, 42
451.7375	Mobile	41
451.750	Base or mobile	2
451.75625	.....do	2, 42
451.76250	.....do	2, 36
451.76875	.....do	2, 42
452.100	.....do	28
452.10625	.....do	28, 42
452.11250	.....do	28, 36
452.11875	.....do	28, 42
452.200	.....do	28
452.20625	.....do	28, 42
452.21250	.....do	28, 36
452.21875	.....do	28, 42
452.225	.....do	28
452.23125	.....do	28, 42

FOREST PRODUCTS RADIO SERVICE FREQUENCY TABLE—Continued

Frequency or band	Class of station(s)	Limitations
452.23750	do	28, 36
452.24375	do	28, 42
452.250	do	28
452.25625	do	28, 42
452.26250	do	28, 36
452.26875	do	28, 42
452.275	do	28
452.28125	do	28, 42
452.28750	do	28, 36
452.29375	do	28, 42
452.350	do	28
452.35625	do	28, 42
452.36250	do	28, 36
452.36875	do	28, 42
452.400	do	28
452.40625	do	28, 42
452.41250	do	28, 36
452.41875	do	28, 42
452.450	do	28
452.45625	do	28, 42
452.46250	do	28, 36
452.46875	do	28, 42
456.1625	Mobile	41
456.175	do	18
456.18125	do	18, 42
456.18750	do	18, 36
456.19375	do	18, 42
456.2125	do	41
456.225	do	18
456.23125	do	18, 42
456.23750	do	18, 36
456.24375	do	18, 42
456.2625	do	41
456.275	do	18
456.28125	do	18, 42
456.28750	do	18, 36
456.29375	do	18, 42
456.3625	do	41
456.375	do	18
456.38125	do	18, 42
456.38750	do	18, 36
456.39375	do	18, 42
456.4125	do	41
456.425	do	18
456.43125	do	18, 42
456.43750	do	18, 36
456.44375	do	18, 42
456.4625	do	41
456.475	do	18
456.48125	do	18, 42
456.48750	do	18, 36
456.49375	do	18, 42
456.5125	do	41
456.525	do	18
456.53125	do	18, 42
456.53750	do	18, 36
456.54375	do	18, 42
456.550	do	2
456.55625	do	2, 42
456.56250	do	2, 36
456.56875	do	2, 42
456.575	do	18
456.58125	do	18, 42
456.58750	do	18, 36
456.59375	do	18, 42
456.600	do	2
456.60625	do	2, 42
456.61250	do	2, 36
456.61875	do	2, 42
456.625	do	18
456.63125	do	18, 42
456.63750	do	18, 36

FOREST PRODUCTS RADIO SERVICE FREQUENCY TABLE—Continued

Frequency or band	Class of station(s)	Limitations
456.64375	do	18, 42
456.650	do	2
456.65625	do	2, 42
456.66250	do	2, 36
456.66875	do	2, 42
456.675	do	18
456.68125	do	18, 42
456.68750	do	18, 36
456.69375	do	18, 42
456.700	do	2
456.70625	do	2, 42
456.71250	do	2, 36
456.71875	do	2, 42
456.7375	do	41
456.750	do	2
456.75625	do	2, 42
456.76250	do	2, 36
456.76875	do	2, 42
457.100	do	28
457.10625	do	28, 42
457.11250	do	28, 36
457.11875	do	28, 42
457.200	do	28
457.20625	do	28, 42
457.21250	do	28, 36
457.21875	do	28, 42
457.225	do	28
457.23125	do	28, 42
457.23750	do	28, 36
457.24375	do	28, 42
457.250	do	28
457.25625	do	28, 42
457.26250	do	28, 36
457.26875	do	28, 42
457.275	do	28
457.28125	do	28, 42
457.28750	do	28, 36
457.29375	do	28, 42
457.350	do	28
457.35625	do	28, 42
457.36250	do	28, 36
457.36875	do	28, 42
457.400	do	28
457.40625	do	28, 42
457.41250	do	28, 36
457.41875	do	28, 42
457.450	do	28
457.45625	do	28, 42
457.46250	do	28, 36
457.46875	do	28, 42
462.4625	do	41
462.475	Base or mobile	18
462.48125	do	18, 42
462.48750	do	18, 36
462.49375	do	18, 42
462.5125	do	41
462.525	Base or mobile	18
462.53125	do	18, 42
467.4625	Mobile	41
467.475	do	18
467.48125	do	18, 42
467.48750	do	18, 36
467.49375	do	18, 42
467.5125	do	41
467.525	do	18
467.53125	do	18, 42
470–512	Base or mobile	19
806–821	Mobile only	20
851–866	Base or mobile	20
896–901	Mobile	20
928 and above	Operational fixed	21
929–930	Base only	35

FOREST PRODUCTS RADIO SERVICE FREQUENCY TABLE—Continued

Frequency or band	Class of station(s)	Limitations
935–940	Base or mobile	20
1427–1435	Operational fixed, base or mobile	16
2450–2500	Base or mobile	22
8400–8500	.....do	23
10,550–10,680*	.....do	

*The frequencies in the band 10.55–10.68 GHz are available for Digital Termination Systems and for associated internodal links in the Point-to-Point Microwave Radio Service. No new licenses will be issued under this Subpart but current licenses will be renewed.

(c) * * *

(36) This frequency is not available in the 150–170 MHz band until August 18, 1996. This frequency will be assigned with an authorized bandwidth not to exceed 11.25 kHz. In the 450–470 MHz band, secondary telemetry operations pursuant to § 90.238(e) will be authorized on this frequency.

* * * * *

(39) Assignment of frequencies in this band are subject to the provisions of § 90.173.

(40) This frequency will be authorized a channel bandwidth of 25 kHz.

(41) This frequency is available for systems first licensed prior to August 18, 1995. No new systems will be authorized after August 18, 1995, but prior authorized systems may be modified, expanded, and renewed.

(42) This frequency is not available until August 18, 1996. After August 18, 1996 this frequency will be assigned with an authorized bandwidth not to exceed 6 kHz.

* * * * *

(e) * * *

(3) Frequencies in the 25–50 MHz, 150–170 MHz, 450–512 MHz and 902–928 MHz bands may be assigned for the operation of Location and Monitoring Service (LMS) systems in accordance with the provisions of subpart M of this part, notwithstanding this limitation.

12. Section 90.69 is amended by revising the table of frequencies in paragraph (b), revising limitation (12), and adding limitations (14) and (15) in paragraph (c), and revising paragraph (e)(3) to read as follows:

§ 90.69 Film and Video Production Radio Service.

* * * * *

(b) * * *

FILM AND VIDEO PRODUCTION RADIO SERVICE FREQUENCY TABLE

Frequency or band	Class of station(s)	Limitations
Kilohertz:		
1628	Base or mobile	1
1652	.....do	1
2292	.....do	1
2398	.....do	1
4637.5	.....do	1
Megahertz:		
72 to 76	Operational fixed	2
150 to 170	Base or mobile	15
152.8625	.....do	3, 14
152.87	.....do	3
152.8775	.....do	3, 12
152.90	.....do	3
152.9075	.....do	3, 12
152.93	.....do	3
152.9375	.....do	3, 12
152.96	.....do	3
152.9675	.....do	3, 12
152.99	.....do	3
152.9975	.....do	3, 12
153.02	.....do	3
153.0275	.....do	3, 12
169–172	Mobile	11
173.225	Base or mobile	4
173.275	.....do	4
173.325	.....do	4
173.375	.....do	4
220–222	Base and mobile	13
806 to 821	Mobile	5
851 to 866	Base or mobile	5
896 to 901	Mobile	5
928 and above	Operational fixed	6
929–930	Base only	10
935 to 940	Base or mobile	5
1427 to 1435	Base, mobile or operational fixed	7
2450 to 2500	Base or mobile	8
8400 to 8500	.....do	9

FILM AND VIDEO PRODUCTION RADIO SERVICE FREQUENCY TABLE—Continued

Frequency or band	Class of station(s)	Limitations
10,550 to 10,680*	.....do	

*The frequencies in the band 10.55–10.68 GHz are available for Digital Termination Systems and for associated internodal links in the Point-to-Point Microwave Radio Service. No new licenses will be issued under this subpart but current licenses will be renewed.

(c) * * *

(12) This frequency is not available in the 150–170 MHz band until August 18, 1996. This frequency will be assigned with an authorized bandwidth not to exceed 11.25 kHz. In the 450–470 MHz band, secondary telemetry operations pursuant to § 90.238(e) will be authorized on this frequency.

* * * * *

(14) This frequency is not available until August 18, 1996. After August 18, 1996 this frequency will be assigned with an authorized bandwidth not to exceed 6 kHz.

(15) Assignment of frequencies in this band are subject to the provisions of § 90.173

* * * * *

(e) * * *

(3) Frequencies in the 25–50 MHz, 150–170 MHz, 450–512 MHz and 902–928 MHz bands may be assigned for the operation of Location and Monitoring Service (LMS) systems in accordance with the provisions of subpart M of this part, notwithstanding this limitation.

13. Section 90.71 is amended by revising the table of frequencies in paragraph (b) and adding limitations (12), (13), (14), and (15) in paragraph (c), and revising paragraph (e)(3) to read as follows:

§ 90.71 Relay Press Radio Service.

* * * * *

(b) * * *

RELAY PRESS RADIO SERVICE FREQUENCY TABLE

Frequency or band	Class of station(s)	Limitations
Megahertz:		
72.0 to 76.0	Operational fixed	1
169–172	Mobile	8
173.225	Base or mobile	2
173.275	.....do	2
173.325	.....do	2
173.375	.....do	2
220–222	Base and mobile	10
450–470	Fixed or mobile	11, 14
452.9625	Mobile	15
452.975	Fixed or mobile	
452.98125	.....do	13
452.98750	.....do	12
452.99375	.....do	13
453.000	.....do	
453.00625	.....do	13
453.01250	.....do	12
453.01875	.....do	13
457.9625	Mobile	15
457.975	.....do	
457.98125	.....do	13
457.98750	.....do	12
457.99375	.....do	13
458.000	.....do	
458.00625	.....do	13
458.01250	.....do	12
458.01875	.....do	13
806 to 821	.....do	3
851 to 866	Base or mobile	3
896 to 901	Mobile	3
929–930	Base only	9
928 and above	Operational fixed	4
935 to 940	Base or mobile	3
1427 to 1435	Operational fixed, base or mobile	5
2450 to 2500	Base or mobile	6
8400 to 8500	.....do	7
10,550 to 10,680*	.....do	

*The frequencies in the band 10.55–10.68 GHz are available for Digital Termination Systems and for associated internodal links in the Point-to-Point Microwave Radio Service. No new licenses will be issued under this Subpart but current licenses will be renewed.

(c) * * *

(12) This frequency is not available in the 150–170 MHz band until August 18, 1996. This frequency will be assigned with an authorized bandwidth not to exceed 11.25 kHz. In the 450–470 MHz band, secondary telemetry operations pursuant to § 90.238(e) will be authorized on this frequency.

(13) This frequency is not available until August 18, 1996. After August 18,

1996 this frequency will be assigned with an authorized bandwidth not to exceed 6 kHz.

(14) Assignment of frequencies in this band are subject to the provisions of § 90.173

(15) This frequency is available for systems first licensed prior to August 18, 1995. No new systems will be authorized after August 18, 1995, but prior authorized systems may be modified, expanded, and renewed.

* * * * *

(e) * * *

(3) Frequencies in the 25–50 MHz, 150–170 MHz, 450–512 MHz and 902–928 MHz bands may be assigned for the operation of Location and Monitoring Service (LMS) systems in accordance with the provisions of subpart M of this part, notwithstanding this limitation.

14. Section 90.73 is amended by revising the table of frequencies in paragraph (c), revising limitation (35) and adding limitations (38), (39), (40), and (41) in paragraph (d), revising the table in paragraph (e)(4), and revising paragraph (f)(4) to read as follows:

§ 90.73 Special Industrial Radio Service.

* * * * *

(c) * * *

SPECIAL INDUSTRIAL RADIO SERVICE FREQUENCY TABLE

Frequency or band	Class of station(s)	Limitations
Kilohertz:		
2,000 to 25,000	Fixed, base or mobile	1
2292	Base or mobile	1, 34
2398	do	1, 34
4637.5	do	1, 34
Megahertz:		
30.58	do	2
30.60	do	2
30.62	do	2
30.64	do	34
31.28	do	34
31.32	do	29, 34
31.36	do	34
31.40	do	29, 34
31.44	do	29, 34
31.48	do	29, 31, 34
31.52	do	29, 31, 34
31.56	do	34
31.60	do	29, 34
31.64	do	29, 31, 34
31.68	do	34
31.72	do	29, 31, 34
31.76	do	29, 31, 34
31.80	do	34
31.84	do	34
31.88	do	34
31.92	do	34
31.96	do	34
33.12	do	3, 34
35.28	Base or mobile	34
35.32	do	34
35.36	do	34
35.40	do	34
35.44	do	34
35.48	do	29, 34
35.52	do	34
35.74	do	2
35.76	do	2
35.78	do	2
35.80	do	2
35.82	do	2
35.84	do	2
35.86	do	2
43.02	do	31, 34
43.04	do	4
43.06	do	34
43.08	do	34
43.10	do	34
43.12	do	34
43.14	do	34
43.18	do	2
43.28	do	31, 34
43.32	do	34
43.36	do	31, 34
43.40	do	31, 34
43.44	do	34
43.48	do	34
43.52	do	31, 34
47.44	do	2

SPECIAL INDUSTRIAL RADIO SERVICE FREQUENCY TABLE—Continued

Frequency or band	Class of station(s)	Limitations
47.48	do	2
47.52	do	2
47.56	do	32
47.60	do	2
47.64	do	2
47.68	do	2
49.52	do	34
49.54	do	5, 34
49.56	do	2
49.58	do	5, 34
72–76	Operational fixed	6
72.44	Mobile	7
72.48	do	7
72.52	do	7
72.56	do	7
72.60	do	7
75.44	do	7
75.48	do	7
75.52	do	7
75.56	do	7
75.60	do	7
150 to 170	Base or mobile	39
151.490	do	2, 8
151.4975	do	2, 8, 35
151.505	do	4
151.5125	do	4, 35
151.520	do	2
151.5275	do	2, 35
151.535	do	2
151.5425	do	2, 35
151.550	do	2
151.5575	do	2, 35
151.565	do	2
151.5725	do	2, 35
151.580	do	2
151.5875	do	2, 35
151.595	do	2
151.6025	do	2, 35
152.465	do	2, 28, 35
152.480	do	2, 9, 35, 40
152.8625	do	10, 34, 38
152.870	do	10, 34
152.8775	do	10, 34, 35
152.885	do	2
152.8925	do	2, 35
152.900	do	2, 10
152.9075	do	2, 10, 35
152.915	do	2
152.9225	do	2, 35
152.930	do	2, 10
152.9375	do	2, 10, 35
152.945	do	2
152.9525	do	2, 35
152.960	do	2, 10
152.9675	do	2, 10, 35
152.975	do	2
152.9825	do	2, 35
152.990	do	2, 10
152.9975	do	2, 10, 35
153.005	do	2
153.0125	do	2, 35
153.020	do	2, 10
153.0275	do	2, 10, 35
153.035	do	2, 11
153.0425	do	2, 11, 35
153.050	do	2, 30, 33
153.0575	do	2, 30, 33, 35
153.125	do	2, 30, 33
153.1325	do	2, 30, 33, 35
153.335	do	2, 30
153.3425	do	2, 30, 35
153.350	do	2, 30

SPECIAL INDUSTRIAL RADIO SERVICE FREQUENCY TABLE—Continued

Frequency or band	Class of station(s)	Limitations
153.3575	.....do	2, 30, 35
153.365	.....do	2, 30
153.3725	.....do	2, 30, 35
153.380	.....do	2, 30
153.3875	.....do	2, 30, 35
153.395	.....do	2, 30
153.4025	.....do	2, 30, 35
154.45625	Fixed or mobile	12, 13, 15, 25
154.46375	.....do	12, 13, 15, 26, 27
154.47125	.....do	12, 13, 15, 27
154.47875	.....do	12, 13, 15, 25
154.4825	Base or mobile	2, 35
154.490	.....do	2
154.4975	.....do	2, 35
154.505	.....do	2, 35
154.625	.....do	2, 9, 40
154.640	.....do	2, 9, 35
157.725	.....do	2, 28
157.740	.....do	2, 9, 40
158.325	.....do	2, 30, 33
158.3325	.....do	2, 30, 33, 35
158.355	.....do	2, 32
158.3625	.....do	2, 32, 35
158.385	.....do	2
158.3925	.....do	2, 35
158.400	.....do	4
158.4075	.....do	4, 35
158.415	.....do	2, 30, 33
158.4225	.....do	2, 30, 33, 35
158.460	.....do	2, 9, 40
169 to 172	Mobile, operational fixed	14
173.20375	Fixed or mobile	12, 13, 15, 27
173.2100	.....do	12, 15, 16, 27
173.2375	.....do	12, 13, 15, 25
173.2625	.....do	12, 13, 15, 25
173.2875	.....do	12, 13, 15, 25
173.3125	.....do	12, 13, 15, 25
173.3375	.....do	12, 13, 15, 25
173.3625	.....do	12, 13, 15, 25
173.3900	.....do	12, 15, 16, 27
173.39625	.....do	12, 13, 15, 27
216 to 220	Base or mobile	17
220–222	Base and mobile	37
406–413	Operational fixed	14
450 to 470	Fixed, base, or mobile	18, 39
451.7125	Mobile	41
451.725	Base or mobile	2
451.73125	.....do	2, 38
451.73750	.....do	2, 35
451.74375	.....do	2, 38
451.7625	Mobile	41
451.775	Base or mobile	2
451.78125	.....do	2, 38
451.78750	.....do	2, 35
451.79375	.....do	2, 38
451.800	Operational fixed, base or mobile	4, 19
451.80625	.....do	4, 19, 38
451.81250	.....do	4, 19, 35
451.81875	.....do	4, 19, 38
451.825	Base or mobile	2
451.83125	.....do	2, 38
451.83750	.....do	2, 35
451.84375	.....do	2, 38
451.850	.....do	2
451.85625	.....do	2, 38
451.86250	.....do	2, 35
451.86875	.....do	2, 38
451.875	.....do	2
451.88125	.....do	2, 38
451.88750	.....do	2, 35
451.89375	.....do	2, 38
451.900	.....do	2

SPECIAL INDUSTRIAL RADIO SERVICE FREQUENCY TABLE—Continued

Frequency or band	Class of station(s)	Limitations
451.90625	.....do	2, 38
451.91250	.....do	2, 35
451.91875	.....do	2, 38
451.925	.....do	2
451.93125	.....do	2, 38
451.93750	.....do	2, 35
451.94375	.....do	2, 38
451.950	.....do	2
451.95625	.....do	2, 38
451.96250	.....do	2, 35
451.96875	.....do	2, 38
451.975	.....do	2
451.98125	.....do	2, 38
451.98750	.....do	2, 35
451.99375	.....do	2, 38
452.000	.....do	2
452.00625	.....do	2, 38
452.01250	.....do	2, 35
452.01875	.....do	2, 38
452.025	.....do	2
452.03125	.....do	2, 38
452.03750	.....do	2, 35
452.04375	.....do	2, 38
452.0625	Mobile	41
452.075	Base or mobile	2
452.08125	.....do	2, 38
452.08750	.....do	2, 35
452.09375	.....do	2, 38
452.1125	Mobile	41
452.125	Base or mobile	2
452.13125	.....do	2, 38
452.13750	.....do	2, 35
452.14375	.....do	2, 38
452.1625	Mobile	41
452.175	Base or mobile	2
452.18125	.....do	2, 38
452.18750	.....do	2, 35
452.19375	.....do	2, 38
456.7125	Mobile	41
456.725	.....do	2
456.73125	.....do	2, 38
456.73750	.....do	2, 35
456.74375	.....do	2, 38
456.7625	.....do	41
456.775	.....do	2
456.78125	.....do	2, 38
456.78750	.....do	2, 35
456.79375	.....do	2, 38
456.800	Operational fixed, base or mobile	4, 19
456.80625	.....do	4, 19, 38
456.81250	.....do	4, 19, 35
456.81875	.....do	4, 19, 38
456.825	Mobile	2
456.83125	.....do	2, 38
456.83750	.....do	2, 35
456.84375	.....do	2, 38
456.850	.....do	2
456.85625	.....do	2, 38
456.86250	.....do	2, 35
456.86875	.....do	2, 38
456.875	.....do	2
456.88125	.....do	2, 38
456.88750	.....do	2, 35
456.89375	.....do	2, 38
456.900	.....do	2
456.90625	.....do	2, 38
456.91250	.....do	2, 35
456.91875	.....do	2, 38
456.925	.....do	2
456.93125	.....do	2, 38
456.93750	.....do	2, 35
456.94375	.....do	2, 38

SPECIAL INDUSTRIAL RADIO SERVICE FREQUENCY TABLE—Continued

Frequency or band	Class of station(s)	Limitations
456.950	do	2
456.95625	do	2, 38
456.96250	do	2, 35
456.96875	do	2, 38
456.975	do	2
456.98125	do	2, 38
456.98750	do	2, 35
456.99375	do	2, 38
457.000	do	2
457.00625	do	2, 38
457.01250	do	2, 35
457.01875	do	2, 38
457.025	do	2
457.03125	do	2, 38
457.03750	do	2, 35
457.04375	do	2, 38
457.0625	do	41
457.075	do	2
457.08125	do	2, 38
457.08750	do	2, 35
457.09375	do	2, 38
457.1125	do	41
457.125	do	2
457.13125	do	2, 38
457.13750	do	2, 35
457.14375	do	2, 38
457.1625	do	41
457.175	do	2
457.18125	do	2, 38
457.18750	do	2, 35
457.19375	do	2, 38
470 to 512	Base or mobile	20
806 to 821	Mobile	21
851 to 866	Base or mobile	21
896 to 901	Mobile	21
928 and above	Operational fixed	22
929–930	Base only	36
935 to 940	Base or mobile	21
1427 to 1435	Operational fixed, base or mobile	17
2450 to 2500	Base or mobile	23
8400 to 8500	do	24
10,550 to 10,680*	do	

*The frequencies in the band 10.55–10.68 GHz are available for Digital Termination Systems and for associated internodal links in the Point-to-Point Microwave Radio Service. No new licenses will be issued under this Subpart but current licenses will be renewed.

(d) * * *

(35) This frequency is not available in the 150–170 MHz band until August 18, 1996. This frequency will be assigned with an authorized bandwidth not to exceed 11.25 kHz. In the 450–470 MHz band, secondary telemetry operations pursuant to § 90.238(e) will be authorized on this frequency.

* * * * *

(38) This frequency is not available until August 18, 1996. After August 18, 1996 this frequency will be assigned with an authorized bandwidth not to exceed 6 kHz.

(39) Assignment of frequencies in this band are subject to the provisions of § 90.173.

(40) This frequency will be authorized a channel bandwidth of 25 kHz.

(41) This frequency is available for systems first licensed prior to August 18, 1995. No new systems will be authorized after August 18, 1995, but prior authorized systems may be modified, expanded, and renewed.

(e) * * *

(4) * * *

Base and mobile	Mobile only
159.240	160.410
159.2475	160.4175
159.255	160.425
159.2625	160.4325
159.270	160.440
159.2775	160.4475
159.285	160.455
159.2925	160.4625
159.300	160.470
159.3075	160.4775
159.315	160.485
159.3225	160.4925
159.330	160.500
159.3375	160.5075
159.345	160.515
159.3525	160.5225
159.360	160.530
159.3675	160.5375
159.375	160.545
159.3825	160.5525
159.390	160.560
159.3975	160.5675
159.405	160.575
159.4125	160.5825
159.420	160.590
159.4275	160.5975
159.435	160.605
159.4425	160.6125

* * * * *

(f) * * *

(4) Frequencies in the 25–50 MHz, 150–170 MHz, 450–512 MHz and 902–928 MHz bands may be assigned for the operation of Location and Monitoring Service (LMS) systems in accordance

with the provisions of subpart M of this part, notwithstanding this limitation.

* * * * *

15. Section 90.75 is amended by revising the table of frequencies in paragraph (b), revising the table in limitation (23), revising limitation (24), removing and reserving limitation (38), adding limitations (46), (47), (48), (49), (50), and (51) in paragraph (c), and revising paragraphs (d)(4) and (e)(4) to read as follows:

§ 90.75 Business Radio Service.

* * * * *

(b) * * *

BUSINESS RADIO SERVICE FREQUENCY TABLE

Frequency or band	Class of station(s)	Limitations
Megahertz:		
27.43	Base or Mobile	1, 2
27.45	.....do	1, 2
27.47	.....do	1, 2
27.49	.....do	1, 3
27.51	Mobile	4
27.53	.....do	4
30.76	Base or Mobile	1, 2
30.80	.....do	1, 2
30.84	Mobile	4, 22
30.88	Base or Mobile	1, 2
30.92	.....do	1, 2
30.96	.....do	1, 2
31.00	.....do	1, 2
31.04	.....do	1, 2
31.16	.....do	1, 2
31.20	.....do	1, 2
31.24	.....do	1, 2
33.14	Mobile	4, 22
33.16	Base or Mobile	1, 2
33.40	Mobile	6, 22
35.02	.....do	4, 5, 22
35.04	Base or Mobile	1, 3
35.06	.....do	1, 2
35.08	.....do	1, 2
35.10	.....do	1, 2
35.12	.....do	1, 2
35.14	.....do	1, 2
35.18	.....do	1, 2
35.70	.....do	2
35.72	.....do	2
35.88	.....do	1, 2
35.90	.....do	1, 2
35.92	.....do	1, 2
35.94	.....do	
35.96	.....do	
35.98	.....do	
42.96	.....do	1, 2
42.98	Mobile	4, 22
43.00	Base or Mobile	1, 2
72 to 76	Operational fixed	7
74.61	Mobile	45
74.63	.....do	45
74.65	.....do	45
74.67	.....do	45
74.69	.....do	45
74.71	.....do	45
74.73	.....do	45
74.75	.....do	45
74.77	.....do	45
74.79	.....do	45
75.21	.....do	45
75.23	.....do	45
75.25	.....do	45
75.27	.....do	45
75.29	.....do	45
75.31	.....do	45
75.33	.....do	45
75.35	.....do	45
75.37	.....do	45
75.39	.....do	45
150 to 170	Base or Mobile	48
150.815	Mobile	8
150.830	Base	8, 10, 12, 49
150.845	Base or Mobile	8

BUSINESS RADIO SERVICE FREQUENCY TABLE—Continued

Frequency or band	Class of station(s)	Limitations
150.8525	do	8, 24
150.860	do	8
150.8675	do	8, 24
150.875	do	8
150.8825	do	8, 24
150.890	do	8
150.8975	do	8, 24
150.905	do	8
150.920	Base	8, 10, 12, 49
150.935	Base or Mobile	8
150.9425	do	8, 24
150.950	do	8
150.9575	do	8, 24
150.965	do	8
150.9725	do	8, 24
150.995	do	8
151.0025	do	8, 24
151.010	do	8
151.0175	do	8, 24
151.025	do	8
151.0325	do	8, 24
151.040	do	8
151.0475	do	8, 24
151.055	do	8
151.070	Base	8, 10, 12, 49
151.085	Base or Mobile	8
151.0925	do	8, 24
151.100	do	8
151.1075	do	8, 24
151.115	do	8
151.1225	do	8, 24
151.130	do	8
151.1375	do	8, 24
151.145	do	8
151.1525	do	8, 24
151.160	do	8
151.1675	do	8, 24
151.175	do	8
151.190	Base	8, 10, 12, 49
151.205	Base or Mobile	8
151.2125	do	8, 24
151.220	do	8
151.2275	do	8, 24
151.235	do	8
151.2425	do	8, 24
151.250	do	8
151.2575	do	8, 24
151.265	do	8
151.2725	do	8, 24
151.280	do	8
151.2875	do	8, 24
151.295	do	8
151.310	Base	8, 10, 12, 49
151.325	Base or Mobile	8
151.3325	do	8, 24
151.340	do	8
151.3475	do	8, 24
151.355	do	8
151.3625	do	8, 24
151.370	do	8
151.3775	do	8, 24
151.385	do	8
151.3925	do	8, 24
151.400	do	8
151.4075	do	8, 24
151.415	do	8
151.4225	do	8, 24
151.430	do	8
151.4375	do	8, 24
151.445	do	8
151.4525	do	8, 24
151.460	do	8

BUSINESS RADIO SERVICE FREQUENCY TABLE—Continued

Frequency or band	Class of station(s)	Limitations
151.4675	.....do	8, 24
151.475	.....do	8
151.4825	.....do	8, 24
151.625	.....do	1, 3
151.640	.....do	1, 2, 46
151.6475	.....do	1, 2, 24
151.655	.....do	1, 2
151.6625	.....do	1, 2, 24
151.670	.....do	1, 2, 24
151.6775	.....do	1, 2, 24
151.685	.....do	1, 2
151.700	.....do	3, 30, 47
151.715	.....do	1, 2
151.7225	.....do	1, 2, 24
151.730	.....do	1, 2, 24
151.7375	.....do	1, 2, 24
151.745	.....do	1, 2
151.760	.....do	3, 30, 47
151.775	.....do	1, 2
151.7825	.....do	1, 2, 24
151.790	.....do	1, 2, 24
151.7975	.....do	1, 2, 24
151.805	.....do	1, 2
151.820	Mobile	13, 22, 47, 51
151.835	Base or Mobile	1, 2
151.8425	.....do	1, 2, 24
151.850	.....do	1, 2, 24
151.8575	.....do	1, 2, 24
151.865	.....do	1, 2
151.880	Mobile	13, 22, 47, 51
151.895	Base or Mobile	1, 2
151.9025	.....do	1, 2, 24
151.910	.....do	1, 2, 24
151.9175	.....do	1, 2, 24
151.925	.....do	
151.940	Mobile	13, 22, 47, 51
151.955	Base or Mobile	
151.9625	.....do	1, 2, 24
151.970	.....do	1, 2, 24
151.9775	.....do	1, 2, 24
152.300	.....do	9
152.3075	.....do	9, 24
152.315	.....do	1, 9
152.3225	.....do	1, 9, 24
152.345	.....do	1, 9
152.3525	.....do	1, 9, 24
152.360	.....do	9
152.3675	.....do	9, 24
152.375	.....do	1, 9
152.3825	.....do	1, 9, 24
152.405	.....do	1, 9
152.4125	.....do	1, 9, 24
152.420	.....do	9
152.4275	.....do	9, 24
152.480	Base	10, 11, 12, 49
154.45625	Mobile	18, 19, 36
154.46375	.....do	18, 19, 35, 37
154.47125	.....do	18, 19, 35
154.515	Base or Mobile	1, 2
154.5275	Mobile	3, 30, 47
154.540	Base or Mobile	1, 2
154.5475	.....do	1, 2, 24
154.555	.....do	1, 2, 46
154.570	Mobile	4, 13, 22
154.600	.....do	4, 14, 22
154.610	Base or Mobile	1, 2, 46
154.625	Base	10, 11, 15, 49
154.640	.....do	10, 11, 15, 24
157.560	Base or Mobile	9
157.5675	.....do	9, 24
157.575	Mobile	1, 9
157.5825	.....do	1, 9, 24

BUSINESS RADIO SERVICE FREQUENCY TABLE—Continued

Frequency or band	Class of station(s)	Limitations
157.605	Mobile	1, 9
157.6125	.....do	1, 9, 24
157.620	Base or Mobile	9
157.6275	.....do	9, 24
157.635	Mobile	1, 9
157.6425	.....do	1, 9, 24
157.665	Mobile	1, 9
157.6725	.....do	1, 9, 24
157.680	.....do	9
157.6875	.....do	9, 24
157.740	Base	10, 11, 12, 49
158.460	.....do	10, 11, 12, 15, 49
169 to 172	Mobile, operational fixed	17
173.20375	Mobile	18, 19, 35
173.2100	.....do	18, 20, 35
173.2375	.....do	18, 19, 36
173.2625	.....do	18, 19, 36
173.2875	.....do	18, 19, 36
173.3125	.....do	18, 19, 36
173.3375	.....do	18, 19, 36
173.3625	.....do	18, 19, 36
173.3900	.....do	18, 20, 35
173.39625	.....do	18, 19, 35
216 to 220	Base or Mobile	21
220–222	Base and mobile	44
406 to 413	Operational fixed	17
450 to 470	Base or Mobile	48
457.5125	Mobile	50
457.525	.....do	4, 14, 22, 23
457.53125	.....do	4, 14, 22, 23, 46
457.53750	.....do	4, 14, 22, 23, 24
457.54375	.....do	4, 14, 22, 23, 46
457.550	.....do	4, 14, 22, 23
457.55625	.....do	4, 14, 22, 23, 46
457.56250	.....do	4, 14, 22, 23, 24
457.56875	.....do	4, 14, 22, 23, 46
457.575	.....do	4, 14, 22, 23
457.58125	.....do	4, 14, 22, 23, 46
457.58750	.....do	4, 14, 22, 23, 24
457.59375	.....do	4, 14, 22, 23, 46
457.600	.....do	4, 14, 22, 23
457.60625	.....do	4, 14, 22, 23, 46
457.61250	.....do	4, 14, 22, 23, 24
457.61875	.....do	4, 14, 22, 23, 46
460.650	Base or Mobile	2, 15, 25, 26
460.65625	.....do	2, 15, 25, 26, 46
460.66250	.....do	2, 15, 24, 25, 26
460.66875	.....do	2, 15, 25, 26, 46
460.675	.....do	2, 15, 25, 26
460.68125	.....do	2, 15, 25, 26, 46
460.68750	.....do	2, 15, 24, 25, 26
460.69375	.....do	2, 15, 25, 26, 46
460.700	.....do	2, 15, 25, 26
460.70625	.....do	2, 15, 25, 26, 46
460.71250	.....do	2, 15, 24, 25, 26
460.71875	.....do	2, 15, 25, 26, 46
460.725	.....do	2, 15, 25, 26
460.73125	.....do	2, 15, 25, 26, 46
460.73750	.....do	2, 15, 24, 25, 26
460.74375	.....do	2, 15, 25, 26, 46
460.750	.....do	2, 15, 25, 26
460.75625	.....do	2, 15, 25, 26, 46
460.76250	.....do	2, 15, 24, 25, 26
460.76875	.....do	2, 15, 25, 26, 46
460.775	.....do	2, 15, 25, 26
460.78125	.....do	2, 15, 25, 26, 46
460.78750	.....do	2, 15, 24, 25, 26
460.79375	.....do	2, 15, 25, 26, 46
460.800	.....do	2, 15, 25, 26
460.80625	.....do	2, 15, 25, 26, 46
460.81250	.....do	2, 15, 24, 25, 26
460.81875	.....do	2, 15, 25, 26, 46

BUSINESS RADIO SERVICE FREQUENCY TABLE—Continued

Frequency or band	Class of station(s)	Limitations
460.825	do	2, 15, 25, 26
460.83125	do	2, 15, 25, 26, 46
460.83750	do	2, 15, 24, 25, 26
460.84375	do	2, 15, 25, 26, 46
460.850	do	2, 15, 25, 26
460.85625	do	2, 15, 25, 26, 46
460.86250	do	2, 15, 24, 25, 26
460.86875	do	2, 15, 25, 26, 46
460.875	do	2, 15, 25, 26
460.88125	do	2, 15, 25, 26, 46
460.88750	do	2, 15, 24, 25, 26
460.89375	do	2, 15, 25, 26, 46
460.900	do	1, 2, 27, 39, 40
460.90625	do	1, 2, 27, 39, 40, 46
460.91250	do	1, 2, 24, 27, 39, 40
460.91875	do	1, 2, 27, 39, 40, 46
460.925	do	1, 2, 27, 39, 40
460.93125	do	1, 2, 27, 39, 40, 46
460.93750	do	1, 2, 24, 27, 39, 40
460.94375	do	1, 2, 27, 39, 40, 46
460.950	do	1, 2, 27, 39, 40
460.95625	do	1, 2, 27, 39, 40, 46
460.96250	do	1, 2, 24, 27, 39, 40
460.96875	do	1, 2, 27, 39, 40, 46
460.975	do	1, 2, 28, 39, 40
460.98125	do	1, 2, 28, 39, 40, 46
460.98750	do	1, 2, 24, 28, 39, 40
460.99375	do	1, 2, 28, 39, 40, 46
461.000	do	1, 2, 28, 39, 40
461.00625	do	1, 2, 28, 39, 40, 46
461.01250	do	1, 2, 24, 28, 39, 40
461.01875	do	1, 2, 28, 39, 40, 46
461.025	do	1, 2, 26
461.03125	do	1, 2, 26, 46
461.03750	do	1, 2, 24, 26
461.04375	do	1, 2, 26, 46
461.050	do	1, 2, 26
461.05625	do	1, 2, 26, 46
461.06250	do	1, 2, 24, 26
461.06875	do	1, 2, 26, 46
461.075	do	1, 2, 26
461.08125	do	1, 2, 26, 46
461.08750	do	1, 2, 24, 26
461.09375	do	1, 2, 26, 46
461.100	do	1, 2, 26
461.10625	do	1, 2, 26, 46
461.11250	do	1, 2, 24, 26
461.11875	do	1, 2, 26, 46
461.125	do	1, 2, 26
461.13125	do	1, 2, 26, 46
461.13750	do	1, 2, 24, 26
461.14375	do	1, 2, 26, 46
461.150	do	1, 2, 26
461.15625	do	1, 2, 26, 46
461.16250	do	1, 2, 24, 26
461.16875	do	1, 2, 26, 46
461.175	do	1, 2, 26
461.18125	do	1, 2, 26, 46
461.18750	do	1, 2, 24, 26
461.19375	do	1, 2, 26, 46
461.200	do	1, 2, 26
461.20625	do	1, 2, 26, 46
461.21250	do	1, 2, 24, 26
461.21875	do	1, 2, 26, 46
461.225	do	1, 2, 26
461.23125	do	1, 2, 26, 46
461.23750	do	1, 2, 24, 26
461.24375	do	1, 2, 26, 46
461.250	do	1, 2, 26
461.25625	do	1, 2, 26, 46
461.26250	do	1, 2, 24, 26
461.26875	do	1, 2, 26, 46

BUSINESS RADIO SERVICE FREQUENCY TABLE—Continued

Frequency or band	Class of station(s)	Limitations
461.275	do	1, 2, 26
461.28125	do	1, 2, 26, 46
461.28750	do	1, 2, 24, 26
461.29375	do	1, 2, 26, 46
461.300	do	1, 2, 26
461.30625	do	1, 2, 26, 46
461.31250	do	1, 2, 24, 26
461.31875	do	1, 2, 26, 46
461.325	do	1, 2, 26
461.33125	do	1, 2, 26, 46
461.33750	do	1, 2, 24, 26
461.34375	do	1, 2, 26, 46
461.350	do	1, 2, 26
461.35625	do	1, 2, 26, 46
461.36250	do	1, 2, 24, 26
461.36875	do	1, 2, 26, 46
461.375	do	1, 2, 26
461.38125	do	1, 2, 26, 46
461.38750	do	1, 2, 24, 26
461.39375	do	1, 2, 26, 46
461.400	do	1, 2, 26
461.40625	do	1, 2, 26, 46
461.41250	do	1, 2, 24, 26
461.41875	do	1, 2, 26, 46
461.425	do	1, 2, 26
461.43125	do	1, 2, 26, 46
461.43750	do	1, 2, 24, 26
461.44375	do	1, 2, 26, 46
461.450	do	1, 2, 26
461.45625	do	1, 2, 26, 46
461.46250	do	1, 2, 24, 26
461.46875	do	1, 2, 26, 46
461.475	do	1, 2, 26
461.48125	do	1, 2, 26, 46
461.48750	do	1, 2, 24, 26
461.49375	do	1, 2, 26, 46
461.500	do	1, 2, 26
461.50625	do	1, 2, 26, 46
461.51250	do	1, 2, 24, 26
461.51875	do	1, 2, 26, 46
461.525	do	1, 2, 26
461.53125	do	1, 2, 26, 46
461.53750	do	1, 2, 24, 26
461.54375	do	1, 2, 26, 46
461.550	do	1, 2, 26
461.55625	do	1, 2, 26, 46
461.56250	do	1, 2, 24, 26
461.56875	do	1, 2, 26, 46
461.575	do	1, 2, 26
461.58125	do	1, 2, 26, 46
461.58750	do	1, 2, 24, 26
461.59375	do	1, 2, 26, 46
461.600	do	1, 2, 26
461.60625	do	1, 2, 26, 46
461.61250	do	1, 2, 24, 26
461.61875	do	1, 2, 26, 46
461.625	do	1, 2, 26
461.63125	do	1, 2, 26, 46
461.63750	do	1, 2, 24, 26
461.64375	do	1, 2, 26, 46
461.650	do	1, 2, 26
461.65625	do	1, 2, 26, 46
461.66250	do	1, 2, 24, 26
461.66875	do	1, 2, 26, 46
461.675	do	1, 2, 26
461.68125	do	1, 2, 26, 46
461.68750	do	1, 2, 24, 26
461.69375	do	1, 2, 26, 46
461.700	do	1, 2, 26
461.70625	do	1, 2, 26, 46
461.71250	do	1, 2, 24, 26
461.71875	do	1, 2, 26, 46

BUSINESS RADIO SERVICE FREQUENCY TABLE—Continued

Frequency or band	Class of station(s)	Limitations
461.725	do	1, 2, 26
461.73125	do	1, 2, 26, 46
461.73750	do	1, 2, 24, 26
461.74375	do	1, 2, 26, 46
461.750	do	1, 2, 26
461.75625	do	1, 2, 26, 46
461.76250	do	1, 2, 24, 26
461.76875	do	1, 2, 26, 46
461.775	do	1, 2, 26
461.78125	do	1, 2, 26, 46
461.78750	do	1, 2, 24, 26
461.79375	do	1, 2, 26, 46
461.800	do	1, 2, 26
461.80625	do	1, 2, 26, 46
461.81250	do	1, 2, 24, 26
461.81875	do	1, 2, 26, 46
461.825	do	1, 2, 26
461.83125	do	1, 2, 26, 46
461.83750	do	1, 2, 24, 26
461.84375	do	1, 2, 26, 46
461.850	do	1, 2, 26
461.85625	do	1, 2, 26, 46
461.86250	do	1, 2, 24, 26
461.86875	do	1, 2, 26, 46
461.875	do	1, 2, 26
461.88125	do	1, 2, 26, 46
461.88750	do	1, 2, 24, 26
461.89375	do	1, 2, 26, 46
461.900	do	1, 2, 26
461.90625	do	1, 2, 26, 46
461.91250	do	1, 2, 24, 26
461.91875	do	1, 2, 26, 46
461.925	do	1, 2, 26
461.93125	do	1, 2, 26, 46
461.93750	do	1, 2, 24, 26
461.94375	do	1, 2, 26, 46
461.950	do	1, 2, 26
461.95625	do	1, 2, 26, 46
461.96250	do	1, 2, 24, 26
461.96875	do	1, 2, 26, 46
461.975	do	1, 2, 26
461.98125	do	1, 2, 26, 46
461.98750	do	1, 2, 24, 26
461.99375	do	1, 2, 26, 46
462.000	do	1, 2, 26
462.00625	do	1, 2, 26, 46
462.01250	do	1, 2, 24, 26
462.01875	do	1, 2, 26, 46
462.025	do	1, 2, 26
462.03125	do	1, 2, 26, 46
462.03750	do	1, 2, 24, 26
462.04375	do	1, 2, 26, 46
462.050	do	1, 2, 26
462.05625	do	1, 2, 26, 46
462.06250	do	1, 2, 24, 26
462.06875	do	1, 2, 26, 46
462.075	do	1, 2, 26
462.08125	do	1, 2, 26, 46
462.08750	do	1, 2, 24, 26
462.09375	do	1, 2, 26, 46
462.100	do	1, 2, 26
462.10625	do	1, 2, 26, 46
462.11250	do	1, 2, 24, 26
462.11875	do	1, 2, 26, 46
462.125	do	1, 2, 26
462.13125	do	1, 2, 26, 46
462.13750	do	1, 2, 24, 26
462.14375	do	1, 2, 26, 46
462.150	do	1, 2, 26
462.15625	do	1, 2, 26, 46
462.16250	do	1, 2, 24, 26
462.16875	do	1, 2, 26, 46

BUSINESS RADIO SERVICE FREQUENCY TABLE—Continued

Frequency or band	Class of station(s)	Limitations
462.175	.....do	1, 2, 26
462.18125	.....do	1, 2, 26, 46
462.18750	.....do	1, 2, 24, 26
462.19375	.....do	1, 2, 26, 46
462.750	Base	10, 49
462.7625	Mobile	50
462.775	Base	10, 49
462.7875	Mobile	50
462.800	Base	10, 49
462.8125	Mobile	50
462.825	Base	10, 49
462.8375	Mobile	50
462.850	Base	10, 49
462.8625	Mobile	50
462.875	Base	10, 49
462.8875	Mobile	50
462.900	Base	10, 49
462.9125	Mobile	50
462.925	Base	10, 49
462.93750	.....do	24, 49
462.94375	.....do	46
463.200	Base or Mobile	1, 2, 26
463.20625	.....do	1, 2, 26, 46
463.21250	.....do	1, 2, 24, 26
463.21875	.....do	1, 2, 26, 46
463.225	.....do	1, 2, 26
463.23125	.....do	1, 2, 26, 46
463.23750	.....do	1, 2, 24, 26
463.24375	.....do	1, 2, 26, 46
463.250	.....do	1, 2, 26
463.25625	.....do	1, 2, 26, 46
463.26250	.....do	1, 2, 24, 26
463.26875	.....do	1, 2, 26, 46
463.275	.....do	1, 2, 26
463.28125	.....do	1, 2, 26, 46
463.28750	.....do	1, 2, 24, 26
463.29375	.....do	1, 2, 26, 46
463.300	.....do	1, 2, 26
463.30625	.....do	1, 2, 26, 46
463.31250	.....do	1, 2, 24, 26
463.31875	.....do	1, 2, 26, 46
463.325	.....do	1, 2, 26
463.33125	.....do	1, 2, 26, 46
463.33750	.....do	1, 2, 24, 26
463.34375	.....do	1, 2, 26, 46
463.350	.....do	1, 2, 26
463.35625	.....do	1, 2, 26, 46
463.36250	.....do	1, 2, 24, 26
463.36875	.....do	1, 2, 26, 46
463.375	.....do	1, 2, 26
463.38125	.....do	1, 2, 26, 46
463.38750	.....do	1, 2, 24, 26
463.39375	.....do	1, 2, 26, 46
463.400	.....do	1, 2, 26
463.40625	.....do	1, 2, 26, 46
463.41250	.....do	1, 2, 24, 26
463.41875	.....do	1, 2, 26, 46
463.425	.....do	1, 2, 26
463.43125	.....do	1, 2, 26, 46
463.43750	.....do	1, 2, 24, 26
463.44375	.....do	1, 2, 26, 46
463.450	.....do	1, 2, 26
463.45625	.....do	1, 2, 26, 46
463.46250	.....do	1, 2, 24, 26
463.46875	.....do	1, 2, 26, 46
463.475	.....do	1, 2, 26
463.48125	.....do	1, 2, 26, 46
463.48750	.....do	1, 2, 24, 26
463.49375	.....do	1, 2, 26, 46
463.500	.....do	1, 2, 26
463.50625	.....do	1, 2, 26, 46
463.51250	.....do	1, 2, 24, 26

BUSINESS RADIO SERVICE FREQUENCY TABLE—Continued

Frequency or band	Class of station(s)	Limitations
463.51875	do	1, 2, 26, 46
463.525	do	1, 2, 26
463.53125	do	1, 2, 26, 46
463.53750	do	1, 2, 24, 26
463.54375	do	1, 2, 26, 46
463.550	do	1, 2, 26
463.55625	do	1, 2, 26, 46
463.56250	do	1, 2, 24, 26
463.56875	do	1, 2, 26, 46
463.575	do	1, 2, 26
463.58125	do	1, 2, 26, 46
463.58750	do	1, 2, 24, 26
463.59375	do	1, 2, 26, 46
463.600	do	1, 2, 26
463.60625	do	1, 2, 26, 46
463.61250	do	1, 2, 24, 26
463.61875	do	1, 2, 26, 46
463.625	do	1, 2, 26
463.63125	do	1, 2, 26, 46
463.63750	do	1, 2, 24, 26
463.64375	do	1, 2, 26, 46
463.650	do	1, 2, 26
463.65625	do	1, 2, 26, 46
463.66250	do	1, 2, 24, 26
463.66875	do	1, 2, 26, 46
463.675	do	1, 2, 26
463.68125	do	1, 2, 26, 46
463.68750	do	1, 2, 24, 26
463.69375	do	1, 2, 26, 46
463.700	do	1, 2, 26
463.70625	do	1, 2, 26, 46
463.71250	do	1, 2, 24, 26
463.71875	do	1, 2, 26, 46
463.725	do	1, 2, 26
463.73125	do	1, 2, 26, 46
463.73750	do	1, 2, 24, 26
463.74375	do	1, 2, 26, 46
463.750	do	1, 2, 26
463.75625	do	1, 2, 26, 46
463.76250	do	1, 2, 24, 26
463.76875	do	1, 2, 26, 46
463.775	do	1, 2, 26
463.78125	do	1, 2, 26, 46
463.78750	do	1, 2, 24, 26
463.79375	do	1, 2, 26, 46
463.800	do	1, 2, 26
463.80625	do	1, 2, 26, 46
463.81250	do	1, 2, 24, 26
463.81875	do	1, 2, 26, 46
463.825	do	1, 2, 26
463.83125	do	1, 2, 26, 46
463.83750	do	1, 2, 24, 26
463.84375	do	1, 2, 26, 46
463.850	do	1, 2, 26
463.85625	do	1, 2, 26, 46
463.86250	do	1, 2, 24, 26
463.86875	do	1, 2, 26, 46
463.875	do	1, 2, 26
463.88125	do	1, 2, 26, 46
463.88750	do	1, 2, 24, 26
463.89375	do	1, 2, 26, 46
463.900	do	1, 2, 26
463.90625	do	1, 2, 26, 46
463.91250	do	1, 2, 24, 26
463.91875	do	1, 2, 26, 46
463.925	do	1, 2, 26
463.93125	do	1, 2, 26, 46
463.93750	do	1, 2, 24, 26
463.94375	do	1, 2, 26, 46
463.950	do	1, 2, 26
463.95625	do	1, 2, 26, 46
463.96250	do	1, 2, 24, 26

BUSINESS RADIO SERVICE FREQUENCY TABLE—Continued

Frequency or band	Class of station(s)	Limitations
463.96875	do	1, 2, 26, 46
463.975	do	1, 2, 26
463.98125	do	1, 2, 26, 46
463.98750	do	1, 2, 24, 26
463.99375	do	1, 2, 26, 46
464.000	do	1, 2, 26
464.00625	do	1, 2, 26, 46
464.01250	do	1, 2, 24, 26
464.01875	do	1, 2, 26, 46
464.025	do	1, 2, 26
464.03125	do	1, 2, 26, 46
464.03750	do	1, 2, 24, 26
464.04375	do	1, 2, 26, 46
464.050	do	1, 2, 26
464.05625	do	1, 2, 26, 46
464.06250	do	1, 2, 24, 26
464.06875	do	1, 2, 26, 46
464.075	do	1, 2, 26
464.08125	do	1, 2, 26, 46
464.08750	do	1, 2, 24, 26
464.09375	do	1, 2, 26, 46
464.100	do	1, 2, 26
464.10625	do	1, 2, 26, 46
464.11250	do	1, 2, 24, 26
464.11875	do	1, 2, 26, 46
464.125	do	1, 2, 26
464.13125	do	1, 2, 26, 46
464.13750	do	1, 2, 24, 26
464.14375	do	1, 2, 26, 46
464.150	do	1, 2, 26
464.15625	do	1, 2, 26, 46
464.16250	do	1, 2, 24, 26
464.16875	do	1, 2, 26, 46
464.175	do	1, 2, 26
464.18125	do	1, 2, 26, 46
464.18750	do	1, 2, 24, 26
464.19375	do	1, 2, 26, 46
464.200	do	1, 2, 26
464.20625	do	1, 2, 26, 46
464.21250	do	1, 2, 24, 26
464.21875	do	1, 2, 26, 46
464.225	do	1, 2, 26
464.23125	do	1, 2, 26, 46
464.23750	do	1, 2, 24, 26
464.24375	do	1, 2, 26, 46
464.250	do	1, 2, 26
464.25625	do	1, 2, 26, 46
464.26250	do	1, 2, 24, 26
464.26875	do	1, 2, 26, 46
464.275	do	1, 2, 26
464.28125	do	1, 2, 26, 46
464.28750	do	1, 2, 24, 26
464.29375	do	1, 2, 26, 46
464.300	do	1, 2, 26
464.30625	do	1, 2, 26, 46
464.31250	do	1, 2, 24, 26
464.31875	do	1, 2, 26, 46
464.325	do	1, 2, 26, 29
464.33125	do	1, 2, 26, 29, 46
464.33750	do	1, 2, 24, 26, 29
464.34375	do	1, 2, 26, 29, 46
464.350	do	1, 2, 26
464.35625	do	1, 2, 26, 46
464.36250	do	1, 2, 24, 26
464.36875	do	1, 2, 26, 46
464.375	do	1, 2, 26, 29
464.38125	do	1, 2, 26, 29, 46
464.38750	do	1, 2, 24, 26, 29
464.39375	do	1, 2, 26, 29, 46
464.400	do	1, 2, 26
464.40625	do	1, 2, 26, 46
464.41250	do	1, 2, 24, 26

BUSINESS RADIO SERVICE FREQUENCY TABLE—Continued

Frequency or band	Class of station(s)	Limitations
464.41875	do	1, 2, 26, 46
464.425	do	1, 2, 26, 29
464.43125	do	1, 2, 26, 29, 46
464.43750	do	1, 2, 24, 26, 29
464.44375	do	1, 2, 26, 29, 46
464.450	do	1, 2, 26
464.45625	do	1, 2, 26, 46
464.46250	do	1, 2, 24, 26
464.46875	do	1, 2, 26, 46
464.475	do	1, 2, 26, 29
464.48125	do	1, 2, 26, 29, 46
464.4875	do	1, 2, 26, 29, 46
464.500	do	3, 30
464.5125	do	1, 2, 26, 29, 46
464.51875	do	1, 2, 26, 29, 46
464.525	do	1, 2, 26, 29
464.53125	do	1, 2, 26, 29, 46
464.5375	do	1, 2, 26, 29, 46
464.550	do	3, 30
464.5625	do	1, 2, 26, 29, 46
464.56875	do	1, 2, 26, 29, 46
464.575	do	1, 2, 26, 29
464.58125	do	1, 2, 26, 29, 46
464.58750	do	1, 2, 24, 26, 29
464.59375	do	1, 2, 26, 29, 46
464.600	do	1, 26
464.60625	do	1, 26, 46
464.61250	do	1, 24, 26
464.61875	do	1, 26, 46
464.625	do	1, 26
464.63125	do	1, 26, 46
464.63750	do	1, 24, 26
464.64375	do	1, 26, 46
464.650	do	1, 26
464.65625	do	1, 26, 46
464.66250	do	1, 24, 26
464.66875	do	1, 26, 46
464.675	do	1, 2, 26, 29
464.68125	do	1, 2, 26, 29, 46
464.68750	do	1, 2, 24, 26, 29
464.69375	do	1, 2, 26, 29, 46
464.700	do	1, 26
464.70625	do	1, 26, 46
464.71250	do	1, 24, 26
464.71875	do	1, 26, 46
464.725	do	1, 26
464.73125	do	1, 26, 46
464.73750	do	1, 24, 26
464.74375	do	1, 26, 46
464.750	do	1, 26
464.75625	do	1, 26, 46
464.76250	do	1, 24, 26
464.76875	do	1, 26, 46
464.775	do	1, 2, 26, 29
464.78125	do	1, 2, 26, 29, 46
464.78750	do	1, 2, 24, 26, 29
464.79375	do	1, 2, 26, 29, 46
464.800	do	1, 2, 26
464.80625	do	1, 2, 26, 46
464.81250	do	1, 2, 24, 26
464.81875	do	1, 2, 26, 46
464.825	do	1, 2, 26, 29
464.83125	do	1, 2, 26, 29, 46
464.83750	do	1, 2, 24, 26, 29
464.84375	do	1, 2, 26, 29, 46
464.850	do	1, 2, 26
464.85625	do	1, 2, 26, 46
464.86250	do	1, 2, 24, 26
464.86875	do	1, 2, 26, 46
464.875	do	1, 2, 26, 29
464.88125	do	1, 2, 26, 29, 46
464.88750	do	1, 2, 24, 26, 29

BUSINESS RADIO SERVICE FREQUENCY TABLE—Continued

Frequency or band	Class of station(s)	Limitations
464.89375	.....do	1, 2, 26, 29, 46
464.900	.....do	1, 2, 26
464.90625	.....do	1, 2, 26, 46
464.91250	.....do	1, 2, 24, 26
464.91875	.....do	1, 2, 26, 46
464.925	.....do	1, 2, 26, 29
464.93125	.....do	1, 2, 26, 29, 46
464.93750	.....do	1, 2, 24, 26, 29
464.94375	.....do	1, 2, 26, 29, 46
464.950	.....do	1, 2, 26
464.95625	.....do	1, 2, 26, 46
464.96250	.....do	1, 2, 24, 26
464.96875	.....do	1, 2, 26, 46
464.975	.....do	1, 2, 26, 29
464.98125	.....do	1, 2, 26, 29, 46
464.98750	.....do	1, 2, 24, 26, 29
465.000	Base	10, 30, 49
465.01250	.....do	24, 30
465.01875	.....do	30, 46
465.650	Mobile	2, 4, 25, 26, 31
465.65625	.....do	2, 4, 25, 26, 31, 46
465.66250	.....do	2, 4, 24, 25, 26, 31
465.66875	.....do	2, 4, 25, 26, 31, 46
465.675	.....do	2, 4, 25, 26, 31
465.68125	.....do	2, 4, 25, 26, 31, 46
465.68750	.....do	2, 4, 24, 25, 26, 31
465.69375	.....do	2, 4, 25, 26, 31, 46
465.700	.....do	2, 4, 25, 26, 31
465.70625	.....do	2, 4, 25, 26, 31, 46
465.71250	.....do	2, 4, 24, 25, 26, 31
465.71875	.....do	2, 4, 25, 26, 31, 46
465.725	.....do	2, 4, 25, 26, 31
465.73125	.....do	2, 4, 25, 26, 31, 46
465.73750	.....do	2, 4, 24, 25, 26, 31
465.74375	.....do	2, 4, 25, 26, 31, 46
465.750	.....do	2, 4, 25, 26, 31
465.75625	.....do	2, 4, 25, 26, 31, 46
465.76250	.....do	2, 4, 24, 25, 26, 31
465.76875	.....do	2, 4, 25, 26, 31, 46
465.775	.....do	2, 4, 25, 26, 31
465.78125	.....do	2, 4, 25, 26, 31, 46
465.78750	.....do	2, 4, 24, 25, 26, 31
465.79375	.....do	2, 4, 25, 26, 31, 46
465.800	.....do	2, 4, 25, 26, 31
465.80625	.....do	2, 4, 25, 26, 31, 46
465.81250	.....do	2, 4, 24, 25, 26, 31
465.81875	.....do	2, 4, 25, 26, 31, 46
465.825	.....do	2, 4, 25, 26, 31
465.83125	.....do	2, 4, 25, 26, 31, 46
465.83750	.....do	2, 4, 24, 25, 26, 31
465.84375	.....do	2, 4, 25, 26, 31, 46
465.850	.....do	2, 4, 25, 26, 31
465.85625	.....do	2, 4, 25, 26, 31, 46
465.86250	.....do	2, 4, 24, 25, 26, 31
465.86875	.....do	2, 4, 25, 26, 31, 46
465.875	.....do	2, 4, 25, 26, 31
465.88125	.....do	2, 4, 25, 26, 31, 46
465.88750	.....do	2, 4, 24, 25, 26, 31
465.89375	.....do	2, 4, 25, 26, 31, 46
465.900	.....do	1, 2, 27, 39
465.90625	.....do	1, 2, 27, 39, 46
465.91250	.....do	1, 2, 24, 27, 39
465.91875	.....do	1, 2, 27, 39, 46
465.925	.....do	1, 2, 27, 39
465.93125	.....do	1, 2, 27, 39, 46
465.93750	.....do	1, 2, 24, 27, 39
465.94375	.....do	1, 2, 27, 39, 46
465.950	.....do	1, 2, 27, 39
465.95625	.....do	1, 2, 27, 39, 46
465.96250	.....do	1, 2, 24, 27, 39
465.96875	.....do	1, 2, 27, 39, 46
465.975	.....do	1, 2, 28, 39

BUSINESS RADIO SERVICE FREQUENCY TABLE—Continued

Frequency or band	Class of station(s)	Limitations
465.98125	do	1, 2, 28, 39, 46
465.98750	do	1, 2, 24, 28, 39
465.99375	do	1, 2, 28, 39, 46
466.000	do	1, 2, 28, 39
466.00625	do	1, 2, 28, 39, 46
466.01250	do	1, 2, 24, 28, 39
466.01875	do	1, 2, 28, 39, 46
466.025	do	1, 2, 26
466.03125	do	1, 2, 26, 46
466.03750	do	1, 2, 24, 26
466.04375	do	1, 2, 26, 46
466.050	do	1, 2, 26
466.05625	do	1, 2, 26, 46
466.06250	do	1, 2, 24, 26
466.06875	do	1, 2, 26, 46
466.075	do	1, 2, 26
466.08125	do	1, 2, 26, 46
466.08750	do	1, 2, 24, 26
466.09375	do	1, 2, 26, 46
466.100	do	1, 2, 26
466.10625	do	1, 2, 26, 46
466.11250	do	1, 2, 24, 26
466.11875	do	1, 2, 26, 46
466.125	do	1, 2, 26
466.13125	do	1, 2, 26, 46
466.13750	do	1, 2, 24, 26
466.14375	do	1, 2, 26, 46
466.150	do	1, 2, 26
466.15625	do	1, 2, 26, 46
466.16250	do	1, 2, 24, 26
466.16875	do	1, 2, 26, 46
466.175	do	1, 2, 26
466.18125	do	1, 2, 26, 46
466.18750	do	1, 2, 24, 26
466.19375	do	1, 2, 26, 46
466.200	do	1, 2, 26
466.20625	do	1, 2, 26, 46
466.21250	do	1, 2, 24, 26
466.21875	do	1, 2, 26, 46
466.225	do	1, 2, 26
466.23125	do	1, 2, 26, 46
466.23750	do	1, 2, 24, 26
466.24375	do	1, 2, 26, 46
466.250	do	1, 2, 26
466.25625	do	1, 2, 26, 46
466.26250	do	1, 2, 24, 26
466.26875	do	1, 2, 26, 46
466.275	do	1, 2, 26
466.28125	do	1, 2, 26, 46
466.28750	do	1, 2, 24, 26
466.29375	do	1, 2, 26, 46
466.300	do	1, 2, 26
466.30625	do	1, 2, 26, 46
466.31250	do	1, 2, 24, 26
466.31875	do	1, 2, 26, 46
466.325	do	1, 2, 26
466.33125	do	1, 2, 26, 46
466.33750	do	1, 2, 24, 26
466.34375	do	1, 2, 26, 46
466.350	do	1, 2, 26
466.35625	do	1, 2, 26, 46
466.36250	do	1, 2, 24, 26
466.36875	do	1, 2, 26, 46
466.375	do	1, 2, 26
466.38125	do	1, 2, 26, 46
466.38750	do	1, 2, 24, 26
466.39375	do	1, 2, 26, 46
466.400	do	1, 2, 26
466.40625	do	1, 2, 26, 46
466.41250	do	1, 2, 24, 26
466.41875	do	1, 2, 26, 46
466.425	do	1, 2, 26

BUSINESS RADIO SERVICE FREQUENCY TABLE—Continued

Frequency or band	Class of station(s)	Limitations
466.43125	do	1, 2, 26, 46
466.43750	do	1, 2, 24, 26
466.44375	do	1, 2, 26, 46
466.450	do	1, 2, 26
466.45625	do	1, 2, 26, 46
466.46250	do	1, 2, 24, 26
466.46875	do	1, 2, 26, 46
466.475	do	1, 2, 26
466.48125	do	1, 2, 26, 46
466.48750	do	1, 2, 24, 26
466.49375	do	1, 2, 26, 46
466.500	do	1, 2, 26
466.50625	do	1, 2, 26, 46
466.51250	do	1, 2, 24, 26
466.51875	do	1, 2, 26, 46
466.525	do	1, 2, 26
466.53125	do	1, 2, 26, 46
466.53750	do	1, 2, 24, 26
466.54375	do	1, 2, 26, 46
466.550	do	1, 2, 26
466.55625	do	1, 2, 26, 46
466.56250	do	1, 2, 24, 26
466.56875	do	1, 2, 26, 46
466.575	do	1, 2, 26
466.58125	do	1, 2, 26, 46
466.58750	do	1, 2, 24, 26
466.59375	do	1, 2, 26, 46
466.600	do	1, 2, 26
466.60625	do	1, 2, 26, 46
466.61250	do	1, 2, 24, 26
466.61875	do	1, 2, 26, 46
466.625	do	1, 2, 26
466.63125	do	1, 2, 26, 46
466.63750	do	1, 2, 24, 26
466.64375	do	1, 2, 26, 46
466.650	do	1, 2, 26
466.65625	do	1, 2, 26, 46
466.66250	do	1, 2, 24, 26
466.66875	do	1, 2, 26, 46
466.675	do	1, 2, 26
466.68125	do	1, 2, 26, 46
466.68750	do	1, 2, 24, 26
466.69375	do	1, 2, 26, 46
466.700	do	1, 2, 26
466.70625	do	1, 2, 26, 46
466.71250	do	1, 2, 24, 26
466.71875	do	1, 2, 26, 46
466.725	do	1, 2, 26
466.73125	do	1, 2, 26, 46
466.73750	do	1, 2, 24, 26
466.74375	do	1, 2, 26, 46
466.750	do	1, 2, 26
466.75625	do	1, 2, 26, 46
466.76250	do	1, 2, 24, 26
466.76875	do	1, 2, 26, 46
466.775	do	1, 2, 26
466.78125	do	1, 2, 26, 46
466.78750	do	1, 2, 24, 26
466.79375	do	1, 2, 26, 46
466.800	do	1, 2, 26
466.80625	do	1, 2, 26, 46
466.81250	do	1, 2, 24, 26
466.81875	do	1, 2, 26, 46
466.825	do	1, 2, 26
466.83125	do	1, 2, 26, 46
466.83750	do	1, 2, 24, 26
466.84375	do	1, 2, 26, 46
466.850	do	1, 2, 26
466.85625	do	1, 2, 26, 46
466.86250	do	1, 2, 24, 26
466.86875	do	1, 2, 26, 46
466.875	do	1, 2, 26

BUSINESS RADIO SERVICE FREQUENCY TABLE—Continued

Frequency or band	Class of station(s)	Limitations
466.88125	do	1, 2, 26, 46
466.88750	do	1, 2, 24, 26
466.89375	do	1, 2, 26, 46
466.900	do	1, 2, 26
466.90625	do	1, 2, 26, 46
466.91250	do	1, 2, 24, 26
466.91875	do	1, 2, 26, 46
466.925	do	1, 2, 26
466.93125	do	1, 2, 26, 46
466.93750	do	1, 2, 24, 26
466.94375	do	1, 2, 26, 46
466.950	do	1, 2, 26
466.95625	do	1, 2, 26, 46
466.96250	do	1, 2, 24, 26
466.96875	do	1, 2, 26, 46
466.975	do	1, 2, 26
466.98125	do	1, 2, 26, 46
466.98750	do	1, 2, 24, 26
466.99375	do	1, 2, 26, 46
467.000	do	1, 2, 26
467.00625	do	1, 2, 26, 46
467.01250	do	1, 2, 24, 26
467.01875	do	1, 2, 26, 46
467.025	do	1, 2, 26
467.03125	do	1, 2, 26, 46
467.03750	do	1, 2, 24, 26
467.04375	do	1, 2, 26, 46
467.050	do	1, 2, 26
467.05625	do	1, 2, 26, 46
467.06250	do	1, 2, 24, 26
467.06875	do	1, 2, 26, 46
467.075	do	1, 2, 26
467.08125	do	1, 2, 26, 46
467.08750	do	1, 2, 24, 26
467.09375	do	1, 2, 26, 46
467.100	do	1, 2, 26
467.10625	do	1, 2, 26, 46
467.11250	do	1, 2, 24, 26
467.11875	do	1, 2, 26, 46
467.125	do	1, 2, 26
467.13125	do	1, 2, 26, 46
467.13750	do	1, 2, 24, 26
467.14375	do	1, 2, 26, 46
467.150	do	1, 2, 26
467.15625	do	1, 2, 26, 46
467.16250	do	1, 2, 24, 26
467.16875	do	1, 2, 26, 46
467.175	do	1, 2, 26
467.18125	do	1, 2, 26, 46
467.18750	do	1, 2, 24, 26
467.19375	do	1, 2, 26, 46
467.74375	do	1, 2, 26, 46
467.750	do	4, 13, 22, 23
467.75625	do	4, 13, 22, 23, 46
467.76250	do	4, 13, 22, 23, 24
467.76875	do	4, 13, 22, 23, 46
467.775	do	4, 13, 22, 23
467.78125	do	4, 13, 22, 23, 46
467.78750	do	4, 13, 22, 23, 24
467.79375	do	4, 13, 22, 23, 46
467.800	do	4, 13, 22, 23
467.80625	do	4, 13, 22, 23, 46
467.81250	do	4, 13, 22, 23, 24
467.81875	do	4, 13, 22, 23, 46
467.825	do	4, 13, 22, 23
467.83125	do	4, 13, 22, 23, 46
467.8375	do	4, 13, 22, 23, 46
467.850	do	4, 13, 22
467.8625	do	50
467.875	do	4, 13, 22
467.8875	do	50
467.900	do	4, 13, 22

BUSINESS RADIO SERVICE FREQUENCY TABLE—Continued

Frequency or band	Class of station(s)	Limitations
467.9125	do	50
467.925	do	4, 13, 22
467.93125	do	1, 2, 46
467.94375	do	1, 2, 46
468.200	do	1, 2, 26
468.20625	do	1, 2, 26, 46
468.21250	do	1, 2, 24, 26
468.21875	do	1, 2, 26, 46
468.225	do	1, 2, 26
468.23125	do	1, 2, 26, 46
468.23750	do	1, 2, 24, 26
468.24375	do	1, 2, 26, 46
468.250	do	1, 2, 26
468.25625	do	1, 2, 26, 46
468.26250	do	1, 2, 24, 26
468.26875	do	1, 2, 26, 46
468.275	do	1, 2, 26
468.28125	do	1, 2, 26, 46
468.28750	do	1, 2, 24, 26
468.29375	do	1, 2, 26, 46
468.300	do	1, 2, 26
468.30625	do	1, 2, 26, 46
468.31250	do	1, 2, 24, 26
468.31875	do	1, 2, 26, 46
468.325	do	1, 2, 26
468.33125	do	1, 2, 26, 46
468.33750	do	1, 2, 24, 26
468.34375	do	1, 2, 26, 46
468.350	do	1, 2, 26
468.35625	do	1, 2, 26, 46
468.36250	do	1, 2, 24, 26
468.36875	do	1, 2, 26, 46
468.375	do	1, 2, 26
468.38125	do	1, 2, 26, 46
468.38750	do	1, 2, 24, 26
468.39375	do	1, 2, 26, 46
468.400	do	1, 2, 26
468.40625	do	1, 2, 26, 46
468.41250	do	1, 2, 24, 26
468.41875	do	1, 2, 26, 46
468.425	do	1, 2, 26
468.43125	do	1, 2, 26, 46
468.43750	do	1, 2, 24, 26
468.44375	do	1, 2, 26, 46
468.450	do	1, 2, 26
468.45625	do	1, 2, 26, 46
468.46250	do	1, 2, 24, 26
468.46875	do	1, 2, 26, 46
468.475	do	1, 2, 26
468.48125	do	1, 2, 26, 46
468.48750	do	1, 2, 24, 26
468.49375	do	1, 2, 26, 46
468.500	do	1, 2, 26
468.50625	do	1, 2, 26, 46
468.51250	do	1, 2, 24, 26
468.51875	do	1, 2, 26, 46
468.525	do	1, 2, 26
468.53125	do	1, 2, 26, 46
468.53750	do	1, 2, 24, 26
468.54375	do	1, 2, 26, 46
468.550	do	1, 2, 26
468.55625	do	1, 2, 26, 46
468.56250	do	1, 2, 24, 26
468.56875	do	1, 2, 26, 46
468.575	do	1, 2, 26
468.58125	do	1, 2, 26, 46
468.58750	do	1, 2, 24, 26
468.59375	do	1, 2, 26, 46
468.600	do	1, 2, 26
468.60625	do	1, 2, 26, 46
468.61250	do	1, 2, 24, 26
468.61875	do	1, 2, 26, 46

BUSINESS RADIO SERVICE FREQUENCY TABLE—Continued

Frequency or band	Class of station(s)	Limitations
468.625	do	1, 2, 26
468.63125	do	1, 2, 26, 46
468.63750	do	1, 2, 24, 26
468.64375	do	1, 2, 26, 46
468.650	do	1, 2, 26
468.65625	do	1, 2, 26, 46
468.66250	do	1, 2, 24, 26
468.66875	do	1, 2, 26, 46
468.675	do	1, 2, 26
468.68125	do	1, 2, 26, 46
468.68750	do	1, 2, 24, 26
468.69375	do	1, 2, 26, 46
468.700	do	1, 2, 26
468.70625	do	1, 2, 26, 46
468.71250	do	1, 2, 24, 26
468.71875	do	1, 2, 26, 46
468.725	do	1, 2, 26
468.73125	do	1, 2, 26, 46
468.73750	do	1, 2, 24, 26
468.74375	do	1, 2, 26, 46
468.750	do	1, 2, 26
468.75625	do	1, 2, 26, 46
468.76250	do	1, 2, 24, 26
468.76875	do	1, 2, 26, 46
468.775	do	1, 2, 26
468.78125	do	1, 2, 26, 46
468.78750	do	1, 2, 24, 26
468.79375	do	1, 2, 26, 46
468.800	do	1, 2, 26
468.80625	do	1, 2, 26, 46
468.81250	do	1, 2, 24, 26
468.81875	do	1, 2, 26, 46
468.825	do	1, 2, 26
468.83125	do	1, 2, 26, 46
468.83750	do	1, 2, 24, 26
468.84375	do	1, 2, 26, 46
468.850	do	1, 2, 26
468.85625	do	1, 2, 26, 46
468.86250	do	1, 2, 24, 26
468.86875	do	1, 2, 26, 46
468.875	do	1, 2, 26
468.88125	do	1, 2, 26, 46
468.88750	do	1, 2, 24, 26
468.89375	do	1, 2, 26, 46
468.900	do	1, 2, 26
468.90625	do	1, 2, 26, 46
468.91250	do	1, 2, 24, 26
468.91875	do	1, 2, 26, 46
468.925	do	1, 2, 26
468.93125	do	1, 2, 26, 46
468.93750	do	1, 2, 24, 26
468.94375	do	1, 2, 26, 46
468.950	do	1, 2, 26
468.95625	do	1, 2, 26, 46
468.96250	do	1, 2, 24, 26
468.96875	do	1, 2, 26, 46
468.975	do	1, 2, 26
468.98125	do	1, 2, 26, 46
468.98750	do	1, 2, 24, 26
468.99375	do	1, 2, 26, 46
469.000	do	1, 2, 26
469.00625	do	1, 2, 26, 46
469.01250	do	1, 2, 24, 26
469.01875	do	1, 2, 26, 46
469.025	do	1, 2, 26
469.03125	do	1, 2, 26, 46
469.03750	do	1, 2, 24, 26
469.04375	do	1, 2, 26, 46
469.050	do	1, 2, 26
469.05625	do	1, 2, 26, 46
469.06250	do	1, 2, 24, 26
469.06875	do	1, 2, 26, 46

BUSINESS RADIO SERVICE FREQUENCY TABLE—Continued

Frequency or band	Class of station(s)	Limitations
469.075	do	1, 2, 26
469.08125	do	1, 2, 26, 46
469.08750	do	1, 2, 24, 26
469.09375	do	1, 2, 26, 46
469.100	do	1, 2, 26
469.10625	do	1, 2, 26, 46
469.11250	do	1, 2, 24, 26
469.11875	do	1, 2, 26, 46
469.125	do	1, 2, 26
469.13125	do	1, 2, 26, 46
469.13750	do	1, 2, 24, 26
469.14375	do	1, 2, 26, 46
469.150	do	1, 2, 26
469.15625	do	1, 2, 26, 46
469.16250	do	1, 2, 24, 26
469.16875	do	1, 2, 26, 46
469.175	do	1, 2, 26
469.18125	do	1, 2, 26, 46
469.18750	do	1, 2, 24, 26
469.19375	do	1, 2, 26, 46
469.200	do	1, 2, 26
469.20625	do	1, 2, 26, 46
469.21250	do	1, 2, 24, 26
469.21875	do	1, 2, 26, 46
469.225	do	1, 2, 26
469.23125	do	1, 2, 26, 46
469.23750	do	1, 2, 24, 26
469.24375	do	1, 2, 26, 46
469.250	do	1, 2, 26
469.25625	do	1, 2, 26, 46
469.26250	do	1, 2, 24, 26
469.26875	do	1, 2, 26, 46
469.275	do	1, 2, 26
469.28125	do	1, 2, 26, 46
469.28750	do	1, 2, 24, 26
469.29375	do	1, 2, 26, 46
469.300	do	1, 2, 26
469.30625	do	1, 2, 26, 46
469.31250	do	1, 2, 24, 26
469.31875	do	1, 2, 26, 46
469.325	do	1, 2, 26
469.33125	do	1, 2, 26, 46
469.33750	do	1, 2, 24, 26
469.34375	do	1, 2, 26, 46
469.350	do	1, 2, 26
469.35625	do	1, 2, 26, 46
469.36250	do	1, 2, 24, 26
469.36875	do	1, 2, 26, 46
469.375	do	1, 2, 26
469.38125	do	1, 2, 26, 46
469.38750	do	1, 2, 24, 26
469.39375	do	1, 2, 26, 46
469.400	do	1, 2, 26
469.40625	do	1, 2, 26, 46
469.41250	do	1, 2, 24, 26
469.41875	do	1, 2, 26, 46
469.425	do	1, 2, 26
469.43125	do	1, 2, 26, 46
469.43750	do	1, 2, 24, 26
469.44375	do	1, 2, 26, 46
469.450	do	1, 2, 26
469.45625	do	1, 2, 26, 46
469.46250	do	1, 2, 24, 26
469.46875	do	1, 2, 26, 46
469.475	do	1, 2, 26
469.48125	do	1, 2, 26, 46
469.4875	do	1, 2, 26, 46
469.500	do	3, 30, 47
469.5125	do	1, 2, 26, 46
469.51875	do	1, 2, 26, 46
469.525	do	1, 2, 26
469.53125	do	1, 2, 26, 46

BUSINESS RADIO SERVICE FREQUENCY TABLE—Continued

Frequency or band	Class of station(s)	Limitations
469.5375	do	1, 2, 26, 46
469.550	do	3, 30, 47
469.5625	do	1, 2, 26, 46
469.56875	do	1, 2, 26, 46
469.575	do	1, 2, 26
469.58125	do	1, 2, 26, 46
469.58750	do	1, 2, 24, 26
469.59375	do	1, 2, 26, 46
469.600	do	1, 26
469.60625	do	1, 26, 46
469.61250	do	1, 24, 26
469.61875	do	1, 26, 46
469.625	do	1, 26
469.63125	do	1, 26, 46
469.63750	do	1, 24, 26
469.64375	do	1, 26, 46
469.650	do	1, 26
469.65625	do	1, 26, 46
469.66250	do	1, 24, 26
469.66875	do	1, 26, 46
469.675	do	1, 2, 26
469.68125	do	1, 2, 26, 46
469.68750	do	1, 2, 24, 26
469.69375	do	1, 2, 26, 46
469.700	do	1, 26
469.70625	do	1, 26, 46
469.71250	do	1, 24, 26
469.71875	do	1, 26, 46
469.725	do	1, 26
469.73125	do	1, 26, 46
469.73750	do	1, 24, 26
469.74375	do	1, 26, 46
469.750	do	1, 26
469.75625	do	1, 26, 46
469.76250	do	1, 24, 26
469.76875	do	1, 26, 46
469.775	do	1, 2, 26
469.78125	do	1, 2, 26, 46
469.78750	do	1, 2, 24, 26
469.79375	do	1, 2, 26, 46
469.800	do	1, 2, 26
469.80625	do	1, 2, 26, 46
469.81250	do	1, 2, 24, 26
469.81875	do	1, 2, 26, 46
469.825	do	1, 2, 26
469.83125	do	1, 2, 26, 46
469.83750	do	1, 2, 24, 26
469.84375	do	1, 2, 26, 46
469.8625	do	50
469.875	do	1, 2, 26
469.88125	do	1, 2, 26, 46
469.88750	do	1, 2, 24, 26
469.89375	do	1, 2, 26, 46
469.900	do	1, 2, 26
469.90625	do	1, 2, 26, 46
469.91250	do	1, 2, 24, 26
469.91875	do	1, 2, 26, 46
469.925	do	1, 2, 26
469.93125	do	1, 2, 26, 46
469.93750	do	1, 2, 24, 26
469.94375	do	1, 2, 26, 46
469.950	do	1, 2, 26
469.95625	do	1, 2, 26, 46
469.96250	do	1, 2, 24, 26
469.96875	do	1, 2, 26, 46
469.975	do	1, 2, 26
469.98125	do	1, 2, 26, 46
470 to 512	Base or Mobile	32
806 to 821	Mobile	33
851 to 866	Base or Mobile	33
896 to 901	Mobile	33
928 and above	Operational fixed	34

BUSINESS RADIO SERVICE FREQUENCY TABLE—Continued

Frequency or band	Class of station(s)	Limitations
929–930	Base only	42
935 to 940	Base or Mobile	33
1427 to 1435	Operational fixed, base or mobile	21
2450 to 2500	Base or Mobile	43
10,550 to 10,680*	Base or Mobile	

*The frequencies in the band 10.55–10.68 GHz are available for Digital Termination Systems and for associated internodal links in the Point-to-Point Microwave Radio Service. No new licenses will be issued under this Subpart but current licenses will be renewed.

(c) * * *

(23) * * *

Mobile relay (MHz)	Mobile (MHz)
457.525	467.750
457.53125	467.75625
457.5375	467.7625
457.54375	467.76875
457.550	467.775
457.55625	467.78125
457.5625	467.7875
457.56875	467.79375
457.575	467.800
457.58125	467.80625
457.5875	467.8125
457.59375	467.81875
457.600	467.825
457.60625	467.83125
457.6125	.....
457.61875	.....

(24) This frequency is not available in the 150–170 MHz band until August 18, 1996. This frequency will be assigned with an authorized bandwidth not to exceed 11.25 kHz. In the 450–470 MHz band, secondary telemetry operations pursuant to § 90.238(e) will be authorized on this frequency.

* * * * *

(38) [Reserved]

* * * * *

(46) This frequency is not available until August 18, 1996. After August 18, 1996 this frequency will be assigned with an authorized bandwidth not to exceed 6 kHz.

(47) This frequency will be assigned with an authorized bandwidth not to exceed 11.25 kHz.

(48) Assignment of frequencies in this band are subject to the provisions of § 90.173.

(49) This frequency will be authorized a channel bandwidth of 25 kHz.

(50) This frequency is available for systems first licensed prior to August 18, 1995. No new systems will be authorized after August 18, 1995, but prior authorized systems may be modified, expanded, and renewed.

(51) Operation on this frequency is limited to a maximum output power of 1 watt; and each station authorized will be classified and licensed as a mobile station. Any units of such a station, however, may provide the operational functions of a base or fixed station on a secondary basis to mobile service operations, Provided, That the separation between the control point and the center of the radiating portion of the antenna of any units so used does not exceed 8 m (25 ft).

(d) * * *

(4) Low power mobile stations of 100 mw or less output power used for one-way, non-voice medical telemetry operations in hospitals or in medical convalescent centers are subject to the provisions of § 90.238.

* * * * *

(e) * * *

(4) Frequencies in the 25–50 MHz, 150–170 MHz, 450–512 MHz and 902–928 MHz bands may be assigned for the operation of Location and Monitoring Service (LMS) systems in accordance with the provisions of subpart M of this part, notwithstanding this limitation.

* * * * *

16. Section 90.79 is amended by revising the table of frequencies in paragraph (c), revising limitation (23), and adding limitations (29), (30), and (31) in paragraph (d), and revising paragraph (f)(3) to read as follows:

§ 90.79 Manufacturers Radio Service.

* * * * *

(c) * * *

MANUFACTURERS RADIO SERVICE FREQUENCY TABLE

Frequency or band	Class of station(s)	Limitations
Megahertz:		
72–76	Operational fixed	25
72.02	Mobile	1, 2
72.04	.....do	1, 2
72.06	.....do	1, 2
72.08	.....do	1, 2, 3
72.10	.....do	1, 2
72.12	.....do	1, 2
72.14	.....do	1, 2
72.16	.....do	1, 2, 3
72.18	.....do	1, 2
72.20	.....do	1, 2
72.22	.....do	1, 2
72.24	.....do	1, 2, 3
72.26	.....do	1, 2
72.28	.....do	1, 2
72.30	.....do	1, 2
72.32	.....do	1, 2, 3
72.34	.....do	1, 2
72.36	.....do	1, 2
72.38	.....do	1, 2
72.40	.....do	1, 2, 3
72.44	.....do	2, 4

MANUFACTURERS RADIO SERVICE FREQUENCY TABLE—Continued

Frequency or band	Class of station(s)	Limitations
72.48	do	2, 4
72.52	do	2, 4
72.56	do	2, 4
72.60	do	2, 4
74.61	do	28
74.63	do	28
74.65	do	28
74.67	do	28
74.69	do	28
74.71	do	28
74.73	do	28
74.75	do	28
74.77	do	28
74.79	do	28
75.21	do	28
75.23	do	28
75.25	do	28
75.27	do	28
75.29	do	28
75.31	do	28
75.33	do	28
75.35	do	28
75.37	do	28
75.39	do	28
75.44	do	2, 4
75.48	do	2, 4
75.52	do	2, 4
75.56	do	2, 4
75.60	do	2, 4
150 to 170	Base or mobile	30
153.050	do	5, 21, 22
153.0575	do	5, 21, 22, 23
153.065	do	5
153.0725	do	5, 23
153.080	do	5
153.0875	do	5, 23
153.095	do	5
153.1025	do	5, 23
153.110	do	5
153.1175	do	5, 23
153.125	do	5, 21, 22
153.1325	do	5, 21, 22, 23
153.140	do	5
153.1475	do	5, 23
153.155	do	5
153.1625	do	5, 23
153.170	do	5
153.1775	do	5, 23
153.185	do	5
153.1925	do	5, 23
153.200	do	5
153.2075	do	5, 23
153.215	do	5
153.2225	do	5, 23
153.230	do	5
153.2375	do	5, 23
153.245	do	5
153.2525	do	5, 23
153.260	do	5
153.2675	do	5, 23
153.275	do	5
153.2825	do	5, 23
153.290	do	5
153.2975	do	5, 23
153.305	do	5
153.3125	do	5, 23
153.320	do	5
153.3275	do	5, 23
153.335	do	5, 21
153.3425	do	5, 21, 23
153.350	do	5, 21
153.3575	do	5, 21, 23

MANUFACTURERS RADIO SERVICE FREQUENCY TABLE—Continued

Frequency or band	Class of station(s)	Limitations
153.365	.....do	5, 21
153.3725	.....do	5, 21, 23
153.380	.....do	5, 21
153.3875	.....do	5, 21, 23
153.395	.....do	5, 21
153.4025	.....do	5, 21, 23
154.45625	Fixed or mobile	6, 9, 10, 19
154.46375	.....do	6, 7, 9, 10, 20
154.47125	.....do	6, 7, 9, 10
154.47875	.....do	6, 9, 10, 19
158.280	Base or mobile	5
158.2875	.....do	5, 23
158.295	.....do	5
158.3025	.....do	5, 23
158.310	.....do	5
158.3175	.....do	5, 23
158.325	.....do	5, 21, 22
158.3325	.....do	5, 21, 22, 23
158.415	.....do	5, 21, 22
158.4225	.....do	5, 21, 22, 23
158.430	.....do	5
158.4375	.....do	5, 23
169–172	Mobile	26
173.20375	Fixed or mobile	6, 7, 9, 10
173.2100	.....do	7, 8, 9, 10
173.2375	.....do	6, 9, 10, 19
173.2625	.....do	6, 9, 10, 19
173.2875	.....do	6, 9, 10, 19
173.3125	.....do	6, 9, 10, 19
173.3375	.....do	6, 9, 10, 19
173.3625	.....do	6, 9, 10, 19
173.3900	.....do	7, 8, 9, 10
173.39625	.....do	6, 7, 9, 10
216–220	Base or mobile	11
220–222	Base and mobile	27
450–470	Fixed, base, or mobile	12, 30
451.1625	Mobile	31
451.175	Base or mobile	13
451.18125	.....do	13, 29
451.18750	.....do	13, 23
451.19375	.....do	13, 29
451.2125	Mobile	31
451.225	Base or mobile	13
451.23125	.....do	13, 29
451.23750	.....do	13, 23
451.24375	.....do	13, 29
451.2625	Mobile	31
451.275	Base or mobile	13
451.28125	.....do	13, 29
451.28750	.....do	13, 23
451.29375	.....do	13, 29
451.3625	Mobile	31
451.375	Base or mobile	13
451.38125	.....do	13, 29
451.38750	.....do	13, 23
451.39375	.....do	13, 29
451.4125	Mobile	31
451.425	Base or mobile	13
451.43125	.....do	13, 29
451.43750	.....do	13, 23
451.44375	.....do	13, 29
451.4625	Mobile	31
451.475	Base or mobile	13
451.48125	.....do	13, 29
451.48750	.....do	13, 23
451.49375	.....do	13, 29
451.5125	Mobile	31
451.525	Base or mobile	13
451.53125	.....do	13, 29
451.53750	.....do	13, 23
451.54375	.....do	13, 29
451.5625	Mobile	31

MANUFACTURERS RADIO SERVICE FREQUENCY TABLE—Continued

Frequency or band	Class of station(s)	Limitations
451.575	Base or mobile	13
451.58125	.....do	13, 29
451.58750	.....do	13, 23
451.59375	.....do	13, 29
451.6125	Mobile	31
451.625	Base or mobile	13
451.63125	.....do	13, 29
451.63750	.....do	13, 23
451.64375	.....do	13, 29
451.6625	Mobile	31
451.675	Base or mobile	13
451.68125	.....do	13, 29
451.68750	.....do	13, 23
451.69375	.....do	13, 29
456.1625	Mobile	31
456.175	.....do	13
456.18125	.....do	13, 29
456.18750	.....do	13, 23
456.19375	.....do	13, 29
456.2125	.....do	31
456.225	.....do	13
456.23125	.....do	13, 29
456.23750	.....do	13, 23
456.24375	.....do	13, 29
456.2625	.....do	31
456.275	.....do	13
456.28125	.....do	13, 29
456.28750	.....do	13, 23
456.29375	.....do	13, 29
456.3625	.....do	31
456.375	.....do	13
456.38125	.....do	13, 29
456.38750	.....do	13, 23
456.39375	.....do	13, 29
456.4125	.....do	31
456.425	.....do	13
456.43125	.....do	13, 29
456.43750	.....do	13, 23
456.44375	.....do	13, 29
456.4625	.....do	31
456.475	.....do	13
456.48125	.....do	13, 29
456.48750	.....do	13, 23
456.49375	.....do	13, 29
456.5125	.....do	31
456.525	.....do	13
456.53125	.....do	13, 29
456.53750	.....do	13, 23
456.54375	.....do	13, 29
456.5625	.....do	31
456.575	.....do	13
456.58125	.....do	13, 29
456.58750	.....do	13, 23
456.59375	.....do	13, 29
456.6125	.....do	31
456.625	.....do	13
456.63125	.....do	13, 29
456.63750	.....do	13, 23
456.64375	.....do	13, 29
456.6625	.....do	31
456.675	.....do	13
456.68125	.....do	13, 29
456.68750	.....do	13, 23
456.69375	.....do	13, 29
462.1875	.....do	31
462.200	Base or mobile	
462.20625	.....do	29
462.21250	.....do	23
462.21875	.....do	29
462.225	.....do	
462.23125	.....do	29
462.23750	.....do	23

MANUFACTURERS RADIO SERVICE FREQUENCY TABLE—Continued

Frequency or band	Class of station(s)	Limitations
462.24375	do	29
462.250	do	
462.25625	do	29
462.26250	do	23
462.26875	do	29
462.275	do	
462.28125	do	29
462.28750	do	23
462.29375	do	29
462.300	do	
462.30625	do	29
462.31250	do	23
462.31875	do	29
462.325	do	
462.33125	do	29
462.33750	do	23
462.34375	do	29
462.350	do	
462.35625	do	29
462.36250	do	23
462.36875	do	29
462.375	do	
462.38125	do	29
462.38750	do	23
462.39375	do	29
462.400	do	
462.40625	do	29
462.41250	do	23
462.41875	do	29
462.425	do	
462.43125	do	29
462.43750	do	23
462.44375	do	29
462.450	do	
462.45625	do	29
462.46250	do	23
462.46875	do	29
462.475	do	13
462.48125	do	13, 29
462.48750	do	13, 23
462.49375	do	13, 29
462.500	do	
462.50625	do	29
462.51250	do	23
462.51875	do	29
462.525	do	13
462.53125	do	13, 29, 29
467.1875	Mobile	31
467.200	do	
467.20625	do	29
467.21250	do	23
467.21875	do	29
467.225	do	
467.23125	do	29
467.23750	do	23
467.24375	do	29
467.250	do	
467.25625	do	29
467.26250	do	23
467.26875	do	29
467.275	do	
467.28125	do	29
467.28750	do	23
467.29375	do	29
467.300	do	
467.30625	do	29
467.31250	do	23
467.31875	do	29
467.325	do	
467.33125	do	29
467.33750	do	23
467.34375	do	29

MANUFACTURERS RADIO SERVICE FREQUENCY TABLE—Continued

Frequency or band	Class of station(s)	Limitations
467.350	.....do	
467.35625	.....do	29
467.36250	.....do	23
467.36875	.....do	29
467.375	.....do	
467.38125	.....do	29
467.38750	.....do	23
467.39375	.....do	29
467.400	.....do	
467.40625	.....do	29
467.41250	.....do	23
467.41875	.....do	29
467.425	.....do	
467.43125	.....do	29
467.43750	.....do	23
467.44375	.....do	29
467.450	.....do	
467.45625	.....do	29
467.46250	.....do	23
467.46875	.....do	29
467.475	.....do	13
467.48125	.....do	13, 29
467.48750	.....do	13, 23
467.49375	.....do	13, 29
467.500	.....do	
467.50625	.....do	29
467.51250	.....do	23
467.51875	.....do	29
467.525	.....do	13
467.53125	.....do	13, 29
470 to 512	Base or mobile	14
806 to 821	Mobile	15
851 to 866	Base or mobile	15
896 to 901	Mobile	15
928 and above	Operational fixed	16
929 to 930	Base only	24
935 to 940	Base or mobile	15
1427 to 1435	Operational fixed, base or mobile	1
2450 to 2500	Base or mobile	17
8400 to 8500	.....do	18
10,550 to 10,680*	.....do	

*The frequencies in the band 10.55–10.68 GHz are available for Digital Termination Systems and for associated internodal links in the Point-to-Point Microwave Radio Service. No new licenses will be issued under this Subpart but current licenses will be renewed.

(d) * * *

(23) This frequency is not available in the 150–170 MHz band until August 18, 1996. This frequency will be assigned with an authorized bandwidth not to exceed 11.25 kHz. In the 450–470 MHz band, secondary telemetry operations pursuant to § 90.238(e) will be authorized on this frequency.

* * * * *

(29) This frequency is not available until August 18, 1996. After August 18, 1996 this frequency will be assigned with an authorized bandwidth not to exceed 6 kHz.

(30) Assignment of frequencies in this band are subject to the provisions of § 90.173.

(31) This frequency is available for systems first licensed prior to August 18, 1995. No new systems will be authorized after August 18, 1995, but prior authorized systems may be modified, expanded, and renewed.

* * * * *

(f) * * *

(3) Frequencies in the 25–50 MHz, 150–170 MHz, 450–512 MHz and 902–928 MHz bands may be assigned for the operation of Location and Monitoring Service (LMS) systems in accordance with the provisions of subpart M of this part, notwithstanding this limitation.

17. Section 90.81 is amended by revising the table of frequencies in paragraph (c), revising limitation (11), and adding limitations (16), (17), and (18) in paragraph (d), and revising paragraph (f)(3) to read as follows:

§ 90.81 Telephone Maintenance Radio Service.

* * * * *

(c) * * *

TELEPHONE MAINTENANCE RADIO SERVICE FREQUENCY TABLE

Frequency or band	Class of station(s)	Limitations
Kilohertz:		
2,000 to 25,000	Fixed, base or mobile	14
Megahertz:		
35.16	Base or mobile	

TELEPHONE MAINTENANCE RADIO SERVICE FREQUENCY TABLE—Continued

Frequency or band	Class of station(s)	Limitations
43.16	Mobile	
72–76	Operational fixed	13
150 to 170	Base or mobile	17
151.985	Base or mobile	
152.9925	.....do	16
158.34	Mobile	
158.3475	.....do	11
169–172	.....do	15
216 to 220	Base or mobile	2
220–222	Base and mobile	1
450 to 470	Fixed, base, or mobile	3, 17
451.1625	Mobile	18
451.175	Base or mobile	4
451.18125	.....do	4, 16
451.18750	.....do	4, 11
451.19375	.....do	4, 16
451.2125	Mobile	18
451.225	Base or mobile	4
451.23125	.....do	4, 16
451.23750	.....do	4, 11
451.24375	.....do	4, 16
451.2625	Mobile	18
451.275	Base or mobile	4
451.28125	.....do	4, 16
451.28750	.....do	4, 11
451.29375	.....do	4, 16
451.300	.....do.	
451.30625	.....do	16
451.31250	.....do	11
451.31875	.....do	16
451.325	.....do.	
451.33125	.....do	16
451.33750	.....do	11
451.34375	.....do	16
451.350	.....do.	
451.35625	.....do	16
451.36250	.....do	11
451.36875	.....do	16
451.375	.....do	4
451.38125	.....do	4, 16
451.38750	.....do	4, 11
451.39375	.....do	4, 16
451.400	.....do.	
451.40625	.....do	16
451.41250	.....do	11
451.41875	.....do	16
451.425	.....do	4
451.43125	.....do	4, 16
451.43750	.....do	4, 11
451.44375	.....do	4, 16
451.450	.....do.	
451.45625	.....do	16
451.46250	.....do	11
451.46875	.....do	16
451.475	.....do	4
451.48125	.....do	4, 16
451.48750	.....do	4, 11
451.49375	.....do	4, 16
451.500	.....do.	
451.50625	.....do	16
451.51250	.....do	11
451.51875	.....do	16
451.525	.....do	4
451.53125	.....do	4, 16
451.53750	.....do	4, 11
451.54375	.....do	4, 16
451.5625	Mobile	18
451.575	Base or mobile	4
451.58125	.....do	4, 16
451.58750	.....do	4, 11
451.59375	.....do	4, 16
451.6125	Mobile	18

TELEPHONE MAINTENANCE RADIO SERVICE FREQUENCY TABLE—Continued

Frequency or band	Class of station(s)	Limitations
451.625	Base or mobile	4
451.63125	do	4, 16
451.63750	do	4, 11
451.64375	do	4, 16
451.6625	Mobile	18
451.675	Base or mobile	4
451.68125	do	4, 16
451.68750	do	4, 11
451.69375	do	4, 16
456.1625	Mobile	18
456.175	do	4
456.18125	do	4, 16
456.18750	do	4, 11
456.19375	do	4, 16
456.2125	do	18
456.225	do	4
456.23125	do	4, 16
456.23750	do	4, 11
456.24375	do	4, 16
456.2625	do	18
456.275	do	4
456.28125	do	4, 16
456.28750	do	4, 11
456.29375	do	4, 16
456.300	do	5
456.30625	do	5, 16
456.31250	do	5, 11
456.31875	do	5, 16
456.325	do	5
456.33125	do	5, 16
456.33750	do	5, 11
456.34375	do	5, 16
456.350	do	5
456.35625	do	5, 16
456.36250	do	5, 11
456.36875	do	5, 16
456.375	do	4
456.38125	do	4, 16
456.38750	do	4, 11
456.39375	do	4, 16
456.400	do	5
456.40625	do	5, 16
456.41250	do	5, 11
456.41875	do	5, 16
456.425	do	4
456.43125	do	4, 16
456.43750	do	4, 11
456.44375	do	4, 16
456.450	do	5
456.45625	do	5, 16
456.46250	do	5, 11
456.46875	do	5, 16
456.475	do	4
456.48125	do	4, 16
456.48750	do	4, 11
456.49375	do	4, 16
456.500	do	5
456.50625	do	5, 16
456.51250	do	5, 11
456.51875	do	5, 16
456.525	do	4
456.53125	do	4, 16
456.53750	do	4, 11
456.54375	do	4, 16
456.5625	do	18
456.575	do	4
456.58125	do	4, 16
456.58750	do	4, 11
456.59375	do	4, 16
456.6125	do	18
456.625	do	4
456.63125	do	4, 16

TELEPHONE MAINTENANCE RADIO SERVICE FREQUENCY TABLE—Continued

Frequency or band	Class of station(s)	Limitations
456.63750	.....do	4, 11
456.64375	.....do	4, 16
456.6625	.....do	18
456.675	.....do	4
456.68125	.....do	4, 16
456.68750	.....do	4, 11
456.69375	.....do	4, 16
462.4625	.....do	18
462.475	Base or mobile	4
462.48125	.....do	4, 16
462.48750	.....do	4, 11
462.49375	.....do	4, 16
462.5125	Mobile	18
462.525	Base or mobile	4
462.53125	.....do	4, 16
467.4625	Mobile	18
467.475	.....do	4
467.48125	.....do	4, 16
467.48750	.....do	4, 11
467.49375	.....do	4, 16
467.5125	.....do	18
467.525	.....do	4
467.53125	.....do	4, 16
470 to 512	Base or mobile	6
806 to 821	Mobile	7
851 to 866	Base or mobile	7
896 to 901	Mobile	7
928 and above	Operational fixed	8
929–930	Base only	12
935 to 940	Base or mobile	7
1427 to 1435	Operational fixed, base or mobile	2
2450 to 2500	Base or mobile	9
8400 to 8500	.....do	10
10,550 to 10,680*	.....do	

*The frequencies in the band 10.55–10.68 GHz are available for Digital Termination Systems and for associated internodal links in the Point-to-Point Microwave Radio Service. No new licenses will be issued under this Subpart but current licenses will be renewed.

(d) * * *

(11) This frequency is not available in the 150–170 MHz band until August 18, 1996. This frequency will be assigned with an authorized bandwidth not to exceed 11.25 kHz. In the 450–470 MHz band, secondary telemetry operations pursuant to § 90.238(e) will be authorized on this frequency.

* * * * *

(16) This frequency is not available until August 18, 1996. After August 18, 1996 this frequency will be assigned with an authorized bandwidth not to exceed 6 kHz.

(17) Assignment of frequencies in this band are subject to the provisions of § 90.173.

(18) This frequency is available for systems first licensed prior to August 18, 1995. No new systems will be authorized after August 18, 1995, but prior authorized systems may be modified, expanded, and renewed.

* * * * *

(f) * * *

(3) Frequencies in the 25–50 MHz, 150–170 MHz, 450–512 MHz and 902–928 MHz bands may be assigned for the operation of Location and Monitoring Service (LMS) systems in accordance with the provisions of subpart M of this part, notwithstanding this limitation.

18. Section 90.89 is amended by revising the table of frequencies in paragraph (b), revising limitation (21), and adding limitations (24), (25), and (26) in paragraph (c), and revising paragraph (e)(2) to read as follows:

§ 90.89 Motor Carrier Radio Service.

* * * * *

(b) * * *

MOTOR CARRIER RADIO SERVICE FREQUENCY TABLE

Frequency or band	Class of station(s)	Limitations
Megahertz:		
30.66	Base or mobile	1, 2
30.74	.....do	1, 2
30.82	.....do	1, 2
30.86	.....do	1, 3
30.90	.....do	1, 3
30.94	.....do	1, 3
30.98	.....do	1, 3
31.02	.....do	1, 3
31.06	.....do	1, 3
31.08	.....do	1

MOTOR CARRIER RADIO SERVICE FREQUENCY TABLE—Continued

Frequency or band	Class of station(s)	Limitations
31.10	do	1, 3
31.12	do	1
31.14	do	1, 3
43.70	do	4
43.72	do	4, 23
43.74	do	4, 23
43.76	do	4
43.78	do	4
43.80	do	4
43.82	do	4, 23
43.84	do	4, 23
43.86	do	5, 6
43.88	do	5, 6
43.90	do	5, 6
43.92	do	5, 6, 23
43.94	do	5, 6
43.96	do	5, 23
43.98	do	5
44.00	do	5
44.02	do	5
44.04	do	5
44.06	do	5
44.08	do	5
44.10	do	5, 19
44.12	do	5, 23
44.14	do	5
44.16	do	5, 23
44.18	do	5, 23
44.20	do	5, 20, 23
44.22	do	5
44.24	do	5
44.26	do	5
44.28	do	5
44.30	do	5
44.32	do	5, 23
44.34	do	5
44.36	do	5, 6, 23
44.38	do	5, 6
44.40	do	5, 6, 23
44.42	do	5, 6
44.44	do	5, 6
44.46	do	1, 23
44.48	do	1, 23
44.50	do	1
44.52	do	1
44.54	do	1
44.56	do	1
44.58	do	1
44.60	do	1
72.0–76.0	Operational fixed	7
150 to 170	Base or mobile	24
159.495	do	8
159.5025	do	8, 21
159.510	do	8
159.5175	do	8, 21
159.525	do	8
159.5325	do	8, 21
159.540	do	8
159.5475	do	8, 21
159.555	do	8
159.5625	do	8, 21
159.570	do	8
159.5775	do	8, 21
159.585	do	8
159.5925	do	8, 21
159.600	do	8
159.6075	do	8, 21
159.615	do	8
159.6225	do	8, 21
159.630	do	8
159.6375	do	8, 21
159.645	do	8

MOTOR CARRIER RADIO SERVICE FREQUENCY TABLE—Continued

Frequency or band	Class of station(s)	Limitations
159.6525	do	8, 21
159.660	do	8
159.6675	do	8, 21
159.675	do	8
159.6825	do	8, 21
159.690	do	8
159.6975	do	8, 21
159.705	do	8
159.7125	do	8, 21
159.720	do	8
159.7275	do	8, 21
159.735	do	8
159.7425	do	8, 21
159.750	do	8
159.7575	do	8, 21
159.765	do	8
159.7725	do	8, 21
159.780	do	8
159.7875	do	8, 21
159.795	do	8
159.8025	do	8, 21
159.810	do	8
159.8175	do	8, 21
159.825	do	8
159.8325	do	8, 21
159.840	do	8
159.8475	do	8, 21
159.855	do	8
159.8625	do	8, 21
159.870	do	8
159.8775	do	8, 21
159.885	do	8
159.8925	do	8, 21
159.900	do	8
159.9075	do	8, 21
159.915	do	8
159.9225	do	8, 21
159.930	do	8
159.9375	do	8, 21
159.945	do	8
159.9525	do	8, 21
159.960	do	8
159.9675	do	8, 21
159.975	do	8
159.9825	do	8, 21
159.990	do	8
159.9975	do	8, 21
160.005	do	8
160.0125	do	8, 21
160.020	do	8
160.0275	do	8, 21
160.035	do	8
160.0425	do	8, 21
160.050	do	8
160.0575	do	8, 21
160.065	do	8
160.0725	do	8, 21
160.080	do	8
160.0875	do	8, 21
160.095	do	8
160.1025	do	8, 21
160.110	do	8
160.1175	do	8, 21
160.125	do	8
160.1325	do	8, 21
160.140	do	8
160.1475	do	8, 21
160.155	do	8
160.1625	do	8, 21
160.170	do	8
160.1775	do	8, 21
160.185	do	8

MOTOR CARRIER RADIO SERVICE FREQUENCY TABLE—Continued

Frequency or band	Class of station(s)	Limitations
160.1925	.....do	8, 21
160.200	.....do	8
160.2075	.....do	8, 21
169–172	Mobile	17
220–222	Base and mobile	22
450–470	Fixed, base, or mobile	9, 24
452.3125	Mobile	25
452.325	Base or mobile	10
452.33125	.....do	10, 26
452.33750	.....do	10, 21
452.34375	.....do	10, 26
452.3625	Mobile	25
452.375	Base or mobile	10
452.38125	.....do	10, 26
452.38750	.....do	10, 21
452.39375	.....do	10, 26
452.4125	Mobile	25
452.425	Base or mobile	10
452.43125	.....do	10, 26
452.43750	.....do	10, 21
452.44375	.....do	10, 26
452.4625	Mobile	25
452.475	Base or mobile	10
452.48125	.....do	10, 26
452.48750	.....do	10, 21
452.49375	.....do	10, 26
452.6125	Mobile	25
452.625	Base or mobile	
452.63125	.....do	26
452.63750	.....do	21
452.64375	.....do	26
452.650	.....do	
452.65625	.....do	26
452.66250	.....do	21
452.66875	.....do	26
452.675	.....do	
452.68125	.....do	26
452.68750	.....do	21
452.69375	.....do	26
452.700	.....do	
452.70625	.....do	26
452.71250	.....do	21
452.71875	.....do	26
452.725	.....do	
452.73125	.....do	26
452.73750	.....do	21
452.74375	.....do	26
452.750	.....do	
452.75625	.....do	26
452.76250	.....do	21
452.76875	.....do	26
452.775	.....do	10
452.78125	.....do	10, 26
452.78750	.....do	10, 21
452.79375	.....do	10, 26
452.800	.....do	
452.80625	.....do	26
452.81250	.....do	21
452.81875	.....do	26
452.825	.....do	10
452.83125	.....do	10, 26
452.83750	.....do	10, 21
452.84375	.....do	10, 26
452.850	.....do	
452.85625	.....do	26
452.86250	.....do	21
452.86875	.....do	26
452.875	.....do	10
452.88125	.....do	10, 26
452.88750	.....do	10, 21
452.89375	.....do	10, 26
457.3125	Mobile	25

MOTOR CARRIER RADIO SERVICE FREQUENCY TABLE—Continued

Frequency or band	Class of station(s)	Limitations
457.325	do	10
457.33125	do	10, 26
457.33750	do	10, 21
457.34375	do	10, 26
457.3625	do	25
457.375	do	10
457.38125	do	10, 26
457.38750	do	10, 21
457.39375	do	10, 26
457.4125	do	25
457.425	do	10
457.43125	do	10, 26
457.43750	do	10, 21
457.44375	do	10, 26
457.4625	do	25
457.475	do	10
457.48125	do	10, 26
457.48750	do	10, 21
457.49375	do	10, 26
457.6125	do	25
457.625	do	
457.63125	do	26
457.63750	do	21
457.64375	do	26
457.650	do	
457.65625	do	26
457.66250	do	21
457.66875	do	26
457.675	do	
457.68125	do	26
457.68750	do	21
457.69375	do	26
457.700	do	
457.70625	do	26
457.71250	do	21
457.71875	do	26
457.725	do	
457.73125	do	26
457.73750	do	21
457.74375	do	26
457.750	do	
457.75625	do	26
457.76250	do	21
457.76875	do	26
457.775	do	10
457.78125	do	10, 26
457.78750	do	10, 21
457.79375	do	10, 26
457.800	do	
457.80625	do	26
457.81250	do	21
457.81875	do	26
457.825	do	10
457.83125	do	10, 26
457.83750	do	10, 21
457.84375	do	10, 26
457.850	do	
457.85625	do	26
457.86250	do	21
457.86875	do	26
457.875	do	10
457.88125	do	10, 26
457.88750	do	10, 21
457.89375	do	10, 26
470 to 512	Base or mobile	11
806 to 821	Mobile	12
851 to 866	Base or mobile	12
896 to 901	Mobile	12
928 and above	Operational fixed	13
929–930	Base only	18
935 to 940	Base or mobile	12
1427 to 1435	Operational fixed, base or mobile	14

MOTOR CARRIER RADIO SERVICE FREQUENCY TABLE—Continued

Frequency or band	Class of station(s)	Limitations
2450 to 2500	Base or mobile	15
8400 to 8500	.....do	16
10,550 to 10,680*	.....do	

*The frequencies in the band 10.55–10.68 GHz are available for Digital Termination Systems and for associated internodal links in the Point-to-Point Microwave Radio Service. No new licenses will be issued under this Subpart but current licenses will be renewed.

(c) * * *

(21) This frequency is not available in the 150–170 MHz band until August 18, 1996. This frequency will be assigned with an authorized bandwidth not to exceed 11.25 kHz. In the 450–470 MHz band, secondary telemetry operations pursuant to § 90.238(e) will be authorized on this frequency.

* * * * *

(24) Licensing for frequencies in this band are subject to the provisions of § 90.173.

(25) This frequency is available for systems first licensed prior to August 18, 1995. No new systems will be authorized after August 18, 1995, but prior authorized systems may be modified, expanded, and renewed.

(26) This frequency is not available until August 18, 1996. After August 18, 1996 this frequency will be assigned with an authorized bandwidth not to exceed 6 kHz.

* * * * *

(e) * * *

(2) Frequencies in the 25–50, 150–170, 450–512, and 902–928 MHz bands may be assigned for the operation of Location and Monitoring Service (LMS) systems in accordance with the provisions of subpart M of this part, notwithstanding this limitation.

19. Section 90.91 is amended by revising the table of frequencies in paragraph (b), revising limitation (18), and adding limitations (22), (23), and (24) in paragraph (c), and revising paragraph (e)(2) to read as follows:

§ 90.91 Railroad Radio Service.

* * * * *

(b) * * *

RAILROAD RADIO SERVICE FREQUENCY TABLE

Frequency or band	Class of station(s)	Limitations
Megahertz:		
72.0 to 76.0	Operational fixed	1
72.44	Mobile	2
72.48	.....do	2
72.52	.....do	2
72.56	.....do	2
72.60	.....do	2
74.61	.....do	21
74.63	.....do	21
74.65	.....do	21
74.67	.....do	21
74.69	.....do	21
74.71	.....do	21
74.73	.....do	21
74.75	.....do	21
74.77	.....do	21
74.79	.....do	21
75.21	.....do	21
75.23	.....do	21
75.25	.....do	21
75.27	.....do	21
75.29	.....do	21
75.31	.....do	21
75.33	.....do	21
75.35	.....do	21
75.37	.....do	21
75.39	.....do	21
75.44	.....do	2
75.48	.....do	2
75.52	.....do	2
75.56	.....do	2
75.60	.....do	2
150 to 170	Base or mobile	23
160.215	.....do	3, 4
160.2225	.....do	3, 4, 18
160.230	.....do	3, 4
160.2375	.....do	3, 4, 18
160.245	.....do	3, 4
160.2525	.....do	3, 4, 18
160.260	.....do	3, 4
160.2675	.....do	3, 4, 18
160.275	.....do	3, 4
160.2825	.....do	3, 4, 18

RAILROAD RADIO SERVICE FREQUENCY TABLE—Continued

Frequency or band	Class of station(s)	Limitations
160.290	do	3, 4
160.2975	do	3, 4, 18
160.305	do	3, 4
160.3125	do	3, 4, 18
160.320	do	3, 4
160.3275	do	3, 4, 18
160.335	do	3, 4
160.3425	do	3, 4, 18
160.350	do	3, 4
160.3575	do	3, 4, 18
160.365	do	3, 4
160.3725	do	3, 4, 18
160.380	do	3, 4
160.3875	do	3, 4, 18
160.395	do	3, 4
160.4025	do	3, 4, 18
160.410	do	3, 4, 5
160.4175	do	3, 4, 5, 18
160.425	do	3, 4, 5
160.4325	do	3, 4, 5, 18
160.440	do	3, 4, 5
160.4475	do	3, 4, 5, 18
160.455	do	3, 4, 5
160.4625	do	3, 4, 5, 18
160.470	do	3, 4, 5
160.4775	do	3, 4, 5, 18
160.485	do	3, 4, 5
160.4925	do	3, 4, 5, 18
160.500	do	3, 4, 5
160.5075	do	3, 4, 5, 18
160.515	do	3, 4, 5
160.5225	do	3, 4, 5, 18
160.530	do	3, 4, 5
160.5375	do	3, 4, 5, 18
160.545	do	3, 4, 5
160.5525	do	3, 4, 5, 18
160.560	do	3, 4, 5
160.5675	do	3, 4, 5, 18
160.575	do	3, 4, 5
160.5825	do	3, 4, 5, 18
160.590	do	3, 4, 5
160.5975	do	3, 4, 5, 18
160.605	do	3, 4, 5
160.6125	do	3, 4, 5, 18
160.620	do	3, 4
160.6275	do	3, 4, 18
160.635	do	3, 4
160.6425	do	3, 4, 18
160.650	do	3, 4
160.6575	do	3, 4, 18
160.665	do	3, 4
160.6725	do	3, 4, 18
160.680	do	3, 4
160.6875	do	3, 4, 18
160.695	do	3, 4
160.7025	do	3, 4, 18
160.710	do	3, 4
160.7175	do	3, 4, 18
160.725	do	3, 4
160.7325	do	3, 4, 18
160.740	do	3, 4
160.7475	do	3, 4, 18
160.755	do	3, 4
160.7625	do	3, 4, 18
160.770	do	3, 4
160.7775	do	3, 4, 18
160.785	do	3, 4
160.7925	do	3, 4, 18
160.800	do	3, 4
160.8075	do	3, 4, 18
160.815	do	3, 4
160.8225	do	3, 4, 18

RAILROAD RADIO SERVICE FREQUENCY TABLE—Continued

Frequency or band	Class of station(s)	Limitations
160.830	do	3, 4
160.8375	do	3, 4, 18
160.845	do	3, 4
160.8525	do	3, 4, 18
160.860	do	3, 4, 6
160.8675	do	3, 4, 6, 18
160.875	do	3, 4, 6
160.8825	do	3, 4, 6, 18
160.890	do	3, 4, 6
160.8975	do	3, 4, 6, 18
160.905	do	3, 4, 6
160.9125	do	3, 4, 6, 18
160.920	do	3, 4, 6
160.9275	do	3, 4, 6, 18
160.935	do	3, 4, 6
160.9425	do	3, 4, 6, 18
160.950	do	3, 4, 6
160.9575	do	3, 4, 6, 18
160.965	do	3, 4, 6
160.9725	do	3, 4, 6, 18
160.980	do	3, 4, 6
160.9875	do	3, 4, 6, 18
160.995	do	3, 4, 6
161.0025	do	3, 4, 6, 18
161.010	do	3, 4, 6
161.0175	do	3, 4, 6, 18
161.025	do	3, 4, 6
161.0325	do	3, 4, 6, 18
161.040	do	3, 4, 6
161.0475	do	3, 4, 6, 18
161.055	do	3, 4, 6
161.0625	do	3, 4, 6, 18
161.070	do	3, 4, 6
161.0775	do	3, 4, 6, 18
161.085	do	3, 4, 6
161.0925	do	3, 4, 6, 18
161.100	do	3, 4, 6
161.1075	do	3, 4, 6, 18
161.115	do	3, 4, 6
161.1225	do	3, 4, 6, 18
161.130	do	3, 4, 6
161.1375	do	3, 4, 6, 18
161.145	do	3, 4, 6
161.1525	do	3, 4, 6, 18
161.160	do	3, 4, 6
161.1675	do	3, 4, 6, 18
161.175	do	3, 4, 6
161.1825	do	3, 4, 6, 18
161.190	do	3, 4, 6
161.1975	do	3, 4, 6, 18
161.205	do	3, 4, 6
161.2125	do	3, 4, 6, 18
161.220	do	3, 4, 6
161.2275	do	3, 4, 6, 18
161.235	do	3, 4, 6
161.2425	do	3, 4, 6, 18
161.250	do	3, 4, 6
161.2575	do	3, 4, 6, 18
161.265	do	3, 4, 6
161.2725	do	3, 4, 6, 18
161.280	do	3, 4, 6
161.2875	do	3, 4, 6, 18
161.295	do	3, 4, 6
161.3025	do	3, 4, 6, 18
161.310	do	3, 4, 6
161.3175	do	3, 4, 6, 18
161.325	do	3, 4, 6
161.3325	do	3, 4, 6, 18
161.340	do	3, 4, 6
161.3475	do	3, 4, 6, 18
161.355	do	3, 4, 6
161.3625	do	3, 4, 6, 18

RAILROAD RADIO SERVICE FREQUENCY TABLE—Continued

Frequency or band	Class of station(s)	Limitations
161.370	.....do	3, 4, 6
161.3775	.....do	3, 4, 6, 18
161.385	.....do	3, 4, 7
161.3925	.....do	3, 4, 7, 18
161.400	.....do	3, 4, 7
161.4075	.....do	3, 4, 7, 18
161.415	.....do	3, 4, 7
161.4225	.....do	3, 4, 7, 18
161.430	.....do	3, 4, 7
161.4375	.....do	3, 4, 7, 18
161.445	.....do	3, 4, 7
161.4525	.....do	3, 4, 7, 18
161.460	.....do	3, 4, 7
161.4675	.....do	3, 4, 7, 18
161.475	.....do	3, 4, 7
161.4825	.....do	3, 4, 7, 18
161.490	.....do	3, 4, 7
161.4975	.....do	3, 4, 7, 18
161.505	.....do	3, 4, 7
161.5125	.....do	3, 4, 7, 18
161.520	.....do	3, 4, 7
161.5275	.....do	3, 4, 7, 18
161.535	.....do	3, 4, 7
161.5425	.....do	3, 4, 7, 18
161.550	.....do	3, 4, 7
161.5575	.....do	3, 4, 7, 18
161.565	.....do	3, 4, 7
169 to 172	Mobile, operational fixed	8
220–222	Base and mobile	20
406 to 413	Operational fixed	8
450 to 470	Fixed, base, or mobile	9, 23
452.3125	Mobile	24
452.325	Base or mobile	10
452.33125	.....do	10, 22
452.33750	.....do	10, 18
452.34375	.....do	10, 22
452.3625	Mobile	24
452.375	Base or mobile	10
452.38125	.....do	10, 22
452.38750	.....do	10, 18
452.39375	.....do	10, 22
452.4125	Mobile	24
452.425	Base or mobile	10
452.43125	.....do	10, 22
452.43750	.....do	10, 18
452.44375	.....do	10, 22
452.4625	Mobile	24
452.475	Base or mobile	10
452.48125	.....do	10, 22
452.48750	.....do	10, 18
452.49375	.....do	10, 22
452.7625	Mobile	24
452.775	Base or mobile	10
452.78125	.....do	10, 22
452.78750	.....do	10, 18
452.79375	.....do	10, 22
452.8125	Mobile	24
452.825	Base or mobile	10
452.83125	.....do	10, 22
452.83750	.....do	10, 18
452.84375	.....do	10, 22
452.8625	Mobile	24
452.875	Base or mobile	10
452.88125	.....do	10, 22
452.88750	.....do	10, 18
452.89375	.....do	10, 22
452.900	.....do	
452.90625	.....do	22
452.91250	.....do	18
452.91875	.....do	22
452.925	.....do	11
452.93125	.....do	11, 22

RAILROAD RADIO SERVICE FREQUENCY TABLE—Continued

Frequency or band	Class of station(s)	Limitations
452.93750	do	11, 18
452.94375	do	11, 22
452.950	do	11
452.95625	do	11, 22
452.96250	do	11, 18
452.96875	do	11, 22
457.3125	Mobile	24
457.325	do	10
457.33125	do	10, 22
457.33750	do	10, 18
457.34375	do	10, 22
457.3625	do	24
457.375	do	10
457.38125	do	10, 22
457.38750	do	10, 18
457.39375	do	10, 22
457.4125	do	24
457.425	do	10
457.43125	do	10, 22
457.43750	do	10, 18
457.44375	do	10, 22
457.4625	do	24
457.475	do	10
457.48125	do	10, 22
457.48750	do	10, 18
457.49375	do	10, 22
457.7625	do	24
457.775	do	10
457.78125	do	10, 22
457.78750	do	10, 18
457.79375	do	10, 22
457.8125	do	24
457.825	do	10
457.83125	do	10, 22
457.83750	do	10, 18
457.84375	do	10, 22
457.8625	do	24
457.875	do	10
457.88125	do	10, 22
457.88750	do	10, 18
457.89375	do	10, 22
457.900	do	
457.90625	do	22
457.91250	do	18
457.91875	do	22
457.925	do	11
457.93125	do	11, 22
457.93750	do	11, 18
457.94375	do	11, 22
457.950	do	11
457.95625	do	11, 22
457.96250	do	11, 18
457.96875	do	11, 22
470 to 512	Base or mobile	12
806 to 821	Mobile	13
851 to 866	Base or mobile	13
896 to 901	Mobile	13
928 and above	Operational fixed	14
929–930	Base only	19
935 to 940	Base or mobile	13
1427 to 1435	Operational fixed, base or mobile	15
2450 to 2500	Base or mobile	16
8400 to 8500	do	17
10,550 to 10,680*	do	

*The frequencies in the band 10.55–10.68 GHz are available for Digital Termination Systems and for associated internodal links in the Point-to-Point Microwave Radio Service. No new licenses will be issued under this Subpart but current licenses will be renewed.

(c) * * *

(18) This frequency is not available in the 150–170 MHz band until August 18, 1996. This frequency will be assigned with an authorized bandwidth not to

exceed 11.25 kHz. In the 450–470 MHz band, secondary telemetry operations pursuant to § 90.238(e) will be authorized on this frequency.

* * * * *

(22) This frequency is not available until August 18, 1996. After August 18, 1996 this frequency will be assigned with an authorized bandwidth not to exceed 6 kHz.

(23) Assignment of frequencies in this band are subject to the provisions of § 90.173

(24) This frequency is available for systems first licensed prior to August 18, 1995. No new systems will be authorized after August 18, 1995, but prior authorized systems may be modified, expanded, and renewed.

* * * * *

(e) * * *

(2) Frequencies in the 25–50 MHz, 150–170 MHz, 450–512 MHz and 902–928 MHz bands may be assigned for the operation of Location and Monitoring Service (LMS) systems in accordance with the provisions of subpart M of this part, notwithstanding this limitation.

20. Section 90.93 is amended by revising the table of frequencies in paragraph (b), revising limitation (15), and adding limitations (17), (18), and (19) in paragraph (c), and revising paragraph (d)(2) to read as follows:

§ 90.93 Taxicab Radio Service.

* * * * *

(b) * * *

TAXICAB RADIO SERVICE FREQUENCY TABLE

Frequency or band	Class of station(s)	Limitations
Megahertz:		
72–76	Operational fixed	14
150 to 170	Base or mobile	18
152.2625	Base or mobile	17
152.270	do	
152.2775	do	15
152.285	do	
152.2925	do	15
152.300	do	1, 2
152.3075	do	1, 2, 15
152.315	do	1, 2
152.3225	do	1, 2, 15
152.330	do	
152.3375	do	15
152.345	do	1, 2
152.3525	do	1, 2, 15
152.360	do	1, 2
152.3675	do	1, 2, 15
152.375	do	1, 2
152.3825	do	1, 2, 15
152.390	do	
152.3975	do	15
152.405	do	1, 2
152.4125	do	1, 2, 15
152.420	do	1, 2
152.4275	do	1, 2, 15
152.435	do	
152.4425	do	15
152.450	do	
152.4575	do	15
152.465	do	11
157.530	Mobile	
157.5375	do	15
157.545	do	
157.5525	do	15
157.560	do	1, 2
157.5675	do	1, 2, 15
157.575	do	1, 2
157.5825	do	1, 2, 15
157.590	do	
157.5975	do	15
157.605	do	1, 2
157.6125	do	1, 2, 15
157.620	do	1, 2
157.6275	do	1, 2, 15
157.635	do	1, 2
157.6425	do	1, 2, 15
157.650	do	
157.6575	do	15
157.665	do	1, 2
157.6725	do	1, 2, 15
157.680	do	1, 2
157.6875	do	1, 2, 15
157.695	do	
157.7025	do	15
157.710	do	
157.7175	do	15

TAXICAB RADIO SERVICE FREQUENCY TABLE—Continued

Frequency or band	Class of station(s)	Limitations
157.725	.....do	11
169–172	.....do	12
220–222	Base and mobile	16
450 to 470	Fixed, base, or mobile	3, 18
452.0375	Mobile	19
452.050	Base or mobile	
452.05625	.....do	17
452.06250	.....do	15
452.06875	.....do	17
452.0875	Mobile	19
452.100	Base or mobile	10
452.10625	.....do	10, 17
452.11250	.....do	10, 15
452.11875	.....do	10, 17
452.1375	Mobile	19
452.150	Base or mobile	
452.15625	.....do	17
452.16250	.....do	15
452.16875	.....do	17
452.1875	Mobile	19
452.200	Base or mobile	10
452.20625	.....do	10, 17
452.21250	.....do	10, 15
452.21875	.....do	10, 17
452.225	.....do	10
452.23125	.....do	10, 17
452.23750	.....do	10, 15
452.24375	.....do	10, 17
452.250	.....do	10
452.25625	.....do	10, 17
452.26250	.....do	10, 15
452.26875	.....do	10, 17
452.275	.....do	10
452.28125	.....do	10, 17
452.28750	.....do	10, 15
452.29375	.....do	10, 17
452.300	.....do	
452.30625	.....do	17
452.31250	.....do	15
452.31875	.....do	17
452.3375	Mobile	19
452.350	Base or mobile	10
452.35625	.....do	10, 17
452.36250	.....do	10, 15
452.36875	.....do	10, 17
452.3875	Mobile	19
452.400	Base or mobile	10
452.40625	.....do	10, 17
452.41250	.....do	10, 15
452.41875	.....do	10, 17
452.4375	Mobile	19
452.450	Base or mobile	10
452.45625	.....do	10, 17
452.46250	.....do	10, 15
452.46875	.....do	10, 17
452.4875	Mobile	19
452.500	Base or mobile	
452.50625	.....do	17
452.51250	.....do	15
452.51875	.....do	17
457.0375	Mobile	19
457.050	.....do	
457.05625	.....do	17
457.06250	.....do	15
457.06875	.....do	17
457.0875	.....do	19
457.100	.....do	10
457.10625	.....do	10, 17
457.11250	.....do	10, 15
457.11875	.....do	10, 17
457.1375	.....do	19
457.150	.....do	

TAXICAB RADIO SERVICE FREQUENCY TABLE—Continued

Frequency or band	Class of station(s)	Limitations
457.15625	do	17
457.16250	do	15
457.16875	do	17
457.1875	do	19
457.200	do	10
457.20625	do	10, 17
457.21250	do	10, 15
457.21875	do	10, 17
457.225	do	10
457.23125	do	10, 17
457.23750	do	10, 15
457.24375	do	10, 17
457.250	do	10
457.25625	do	10, 17
457.26250	do	10, 15
457.26875	do	10, 17
457.275	do	10
457.28125	do	10, 17
457.28750	do	10, 15
457.29375	do	10, 17
457.300	do	
457.30625	do	17
457.31250	do	15
457.31875	do	17
457.3375	do	19
457.350	do	10
457.35625	do	10, 17
457.36250	do	10, 15
457.36875	do	10, 17
457.3875	do	19
457.400	do	10
457.40625	do	10, 17
457.41250	do	10, 15
457.41875	do	10, 17
457.4375	do	19
457.450	do	10
457.45625	do	10, 17
457.46250	do	10, 15
457.46875	do	10, 17
457.4875	do	19
457.500	do	
457.50625	do	17
457.51250	do	15
457.51875	do	17
470–512	Base or mobile	4
806 to 821	Mobile	5
851 to 866	Base or mobile	5
896 to 901	Mobile	5
928 and above	Operational fixed	6
929–930	Base only	13
935 to 940	Base or mobile	5
1427 to 1435	Base, mobile, or operational fixed	7
2450 to 2500	Base or mobile	8
8400 to 8500	do	9
10,550 to 10,680*	do	

*The frequencies in the band 10.55–10.68 GHz are available for Digital Termination Systems and for associated internodal links in the Point-to-Point Microwave Radio Service. No new licenses will be issued under this Subpart but current licenses will be renewed.

(c) * * *

(15) This frequency is not available in the 150–170 MHz band until August 18, 1996. This frequency will be assigned with an authorized bandwidth not to exceed 11.25 kHz. In the 450–470 MHz band, secondary telemetry operations pursuant to § 90.238(e) will be authorized on this frequency.

* * * * *

(17) This frequency is not available until August 18, 1996. After August 18, 1996 this frequency will be assigned with an authorized bandwidth not to exceed 6 kHz.

(18) Assignment of frequencies in this band are subject to the provisions of § 90.173

(19) This frequency is available for systems first licensed prior to August 18, 1995. No new systems will be authorized after August 18, 1995, but prior authorized systems may be modified, expanded, and renewed.

(d) * * *

(2) Frequencies in the 25–50 MHz, 150–170 MHz, 450–512 MHz and 902–928 MHz bands may be assigned for the operation of Location and Monitoring Service (LMS) systems in accordance

with the provisions of subpart M of this part, notwithstanding this limitation.

* * * * *

21. Section 90.95 is amended by revising the table of frequencies in paragraph (c), revising limitations (2), (6), and (18), and adding limitations (20), (21), (22), and (23) in paragraph (d), and revising paragraph (e)(2) to read as follows:

§ 90.95 Automobile Emergency Radio Service.

* * * * *

(c) * * *

AUTOMOBILE EMERGENCY RADIO SERVICE FREQUENCY TABLE

Frequency or band	Class of station(s)	Limitations
Megahertz:		
72–76	Operational fixed	16
150 to 170	Base or mobile	21
150.815	.....do	1, 2, 3
150.830	.....do	1, 2, 3, 22
150.845	.....do	1, 2, 3
150.8525	.....do	1, 2, 3, 18
150.860	.....do	1, 2, 3
150.8675	.....do	1, 2, 3, 18
150.875	.....do	1, 2, 3
150.8825	.....do	1, 2, 3, 18
150.890	.....do	1, 2, 3
150.8975	.....do	1, 2, 3, 18
150.905	.....do	3, 4
150.920	.....do	3, 4, 22
150.935	.....do	3, 4
150.9425	.....do	3, 4, 18
150.950	.....do	3, 4
150.9575	.....do	3, 4, 18
150.965	.....do	3, 4
150.9725	.....do	3, 4, 18
157.470	.....do	5, 6
157.4775	.....do	5, 6, 18
157.485	.....do	5, 6
157.4925	.....do	5, 6, 18
157.500	.....do	5, 6
157.5075	.....do	5, 6, 18
157.515	.....do	5, 6
157.5225	.....do	5, 6, 18
169–172	Mobile	17
220–222	Base and mobile	19
450 to 470	Fixed, base, or mobile	7, 21
452.5125	Mobile	23
452.525	Base or mobile	8
452.53125	.....do	8, 20
452.53750	.....do	8, 18
452.54375	.....do	8, 20
452.550	.....do	8
452.55625	.....do	8, 20
452.56250	.....do	8, 18
452.56875	.....do	8, 20
452.575	.....do	8
452.58125	.....do	8, 20
452.58750	.....do	8, 18
452.59375	.....do	8, 20
452.600	.....do	8
452.60625	.....do	8, 20
452.61250	.....do	8, 18
452.61875	.....do	8, 20
470 to 512	.....do	9
806 to 821	Mobile	10
851 to 866	Base or mobile	10
896 to 901	Mobile	10
928 and above	Operational fixed	11
929–930	Base only	15
935 to 940	Base or mobile	10
1427 to 1435	Operational fixed, base, or mobile	12
2450 to 2500	Base or mobile	13
8400 to 8500	.....do	14
10,550 to 10,680*	.....do	

* The frequencies in the band 10.55–10.68 GHz are available for Digital Termination Systems and for associated internodal links in the Point-to-Point Microwave Radio Service. No new licenses will be issued under this subpart but current licenses will be renewed.

(d) * * *

(2) Only one of the frequencies 150.815, 150.8225, 150.830, 150.8375, 150.845, 150.8525, 150.860, 150.8675, 150.875, 150.8825, 150.890, or 150.8975 MHz may be assigned to the same licensee in a given area.

* * * * *

(6) Only one of the frequencies 157.470, 157.4775, 157.485, 157.4925, 157.500, 157.5075, 157.515, or 157.5225 MHz may be assigned to the same licensee in a given area.

* * * * *

(18) This frequency is not available in the 150–170 MHz band until August 18, 1996. This frequency will be assigned with an authorized bandwidth not to exceed 11.25 kHz. In the 450–470 MHz band, secondary telemetry operations pursuant to § 90.238(e) will be authorized on this frequency.

* * * * *

(20) This frequency is not available until August 18, 1996. After August 18, 1996 this frequency will be assigned with an authorized bandwidth not to exceed 6 kHz.

(21) Assignment of frequencies in this band are subject to the provisions of § 90.173

(22) This frequency will be authorized a channel bandwidth of 25 kHz.

(23) This frequency is available for systems first licensed prior to August 18, 1995. No new systems will be authorized after August 18, 1995, but prior authorized systems may be modified, expanded, and renewed.

(e) * * *

(2) Frequencies in the 25–50 MHz, 150–170 MHz, 450–512 MHz and 902–928 MHz bands may be assigned for the operation of Location and Monitoring Service (LMS) systems in accordance with the provisions of subpart M of this part, notwithstanding this limitation.

* * * * *

22. Section 90.173 is amended by revising paragraph (f) and adding paragraphs (l) and (m) to read as follows:

§ 90.173 Policies governing the assignment of frequencies.

* * * * *

(f) After August 18, 1995, applications for stations in the 150–174 MHz and 421–512 MHz bands for operation on frequencies 15 kHz or less removed from existing stations in the same geographic area will be granted based upon a recommendation from the applicable frequency coordinator.

* * * * *

(l) In the 150–174 MHz band, authorizations for frequencies available prior to August 18, 1995 will be granted with channel bandwidths of 25 kHz or less. After August 18, 1995, authorizations for all other frequencies in this band will be granted with channel bandwidths of 12.5 kHz or less.

(m) In the 421–512 MHz band, authorizations for frequencies available prior to August 18, 1995 will be granted with channel bandwidths of 25 kHz or less. After August 18, 1995, new authorizations for frequencies 12.5 kHz removed from these frequencies will be made for channel bandwidths of 12.5 kHz or less, and authorizations for frequencies 6.25 kHz removed from these frequencies will be granted with channel bandwidths of 6.25 kHz or less.

23. Section 90.175 is amended by revising paragraph (a) to read as follows:

§ 90.175 Frequency coordination requirements.

* * * * *

(a) For frequencies between 25 and 470 MHz: A statement from the applicable frequency coordinator recommending the most appropriate frequency. The coordinator's recommendation may include comments on technical factors such as power, antenna height and gain, terrain and other factors which may serve to minimize potential interference. Until August 18, 1995, for PLMR frequencies between 150 and 470 MHz, the coordinator:

(1) must not recommend any adjacent channel frequency 15 kHz or less removed to existing stations which would result in a separation of less than 16 km (10 mi), or 12 km (7 mi) in the Taxicab Radio Service, unless written concurrence is received from the licensee of such station(s); and

(2) if the frequency recommended is in the 150–170 MHz band, and is 17.5 kHz or less removed from frequency which is available to another radio service, the coordinators statement must show that approval has been received from the coordinator for the other service. Frequencies in the 450–470 MHz band, when used for secondary fixed operations, shall be assigned and coordinated pursuant to § 90.261.

* * * * *

24. Section 90.203 is amended by adding paragraph (j) to read as follows:

§ 90.203 Type acceptance required.

* * * * *

(j) For transmitters operating on frequencies in the 150–174 MHz and 421–512 MHz bands:

(1) Prior to August 1, 1996, type acceptance will be granted for equipment with channel bandwidths up to 25 kHz.

(2) On or after August 1, 1996, type acceptance will only be granted for equipment with the following channel bandwidths:

(i) 12.5 kHz or less for single bandwidth mode equipment or multi-bandwidth mode equipment with a maximum channel bandwidth of 12.5 kHz.

(ii) 25 kHz for multi-bandwidth mode equipment with a maximum channel bandwidth of 25 kHz if it is capable of operating on channels of 12.5 kHz or less.

(iii) 25 kHz if the equipment meets the efficiency standard of paragraph (j)(3) of this section.

(3) On or after August 1, 1996, requests for Part 90 type acceptance of transmitters designed to operate on frequencies in the 150–174 MHz and 421–512 MHz bands must include a certification that the equipment meets a spectrum efficiency standard of one voice channel per 12.5 kHz of channel bandwidth. If the equipment is capable of transmitting data and has an overall bandwidth of 6.25 kHz or more, the equipment must be capable of supporting a minimum data rate of 4800 bits per second per 6.25 kHz of bandwidth.

(4) On or after January 1, 2005, except for hand-held transmitters with an output power of two watts or less, type acceptance will only be granted for equipment with the following channel bandwidths:

(i) 6.25 kHz or less for single bandwidth mode equipment.

(ii) 12.5 kHz for multi-bandwidth mode equipment with a maximum channel bandwidth of 12.5 kHz if it is capable of operating on channels of 6.25 kHz or less.

(iii) 25 kHz for multi-bandwidth mode equipment with a maximum channel bandwidth of 25 kHz if it is capable of operating on channels of 6.25 kHz or less.

(iv) Up to 25 kHz if the equipment meets the efficiency standard of paragraph (j)(5) of this section.

(5) On or after January 1, 2005, requests for Part 90 type acceptance of transmitters designed to operate on frequencies in the 150–174 MHz and 421–512 MHz bands must include a certification that the equipment meets a spectrum efficiency standard of one voice channel per 6.25 kHz of channel bandwidth. If the equipment is capable of transmitting data and has an overall bandwidth of 6.25 kHz or more, the equipment must be capable of supporting a minimum data rate of 4800 bits per second per 6.25 kHz of bandwidth.

(6) The Commission's Equipment Authorization Division will not accept applications for modification or permissive changes of Type Acceptance grants for single bandwidth mode transmitters designed to operate on channel bandwidths wider than 12.5 kHz granted prior to August 1, 1996, except under the following conditions:

(i) Transmitters that have the inherent capability for multi-mode or narrowband operation allowed in paragraphs (j)(2) and (j)(4) of this section, may have their grant of Type Acceptance modified upon demonstrating that the original unit complies with the technical requirements for operation.

(ii) New FCC Identifiers will be needed to identify modified equipment that complies with the requirements of paragraphs (j)(2) and (j)(4) of this section.

(7) Transmitters designed for one-way paging operations will be type accepted with a 25 kHz channel bandwidth.

25. Section 90.205 is revised to read as follows:

§ 90.205 Power and antenna height limits.

Applicants for licenses must request and use no more power than the actual power necessary for satisfactory operation. Except where otherwise specifically provided for, the maximum power that will be authorized to applicants whose license applications for new stations are filed after August 18, 1995 is as follows:

(a) *Below 25 MHz*. For single sideband operations (J3E emission), the maximum transmitter peak envelope power is 1000 watts.

(b) *25–50 MHz*. The maximum transmitter output power is 300 watts.

(c) *72–76 MHz*. The maximum effective radiated power (ERP) for stations operating on fixed frequencies is 300 watts. Stations operating on mobile-only frequencies are limited to one watt transmitter output power.

(d) *150–174 MHz*. (1) The maximum allowable station ERP is dependent upon the station's antenna HAAT and required service area and will be authorized in accordance with Table 1. Applicants requesting an ERP in excess of that listed in Table 1 must submit an engineering analysis based upon generally accepted engineering practices and standards that includes coverage contours to demonstrate that the requested station parameters will not produce coverage in excess of that which the applicant requires.

(2) Applications for stations with ERPs higher than permitted in Table 1 will be submitted to the frequency coordinator accompanied by an technical analysis, based upon generally accepted engineering practices and standards, that demonstrates that the requested station parameters will not produce a signal strength in excess of 37 dBu at any point along the edge of the requested service area. The coordinator may then recommend any ERP appropriate to meet this condition.

(3) An applicant for a station with a service area radius greater than 40 km (25 mi) must justify the requested service area radius, which will be authorized only in accordance with Table 1, note 4. Base stations with a service area radius greater than 80 km (50 mi) will be authorized only on a secondary basis.

TABLE 1—150–174MHz—MAXIMUM ERP/REFERENCE HAAT FOR A SPECIFIC SERVICE AREA RADIUS

	Service area radius (km)									
	3	8	13	16	24	32	40	48 [4]	64 [4]	80 [4]
Maximum ERP (w) [1]	1	28	178	[2] 500	[2] 500	[2] 500	500	[2] 500	[2] 500	[2] 500
Up to reference HAAT (m) [3]	15	15	15	15	33	65	110	160	380	670

[1] Maximum ERP indicated provides for a 37 dBu signal strength at the edge of the service area per FCC Report R–6602, Fig. 19 (See § 73.699, Fig. 10).

[2] Maximum ERP of 500 watts allowed. Signal strength at the service area contour may be less than 37 dBu.

[3] When the actual antenna HAAT is greater than the reference HAAT, the allowable ERP will be reduced in accordance with the following equation: $ERP_{allow} = ERP_{max} \times (HAAT_{ref} / HAAT_{actual})^2$.

[4] Applications for this service area radius may be granted upon specific request with justification and must include a technical demonstration that the signal strength at the edge of the service area does not exceed 37 dBu.

(e) *220–222 MHz*. Limitations on power and antenna heights are specified in § 90.729.

(f) *421–430 MHz*. Limitations on power and antenna heights are specified in § 90.279.

(g) *450–470 MHz*.

(1) The maximum allowable station effective radiated power (ERP) is dependent upon the station's antenna HAAT and required service area and will be authorized in accordance with Table 2. Applicants requesting an ERP in excess of that listed in Table 2 must submit an engineering analysis based upon generally accepted engineering practices and standards that includes coverage contours to demonstrate that the requested station parameters will not produce coverage in excess of that which the applicant requires.

(2) Applications for stations with ERPs higher than permitted in Table 2 will be submitted to the frequency coordinator accompanied by an technical analysis, based upon generally accepted engineering practices and standards, that demonstrates that the requested station parameters will not produce a signal strength in excess of 39 dBu at any point along the edge of the requested service area. The coordinator may then recommend any ERP appropriate to meet this condition.

(3) An applicant for a station with a service area radius greater than 32 km (20 mi) must justify the requested service area radius, which may be authorized only in accordance with Table 2, note 4. Base stations with a service area radius greater than 80 km (50 mi) will be authorized only on a secondary basis.

TABLE 2.—450–470 MHz—MAXIMUM ERP/REFERENCE HAAT FOR A SPECIFIC SERVICE AREA RADIUS

	Service area radius (km)									
	3	8	13	16	24	32	40 [4]	48 [4]	64 [4]	80 [4]
Maximum ERP (w) [1]	2	100	[2] 500	[2] 500	[2] 500	[2] 500	[2] 500	[2] 500	[2] 500	[2] 500

TABLE 2.—450–470 MHZ—MAXIMUM ERP/REFERENCE HAAT FOR A SPECIFIC SERVICE AREA RADIUS—Continued

	Service area radius (km)									
	3	8	13	16	24	32	40 [4]	48 [4]	64 [4]	80 [4]
Up to reference HAAT (m) [3]	15	15	15	27	63	125	250	410	950	2700

[1] Maximum ERP indicated provides for a 39 dBu signal strength at the edge of the service area per FCC Report R–6602, Fig. 29 (See § 73.699, Fig. 10 b).
[2] Maximum ERP of 500 watts allowed. Signal strength at the service area contour may be less than 39 dBu.
[3] When the actual antenna HAAT is greater than the reference HAAT, the allowable ERP will be reduced in accordance with the following equation: $ERP_{allow} = ERP_{max} \times (HAAT_{ref} / HAAT_{actual})^2$.
[4] Applications for this service area radius may be granted upon specific request with justification and must include a technical demonstration that the signal strength at the edge of the service area does not exceed 39 dBu.

(h) *470–512 MHz.* Power and height limitations are specified in §§ 90.307 and 90.309.

(i) *806–824/851–869 MHz and 896–901/935–940 MHz.* Power and height limitations are specified in § 90.635.

(j) *902–928 MHz.* LMS systems operating pursuant to subpart M of this part in the 902–927.25 MHz band will be authorized a maximum of 30 watts ERP. LMS equipment operating in the 927.25–928 MHz band will be authorized a maximum of 300 watts ERP. ERP must be measured as peak envelope power. Antenna heights will be as specified in § 90.353(h).

(k) *929–930 MHz.* Limitations on power and antenna heights are specified in § 90.494.

(l) *2450–2483.5 MHz.* The maximum transmitter power is 5 watts.

(m) *All other frequency bands.* Requested transmitter power will be considered and authorized on a case by case basis.

26. Section 90.207 is amended by revising the introductory text, redesignating existing paragraphs (a) through (l) as (b) through (m) respectively, and adding a new paragraph (a) and (n) to read as follows:

§ 90.207 Types of emissions.

Unless specified elsewhere in this part, stations will be authorized emissions as provided for in paragraphs (b) through (n) of this section.

(a) *Explanation of emission symbols.* For a complete listing of emission symbols see § 2.201 of this chapter.

(1) The first symbol indicates the type of modulation on the transmitter carrier.

A—Amplitude modulation, double sideband with identical information on each sideband.

F—Frequency modulation.

G—Phase modulation.

J—Single sideband with suppressed carrier.

P—Unmodulated pulse.

(2) The second symbol indicates the type of signal modulating the transmitter carrier.

0—No modulation.

1—Digital modulation, no subcarrier.

2—Digital modulation, modulated subcarrier.

3—Analog modulation.

(3) The third symbol indicates the type of transmitted information.

A—Telegraphy for aural reception.

B—Telegraphy for machine reception.

C—Facsimile.

D—Data, telemetry, and telecommand.

E—Voice.

N—No transmitted information.

* * * * *

(n) *Other emissions.* Requests for emissions other than those listed in paragraphs (c) through (e) of this section will be considered on a case-by-case basis to ensure that the requested emission will not cause more interference than other currently permitted emissions.

27. Section 90.209 is revised to read as follows:

§ 90.209 Bandwidth limitations.

(a) Each authorization issued to a station licensed under this part will show an emission designator representing the class of emission authorized. The designator will be prefixed by a specified necessary bandwidth. This number does not necessarily indicate the bandwidth occupied by the emission at any instant. In those cases where § 2.202 of this chapter does not provide a formula for the computation of necessary bandwidth, the occupied bandwidth, as defined in Part 2 of this chapter, may be used in lieu of the necessary bandwidth.

(b) The maximum authorized single channel bandwidth of emission corresponding to the type of emission specified in § 90.207 is as follows:

(1) For A1A or A1B emissions, the maximum authorized bandwidth is 0.25 kHz. The maximum authorized bandwidth for type A3E emission is 8 kHz.

(2) For operations below 25 MHz utilizing J3E emission, the bandwidth occupied by the emission shall not exceed 3000 Hz. The assigned frequency will be specified in the authorization. The authorized carrier frequency will be 1400 Hz lower in frequency than the assigned frequency. Only upper sideband emission may be used. In the case of regularly available double sideband radiotelephone channels, an assigned frequency for J3E emissions is available either 1600 Hz below or 1400 Hz above the double sideband radiotelephone assigned frequency.

(3) For all other types of emissions, the maximum authorized bandwidth shall not be more than that normally authorized for voice operations.

(4) Where a frequency is assigned exclusively to a single licensee, more than a single emission may be used within the authorized bandwidth. In such cases, the frequency stability requirements of § 90.213 must be met for each emission.

(5) Unless specified elsewhere, channel spacings and bandwidths that will be authorized in the following frequency bands are given in the following Table.

STANDARD CHANNEL SPACING/BANDWIDTH

Frequency band (MHz)	Channel spacing (kHz)	Authorized bandwidth (kHz)
Below 25 [2]		
25–50	20	20
72–76	20	20
150–174	[1] 7.5	[1] [3] 20/11.25/6
220–222	5	4
421–512 [2]	[1] 6.25	[1] [3] 20/11.25/6
806–821/851–866	25	20
821–824/866–869	12.5	20
896–901/935–940	12.5	13.6
902–928 [4]		
929–930	25	20
1427–1435 [2]		
2450–2483.52 [2]		
Above 2500 [2]		

[1] For stations authorized on or after August 18, 1995.

[2] Bandwidths for radiolocation stations in the 420–450 MHz band and for stations operating in bands subject to this footnote will be reviewed and authorized on a case-by-case basis.

[3] Operations using equipment designed to operate with a 25 kHz channel bandwidth will be authorized a 20 kHz bandwidth. Operations using equipment designed to operate with a 12.5 kHz channel bandwidth will be authorized a 11.25 kHz bandwidth. Operations using equipment designed to operate with a 6.25 kHz channel bandwidth will be authorized a 6 kHz bandwidth.

[4] The maximum authorized bandwidth shall be 12 MHz for non-multilateration LMS operations in the band 909.75–921.75 MHz and 2 MHz in the band 902.00–904.00 MHz. The maximum authorized bandwidth for multilateration LMS operations shall be 5.75 MHz in the 904.00–909.75 MHz band; 2 MHz in the 919.75–921.75 MHz band; 5.75 MHz in the 921.75–927.25 MHz band and its associated 927.25–927.50 MHz narrowband forward link; and 8.00 MHz if the 919.75–921.75 MHz and 921.75–927.25 MHz bands and their associated 927.25–927.50 MHz and 927.50–927.75 MHz narrowband forward links are aggregated.

28. Section 90.210 is added to read as follows:

§ 90.210 Emission masks.

Except as indicated elsewhere in this part, transmitters used in the radio services governed by this part must comply with the emission masks outlined in this section. Unless otherwise stated, per paragraphs (d)(4), (e)(4), and (l) of this section, measurements of emission power can be expressed in either peak or average values provided that emission powers are expressed with the same parameters used to specify the unmodulated transmitter carrier power. For transmitters that do not produce a full power unmodulated carrier, reference to the unmodulated transmitter carrier power refers to the total power contained in the channel bandwidth. Unless indicated elsewhere in this part, the Table in this section specifies the emission masks for equipment operating in the frequency bands governed under this part.

APPLICABLE EMISSION MASKS

Frequency band (MHz)	Mask for equipment with audio low pass filter	Mask for equipment without audio low pass filter
Below 25 [1]	A or B	A or C
25–50	B	C
72–76	B	C
150–174 [2]	B, D, or E	C, D, or E
150 Paging-only.	B	C
220–222	F	F
421–512 [2]	B, D, or E	C, D, or E
450 Paging-only.	B	G
806–821/851–866.	B	G
821–824/866–869.	B	H
896–901/935–940.	I	J
902–928	K	K
929–930	B	G
Above 940	B	C
All other bands.	B	C

[1] Equipment using single sideband J3E emission must meet the requirements of Emission Mask A. Equipment using other emissions must meet the requirements of Emission Mask B or C, as applicable.

[2] Equipment designed to operate with a 25 kHz channel bandwidth must meet the requirements of Emission Mask B or C, as applicable. Equipment designed to operate with a 12.5 kHz channel bandwidth must meet the requirements of Emission Mask D, and equipment designed to operate with a 6.25 kHz channel bandwidth must meet the requirements of Emission Mask E.

(a) *Emission Mask A.* For transmitters utilizing J3E emission, the carrier must be at least 40 dB below the peak envelope power and the power of emissions must be reduced below the output power (P in watts) of the transmitter as follows:

(1) On any frequency removed from the assigned frequency by more than 50 percent, but not more than 150 percent of the authorized bandwidth: At least 25 dB.

(2) On any frequency removed from the assigned frequency by more than 150 percent, but not more than 250 percent of the authorized bandwidth: At least 35 dB.

(3) On any frequency removed from the assigned frequency by more than 250 percent of the authorized bandwidth: At least 43 + 10 log P dB.

(b) *Emission Mask B.* For transmitters that are equipped with an audio low-pass filter pursuant to § 90.211(a), the power of any emission must be below the unmodulated carrier power (P) as follows:

(1) On any frequency removed from the assigned frequency by more than 50 percent, but not more than 100 percent of the authorized bandwidth: At least 25 dB.

(2) On any frequency removed from the assigned frequency by more than 100 percent, but not more than 250 percent of the authorized bandwidth: At least 35 dB.

(3) On any frequency removed from the assigned frequency by more than 250 percent of the authorized bandwidth: At least 43 + 10 log (P) dB.

(c) *Emission Mask C.* For transmitters that are not equipped with an audio low-pass filter pursuant to § 90.211(b), the power of any emission must be attenuated below the unmodulated carrier output power (P) as follows:

(1) On any frequency removed from the center of the authorized bandwidth by a displacement frequency (f_d in kHz) of more than 5 kHz, but not more than 10 kHz: At least 83 log (f_d/5) dB;

(2) On any frequency removed from the center of the authorized bandwidth by a displacement frequency (f_d in kHz) of more than 10 kHz, but not more than 250 percent of the authorized bandwidth: At least 29 log (f_d^2/11) dB or 50 dB, whichever is the lesser attenuation;

(3) On any frequency removed from the center of the authorized bandwidth by more than 250 percent of the authorized bandwidth: At least 43 + 10 log (P) dB.

(d) *Emission Mask D—12.5 kHz channel bandwidth equipment.* For transmitters designed to operate with a 12.5 kHz channel bandwidth, any emission must be attenuated below the power (P) of the highest emission contained within the authorized bandwidth as follows:

(1) On any frequency from the center of the authorized bandwidth f_0 to 5.625 kHz removed from f_0: Zero dB.

(2) On any frequency removed from the center of the authorized bandwidth by a displacement frequency (f_d in kHz) of more than 5.625 kHz but no more than 12.5 kHz: At least 7.27(f_d − 2.88 kHz) dB.

(3) On any frequency removed from the center of the authorized bandwidth by a displacement frequency (f_d in kHz) of more than 12.5 kHz: At least 50 + 10 log (P) dB or 70 dB, whichever is the lesser attenuation.

(4) The reference level for showing compliance with the emission mask shall be established using a resolution bandwidth sufficiently wide (usually two to three times the channel bandwidth) to capture the true peak emission of the equipment under test. In order to show compliance with the emissions mask up to and including 50 kHz removed from the edge of the authorized bandwidth, adjust the resolution bandwidth to 100 Hz with the measuring instrument in a peak hold mode. A sufficient number of sweeps must be measured to insure that the emission profile is developed. If video filtering is used, its bandwidth must not be less than the instrument resolution

bandwidth. For emissions beyond 50 kHz from the edge of the authorized bandwidth see paragraph (l) of this section. If it can be shown that use of the above instrumentation settings do not accurately represent the true interference potential of the equipment under test, then an alternate procedure may be used provided prior Commission approval is obtained.

(e) *Emission Mask E—6.25 kHz or less channel bandwidth equipment.* For transmitters designed to operate with a 6.25 kHz or less bandwidth, any emission must be attenuated below the power (P) of the highest emission contained within the authorized bandwidth as follows:

(1) On any frequency from the center of the authorized bandwidth f_0 to 3.0 kHz removed from f_0: Zero dB.

(2) On any frequency removed from the center of the authorized bandwidth by a displacement frequency (f_d in kHz) of more than 3.0 kHz but no more than 4.6 kHz: At least 30 + 16.67(f_d − 3 kHz) or 55 + 10 log (P) or 65 dB, whichever is the lesser attenuation.

(3) On any frequency removed from the center of the authorized bandwidth by more than 4.6 kHz: At least 55 + 10 log (P) or 65 dB, whichever is the lesser attenuation.

(4) The reference level for showing compliance with the emission mask shall be established using a resolution bandwidth sufficiently wide (usually two to three times the channel bandwidth) to capture the true peak emission of the equipment under test. In order to show compliance with the emissions mask up to and including 50 kHz removed from the edge of the authorized bandwidth, adjust the resolution bandwidth to 100 Hz with the measuring instrument in a peak hold mode. A sufficient number of sweeps must be measured to insure that the emission profile is developed. If video filtering is used, its bandwidth must not be less than the instrument resolution bandwidth. For emissions beyond 50 kHz from the edge of the authorized bandwidth see paragraph (l) of this section. If it can be shown that use of the above instrumentation settings do not accurately represent the true interference potential of the equipment under test, then an alternate procedure may be used provided prior Commission approval is obtained.

(f) *Emission Mask F.* For transmitters operating in the 220–222 MHz frequency band, any emission must be attenuated below the power (P) of the highest emission contained within the authorized bandwidth as follows:

(1) On any frequency from the center of the authorized bandwidth f_o to the edge of the authorized bandwidth f_e: Zero dB.

(2) On any frequency removed from the center of the authorized bandwidth by a displacement frequency (f_d in kHz) of more than 2 kHz up to and including 3.75 kHz: 30 + 20(f_d -2) dB or 55 + 10 log (P), or 65 dB, whichever is the lesser attenuation.

(3) On any frequency beyond 3.75 kHz removed from the center of the authorized bandwidth f_d: At least 55 + 10 log (P) dB.

(g) *Emission Mask G.* For transmitters that are not equipped with an audio low-pass filter pursuant to § 90.211(b), the power of any emission must be attenuated below the unmodulated carrier power (P) as follows:

(1) On any frequency removed from the center of the authorized bandwidth by a displacement frequency (f_d in kHz) of more than 5 kHz, but no more than 10 kHz: At least 83 log (f_d/5) dB;

(2) On any frequency removed from the center of the authorized bandwidth by a displacement frequency (f_d in kHz) of more than 10 kHz, but no more than 250 percent of the authorized bandwidth: At least 116 log (f_d/6.1) dB, or 50 + 10 log (P) dB, or 70 dB, whichever is the lesser attenuation;

(3) On any frequency removed from the center of the authorized bandwidth by more than 250 percent of the authorized bandwidth: At least 43 + 10 log (P) dB.

(h) *Emission Mask H.* For transmitters that are not equipped with an audio low-pass filter pursuant to § 90.211(b), the power of any emission must be attenuated below the unmodulated carrier power (P) as follows:

(1) On any frequency removed from the center of the authorized bandwidth by a displacement frequency (f_d in kHz) of 4 kHz or less: Zero dB.

(2) On any frequency removed from the center of the authorized bandwidth by a displacement frequency (f_d in kHz) of more than 4 kHz, but no more than 8.5 kHz: At least 107 log (f_d/4) dB;

(3) On any frequency removed from the center of the authorized bandwidth by a displacement frequency (f_d in kHz) of more than 8.5 kHz, but no more than 15 kHz: At least 40.5 log (f_d/1.16) dB;

(4) On any frequency removed from the center of the authorized bandwidth by a displacement frequency (f_d in kHz) of more than 15 kHz, but no more than 25 kHz: At least 116 log (f_d/6.1) dB;

(5) On any frequency removed from the center of the authorized bandwidth by more than 25 kHz: At least 43 + log (P) dB.

(i) *Emission Mask I.* For transmitters that are equipped with an audio low pass filter pursuant to § 90.211(a), the power of any emission must be attenuated below the unmodulated carrier power of the transmitter (P) as follows:

(1) On any frequency removed from the center of the authorized bandwidth by a displacement frequency of more than 6.8 kHz, but no more than 9.0 kHz: At least 25 dB;

(2) On any frequency removed from the center of the authorized bandwidth by a displacement frequency of more than 9.0 kHz, but no more than 15 kHz: At least 35 dB;

(3) On any frequency removed from the center of the authorized bandwidth by a displacement frequency of more than 15 kHz: At least 43 + 10 log (P) dB, or 70 dB, whichever is the lesser attenuation.

(j) *Emission Mask J.* For transmitters that are not equipped with an audio low-pass filter pursuant to § 90.211(b), the power of any emission must be attenuated below the unmodulated carrier power of the transmitter (P) as follows:

(1) On any frequency removed from the center of the authorized bandwidth by a displacement frequency (f_d in kHz) of more than 2.5 kHz, but no more than 6.25 kHz: At least 53 log (f_d/2.5) dB;

(2) On any frequency removed from the center of the authorized bandwidth by a displacement frequency (f_d in kHz) of more than 6.25 kHz, but no more than 9.5 kHz: At least 103 log (f_d/3.9) dB;

(3) On any frequency removed from the center of the authorized bandwidth by a displacement frequency (f_d in kHz) of more than 9.5 kHz: At least 157 log (f_d/5.3) dB, or 50 + 10 log (P) dB or 70 dB, whichever is the lesser attenuation.

(k) *Emission Mask K.* For transmitters authorized under Subpart M that operate in the 902–928 MHz band, the peak power of any emission shall be attenuated below the power of the highest emission contained within the licensee's LMS sub-band in accordance with the following schedule:

(1) On any frequency within the authorized bandwidth: Zero dB.

(2) On any frequency outside the licensee's LMS sub-band edges (as identified in paragraph (k)(5) of this section): 55 + 10 log(P) dB, where (P) is the highest emission (watts) of the transmitter inside the licensee's LMS sub-band.

(3) The resolution bandwidth of the instrumentation used to measure the emission power shall be 100 kHz. If a video filter is used, its bandwidth shall not be less than the resolution bandwidth.

(4) Emission power (P) shall be measured in peak values.

(5) The LMS sub-band edges for multilateration systems for which emissions must be attenuated are 904.00, 909.75, 919.75, 921.75, 927.50, 927.75 and 928.00 MHz. If the 919.75–921.75 and 921.75–927.25 MHz sub-bands are aggregated by a single licensee, the emission mask limitations at the band edges at 921.75 and 927.50 MHz may be ignored. The LMS sub-band edges for non-multilateration systems for which emissions must be attenuated are 902.00, 904.00, 909.75 and 921.75 MHz.

(l) *Other frequency bands.* Transmitters designed for operation under this part on frequencies other than listed in this section must meet the emission mask requirements of Emission Mask B. Equipment operating under this part on frequencies allocated to but shared with the Federal Government, must meet the applicable Federal Government technical standards.

(m) *Instrumentation.* The reference level for showing compliance with the emission mask shall be established, except as indicated in Sections 90.210 (d), (e), and (k), using standard engineering practices for the modulation characteristic used by the equipment under test. For measuring emissions up to and including 50 kHz from the edge of the authorized bandwidth, adjust the resolution bandwidth to 100 Hz with the measuring instrument in a peak hold mode. A sufficient number of sweeps must be measured to insure that the emission profile is developed. If video filtering is used, its bandwidth must not be less than the instrument resolution bandwidth. For frequencies more than 50 kHz removed from the edge of the authorized bandwidth a resolution of at least 10 kHz must be used for frequencies below 1000 MHz. Above 1000 MHz the resolution bandwidth of the instrumentation must be at least 1 MHz. If it can be shown that use of the above instrumentation settings do not accurately represent the true interference potential of the equipment under test, then an alternate procedure may be used provided prior Commission approval is obtained.

29. Section 90.211 is revised to read as follows:

§ 90.211 Modulation requirements.

Each transmitter must meet the requirements of either paragraph (a) or (b) of this section. The requirements of this paragraph do not apply to mobile stations that are authorized to operate with a maximum power output of 2 watts or less.

(a) Transmitters utilizing analog emissions that are equipped with an audio low-pass filter and must meet the emission limitations specified in § 90.210 under all possible conditions of operation.

(b) Transmitters utilizing digital or analog emissions without an audio low-pass filter must be tested for type acceptance using the digital or analog modulating signal or signals specified by the Part 2 of this chapter. The type acceptance application must contain such information as may be necessary to demonstrate that the transmitter complies with the emission limitations specified in § 90.210.

30. Section 90.213 is revised to read as follows:

§ 90.213 Frequency stability.

(a) Unless noted elsewhere, transmitters used in the services governed by this part must have a minimum frequency stability as specified in the following Table.

MINIMUM FREQUENCY STABILITY

[Parts per million (ppm)]

Frequency range (MHz)	Fixed and base stations	Mobile stations	
		Over 2 watts output power	2 watts or less output power
Below 25	[1 2 3] 100	100	200
25–50	20	20	50
72–76	5	.....	50
150–174	[5 11] 5	[6] 5	[4 6] 5
220–222	0.1	1.5	1.5
421–512	[7 11] 5	[8] 5	[8] 5
806–821	1.5	2.5	2.5
821–824	1.0	1.5	1.5
851–866	1.5	2.5	2.5
866–869	1.0	1.5	1.5
896–901	0.1	1.5	1.5
902–928	2.5	2.5	2.5
929–930	1.5	.....	.....
935–940	0.1	1.5	1.5
1427–1435	[9] 300	300	300
Above 2450 [10]	.....	.....	.....

[1] Fixed and base stations with over 200 watts transmitter power must have a frequency stability of 50 ppm except for equipment used in the Public Safety Radio Services where the frequency stability is 100 ppm.

[2] For single sideband operations below 25 MHz, the carrier frequency must be maintained within 50 Hz of the authorized carrier frequency.

[3] Travelers information station transmitters operating from 530–1700 kHz and transmitters exceeding 200 watts peak envelope power used for disaster communications and long distance circuit operations pursuant to §§ 90.242 and 90.264 must maintain the carrier frequency to within 20 Hz of the authorized frequency.

[4] Stations operating in the 154.45 to 154.49 MHz or the 173.2 to 173.4 MHz bands must have a frequency stability of 5 ppm.

[5] In the 150–174 MHz band, fixed and base stations with a 12.5 kHz channel bandwidth must have a frequency stability of 2.5 ppm. Fixed and base stations with a 6.25 kHz channel bandwidth must have a frequency stability of 1.0 ppm.

[6] In the 150–174 MHz band, mobile stations designed to operate with a 12.5 kHz channel bandwidth or designed to operate on a frequency specifically designated for itinerant use or designed for low-power operation of two watts or less, must have a frequency stability of 5 ppm. Mobile stations designed to operate with a 6.25 kHz channel bandwidth must have a frequency stability of 1.0 ppm.

[7] In the 421–512 MHz band, fixed and base stations with a 12.5 kHz channel bandwidth must have a frequency stability of 1.5 ppm. Fixed and base stations with a 6.25 kHz channel bandwidth must have a frequency stability of 0.1 ppm.

[8] In the 421–512 MHz band, mobile stations designed to operate with a 12.5 kHz channel bandwidth or designed to operate on a frequency specifically designated for itinerant use or designed for low-power operation of two watts or less, must have a frequency stability of 2.5 ppm. Mobile stations designed to operate with a 6.25 kHz channel bandwidth must have a frequency stability of 0.5 ppm.

[9] Fixed stations with output powers above 120 watts and necessary bandwidth less than 3 kHz must operate with a frequency stability of 100 ppm. Fixed stations with output powers less than 120 watts and using time-division multiplex, must operate with a frequency stability of 500 ppm.

[10] Frequency stability to be specified in the station authorization.

[11] Paging transmitters operating on paging-only frequencies must operate with frequency stability of 5 ppm in the 150–174 MHz band and 2.5 ppm in the 421–512 MHz band.

(b) For the purpose of determining the frequency stability limits, the power of a transmitter is considered to be the maximum rated output power as specified by the manufacturer.

31. Section 90.214 is added to read as follows:

§ 90.214 Transient Frequency Behavior.

In the 150–174 MHz and 421–512 MHz frequency bands, transient frequencies must be within the maximum frequency difference limits during the time intervals indicated:

TRANSIENT FREQUENCY BEHAVIOR FOR EQUIPMENT DESIGNED TO OPERATE ON 25 kHz CHANNELS

Time intervals [1, 2]	Maximum frequency difference [3] (kHz)	Frequency ranges (MHz)					
		Base stations and portable radios			Mobile radios		
		150 to 174 (ms)	450 to 500 (ms)	500 to 512 (ms)	150 to 174 (ms)	450 to 500 (ms)	500 to 512 (ms)
t_1 [4]	±25.0	5.0	10.0	20.0	5.0	10.0	5.0
t_2	±12.5	20.0	25.0	50.0	20.0	25.0	20.0
t_3 [4]	±25.0	5.0	10.0	10.0	5.0	10.0	5.0

TRANSIENT FREQUENCY BEHAVIOR FOR EQUIPMENT DESIGNED TO OPERATE ON 12.5 kHz CHANNELS

Time intervals [1, 2]	Maximum frequency difference [3] (kHz)	Frequency ranges (MHz) All equipment		
		150 to 174 (ms)	450 to 500 (ms)	500 to 512 (ms)
t_1 [4]	±12.5	5.0	10.0	20.0
t_2	±6.25	20.0	25.0	50.0
t_3 [4]	±12.5	5.0	10.0	10.0

TRANSIENT FREQUENCY BEHAVIOR FOR FQUIPMENT DESIGNED TO OPERATE ON 6.25 kHz CHANNELS

Time intervals [1, 2]	Maximum frequency difference [3] (kHz)	Frequency ranges (MHz) All equipment		
		150 to 174 (ms)	450 to 500 (ms)	500 to 512 (ms)
t_1 [4]	±6.25	5.0	10.0	20.0
t_2	±3.125	20.0	25.0	50.0
t_3 [4]	±6.25	5.0	10.0	10.0

[1] t_{on} is the instant when a 1 kHz test signal is completely suppressed, including any capture time due to phasing.
t_1 is the time period immediately following t_{on}.
t_2 is the time period immediately following t_1.
t_3 is the time period from the instant when the transmitter is turned off until t_{off}.
t_{off} is the instant when the 1 kHz test signal starts to rise.

[2] During the time from the end of t_2 to the beginning of t_3, the frequency difference must not exceed the limits specified in § 90.213.

[3] Difference between the actual transmitter frequency and the assigned transmitter frequency.

[4] If the transmitter carrier output power rating is 6 watts or less, the frequency difference during this time period may exceed the maximum frequency difference for this time period.

32. Section 90.217 is revised to read as follows:

§ 90.217 Exemption from technical standards.

Except as noted herein, transmitters used at stations licensed in the Business Radio Service which have an output power not exceeding 120 milliwatts are exempt from the technical requirements set out in this subpart, but must instead comply with the following:

(a) For equipment designed to operate with a 20 kHz channel bandwidth, the sum of the bandwidth occupied by the emitted signal plus the bandwidth required for frequency stability shall be adjusted so that any emission appearing on a frequency 40 kHz or more removed from the assigned frequency is attenuated at least 30 dB below the unmodulated carrier.

(b) For equipment designed to operate with a 12.5 kHz channel bandwidth, the sum of the bandwidth occupied by the emitted signal plus the bandwidth required for frequency stability shall be adjusted so that any emission appearing on a frequency 25 kHz or more removed from the assigned frequency is

attenuated at least 30 dB below the unmodulated carrier.

(c) For equipment designed to operate with a 6.25 kHz channel bandwidth, the sum of the bandwidth occupied by the emitted signal plus the bandwidth required for frequency stability shall be adjusted so that any emission appearing on a frequency 12.5 kHz or more removed from the assigned frequency is attenuated at least 30 dB below the unmodulated carrier.

(d) Transmitters may be operated in the continuous carrier transmit mode.

33. Section 90.238 is amended by revising paragraph (e) to read as follows:

§ 90.238 Telemetry operations.

* * * * *

(e) In the 450–470 MHz band, telemetry operations will be authorized on a secondary basis with a transmitter output power not to exceed 2 watts on frequencies subject to the limitations in the following sections:

90.17 (c)(24)
90.19 (c)(26)
90.21 (c)(16)
90.23 (c)(18)
90.25 (c)(22)
90.27 (c)(2)
90.53 (b)(30)
90.63 (d)(24)
90.65 (c)(41)
90.67 (c)(36)
90.69 (c)(12)
90.71 (c)(12)
90.73 (d)(35)
90.75 (c)(24)
90.79 (d)(23)
90.81 (d)(11)
90.89 (c)(21)
90.91 (c)(18)
90.93 (c)(15)
90.95 (d)(18)

* * * * *

34. Section 90.243 is amended by revising paragraph (b)(2) to read as follows:

§ 90.243 Mobile relay stations.

* * * * *

(b) * * *

(2) In the Business Radio Service, mobile relay stations may be authorized on frequencies below 450 MHz when those frequencies are reserved for low-power operation of 2 watts or less. Such stations will be authorized a maximum output power not to exceed one watt and the mobile relay antenna system may not be more than 13 m (40 ft) above the ground.

* * * * *

35. Section 90.257 is amended by revising the paragraph (b) introductory text to read as follows:

§ 90.257 Assignment and use of frequencies in the band 72–76 MHz.

* * * * *

(b) The following criteria governs the authorization and use of frequencies in the 72–76 MHz band by mobile stations in the Special Industrial, Manufacturers, Forest Products, Railroad, Power, Petroleum, and Business Radio Services.

* * * * *

36. Section 90.261 is amended by revising paragraph (f) to read as follows:

§ 90.261 Assignment and use of the frequencies in the band 450–470 MHz for fixed operations.

* * * * *

(f) Secondary fixed operations pursuant to paragraph (a) of this section will not be authorized on the following frequencies:

Frequencies (MHz)

451.800/456.800
451.80625/456.80625
451.8125/456.8125
451.81875/456.81875

452.525
452.53125
452.5375
452.54375
452.550
452.55625
452.5625
452.56875
452.575
452.58125
452.5875
452.59375
452.600
452.60625
452.6125
452.61875

452.925/457.925
452.93125/457.93125
452.9375/457.9375
452.94375/457.94375
452.950/457.950
452.95625/457.95625
452.9625/457.9625
452.96875/457.96875

453.025/458.025
453.03125/458.03125
453.0375/458.0375
453.04375/458.04375
453.075/458.075
453.08125/458.08125
453.0875/458.0875
453.09375/458.09375
453.125/458.125
453.13125/458.13125
453.1375/458.1375
453.14375/458.14375
453.175/458.175
453.18125/458.18125
453.1875/458.1875
453.19375/458.19375

454.000/459.000
454.00625/459.00625
454.0125/459.0125
454.01875/459.01875

462.950/467.950
462.95625/467.95625
462.9625/467.9625
462.96875/467.96875
462.975/467.975
462.98125/467.98125
462.9875/467.9875
462.99375/467.99375
463.000/468.000
463.00625/468.00625
463.0125/468.0125
463.01875/468.01875
463.025/468.025
463.03125/468.03125
463.0375/468.0375
463.04375/468.04375
463.050/468.050
463.05625/468.05625
463.0625/468.0625
463.06875/468.06875
463.075/468.075
463.08125/468.08125
463.0875/468.0875
463.09375/468.09375
463.100/468.100
463.10625/468.10625
463.1125/468.1125
463.11875/468.11875
463.125/468.125
463.13125/468.13125
463.1375/468.1375
463.14375/468.14375
463.150/468.150
463.15625/468.15625
463.1625/468.1625
463.16875/468.16875
463.175/468.175
463.18125/468.18125
463.1875/468.1875
463.19375/468.19375

37. Section 90.267 is revised to read as follows:

§ 90.267 Assignment and use of frequencies in the 450–470 MHz band for low-power use.

(a) Any regularly assignable frequency in the 450–470 MHz band listed in the tables in subparts B, C, D, and E of this part, may be designated as a low-power channel in a defined geographic area by the frequency coordinator of the service in which the frequency is available. These channels are subject to the following conditions.

(1) For channels available in more than one radio service, concurrence for low-power designation must be obtained from coordinators of all such services.

(2) For channels available in more than one radio service, the frequency coordination requirements in § 90.175 apply in all such services.

(3) Stations are limited to 2 watts output power.

(4) Wide area operations will not be authorized. The area of normal day-to-

day operations will be described in the application in terms of maximum distance from a geographical center (latitude and longitude).

(5) A hospital or health care institution holding a license to operate a radio station under this part may operate a medical radio telemetry device with an output power not to exceed 20 milliwatts without specific authorization from the Commission. All licensees operating under this authority must comply with the requirements and limitations set forth in this section.

(6) Each coordinator must maintain a list of all channels it designates for low-power use and the geographic areas where such channels are available. The coordinator must make this list available to the public upon request.

(b) Frequencies separated by 3.125 kHz from regularly assignable frequencies in the 450–470 MHz band listed in the Tables in subparts B, C, D, and E of this part, may be assigned in accordance with the following conditions:

(1) All stations will be licensed as mobiles but may serve the functions of base, fixed, or mobile relay stations. Stations are limited to 2 watts output power.

(2) The maximum authorized bandwidth for these frequencies is 6 kHz.

(3) All operations will be on a secondary basis to the primary operations (3.125 kHz removed) and shall be entitled to no protection from primary stations.

(4) The frequency coordination requirements in § 90.175 apply for all channels available under this section. For channels which are between primary channels available to more than one service of this section, the frequency coordination requirements in § 90.175 apply in all such services.

(5) Wide area operations will not be authorized. The area of normal day-to-day operations will be described in the application in terms of maximum distance from a geographical center (latitude and longitude).

(6) Applicants for stations under this section must specify base, mobile, or fixed operation, but are otherwise exempt from any limitation on the number of frequencies assignable contained elsewhere in Part 90.

(7) Antennas of mobile stations used as fixed stations communicating with one or more associated stations located within 45 degrees of azimuth shall be directional and have a front to back ratio of at least 15 dB. Except as provided in this paragraph (b)(7), the height of the antenna used at any mobile station serving as a base, fixed or mobile relay station may not exceed 7 m. (20 ft) above the ground level.

(i) No limit shall be placed on the length or height above ground level of any commercially manufactured radiating transmission line when the transmission line is terminated in a non-radiating load and is routed at least 7 m. (20 ft) interior to the edge of any structure or is routed below ground level.

(ii) Only sea-based stations, and central alarm stations operating on frequencies allocated for central station protection operations, may utilize antennas mounted not more than 7 m. (20 ft.) above a man-made supporting structure, including antenna structures.

(8) A hospital or health care institution holding a license to operate a radio station under this part may operate a medical radio telemetry device with an output power not to exceed 20 milliwatts without specific authorization from the Commission. All licensees operating under this authority must comply with the requirements and limitations set forth in this section.

(9) No assignment will be made on a frequency immediately adjacent to non-private radio service allocations.

(10) Frequencies from 462.7375 MHz to 462.9375 MHz and 464.9875 MHz to 465.0125 MHz are not available for authorization.

(11) Frequencies from 460.900 MHz to 461.01875 MHz and 465.900 MHz to 466.01875 MHz are available only for listed central station protection services and subject to § 90.75(c)(27) and (41).

§ 90.271 [Removed]

38. Section 90.271 is removed.

39. Section 90.273 is amended by revising paragraph (a) to read as follows:

§ 90.273 Availability and use of frequencies in the 421–430 MHz band.

* * * * *

(a) The following tables list frequencies available for assignment in the public safety, business or industrial/land transportation pools as indicated. In the tables, the public safety pool is denoted as ''PS'', the business pool as ''B'', and the industrial/land transportation pool as ''I/LT.'' The frequencies 422.19375 MHz through 424.99375 MHz are paired with frequencies 427.19375 MHz through 429.99375 MHz, respectively. Only the lower half of each frequency pair, available for base station operation, is listed in the tables. Corresponding mobile and control station frequencies are 5 MHz higher than the base station frequency. The frequencies 425.000 through 425.48125 are unpaired and are available for either single frequency dispatch or paging operations.

TABLE 1.—CHANNELS AVAILABLE IN DETROIT AND CLEVELAND AREAS ONLY

Frequency (MHz)	Pool in which assigned
Paired channels:	
422.19375*	I/LT
422.200	I/LT
422.20625*	I/LT
422.21250	I/LT
422.21875*	I/LT
422.225	I/LT
422.23125*	I/LT
422.23750	I/LT
422.24375*	I/LT
422.250	I/LT
422.25625*	I/LT
422.26250	I/LT
422.26875*	I/LT
422.275	I/LT
422.28125*	I/LT
422.28750	I/LT
422.29375*	I/LT
422.300	I/LT
422.30625*	I/LT
422.31250	I/LT
422.31875*	I/LT
422.325	I/LT
422.33125*	I/LT
422.33750	I/LT
422.34375*	I/LT
422.350	I/LT
422.35625*	I/LT
422.36250	I/LT
422.36875*	I/LT
422.375	I/LT
422.38125*	I/LT
422.38750	I/LT
422.39375*	I/LT
422.400	I/LT
422.40625*	I/LT
422.41250	I/LT
422.41875*	I/LT
422.425	I/LT
422.43125*	I/LT
422.43750	I/LT
422.44375*	I/LT
422.450	I/LT
422.45625*	I/LT
422.46250	I/LT
422.46875*	I/LT
422.475	I/LT
422.48125*	I/LT
422.48750	I/LT
422.49375*	I/LT
422.500	I/LT
422.50625*	I/LT
422.51250	I/LT
422.51875*	I/LT
422.525	I/LT
422.53125*	I/LT
422.53750	I/LT
422.54375*	I/LT
422.550	I/LT
422.55625*	I/LT
422.56250	I/LT
422.56875*	I/LT
422.575	I/LT
422.58125*	I/LT
422.58750	I/LT
422.59375*	I/LT
422.600	B
422.60625*	B
422.61250	B

TABLE 1.—CHANNELS AVAILABLE IN DETROIT AND CLEVELAND AREAS ONLY—Continued

Frequency (MHz)	Pool in which assigned
422.61875*	B
422.625	B
422.63125*	B
422.63750	B
422.64375*	B
422.650	B
422.65625*	B
422.66250	B
422.66875*	B
422.675	B
422.68125*	B
422.68750	B
422.69375*	B
422.700	B
422.70625*	B
422.71250	B
422.71875*	B
422.725	B
422.73125*	B
422.73750	B
422.74375*	B
422.750	B
422.75625*	B
422.76250	B
422.76875*	B
422.775	B
422.78125*	B
422.78750	B
422.79375*	B
422.800	B
422.80625*	B
422.81250	B
422.81875*	B
422.825	B
422.83125*	B
422.83750	B
422.84375*	B
422.850	B
422.85625*	B
422.86250	B
422.86875*	B
422.875	B
422.88125*	B
422.88750	B
422.89375*	B
422.900	B
422.90625*	B
422.91250	B
422.91875*	B
422.925	B
422.93125*	B
422.93750	B
422.94375*	B
422.950	B
422.95625*	B
422.96250	B
422.96875*	B
422.975	B
422.98125*	B
422.98750	B
422.99375*	B
423.000	PS
423.00625*	PS
423.01250	PS
423.01875*	PS
423.025	PS
423.03125*	PS
423.03750	PS

TABLE 1.—CHANNELS AVAILABLE IN DETROIT AND CLEVELAND AREAS ONLY—Continued

Frequency (MHz)	Pool in which assigned
423.04375*	PS
423.050	PS
423.05625*	PS
423.06250	PS
423.06875*	PS
423.075	PS
423.08125*	PS
423.08750	PS
423.09375*	PS
423.100	PS
423.10625*	PS
423.11250	PS
423.11875*	PS
423.125	PS
423.13125*	PS
423.13750	PS
423.14375*	PS
423.150	PS
423.15625*	PS
423.16250	PS
423.16875*	PS
423.175	PS
423.18125*	PS
423.18750	PS
423.19375*	PS
423.200	PS
423.20625*	PS
423.21250	PS
423.21875*	PS
423.225	PS
423.23125*	PS
423.23750	PS
423.24375*	PS
423.250	PS
423.25625*	PS
423.26250	PS
423.26875*	PS
423.275	PS
423.28125*	PS
423.28750	PS
423.29375*	PS
423.300	PS
423.30625*	PS
423.31250	PS
423.31875*	PS
423.325	PS
423.33125*	PS
423.33750	PS
423.34375*	PS
423.350	PS
423.35625*	PS
423.36250	PS
423.36875*	PS
423.375	PS
423.38125*	PS
423.38750	PS
423.39375*	PS
423.400	PS
423.40625*	PS
423.41250	PS
423.41875*	PS
423.425	PS
423.43125*	PS
423.43750	PS
423.44375*	PS
423.450	PS
423.45625*	PS
423.46250	PS

TABLE 1.—CHANNELS AVAILABLE IN DETROIT AND CLEVELAND AREAS ONLY—Continued

Frequency (MHz)	Pool in which assigned
423.46875*	PS
423.475	PS
423.48125*	PS
423.48750	PS
423.49375*	PS
423.500	PS
423.50625*	PS
423.51250	PS
423.51875*	PS
423.525	PS
423.53125*	PS
423.53750	PS
423.54375*	PS
423.550	PS
423.55625*	PS
423.56250	PS
423.56875*	PS
423.575	PS
423.58125*	PS
423.58750	PS
423.59375*	PS
423.600	PS
423.60625*	PS
423.61250	PS
423.61875*	PS
423.625	PS
423.63125*	PS
423.63750	PS
423.64375*	PS
423.650	PS
423.65625*	PS
423.66250	PS
423.66875*	PS
423.675	PS
423.68125*	PS
423.68750	PS
423.69375*	PS
423.700	PS
423.70625*	PS
423.71250	PS
423.71875*	PS
423.725	PS
423.73125*	PS
423.73750	PS
423.74375*	PS
423.750	PS
423.75625*	PS
423.76250	PS
423.76875*	PS
423.775	PS
423.78125*	PS
423.78750	PS
423.79375*	PS
423.800	PS
423.80625*	PS

*This frequency is not available until August 18, 1996. After August 18, 1996 this frequency will be assigned with an authorized bandwidth not to exceed 6 kHz.

TABLE 2.—CHANNELS AVAILABLE IN BUFFALO, DETROIT AND CLEVELAND AREAS

Frequency (MHz)	Pool in which assigned
Paired channels:	
423.81875*	PS
423.825	PS
423.83125*	PS
423.83750	PS
423.84375*	PS
423.850	PS
423.85625*	PS
423.86250	PS
423.86875*	PS
423.875	PS
423.88125*	PS
423.88750	PS
423.89375*	PS
423.900	PS
423.90625*	PS
423.91250	PS
423.91875*	PS
423.925	PS
423.93125*	PS
423.93750	PS
423.94375*	PS
423.950	PS
423.95625*	PS
423.96250	PS
423.96875*	PS
423.975	PS
423.98125*	PS
423.98750	PS
423.99375*	PS
424.000	PS
424.00625*	PS
424.01250	PS
424.01875*	PS
424.025	PS
424.03125*	PS
424.03750	PS
424.04375*	PS
424.050	PS
424.05625*	PS
424.06250	PS
424.06875*	PS
424.075	PS
424.08125*	PS
424.08750	PS
424.09375*	PS
424.100	PS
424.10625*	PS
424.11250	PS
424.11875*	PS
424.125	PS
424.13125*	PS
424.13750	PS
424.14375*	PS
424.150	PS
424.15625*	PS
424.16250	PS
424.16875*	PS
424.175	PS
424.18125*	PS
424.18750	PS
424.19375*	PS
424.200	PS
424.20625*	PS
424.21250	PS
424.21875*	PS
424.225	PS
424.23125*	PS

TABLE 2.—CHANNELS AVAILABLE IN BUFFALO, DETROIT AND CLEVELAND AREAS—Continued

Frequency (MHz)	Pool in which assigned
424.23750	PS
424.24375*	PS
424.250	PS
424.25625*	PS
424.26250	PS
424.26875*	PS
424.275	PS
424.28125*	PS
424.28750	PS
424.29375*	PS
424.300	PS
424.30625*	PS
424.31250	PS
424.31875*	PS
424.325	PS
424.33125*	PS
424.33750	PS
424.34375*	PS
424.350	PS
424.35625*	PS
424.36250	PS
424.36875*	PS
424.375	PS
424.38125*	PS
424.38750	PS
424.39375*	PS
424.400	I/LT
424.40625*	I/LT
424.41250	I/LT
424.41875*	I/LT
424.425	I/LT
424.43125*	I/LT
424.43750	I/LT
424.44375*	I/LT
424.450	I/LT
424.45625*	I/LT
424.46250	I/LT
424.46875*	I/LT
424.475	I/LT
424.48125*	I/LT
424.48750	I/LT
424.49375*	I/LT
424.500	I/LT
424.50625*	I/LT
424.51250	I/LT
424.51875*	I/LT
424.525	I/LT
424.53125*	I/LT
424.53750	I/LT
424.54375*	I/LT
424.550	I/LT
424.55625*	I/LT
424.56250	I/LT
424.56875*	I/LT
424.575	I/LT
424.58125*	I/LT
424.58750	I/LT
424.59375*	I/LT
424.600	I/LT
424.60625*	I/LT
424.61250	I/LT
424.61875*	I/LT
424.625	I/LT
424.63125*	I/LT
424.63750	I/LT
424.64375*	I/LT
424.650	I/LT
424.65625*	I/LT

TABLE 2.—CHANNELS AVAILABLE IN BUFFALO, DETROIT AND CLEVELAND AREAS—Continued

Frequency (MHz)	Pool in which assigned
424.66250	I/LT
424.66875*	I/LT
424.675	I/LT
424.68125*	I/LT
424.68750	I/LT
424.69375*	I/LT
424.700	B
424.70625*	B
424.71250	B
424.71875*	B
424.725	B
424.73125*	B
424.73750	B
424.74375*	B
424.750	B
424.75625*	B
424.76250	B
424.76875*	B
424.775	B
424.78125*	B
424.78750	B
424.79375*	B
424.800	B
424.80625*	B
424.81250	B
424.81875*	B
424.825	B
424.83125*	B
424.83750	B
424.84375*	B
424.850	B
424.85625*	B
424.86250	B
424.86875*	B
424.875	B
424.88125*	B
424.88750	B
424.89375*	B
424.900	B
424.90625*	B
424.91250	B
424.91875*	B
424.925	B
424.93125*	B
424.93750	B
424.94375*	B
424.950	B
424.95625*	B
424.96250	B
424.96875*	B
424.975	B
424.98125*	B
424.98750	B
424.99375*	B
Single channels:	
425.000	B
425.00625*	B
425.01250	B
425.01875*	B
425.025	B
425.03125*	B
425.03750	B
425.04375*	B
425.050	B
425.05625*	B
425.06250	B
425.06875*	B
425.075	B

TABLE 2.—CHANNELS AVAILABLE IN BUFFALO, DETROIT AND CLEVELAND AREAS—Continued

Frequency (MHz)	Pool in which assigned
425.08125*	B
425.08750	B
425.09375*	B
425.100	B
425.10625*	B
425.11250	B
425.11875*	B
425.125	I/LT
425.13125*	I/LT
425.13750	I/LT
425.14375*	I/LT
425.150	I/LT
425.15625*	I/LT
425.16250	I/LT
425.16875*	I/LT
425.175	I/LT
425.18125*	I/LT
425.18750	I/LT
425.19375*	I/LT
425.200	I/LT
425.20625*	I/LT
425.21250	I/LT
425.21875*	I/LT
425.225	I/LT
425.23125*	I/LT
425.23750	I/LT
425.24375*	I/LT
425.250	PS
425.25625*	PS
425.26250	PS
425.26875*	PS

TABLE 2.—CHANNELS AVAILABLE IN BUFFALO, DETROIT AND CLEVELAND AREAS—Continued

Frequency (MHz)	Pool in which assigned
425.275	PS
425.28125*	PS
425.28750	PS
425.29375*	PS
425.300	PS
425.30625*	PS
425.31250	PS
425.31875*	PS
425.325	PS
425.33125*	PS
425.33750	PS
425.34375*	PS
425.350	PS
425.35625*	PS
425.36250	PS
425.36875*	PS
425.375	PS
425.38125*	PS
425.38750	PS
425.39375*	PS
425.400	PS
425.40625*	PS
425.41250	PS
425.41875*	PS
425.425	PS
425.43125*	PS
425.43750	PS
425.44375*	PS
425.450	PS
425.45625*	PS
425.46250	PS

TABLE 2.—CHANNELS AVAILABLE IN BUFFALO, DETROIT AND CLEVELAND AREAS—Continued

Frequency (MHz)	Pool in which assigned
425.46875*	PS
425.475	PS
425.48125*	PS

*This frequency is not available until August 18, 1996. After August 18, 1996 this frequency will be assigned with an authorized bandwidth not to exceed 6 kHz.

* * * * *

40. Section 90.311 is amended by revising the introductory text and table in paragraph (a), adding paragraph (a)(3), revising the introductory text and table in paragraph (b), and revising paragraphs (b)(2) and (b)(4) to read as follows:

§ 90.311 Frequencies.

(a) Except as provided for in § 90.315, the following frequencies in the band 470–512 MHz may be assigned to eligibles in the services as indicated below. The first and last assignable frequencies are shown. Assignable frequencies occur in increments of 6.25 kHz. The separation between base and mobile transmit frequencies is 3 MHz for two frequency operations.

Urbanized area (channel assignment)	Public safety pool Fire, police, local government, highway maintenance, forestry conservation, and emergency medical radio services		Industrial pools						Petroleum, forest products, and manufacturers radio service		Land transportation pools				General access pool	
			Power and telephone maintenance radio service		Special industrial radio service		Business radio service				Railroad, motor carrier, and automobile emergency radio service		Taxicab radio service			
	Base and mobile	Mobile	Base and mobile	Mobile	Base and mobile	Mobile	Base and mobile	Mobile	Base and mobile	Mobile	Base and mobile	Mobile	Base and mobile	Mobile	Base and mobile	Mobile
Boston																
Ch. 14	470.30632 to 471.14375.	473.30625 to 474.14375.	471.30625 to 471.39375.	474.30625 to 474.39375.	471.45625 to 471.49375.	474.45625 to 474.49375.	471.80625 to 472.06875 and 472.10625 to 472.21875 and 472.25625 to 472.26875.	474.80625 to 475.06875 and 475.10625 to 475.21875 and 475.25625 to 475.26875.	None	None	472.45625 to 472.54375 and 472.58125 to 472.69375 and 472.73125 to 472.74375 and 472.78125 to 472.79375.	475.45625 to 475.54375 and 475.58125 to 475.69375 and 475.73125 to 475.74375 and 475.78125 to 475.79375.	472.35625 to 472.44375.	475.35625 to 475.44375.	470.30625 to 472.99375.	473.30625 to 475.99375.
Ch. 16	482.30625 to 483.14375.	485.30625 to 486.14375.	None	None	483.48125 to 484.34375.	486.48125 to 487.34375.	None	None	None	None	None	None	None	None	482.30625 to 484.99375.	485.30625 to 487.99375.
Chicago																
Ch. 14	470.30625 to 471.14375.	473.30625 to 474.14375.	None	None	471.43125 to 471.64375.	474.43125 to 474.64375.	471.80625 to 472.34375 and 472.63125 to 472.79375 and 472.90625 to 472.91875 and 472.95625 to 472.96875 and 472.98125 to 472.99375.	474.80625 to 475.34375 and 475.63125 to 475.79375 and 475.90625 to 475.91875 and 475.95625 to 475.96875 and 475.98125 to 475.99375.	472.80625 to 472.81875.	475.80625 to 475.81875.	472.45625 to 472.61875 and 472.93125 to 472.94375.	475.45625 to 475.61875 and 475.93125 to 475.94375.	None	None	470.30625 to 472.99375.	473.30625 to 475.99375.
Ch. 15	None	None	None	None	None	None	None	None	None	None	None	None	None	None	476.30625 to 478.99375.	479.30625 to 481.99375.
Cleveland																
Ch. 14	None	None	None	None	None	None	None	None	None	None	None	None	None	None	470.30625 to 472.99375.	473.30625 to 475.99375.
Ch. 15	None	None	None	None	None	None	None	None	None	None	None	None	None	None	476.30625 to 478.99375.	479.30625 to 481.99375.
Detroit																
Ch. 15	None	None	None	None	None	None	None	None	None	None	None	None	None	None	476.30625 to 478.99375.	479.30625 to 481.99375.
Ch. 16	None	None	None	None	None	None	None	None	None	None	None	None	None	None	482.30625 to 484.99375.	485.30625 to 487.99375.
Los Angeles																
Ch. 14	470.05625 to 471.13125.	473.05625 to 474.14375.	471.30625 to 471.31875 and 471.40625 to 471.41875.	474.30625 to 474.31875 and 474.40625 to 474.41875.	471.43125 to 471.64375.	474.43125 to 474.64375.	471.15625 to 471.29375 and 471.65625 to 472.44375.	474.15625 to 474.29375 and 474.65625 to 475.44375.	472.83725 to 472.89375.	475.83725 to 475.89375.	472.45625 to 472.79375.	475.45625 to 475.79375.	472.98125 to 472.99375.	475.98125 to 475.99375.	470.30625 to 472.99375.	473.30625 to 475.99375.
Ch. 16	482.00625 to 484.99375.	485.00625 to 487.99375.	None	None	None	None	None	None	None	None	None	None	None	None	None	None
Ch. 20	506.30625 to 507.26875.	509.30625 to 510.26875.	507.30625 to 507.40625.	510.30625 to 510.40625.	507.43125 to 507.64375.	510.43125 to 510.64375.	507.65625 to 508.44375 and 507.28125 to 507.29375.	510.65625 to 511.44375 and 510.28125 to 510.29375.	508.80625 to 508.89375.	511.80625 to 511.89375.	508.45625 to 508.79375.	511.45625 to 511.79375.	508.90625 to 508.91875.	511.90625 to 511.91875.	506.30625 to 508.99375.	509.30625 to 511.99375.

Urbanized area (channel assignment)	Public safety pool Fire, police, local government, highway maintenance, forestry conservation, and emergency medical radio services		Industrial pools						Petroleum, forest products, and manufacturers radio service		Land transportation pools				General access pool	
			Power and telephone maintenance radio service		Special industrial radio service		Business radio service				Railroad, motor carrier, and automobile emergency radio service		Taxicab radio service			
	Base and mobile	Mobile	Base and mobile	Mobile	Base and mobile	Mobile	Base and mobile	Mobile	Base and mobile	Mobile	Base and mobile	Mobile	Base and mobile	Mobile	Base and mobile	Mobile
New York																
Ch. 14	470.30625 to 471.41875.	473.30625 to 474.41875.	472.95625 to 472.96875 and 472.98125 to 472.99375.	475.95625 to 475.96875 and 475.98125 to 475.99375.	471.43125 to 471.64375.	474.43125 to 474.64375.	471.65625 to 472.34375 and 472.75625 to 472.89375.	474.65625 to 475.34375 and 475.75625 to 475.89375.	None	None	472.45625 to 472.61875.	475.45625 to 475.61875.	472.35625 to 472.44375 and 472.63125 to 472.66875 and 472.73125 to 472.74375 and 472.68125 to 472.69375.	475.35625 to 475.44375 and 475.63125 to 475.66875 and 475.73125 to 475.74375 and 475.68125 to 475.69375.	470.30625 to 472.99375.	473.30625 to 475.99375.
Ch. 15	476.30625 to 477.40625.	479.30625 to 480.40625.	478.95625 to 478.99375.	481.95625 to 481.99375.	477.43125 to 477.64375.	480.43125 to 480.64375.	477.65625 to 478.34375 and 478.75625 to 478.89375.	480.65625 to 481.34375 and 481.75625 to 481.89375.	None	None	478.50625 to 478.69375 and 478.68125 to 478.69375.	481.50625 to 481.69375 and 481.68125 to 481.69375.	478.35625 to 478.66875.	481.35625 to 481.66875.	476.30625 to 478.99375.	479.30625 to 481.99375.
Philadelphia																
Ch. 19	500.30625 to 500.44375 and 500.55625 to 500.56875 and 500.65625 to 500.66875 and 500.68125 to 500.69375 and 500.73125 to 500.74375 and 500.78125 to 500.91875 and 500.95625 to 500.96875 and 500.98125 to 500.99375 and 501.05625 to 501.06875 and 501.10625 to 501.11875 and 501.13125 to 501.14375.	503.30625 to 503.44375 and 503.55625 to 503.56875 and 503.65625 to 503.66875 and 503.68125 to 503.69375 and 503.73125 to 503.74375 and 503.78125 to 503.91875 and 503.95625 to 503.96875 and 503.98125 to 503.99375 and 504.05625 to 504.06875 and 504.10625 to 504.11875 and 504.13125 to 504.14375.	None	None	501.43125 to 501.49375 and 501.53125 to 501.54375 and 501.60625 to 501.61875.	504.43125 to 504.49375 and 504.53125 to 504.54375 and 504.60625 to 504.61875.	501.80625 to 502.34375.	504.80625 to 505.34375.	None	None	502.45625 to 502.79375.	505.45625 to 505.79375.	None	None	500.30625 to 502.99375.	503.30625 to 505.99375.
Ch. 20	None	None	None	None	None	None	507.80625 to 508.19375 and 508.23125 to 508.34375.	510.80625 to 511.19375 and 511.23125 to 511.34375.	None	None	None	None	None	None	506.30625 to 508.99375.	509.30625 to 511.99375.
Pittsburgh																
Ch. 14	None	None	None	None	None	None	471.80625 to 471.81875.	474.80625 to 474.81875.	None	None	None	None	None	None	470.30625 to 472.99375.	473.30625 to 475.99375.
Ch. 18	None	None	None	None	None	None	None	None	None	None	None	None	None	None	494.30625 to 496.99375.	497.30625 to 499.99375.

San Francisco																
Ch. 16	482.30625 to 482.31875 and 482.33125 to 482.34375 and 482.38125 to 482.49375 and 482.53125 to 482.54375 and 482.55625 to 482.56875 and 482.60625 to 482.61875 and 482.68125 to 482.76875 and 482.80625 to 482.91875 and 482.95625 to 482.96875 and 483.00625 to 483.01875.	485.30625 to 485.31875 and 485.33125 to 485.34375 and 485.38125 to 485.49375 and 485.53125 to 485.54375 and 485.55625 to 485.56875 and 485.60625 to 485.61875 and 485.68125 to 485.76875 and 485.80625 to 485.91875 and 485.95625 to 485.96875 and 486.00625 to 486.01875.	None	None	483.43125 to 483.64375.	486.43125 to 486.64375.	483.80625 to 484.34375.	486.80625 to 487.34375.	None	None	484.45625 to 484.79375.	487.45625 to 487.79375.	None	None	482.30625 to 484.99375.	485.30625 to 487.99375.
Ch. 17	488.35625 to 488.46875 and 488.50625 to 488.51875 and 488.55625 to 488.56875 and 488.60625 to 488.69375 and 488.73125 to 488.74375 and 488.76125 to 488.77375 and 488.83125 to 488.84375 and 488.85625 to 488.86875 and 488.90625 to 488.91875 and 488.95625 to 488.96875 and 489.00625 to 489.06875 and 489.10625 to.	491.35625 to 491.46875 and 491.50625 to 491.51875 and 491.55625 to 491.56875 and 491.60625 to 491.69375 and 491.73125 to 491.74375 and 491.76125 to 491.77375 and 491.83125 to 491.84375 and 491.85625 to 491.86875 and 491.90625 to 491.91875 and 491.95625 to 491.96875 and 491.00625 to 491.06875 and 491.10625 to.	None	None	489.43125 to 489.64375.	492.43125 to 492.64375.	488.80625 to 489.33125.	491.80625 to 492.33125.	490.83125 to 490.48375 and 490.85625 to 490.86875 and 490.90625 to 490.91875 and 490.95625 to 490.96875.	493.83125 to 493.48375 and 493.85625 to 493.86875 and 493.90625 to 493.91875 and 493.95625 to 493.96875.	490.45625 to 490.56875 and 490.60625 to 490.66875 and 490.70625 to 490.71875 and 490.75625 to 490.76875.	493.45625 to 493.56875 and 493.60625 to 493.66875 and 493.70625 to 493.71875 and 493.75625 to 493.76875.	None	None	488.30625 to 490.99375.	491.30625 to 493.99375

Urbanized area (channel assignment)	Public safety pool Fire, police, local government, highway maintenance, forestry conservation, and emergency medical radio services		Industrial pools						Petroleum, forest products, and manufacturers radio service		Land transportation pools				General access pool	
			Power and telephone maintenance radio service		Special industrial radio service		Business radio service				Railroad, motor carrier, and automobile emergency radio service		Taxicab radio service			
	Base and mobile	Mobile	Base and mobile	Mobile	Base and mobile	Mobile	Base and mobile	Mobile	Base and mobile	Mobile	Base and mobile	Mobile	Base and mobile	Mobile	Base and mobile	Mobile
Washington, DC																
Ch. 17	488.30625 to 488.31875.	491.30625 to 491.91875.	None	None	None	None	None	None	None	None	None	None	None	None	488.30625 to 490.99375.	491.30625 to 493.99375.
Ch. 18	494.30625 to 495.41875.	497.30625 to 498.41875.	None	None	495.58125 to 495.64375.	498.58125 to 498.64375.	495.68125 to 496.21875.	498.68125 to 499.21875.	None	None	496.45625 to 496.61875.	499.45625 to 499.61875.	496.35625 to 496.39375.	499.35625 to 499.39375.	494.30625 to 496.99375.	497.30625 to 499.99375

* * * * *

(3) The following frequencies will be authorized a maximum bandwidth of 6 kHz.

Channel	Frequency
14	470.30625 475.99375
15	476.30625
16	481.99375 482.30625 487.99375
17	488.30625 493.99375
18	494.30625 499.99375
19	500.30625
20	505.99375 506.30625 511.99375

* * * * *

(b) Miami, FL, Dallas, TX, and Houston, TX urbanized areas.

Channel 14 (Miami)	Channel 16 (Dallas)	Channel 17 (Houston)
470.30625 to 475.99375	482.30625 to ... 487.99375	488.30625 to 493.99375

* * * * *

(2) Base station frequencies for the Petroleum, Forest Products, and Manufacturers Radio Services will be assigned serially beginning at 470.30625 MHz for Miami, 482.30625 MHz for Dallas, and 488.30625 MHz for Houston and progressing upward from those points a channel at a time.

* * * * *

(4) Base station frequencies for the Business Radio Service will be assigned serially beginning at 470.30625, 471.2625, and 472.3625 MHz for Miami, 483.6125 and 483.1375 MHz for Dallas, and 489.6625 MHz and 490.3625 MHz for Houston and progressing, a channel at a time from those points.

mobile station frequencies are 3 MHz higher than the corresponding base station frequencies. Normally, each channel shall be substantially filled before the next channel is assigned.

* * * * *

41. Section 90.315 is amended by revising paragraph (j) and removing paragraphs (l) and (m) to read as follows:

§ 90.315 Special provisions governing use of frequencies in the 476–494 MHz band (TV Channels 15, 16, 17) in the Southern Louisiana-Texas Offshore Zone.

* * * * *

(j) The following frequency bands are available for assignment in all services for use in the Zones as defined in paragraph (a) of this section.

PAIRED FREQUENCIES (MHZ)

Zone	Transmit (or receive)	Receive (or transmit)
A	490.01875–490.98125	493.01875–493.98125
B	484.01875–484.98125	487.01875–487.98125
C	478.01875–478.98125	481.01875–481.98125

Only the first and last assignable frequencies are shown. Frequencies shall be assigned in pairs with 3 MHz spacing between transmit and receive frequencies. Assignable frequency pairs will occur in increments of 6.25 kHz. The following frequencies will be assigned for a maximum authorized bandwidth of 6 kHz: 478.01875, 478.98125, 484.01875, 484.98125, 490.01875, 490.98125, 481.01875, 481.98125, 487.01875, 487.98125, 493.01875, and 493.98125.

* * * * *

42. Section 90.357 is amended by revising the second sentence of footnote 1 to the table in paragraph (a) to read as follows:

§ 90.357 Frequencies for LMS systems in the 902–928 MHz band.

(a) * * *

[1] * * * However, the maximum allowable power in these sub-bands is 30 watts ERP in accordance with § 90.205(j).

§ 90.555 [Removed]

43. Section 90.555 is removed.

44. Section 90.741 is amended by revising the table heading to read as follows:

§ 90.741 Urban areas for nationwide systems.

* * * * *

TABLE

Urban area	North latitude	West longitude
	° ′ ″	° ′ ″

* * * * *

[FR Doc. 95–17301 Filed 7–18–95; 8:45 am]

BILLING CODE 6712–01–P

federal register

Wednesday
July 19, 1995

Part III

Department of Defense

Department of the Army
Corps of Engineers

33 CFR Parts 320, 326 and 331
Proposal To Establish an Administrative Appeal Process for the Regulatory Programs of the Corps of Engineers; Proposed Rule

DEPARTMENT OF DEFENSE

Department of the Army

Corps of Engineers

33 CFR Parts 320, 326 and 331

Proposal To Establish an Administrative Appeal Process for the Regulatory Programs of the Corps of Engineers

AGENCY: Corps of Engineers, Army Department, DOD.

ACTION: Proposed rule.

SUMMARY: The Corps of Engineers is proposing to establish an administrative appeal process to include in its regulatory program regulations (33 CFR parts 320–330). There is currently no administrative appeal process under which parties may contest Corps of Engineers regulatory determinations. Adverse decisions must be challenged in Federal District Court, and this formal judicial process may be time-consuming and financially burdensome for many parties. The proposed rule would provide permit applicants and landowners an opportunity to appeal permit denials and jurisdictional determinations.

DATES: Comments must be received by September 5, 1995.

ADDRESSES: Comments should be submitted in writing to: Office of the Chief of Engineers, ATTN: CECW–OR, 20 Massachusetts Avenue NW., Washington, DC 20314–1000. Comments will be available for examination in Corps District and Division offices or at the Office of the Chief of Engineers, Room 6225, Pulaski Building, 20 Massachusetts Avenue NW., Washington, DC 20314–1000.

FOR FURTHER INFORMATION CONTACT: Mr. Sam Collinson or Mr. Michael L. Davis, Corps of Engineers Regulatory Branch, (202) 761–0199.

SUPPLEMENTARY INFORMATION:

I. Background

Shortly after coming into office, the Clinton Administration convened an interagency working group to address legitimate concerns with Federal wetlands policy. After hearing from States, developers, farmers, environmental interests, members of Congress, and scientists, the working group developed a comprehensive, 40-point plan to enhance wetlands protection, while making wetlands regulations more fair, flexible, and effective to everyone, including America's small landowners. The Plan was issued on August 24, 1993. It emphasizes improving Federal wetlands policy through various means, including streamlining wetlands permitting programs. One of several approaches identified in the Plan for achieving such streamlining is through development by the Corps of a Clean Water Act Section 404 administrative appeals process, to be implemented after a public rulemaking. The Plan provides that the process will be designed to allow for administrative appeals of Section 404 geographic jurisdictional determinations, permit denials, and administrative penalties.

The rule proposed herein is responsive to the President's directive. The appeal process is designed to allow administrative appeals to the Corps regarding two distinct decisions: (1) That a geographic area, including a particular parcel of property that is determined to be a wetland as defined in 33 CFR 328.3(b) and delineated in accordance with the Federal manual for delineating and identifying wetlands, is subject to Corps regulatory jurisdiction pursuant to Section 404 of the Clean Water Act and/or Section 10 of the Rivers and Harbors Act of 1899; and (2) denial with prejudice by the District Engineer of a Department of the Army permit, which includes cases where a proffered permit is refused by the applicant because the applicant objects to the terms or special conditions of the proffered permit and the permit is subsequently denied with prejudice by the District Engineer. Consistent with the Plan and as explained below, third parties can participate only in applicant appeals of permit denials.

As indicated above, the Plan also addresses administrative appeals of administrative penalty assessments. Section 309(g) of the CWA authorizes the Corps and EPA to assess administrative penalties for, among other things, unauthorized discharges of dredged or fill material into wetlands and other waters of the United States in violation of Section 404. The CWA establishes two classes of administratively assessed penalties, which differ with respect to maximum assessment and prescribed procedure. EPA and the Corps have implemented the requirements of Section 309(g) as follows. With regard to EPA, proposed assessments of Class II administrative penalties for Section 404 violations can be reviewed by an Administrative Law Judge through a hearing process, the procedures for which are set forth at 40 CFR Part 22. EPA proposed assessments of Class I administrative penalties can be reviewed by a Presiding Officer through a hearing process according to procedures set forth at 40 CFR Part 28. (Note that EPA issued a proposed rule establishing such procedures, see 56 FR 29996 (July 1, 1991); pending issuance of a final rule, the EPA is applying the proposed rule as EPA guidance.) With regard to the Corps, proposed assessments of Class I administrative penalties, like EPA's process, can be reviewed by a Presiding Officer through a hearing process according to procedures set forth at 33 CFR 326. The Corps is developing, but has not yet proposed, regulations for assessing Class II administrative penalties. The Corps expects that its Class II regulations will be similar to those of EPA's.

Also consistent with the Administration Wetlands Plan, the August 1993 Interagency Memorandum of Agreement (MOA) between the Department of Agriculture, the Environmental Protection Agency, the Department of the Interior and the Department of the Army concerning the delineation of wetlands for purposes of Section 404 of the CWA and Subtitle B of the Food Security Act, provides that persons who are adversely affected by Natural Resources Conservation Service (NRCS) wetland delineations on agricultural lands may appeal such wetland delineations under NRCS administrative appeal procedures published at 7 CFR Part 614. Under these procedures, any person who is adversely or potentially adversely affected by an NRCS wetland delineation can appeal that decision. This may be an owner, operator, tenant or partner of the farm to which the NRCS decision applies. The NRCS appeals procedures currently has four levels: (1) The District Conservationist, (2) the Area Conservationist, (3) the State Conservationist, and (4) the Chief of NRCS. The decision of the Chief is final. However, as a result of USDA reorganization the current NRCS appeals process is being revised. Furthermore, according to the MOA, in circumstances where a landowner submits an appeal to NRCS and the State Conservationist is considering a change in the original delineation made by NRCS, the State Conservationist notifies the appropriate Corps and EPA officials to provide those agencies an opportunity for their participation and input on the appeal. The Fish and Wildlife Service is also consulted. The Corps and EPA reserve the right, on a case-by-case basis, to determine that a revised delineation resulting from an NRCS appeal is not valid for the purposes of Section 404 jurisdiction. However, any subsequent jurisdiction determination by the Corps would be

appealable under the appeals process being proposed today.

The proposed administrative appeal process for a final Corps jurisdiction determination is a two-level process. The initial appeal is to an independent jurisdictional expert within a Corps District Office. The second level appeal would be to a regulatory expert within a Corps Division Office. Depending on the specific issues raised the individuals responsible for the appeal process may consult technical experts from other Corps offices. The proposed administrative appeal process for permit denials is a one-level process. The appeal would be to the Corps Division Office. The appeal process would be conducted by a Review Officer in the Division Regulatory Office and the final appeal decision would be made by the Division Engineer. In cases where an applicant refuses a proffered permit because of objectionable conditions, the District Engineer will review the case and will deny the permit, issue the permit without the condition, or offer the applicant a permit with different conditions, which if refused would be denied. In those cases where such proffered permits are denied the applicant may appeal the denial to the Division Engineer.

Filing of a jurisdictional determination appeal under this rule will be limited to the permit applicant or the landowner (i.e., and individual who has an identifiable and substantial legal interest in the property.) The authorized agent of the permit applicant or the landowner may also file the appeal.

Most Corps districts currently have an informal consultation procedure wherein disagreements on jurisdictional determinations or permit decisions are discussed between the Corps Project Manager/supervisor and the landowner/agent/consultant. Based upon additional information or differing interpretations of the data or issues, the preliminary jurisdictional determination or permit decision may be revised or conditioned to the mutual satisfaction of the parties. The Corps encourages the continued use of the informal consultation process as the most efficient and responsive means of resolving jurisdictional and permit issues. If informal consultation proves fruitless, the proposed administrative appeals process provides a formal administrative course of action.

Corps districts also respond to jurisdictional queries by providing an ''office'' jurisdictional determination, based on a review of wetland inventory maps, State or local wetland maps, topographic maps, soils maps, aerial photography, and land-use plans or studies. These office or preliminary jurisdictional determinations are advisory in nature and provided primarily for planning purposes and may not be appealed.

To ensure compliance with national policies and procedures, and consistency among the administrative appeals officers within Division and District regulatory offices, the administrative appeals program will be monitored by the office of the Chief of Engineers. Implementing guidance will be provided when deemed appropriate.

As discussed in further detail below, additional manpower and funding would be necessary for the Corps to implement an administrative appeals process for its regulatory program. The President has included $6 million for the administrative appeals process in the FY 96 budget submitted to Congress. Additionally, training will be necessary for the additional personnel hired to hear the appeal cases and some organizational adjustments may be needed to accommodate an appeals process. Given these considerations, we anticipate that implementation of an administrative appeals process could be accomplished no later than 6 months after the effective date of a final rule. Review officers at Divisions and Districts may begin hearing cases before the projected implementation date if funding, staffing, and training are completed.

II. Proposed Rule Organization

The proposed administrative appeals process rule is organized into the following sections:

Section 331.1, *Purpose and Policy,* describes the basic purpose of the proposed rule and the Corps of Engineers policies regarding the appeals process.

Section 331.2, *Definitions,* contains the definitions of important terms that are used throughout the proposed rule. The following terms are defined in this section: Wetland delineation, jurisdictional determination, permit denial, appealable action, affected party, appellant, review officer, notification of appeals process, and request for appeal.

Section 331.3, *Review Officers,* describes the independence, authority and organizational location of the review officers (ROs). ROs for jurisdictional determinations would be located in District and Division regulatory offices and the ROs for permit denials would be located in Division regulatory offices.

Section 331.4, *Notification of Appealable Actions,* would require that the Corps district office send notification of each appealable action to the affected party in writing. Each notification would contain additional information on the administrative appeals process and provide a form that the affected party must use to request an appeal.

Section 331.5, *Criteria,* describes the criteria which must be met for an action to qualify for the appeals process and also lists specific situations which would preclude an action from qualifying for the appeals process.

Section 331.6, *Filing Appeals,* provides 60 days from the date on the letter of notification of the appealable action, for the affected party to submit a request for appeal to the Corps. In filing the appeal, the affected party must also grant the Corps the right of entry onto the property in order to conduct appropriate field testing and data collection.

Section 331.7, *Review Procedures,* describes the procedures for reviewing a request for appeal (RFA). First, the RFA must be complete and meet the established criteria for appeal. If requested, or determined to be necessary, the RO also has the discretion to conduct a review meeting with the appellant for jurisdictional determinations. For permit denials, an appeal review conference will be held within 60 days after receipt of the RFA. Procedures for conducting the conference are included.

Section 331.8, *Timeframes for Final Appeals Decisions,* establishes the maximum time limits for Corps final appeals decisions.

Section 331.9, *Final Appeals Decisions,* describes the potential outcomes of an appeal process for an appealable action and concludes the administrative appeals process. Additionally, this section discusses the timeframes for the ROs, District Engineers and Division Engineers to reach a final decision on the merits of the appeal.

Section 331.10, *Final Agency Decisions,* describes when a final agency decision has been made for an action that has been appealed.

Section 331.11, *Unauthorized Activities,* discusses the policies and procedures for administrative appeals of appealable actions involving unauthorized activities.

Finally, section 331.12, *Exhaustion of Administrative Remedies,* describes the administrative process and remedies that an appellant must exhaust before he can seek further review or relief from an adverse action through a judicial action in Federal District Court.

III. Administrative Appeal of Jurisdictional Determinations

A. Background

In the day to day implementation of the Clean Water Act Section 404 Regulatory Program, the Corps of Engineers has the primary responsibility for determining whether any particular geographic area, including a wetland, is subject to Corps regulatory authority under section 404 of the Clean Water Act and/or section 10 of the Rivers and Harbors Act of 1899. The administrative appeals process would apply to jurisdictional determinations of geographic extent of waters of the United States.

Currently, the 1987 Corps of Engineers Wetland Delineation Manual (1987 Manual) is used for wetland delineations, which may be performed by Corps, Environmental Protection Agency or Natural Resources Conservation Service employees, the applicant, or a private consultant hired by the applicant. However, if the wetland delineation is performed by the applicant or the applicant's consultant, it is the Corps' responsibility to verify the accuracy of the wetland delineation. Wetland delineations typically constitute two separate determinations: first, a decision that an area falls within the technical definition of a wetland; and second, the establishment of how much of the area is wetland, i.e., the boundary or dividing line between wetlands and uplands by applying the 1987 Manual. When a wetland delineation is part of a jurisdictional determination, which establishes whether a particular area is subject to regulatory authority under section 404 of the Clean Water Act, decisions regarding presence, scope and extent of wetlands, adjacency of wetlands to a waterbody, and the interstate commerce nexus for isolated waters would be appealable under this proposed rule.

The proposed rule would establish a two level administrative appeals process for jurisdictional determinations. The first level appeal would be conducted by a review officer (RO) located in a Corps District regulatory office. Larger districts may require more than one RO. The second level appeal would be conducted by a review officer in the Corps Division regulatory office. While we are proposing a two level appeal process for jurisdictional determinations, we are seeking comments on whether the appeals process should be a one level appeals process and, if so, whether the appeal should be to the District or Division Engineer.

B. First Level Appeal—District Office

The District Engineer, or designee, is responsible for the review of and decision on the first level appeal of jurisdictional determinations. The District Engineer may retain or delegate either or both, the RO responsibilities and the appeals decision to the same or different Corps officials.

We are proposing that the RO should be, or should have the support of, a qualified delineation specialist who has extensive experience in applying the technical criteria of the current wetland delineation manual, is familiar with local geophysical and climatological conditions, and has extensive experience in the determination of jurisdiction. Based on our review of regulatory program requirements and past experiences, we believe that Corps personnel in the respective districts are the best trained and most experienced wetland delineators. Additionally, expert wetland delineators in District offices are usually very experienced with regional geographic jurisdiction issues. Our review also focused on the importance of ensuring that the RO be insulated from the influence of the District's regulatory staff responsible for the appealable action. Therefore, we are also proposing that the RO report directly to the District's Regulatory Branch Chief. This arrangement would remove the RO from day-to-day involvement in routine delineation and jurisdictional decisions made by Regulatory Branch project managers, unit chiefs, and section chiefs. For matters involving routine delineation and jurisdictional decisions, the RO would be equal or above all decision-makers in the Regulatory Branch Office, except for the Regulatory Branch Chief. Furthermore, any particular RO would be disqualified from a case if the RO had worked directly on the case, had involvement in reviewing or providing guidance on the case, or if the decision-maker on the action was the Regulatory Branch Chief, or higher level official. In such circumstances, the Regulatory Branch Chief or higher level decision-maker (at least one level higher than the decision-maker) would appoint an independent RO. We are proposing to locate the RO with the Regulatory Branch Offices within the Districts, because we believe it is critical for the ROs to maintain a high level of expertise and experience with local wetland and jurisdictional issues. Furthermore, the ROs could also administer the Corps Wetland Delineator Certification Program and conduct in-house supplemental training in jurisdictional determinations.

The proposed administrative appeals process for jurisdictional determinations would be initiated by the landowner filing a request for appeal (RFA). The appeal must be filed within 60 days of the issuance of a formal jurisdictional determination by the Corps. If work is authorized prior to the end of this 60 day period, either by general or individual permit, and a permittee wishes to request an appeal, the appeal must be filed and the appeal process completed prior to the commencement of any work in the area identified as waters of the U.S., or any work that could alter the hydrology of the waters. Unauthorized work may not be conducted to avoid regulatory jurisdiction over an area by alteration of its wetland characteristics.

The 60-day filing deadline is considered to provide adequate time for an appellant to submit an appeal. It is recognized, however, that in some cases data cannot be obtained in certain seasons or is complicated by disturbed site conditions. Under these circumstances, the appellant may include in the RFA a request for a time extension and provide reasons to support the request. The appeals Review Officer (RO) will consider the request and may grant a reasonable extension of time to enable the appellant to gather and submit additional data. The RO also has discretion to extend the time period for such circumstances to gather data or conduct research that is deemed necessary to reach a valid conclusion. We are proposing that, in such circumstances, the time for the total appeals process (from receipt of the RFA to the RO's decision on the merits of the appeal) will be completed as soon as possible but will not extend beyond twelve months from the date of receipt of the appellant's complete RFA. As an option to this twelve month maximum time frame, we are also seeking comments on establishing the maximum time frame for an extension at nine months.

The RO's evaluation process of the appeal includes a review of the appellant's RFA, supporting data, the Corps jurisdictional determination, and any other available data to determine if a site visit and/or any additional information is needed to complete the review. The RO will complete this review of the administrative record within 30 days of receipt of the appellant's complete RFA. If the RO determines that no additional data is required and that no site visit is necessary or requested by the appellant, a decision on the merits of the appeal will be made within 60 days after receipt of the complete RFA. If the RO

determines that additional data is needed, or if a site visit is necessary or requested, the RO will schedule the completion of this work at the earliest practicable time. The RO, or other designated Corps official, would then make a decision on the merits of the appeal within 30 days after the receipt of new information, completion of the site visit, or the collection of data. However, in no case shall the data collection or site visit extend the total appeals review time for the RO, or other designated Corps official, to make a decision on the merits of the appeal beyond twelve months after receipt of the RFA.

In completing the evaluation process, the District RO will either: (1) Determine that the appeal has no merit; (2) determine that the appeal has merit and notify the Corps regulatory official of the appropriate course of action to be taken; or (3) determine that the appeal has merit and revise the jurisdictional determination. The Corps jurisdictional determination resulting from the appeal will be considered the final Corps jurisdictional determination, unless the appellant submits an RFA to the Division RO as described below.

C. Second Level Appeal—Division Office

The Division Engineer, or designee, is responsible for the review of and decision on the second level appeal of jurisdictional determinations. The Division Engineer may retain or delegate either or both, the RO responsibilities and the appeals decision to the same or different Corps officials.

We expect that normally the ROs in the Division Office would be the same ROs that conduct the administrative appeal or permit denials which is described in more detail later. While these Division ROs would normally be a regulatory expert or have the support of a regulatory expert, they may have limited jurisdictional determination expertise. Depending on the jurisdiction issue raised and the expertise of the Division RO, the Division RO will obtain the assistance of experts from a District Office other than the District Office where the appeal was initiated.

The appellant may appeal the formal jurisdiction decision resulting from the first level appeal at the District Office by filing an RFA with the Division Office within 60 days of such final jurisdiction decision. Within 15 days of receipt of the RFA by the Division Office, the District Office will forward the administrative record of the jurisdictional determination to the Division RO. The administrative record will include any information provided by the appellant during the first level appeal.

The Division Office review will be limited to the administrative record prepared during the District Office appeal review. Therefore, the appellant must submit any relevant information at that time. The Division Office RO will reach a final decision on the administrative appeal within 60 days of receipt of the RFA.

In completing the evaluation process, the Division RO will either: (1) Determine that the appeal has no merit; or (2) determine that the appeal has merit and notify the Corps District regulatory official of the appropriate course of action to be taken. The Corps jurisdictional determination resulting from the second level appeal will be considered the final Corps jurisdictional determination.

D. Costs

Because of the variable scope of wetlands among Corps districts and developmental pressures on those wetlands, limited data is available to assess the potential cost of the administrative appeal program for wetland delineations and jurisdictional determinations. However, assuming that 10% of the approximately 35,000 jurisdictional determinations conducted annually by Corps Districts are appealed, and that the average costs associated with each appeal is $1200–1500 (Salary/travel/data collection), the annual cost of the program could range from $4.2–$5.25 million.

IV. Administrative Appeal of Permit Denials

The proposed rule provides permit applicants with an opportunity to seek a timely and objective reconsideration of an adverse permit decision in a non-judicial forum. Only a denial with prejudice of a Department of the Army permit application, or the applicant's rejection of a proffered permit containing special conditions that are unacceptable to an applicant and subsequently denied by the District Engineer, would be subject to the administrative appeal process. A denial with prejudice occurs when the permit is denied based upon the project's failing to meet public interest criteria and/or guidelines specified in Corps regulations (33 CFR Parts 320 through 330) and EPA regulation (40 CFR Part 230). Conversely, a denial without prejudice would not be subject to an administrative appeal, because such a denial is a *pro forma* action based on the applicant's failure to obtain requisite approval from another regulatory entity, and is not a Corps decision made on the merits of a completed public interest review and Section 404(b)(1) analysis. Further, if the applicant endorses and accepts a permit that is modified, conditional, and/or mitigated, the permit is not subject to an administrative appeal.

Additionally, the Corps of Engineers, through a separate rule-making proposal, will be proposing to make permit decisions within 90 days from the date of public notice for a proposed project, except for limited situations which preclude the Corps from making a decision due to other regulatory or legal requirements. As part of this rule-making proposal, we are seeking comments on whether the failure of the Corps to reach a permit decision within established deadlines should be viewed as a permit denial and subject to an administrative appeal.

The intent of this administrative appeal process is to provide a venue wherein the appellant will have an opportunity to have an independent evaluation conducted of the Corps' denial of a permit, including a proffered permit containing special conditions unacceptable to the applicant which is subsequently denied by the District Engineer.

Several options were considered for the identity of the permit denial Review Officer (RO) and the appeals decision-maker. An analysis of the options resulted in a determination that the Division Office could best meet the goals of providing an objective forum, ensuring the availability of well-qualified ROs, achieving an acceptable level of cost-effectiveness, promoting administrative efficiency, and providing the greatest access and convenience to appellants.

The need to ensure an impartial and objective review was considered to be the most important factor in implementing a valid administrative appeals process for permit denials. We believe this goal is attained by placing the review function at the Division level with the Division Engineer making the appeal decision rather than within Corps Districts. The Division RO would exercise a delegated authority to act on behalf of the Division Engineer, in conducting the administrative appeals process. The Division Engineer would make the decision on the merits of the appeal and direct the District Engineer to implement administrative appeal remedies or proceed with the permit denial. It is anticipated that Division RO candidates will likely be drawn from present Corps staff at HQ, Divisions, and Districts, and that they will represent the best trained and most experienced regulatory experts available.

The essence of the appeals process is an independent analysis of the existing administrative record to ensure that the district's decision complies with legal, regulatory, and policy requirements, that omissions of material facts have not occurred, and that the record is sufficient to support conclusions of the permit decision that was made. The process provides for a review conference at which Corps personnel and the applicant, authorized agent, and/or consultant may meet with the Division RO to provide clarification of information in the administrative record. The record may not, however, be supplemented by new data since this would constitute an amended application that may initiate a new public interest review rather than an appeal of the existing record and decision. Further, in reviewing technical issues, Division Engineers will not substitute their judgment for that of the District Engineers unless the issue falls within the ''clearly erroneous or omission of material fact'' category.

Under the proposed rule concerning permit denials, the Division Engineer's determination will not constitute a final agency decision; but would conclude with a finding that would be sent to the District Engineer whose decision was being appealed. This finding would either: (1) Determine that the appeal has no merit; or (2) determine that the appeal has merit and notify the District Engineer of further analysis and evaluation needed before the District Engineer can make the final agency decision on the permit application.

The re-opening of the public interest review and 404(b)(1) Guidelines analysis may be a limited review, if the noted deficiencies are narrow in scope and impact. The supplemental review process will include notice to all parties who commented on or participated in the original review. However, if the noted deficiencies are substantial in scope and impact, the issuance of a new public notice, opportunity to request a public hearing, and preparation of a supplemental environmental analysis and decision document may be required (see 33 CFR 325.7). This would allow new interested parties an opportunity to offer their views for the District Engineer's reconsideration of the permit application.

Upon conclusion of the re-evaluation, if the District Engineer determines that the proposed action is contrary to the public interest and/or 404(b)(1) Guidelines, the original denial will be reaffirmed and the decision will not be subject to further administrative appeal. Further challenge must be through the judicial process. If the re-evaluation results in a determination that a permit should be issued, that decision will be based on a supplemental administrative record and with the benefit of additional input from all interested parties. Furthermore, the determination to issue a permit may be subject to the 404(q) elevation process, but is not open to further administrative appeals.

Additionally, as discussed above, an appeal could be initiated for a decision to issue a permit with special condition(s) that the applicant finds unacceptable, and thus refuses to accept the permit. However, if the administrative appeal of a permit decision was sought by an applicant because of special conditions the applicant considered unacceptable, the applicant is appealing the permit decision, not just the special condition(s) of the proffered permit. The District Engineer, when evaluating the permit decision for a proffered permit that was not accepted by an applicant, will decide, upon further evaluation, either to: (1) Reaffirm the decision to deny the permit; or (2) issue the permit with special condition(s) different from those in the original proffered decision. Appellants must be aware, therefore, that the rejection of a proffered permit would not result in a simple ''yes'' or ''no'' on the merits of a special condition(s). Rather, the entire decision making process is opened for consideration of public interest review criteria and 404(b)(1) Guidelines analysis by the DE in reaching a final permit decision. Furthermore, a decision that has undergone a reevaluation as directed by the Division Engineer can not be further administratively appealed.

Based on past regulatory program experience, it is reasonable to estimate that annually 250 permit denials may be appealed under the proposed rule. To accommodate this increased work effort, it would be necessary to establish one to two RO positions in each of the ten Corps Divisions to implement the administrative appeals process. It is estimated that the resulting annual expense would be $2.5 million. These costs include:

20 ROs	$1,840,000
RO's travel & per diem/per appeal ($750×250)	187,500
Additional travel & per diem for Corps staff ($400×250)	100,000
supplemental Public Notice and Additional District Office Review of Appeals (250 cases at $1,500)	375,000
Total	2,502,500

V. Third Party Appeals

An ideal administrative appeal regulation for some people would be one that allows all third parties to request an administrative appeal of jurisdictional determinations and permit decisions. We understand this position. However, such a program would be much more expensive and require many more people to administer than that contemplated in this proposal. Congress is considering appropriating a small budget increase to allow the Corps to implement the proposed administrative appeal process. It appears unlikely that Congress would fund the costs of an expanded administrative appeals process, the benefits of which we do not believe would justify the costs. While this regulation would not allow third party appeals, it does provide for third party input in permit denial cases where the District Engineer is reconsidering the permit denial, as discussed below.

Under the proposed rule, the applicant or the landowner, is the only individual who may initiate an appeal of a formal jurisdictional determination. In proposing this rule the Corps recognizes that there may be other parties having an interest in a jurisdictional determination. However, these interests are not the primary property interests. Third party appeals related to such secondary property interests could raise a number of property rights issues. Third party involvement would reduce the efficiency of the process since third parties are not likely to readily obtain the permission of landowners to enter onto the property to conduct the technical, on-site surveys that are critical to validate jurisdictional determinations, including wetland delineations. Further, if the Corps determines that an area is a geographic area subject to Corps regulatory authority, substantial development proposals would likely trigger permit requirements and provide third parties with an opportunity to participate through the public interest review process.

Under the proposed rule, the applicant is the only individual who may initiate an appeal of a permit decision. However, full participation by third parties is provided for in the appeal process if the Division Engineer's determination is to refer the file back to the District Engineer for re-evaluation. It was determined that it was not necessary to provide for third party participation in the RO's permit review conference, since third parties had an ample opportunity to provide comments

or concerns and submit substantive evidence during the public notice phase of the permit evaluation process and again to provide comments if the District Engineer is reconsidering the application because the Division Engineer determines that the appeal had merit. Further, the President's plan did not contemplate nor recommend the administrative appeal of permit issuances. These decisions are considered valid reflections of the public interest since they have already undergone rigorous review, with input from numerous agencies and the general public, and these decisions may be elevated by some Federal agencies pursuant to Section 404(q) Memorandum of Agreement. Expanding the appeal process to permit issuance decisions would also significantly expand the potential number of appeals since the Corps annually issues approximately 10,000 standard permits nationwide. Opening these decisions to administrative challenge would have severe adverse effects on the overall efficiency and cost of the regulatory program. Furthermore, judicial review is available to affected third parties.

VI. Unauthorized Activities

As a general rule, jurisdictional determinations made in the context of an enforcement case can not be administratively appealed under this rule. We are concerned that the public interest in expeditious and efficient resolution of an enforcement action should not ordinarily be delayed by administrative appeals of jurisdictional determinations made for purposes of that enforcement action. However, the District Engineer, in his or her discretion, is authorized by this rule to make exceptions to this general rule, and to allow the administrative appeal of a jurisdiction determination made in the context of an enforcement action if the District Engineer believes that the interests of justice, fairness, and administrative efficiency would be served thereby.

In certain cases involving unauthorized activities, the Corps will afford the responsible party the opportunity to apply for an after-the-fact permit. In many instances this approach obviates the need for a formal enforcement action and expedites the restoration of the affected wetland. The use of this after-the-fact permit approach can, however, be affected by statute of limitations complications. Further, engaging in an Administrative Appeal regarding an activity involving an enforcement case might raise issues regarding application of Statute of Limitations with respect to potential enforcement actions.

Consequently, we propose to amend 33 CFR 326.3(e) to include a new subparagraph (v). This new provision would require those parties alleged to have engaged in an unauthorized activity to sign a statute of limitations tolling agreement prior to filing an after-the-fact permit application. Subsequent to acceptance of an after-the-fact permit application by the Corps, an applicant may appeal a jurisdiction determination and/or a denial of an after-the-fact permit. Such tolling agreement would state that, in exchange for the Corps' considering the appeal of a jurisdictional determination or the after-the-fact permit application, or both, the party would agree that the statute of limitations would be tolled until one year after the final action has been taken on a jurisdictional determination appeal or the after-the-fact permit decision has been made (whichever is later), or one year after any succeeding administrative appeal of an after-the-fact permit decision has been finalized. Such tolling agreement would also state that permit applicants will not raise a statute of limitations defense in any subsequent enforcement action brought by the United States, with respect to the unauthorized activity for the period of time in which the statute of limitations is tolled. A party should only be required to sign one tolling agreement regardless of the number of appeals sought involving a single unauthorized activity. For example, a party sings a tolling agreement to appeal a jurisdictional determination, then applies for and receives an after-the-fact permit decision, and then appeals the permit decision, the tolling agreement will remain in effect until one year after the date that the after-the-fact permit decision has been made final.

Although we are planning to consolidate and propose revisions to the Corps Regulatory Program Regulations at 33 CFR Parts 320–330, within the next year, it is important that we make this minor amendment in conjunction with this proposed rule on administrative appeals to avoid creating undue confusion among the regulated community. This confusion would stem from the fact that, even if we were to make the proposed change to subparagraph (v), we would still have to include a provision in the administrative appeals regulation requiring that every applicant who applies for an after-the-fact permit prior to the effective date of subparagraph (v), sign a tolling agreement prior to filing an administrative appeal. This provision is necessary to address those parties that apply for after-the-fact permits between now and the effective date of subparagraph (v). If we were to wait until we revise 33 CFR Parts 320–330 to propose subparagraph (v), then this group of after-the-fact permit applicants would only increase in number, further contributing to the confusion that this provision could create.

VII. Exhaustion of Administrative Remedies

In *Darby* v. *Cisneros*, 113 S.Ct. 2539 (1993), the Supreme Court recently held that persons subject to Federal agency regulation need not exhaust administrative remedies before filing a lawsuit in Federal District Court, unless a statutory or regulatory provision requires such exhaustion. In response to *Darby* v. *Cisneros*, the Corps is including § 331.12 in this proposed rule to make it explicit that persons dissatisfied with jurisdictional determinations or permit decisions must avail themselves of the administrative appeals process(es) proposed in this rule and received a final agency decision prior to seeking redress in the Federal courts.

VIII. Application of Rule to Prior Regulatory Decisions

We are proposing that when the final administrative appeals process is adopted that certain actions completed prior to the effective date of the final regulation be allowed to be appealed in accordance with this regulation. We believe that it would be appropriate to accept administrative appeals of final jurisdictional determinations and permit denials, that were transmitted in writing to an affected party one year prior to the effective date of the final regulation, if the affected party submits a request for appeal (RFA) to the Corps within 60 days of the effective date of the final rule.

It should be noted by potential appellants of prior regulatory decisions that the criteria for appeal must be met, or the request for appeal will be rejected by the Corps. Additionally, if large numbers of RFAs are received under this provision, an RO may delay the initiation of processing an RFA for up to 6 months after the implementation date of these regulations, if necessary.

IX. Environmental Documentation

We have made a preliminary determination that this action does not constitute a major Federal action significantly affecting the quality of the human environment, because the Corps prepares appropriate environmental documentation, including an Environmental Impact Statement (EIS)

when required, for all permit decisions. Furthermore, wetland delineations and jurisdictional determinations do not result in an applicant or landowner being able to conduct work in waters of the United States without a required permit authorization, but only describe and determine the scope and extent of waters of the United States under Corps regulatory jurisdiction based on technical criteria that is established separately. Therefore, environmental documentation under the National Environmental Policy Act (NEPA) is not required for those actions. Moreover, this proposed regulation for administrative appeals only adds an optional one-level review to permit denials, to insure that applicable regulations, policies, practices, and procedures (including the preparation of appropriate environmental documentation) have been appropriately followed.

X. Executive Order 12291 and the Regulatory Flexibility Act

The Corps does not believe that this proposed regulation meets the definition of a major rule under Executive Order 12291, and we therefore do not believe a regulatory impact analysis is required. This proposed rule should reduce the burden on the public by offering an administrative appeal process for certain Corps decisions, and in many instances, should avoid the more time consuming and costly alternative of appealing a decision under judicial review.

We also do not believe that this proposed regulation will have a significant impact on a substantial number of small entities pursuant to Section 605(b) of the Regulatory Flexibility Act of 1980, because this proposed regulation only creates an optional review of certain decisions through an administrative appeal process. The proposed rule should be less time consuming and less costly to permit applicants who want to appeal a decision with which they disagree, but currently can only seek an appeal through the judicial system. Furthermore, since the administrative appeal would be optional at the applicant's or landowner's discretion, we have minimized the potential of any increased regulatory burden on small entities. If an applicant or landowner chooses to forego an appeal, the net effect of the proposed regulation would be zero.

Note 1.—The term ''he'' and its derivatives used in these regulations are generic and should be considered as applying to both male and female.

List of Subjects

33 CFR Part 320

Environmental protection, Intergovernmental relations, Navigation, Water pollution control, Waterways.

33 CFR Part 326

Investigations, Intergovernmental relations, Law enforcement, Navigation, Water pollution control, Waterways.

33 CFR Part 331

Administrative appeal, Navigation, Waterways, Environmental protection, Water pollution control.

John H. Zirschky,

Acting Assistant Secretary of the Army (Civil Works), Department of the Army.

Accordingly, 33 CFR Parts 320 and 326 are proposed to be amended and 33 CFR Part 331 is proposed to be added as follows:

PART 320—GENERAL REGULATORY POLICIES

1. The authority citation for Part 320 continues to read as follows:

Authority: 33 U.S.C. 401 et seq.; 33 U.S.C. 1344; 33 U.S.C. 1413.

2. Section 320.1(a)(2) is amended by revising the final sentence to read as set forth below.

§ 320.1 Purpose and scope.

* * * * *

(a)(2) * * * A district engineer decision to deny a permit or a Corps jurisdictional determination is subject to an administrative appeal by the landowner or permit applicant in accordance with the procedures and authorities contained in 33 CFR Part 331. Such administrative appeal must meet the criteria in 33 CFR 331.5; otherwise there is no administrative appeal of that decision. An applicant or landowner must exhaust any administrative appeal available pursuant to the 33 CFR Part 331 and receive a final agency decision prior to filing suit in Federal District Court.

PART 326—ENFORCEMENT

1. The authority citation for Part 326 continues to read as follows:

Authority: 33 U.S.C. 401 et seq.; 33 U.S.C. 1344; 33 U.S.C. 1413.

2. Section 326.3(e) is amended by adding a new paragraph (e)(1)(v) to read as follows:

§ 326.3 Unauthorized activities.

* * * * *

(e) * * *

(1) * * *

(v) No permit application will be accepted unless and until the applicant has furnished a signed statute of limitations tolling agreement to the district engineer. A single statute of limitations tolling agreement will be prepared for each unauthorized activity. Such agreement will state that in exchange for the Corps' acceptance of any after-the-fact permit application and/or any administrative appeal associated with the unauthorized activity, the responsible party agrees that the statute of limitations will be tolled until one year after the final after-the-fact permit decision or, if there is an administrative appeal, one year after the final agency decision as defined at 33 CFR 331.9, which ever is later.

Part 331 is added to read as follows:

PART 331—ADMINISTRATIVE APPEALS PROCESS

Sec.

331.1 Purpose and policy.
331.2 Definitions.
331.3 Review officers.
331.4 Notification of appealable actions.
331.5 Criteria.
331.6 Filing appeals.
331.7 Review procedures.
331.8 Timeframes for appeals decisions.
331.9 Final appeals decisions.
331.10 Final agency decisions.
331.11 Unauthorized activities.
331.12 Exhaustion of administrative remedies.

Authority: 33 U.S.C. 401 et seq., 1344, and 1413.

§ 331.1 Purpose and policy.

(a) *General.* The purpose of this regulation is to establish administrative appeals policies and procedures for final Corps of Engineers geographic jurisdictional determinations and permit denials with prejudice. The appeals process will allow landowners and permit applicants to pursue an administrative appeal of a final Corps of Engineers decision or determination with which they disagree. The basis for an appeal and the specific policies and procedures of the appeals process are described in the following sections. It shall be the policy of the Corps of Engineers to promote and maintain an administrative appeals process that is independent and objective, fair and equitable, and efficient and cost-effective.

(b) *Jurisdictional determinations.* Under the Corps of Engineers regulatory program, landowners and permit applicants may request, and/or receive, final Corps jurisdictional determinations to determine the presence and extent of wetlands, scope and extent of other waters of the United States, and whether the property or

waterbody is subject to Department of the Army jurisdiction. Therefore, such geographic jurisdictional determinations are vitally important decisions to landowners and permit applicants. These decisions affect whether or not the Corps has regulatory jurisdiction, and whether a permit is required for work involving regulated discharges and activities. The administrative appeal process shall apply to these decisions.

(c) *Permit denials.* Permit decisions that result in denial with prejudice may be appealed under the administrative appeal process.

§ 331.2 Definitions.

The terms and definitions found in 33 CFR Parts 320 through 330 are applicable to this regulation. In addition, the following terms are defined for the purposes of this Part:

(a) *Jurisdictional determination* means a written Corps determination that a wetland (as determined and defined by a wetland delineation) and/or waterbody is subject to regulatory jurisdiction under section 404 of the Clean Water Act or a written Corps determination that a waterbody is subject to regulatory jurisdiction under sections 9 and 10 of the Rivers and Harbors Act of 1899. Additionally, the term includes a written reverification of expired jurisdictional determinations and a written reverification of jurisdictional determinations where new information has become available that may affect the previous written determination. For example, such geographic jurisdictional determinations may include, but are not limited to, one or more of the following determinations: presence/absence of wetlands, wetland/upland boundary, ordinary high water mark, mean high water mark, high tide line, interstate commerce nexus for isolated waters, and adjacency of wetlands to a waterbody. All jurisdictional determinations will be in writing and will be identified as either preliminary or final jurisdictional determinations. Some office, or preliminary, jurisdictional determinations are provided to applicants or landowners, generally to indicate the presence or absence of wetlands or waterbodies. They are advisory in nature and may not be appealed. Final jurisdictional determinations will be provided in writing and will be certified as a final jurisdictional determination and may be appealed.

(b) *Wetland delineation* means a Corps of Engineers (Corps) delineation, or verification of a delineation submitted by an applicant or consultant, indicating the size and boundaries of a subject property that is a wetland in accordance with the current Federal manual for identifying and delineating wetlands (FDM). Additionally, the term includes reverification of expired wetland delineations and reverification of wetland delineations where new information has become available that may affect the final delineation.

(c) *Permit denial* means a written Corps denial with prejudice (see 33 CFR 320.4(j)) of an individual standard permit as defined in 33 CFR 325.5(b). Permit denials also include cases where a proffered individual permit is refused by the applicant in writing because the applicant objects to the terms or special conditions of the proffered permit and the permit is subsequently denied with prejudice by the District Engineer. If the applicant refuses a proffered general permit, the District Engineer will not deny a permit for the proposed project based on that refusal. The applicant must apply for an individual permit. If that individual permit is subsequently denied with prejudice, then the applicant may request an appeal of that denial.

(d) *Appealable action* means a written final jurisdictional determination or permit denial as those terms are defined in paragraphs (a) and (c) of this section.

(e) *Affected party* means a permit applicant or landowner (i.e., an individual who has an identifiable and substantial legal interest in the property) that has received a final jurisdictional determination, or permit denial as those terms are defined in paragraphs (a) and (c) of this section.

(f) *Appellant* means an affected party who has filed an appeal under the criteria and procedures of these regulations.

(g) *Review officer (RO)* means the Corps of Engineers agency official responsible for the review and final decision on the merits of an appeal or review and recommendation to the Corps agency official making the final decision on the merits of an appeal. The RO, and/or the appeals decision-maker, is the District Engineer, or the Division Engineer as appropriate, or their designee(s).

(h) *Notification of appeals process (NAP)* means the information fact sheet which explains the administrative appeals process, criteria, and procedures. The NAP will accompany all final wetland delineations, jurisdictional determinations, and permit denials, as these terms are defined herein.

(i) *Request for appeal (RFA)* means the affected party's official request to appeal an appealable action with which he disagrees. The RFA will include required information to identify the affected party, proposed project, reason(s) for the appeal, and any supporting data and information. The format and required information of the RFA will be provided to the affected party at the time of notification of appeals process. The affected party initiates the administrative appeals process by completing and returning the RFA to the appropriate Corps of Engineers office.

§ 331.3 Review officers.

(a) *Authority.* The District Engineer, or the Division Engineer as appropriate, has the authority and responsibility for administering a fair, reasonable, and effective administrative appeal process. The District Engineer, or the Division Engineer as appropriate, may act as the RO or may delegate, either generically or on a case-by-case basis, any authority or responsibility described in this Part as that of the RO. However, the District Engineer, or the Division Engineer as appropriate, may not delegate any authority or responsibility described in this Part as that of the District Engineer, or the Division Engineer, respectively. Regardless of any delegation of RO authority or responsibility, the District Engineer or the Division Engineer as appropriate, retains overall responsibility for the administrative appeal process.

(1) *Jurisdiction determinations.* The District and Division ROs have the authority to make a decision on the merits of the appeal. Furthermore, the District RO has the discretion to make a new jurisdiction determination.

(2) *Permits denials.* The RO will prepare an analysis and recommendation for the Division Engineer. The Division Engineer has the authority to make the final decision on the merits of the appeal. Under the appeal process, neither the RO nor the Division Engineer has the authority to make a final decision to issue or deny any particular permit. The authority to issue or deny permits remains with the District Engineer. However, the Division Engineer may exercise the authority at § 325.8(c) to elevate the permit case and then may make the final permit decision.

(b) *General.* (1) *Independence.* The ROs shall be located in the Corps Division and District regulatory offices, unless specifically appointed as described in paragraphs (b), (c) and (d) of this section. The ROs will not perform or have been involved with the preparation, review, or decision making of the action being appealed. During the appeal process, the ROs shall maintain independence and objectivity in their

review of an appeal case and when determining the merits of the appeal.

(2) *Review.* The RO will conduct an independent analysis of the existing administrative record to ensure that the district's decision complies with legal, regulatory, and policy requirements, that omissions of material facts have not occurred, and that the record is sufficient to support conclusions and the ultimate decision. The District RO has the discretion to gather additional information when deemed necessary. When reviewing technical issues, Division RO's shall not substitute their judgment for that of the Corps district unless the reviewed decision was clearly erroneous or omitted a material fact. An RO who lacks specific expertise with regard to a specific appealed issue will obtain the assistance of another RO or other recognized expert from an office outside the Regulatory Branch or from a District other than the District where the appeal was initiated.

(c) *Jurisdictional determinations.* (1) *District RO.* The Corps district RO shall be, or have the support of, a recognized expert with extensive experience in conducting and reviewing wetland delineations and performing and reviewing jurisdictional determinations. The district RO shall report directly to the Regulatory Branch Chief. This arrangement will insure that the district RO is removed from day-to-day involvement in routine jurisdictional determinations made by Regulatory Branch project managers, unit chiefs, and section chiefs. For any case where the jurisdictional determination was made by the Regulatory Branch Chief or higher authority, or the individual(s) who normally acts as the district RO has participated in the decision or otherwise advised the decision-maker, or at the District Engineer's discretion, the District Engineer or a Corps official at least one level higher than the decision-maker shall appoint a qualified independent RO to conduct the appeal process.

(2) *Division RO.* The division RO responsible for appeals of a district RO's decision shall generally be the same RO(s) that is responsible for appeals of permit denials described in paragraph (d) of the section.

(d) *Permit denials.* The ROs responsible for appeals involving permit denials shall be officials in Division regulatory offices with extensive knowledge of all aspects of the Corps regulatory program. For any case where the permit decision was made by the Division Engineer or higher authority, an agency official at least one level higher than the decision-maker shall appoint a qualified independent RO to conduct the appeal process.

§ 331.4 Notification of appealable actions.

Every final jurisdictional determination and permit denial must be provided in writing to the affected party. For permit denials, the notification will also include a copy of the decision document. Additionally, an affected party has the right to review and obtain copies of the administrative record. Each notification letter will include a NAP and an RFA.

§ 331.5 Criteria.

(a) *Criteria for appeal.* The reason(s) or basis(es) for requesting the appeal must be specifically stated and must be more than a simple request for appeal because the affected party did not like the decision. Examples of reasons or bases for appeals include, but are not limited to, the following: a procedural error, an incorrect application of policy or regulations, omission of material fact, incorrect application of Federal Wetland delineation manual, lack of interstate commerce nexus, incorrect application of 404(b)(1) Guidelines under the Clean Water Act, or use of incorrect data.

(b) *Actions not appealable.* An action or decision is not subject to an administrative appeal under these regulations if it falls into one or more of the following categories:

(1) a jurisdictional determination associated with an individual permit (including an individual permit with special conditions), or the permit itself, where the permit has been accepted and signed by the permittee;

(2) any site specific matter that has been the subject of a final judicial decision; or

(3) a final agency decision that has resulted from additional analysis and evaluation, as directed by a final appeal decision.

(4) any matter than can not be controlled or changed by the Corps decision-maker (e.g., The requirement of a binding statute, regulation, state Section 401 water quality certification, etc.)

§ 331.6 Filing appeals.

An affected party must file an RFA that is received by the Corps within 60 days from the date of the letter notifying the affected party of the appealable action. In any case where work is authorized to commence prior to the end of this 60 day period, either by general or individual permit, and the permittee wishes to request an appeal, the appeal must be received by the Corps and the appeal process concluded prior to the commencement of any work in the area identified as waters of the United States, and prior to any work that could alter the hydrology of waters of the United States. Additionally, the affected party must grant a right of entry to the RO to inspect the property and to conduct appropriate field tests and sampling that the RO determines may be necessary.

§ 331.7 Review procedures.

(a) *General.* (1) *Jurisdiction determinations.* The administrative appeals process for jurisdiction determinations is a two level appeal process. The first level appeal is to a specialist review officer in a Corps district office. The landowner will be able to present information to the RO, or the RO may obtain information, for the administrative record. The second level appeal is to an RO in a Corps Division office. This review will be limited to the administrative record developed during the first level appeal, which would include any information provided by the landowner as part of that record.

(2) *Permit denials.* The administrative appeals process for permit denials is a one level appeal process to the Division Engineer. The appeals process will be conducted by a RO in the Division office. The division RO will prepare the record, an analysis, and a recommendation for the Division Engineer. The Division Engineer may participate in the appeals process as the Division Engineer deems appropriate. The Division Engineer will make the decision on the merits of the appeal.

(b) *Acceptance of the request for appeal.* Within 30 days after receipt of the RFA, the RO shall review the appellant's RFA and the administrative record. If, within this 30 day period, the RO determines that the RFA does not meet the criteria for appeal (see § 331.5), the RO will notify the appellant in writing by certified mail of this determination and the reason(s) why the appeal failed to meet applicable criteria. No further administrative appeal is available, unless within 30 days from his receipt of the letter refusing his appeal, the appellant can refute the reason(s) for failing the criteria for appeal. The appellant may submit a revised RFA, if the reason(s) for failing applicable criteria have been remedied and the revised RFA is received by the Corps within 30 days from the date the appellant received notification that the original RFA failed to meet the criteria for appeal. If the RO determines that the revised RFA still does not meet the criteria for appeal, the RO will notify the appellant in writing of that fact by certified mail within 30 days advising

the appellant that the matter can not be appealed.

(c) *Site visits.* If within 30 days from receipt of the RFA the RO determines that additional field data and sampling are necessary, or if the appellant requests a site visit, the RO will conduct a site visit. The RO has the discretion to conduct a site visit, except when the applicant requests one, in which case a site visit shall be conducted. The appellant, or the appellant's authorized agent, must participate in the site visit if he has requested that one be conducted. If a site visit is conducted, the RO will schedule the completion of the site visit at the earliest practicable time. When practicable the site visit should be scheduled in conjunction with the review conference or meeting, if one is held. Site visits will not be conducted by Division ROs for appeals of District RO decisions on jurisdiction determinations.

(d) *Meetings and conferences*—(1) *Jurisdictional determinations meetings.* The District RO may schedule a meeting with the appellant, his or her authorized agent, or both, and appropriate Corps regulatory personnel to review and discuss issues directly related to the appeal. Additionally, the appellant may request that such a review meeting be held. However, the final decision on whether to conduct a review meeting shall be at the discretion of the District RO. If a meeting is held, the appellant will bear his or her own costs associated with necessary arrangements, exhibits, travel, and representatives. The Division RO will not conduct any jurisdictional determination meetings or discussions with any party, including the District RO.

(2) *Permit denial conferences.* An appeal review conference (conference) will be held for every permit denial appeal, unless the RO and the appellant mutually agree to forego a conference. When held, the conference will take place within 60 days of receipt of an acceptable RFA, unless the RO determines that unforeseen or unusual circumstances require scheduling the conference for a later date. The conference will be governed by the following:

(i) *Notification.* The RO will set a date, time, and location for the conference and notify in writing the appellant and the Corps District regulatory office within 30 days of receipt of the RFA.

(ii) *Facilities.* The conference will be held at a location that has suitable facilities and that is reasonably convenient to the appellant, preferably in the proximity of the project site. Where public facilities are available at no expense, these facilities are preferred. If a free facility is not available, the charges for the facility will be borne by the Corps District regulatory office.

(iii) *Participants.* The RO, appellant, the appellant's authorized agent or consultant, and the Corps District staff are authorized participants in the conference. The Division Engineer and/or the District Engineer may choose to attend or not to attend at their discretion. If the appellant does not attend the conference, the appeals process is terminated with prejudice, unless the RO excuses the appellant for a justifiable reason. Furthermore, should the process be terminated with prejudice, the original permit denial decision shall be sustained.

(iv) *The role of the RO.* The RO shall be in charge of conducting the conference. He shall open the conference with a summary of the policies and procedures for conducting the conference as described in these regulations. The RO's responsibilities are to conduct a fair and impartial conference, to hear and fully consider all relevant issues and facts, and to clarify any matters necessary to make a final determination on the merits of the appeal.

(v) *Appellant rights.* The appellant, or the appellant's authorized agent, will be given a reasonable opportunity to present the appellant's views regarding the subject permit denial.

(vi) *Subject matter.* The conference will be limited to matters contained within the existing administrative record. The RO may ask the Corps District representatives or the appellant to respond regarding particular matters of the relevant record, regarding the appellant's assertions or exhibits, or to clarify elements in the administrative record. New issues may not be raised or discussed.

(vii) *Testimony and transcripts.* There will be no sworn testimony and no cross examination during the conference. The RO may tape-record and/or have a transcript prepared of the conference. The tape and/or transcript is for use by the RO to review the proceeding of the conference and to assist in the preparation of the RO's findings. A tape-recording or transcript is optional, at the RO's discretion. However, if none is planned or requested by the RO, the appellant may contract and bear the expense for such a record if so desired. Any tape or transcript would become part of the administrative record of the appeal process and must be made available to all parties upon request.

(viii) *Appellant costs.* The appellant will bear his own costs associated with necessary arrangements, exhibits, travel, and consultants.

(e) The appeal of a District jurisdictional determination to the Division office will be limited to the administrative record. The RFA will be accepted upon receipt by the appropriate Division office. The Division RO will base the appeal decision on the administrative record provided by the District office. Therefore, the appellant must provide to the District office all relevant information to be entered into the administrative record during the District jurisdictional determination appeal. The Division RO will not meet or have conversations with any interested party, including the District RO or Corps District personnel, the appellant or the appellant's agent, regarding this matter.

§ 331.8 Timeframes for final appeals decisions.

The Corps will make a final decision on the merits of the appeal at the earliest practicable time in accordance with the time limits set forth in the following paragraphs.

(a) *Jurisdictional determination appeals.*

(1) *District level appeal.*

(i) *Normal timeframe.* If the RFA meets the criteria for appeal and the District RO determines that a site visit is not necessary, the District RO, or designated Corps official, will make a final decision on the merits of the appeal within 60 days from receipt of the RFA, or the revised RFA, except as provided in paragraphs (a)(1)(ii) and (a)(1)(iii) of this section.

(ii) *Extenuating circumstances.* If extenuating circumstances are present at the site that preclude the appellant and/or the District RO from conducting the site visit or gathering necessary information, the District RO may grant a time extension. Examples of extenuating circumstances may include seasonal hydrology conditions, winter weather, or disturbed site conditions. However, in no case shall the data collection or site visit period extend the total appeals review process beyond twelve months from the date of receipt of the RFA. If a time extension is granted for information and data gathering, the District RO will notify the appellant in writing. The District RO will complete the appeals review and make a final decision within 30 days of the site visit or data collection time extension period.

(iii) *New information.* During the course of the appeals review, the appellant may present new information not available at the time the appeal was submitted. The District RO, at the

District RO's discretion, may extend the time period for making the final decision to 30 days beyond the date of receipt of additional information submitted by the appellant, unless conditions as described in paragraph (a)(1)(ii) of this section exist.

(2) *Division level appeal.* The Division RO, or designated Corps official, will make a final decision on the merits of the appeal within 60 days of receipt of the RFA.

(b) *Permit denials.* The Division Engineer will make a final decision on the merits of the appeal within 90 days of receipt of the RFA, or the revised RFA.

§ 331.9 Final appeals decisions.

(a) In accordance with the authorities contained in § 331.3(b), the Corps appeal decision will either:

(1) determine that the appeal has no merit;

(2) determine that the appeal has merit; or

(3) for jurisdictional determinations only, at the District level the RO, or designated Corps official, may determine that the appeal has merit and revise the jurisdictional determination.

(b) The Corps will document the appeal decision, addressing the conclusions reached on the merits of the appellant's appeal. If the Corps determines that the appeal has merit (paragraph (b)(2) above), the RO will notify the district of further analysis and evaluation needed before the district can make a final agency decision. The RO will notify the appellant and the appropriate Corps office of the final appeal decision on the merits of the appeal in writing. The appellant will be notified by certified mail.

(c) The final appeal decision of the Division RO, the designated Corps official, or the Division Engineer, as appropriate, concludes the administrative appeal process and will be included in the administrative records. There is no further administrative appeal of the appealable action.

§ 331.10 Final agency decisions.

(a) *Jurisdictional Determinations.* The final agency decision on a jurisdictional determination that has been appealed will be made by one of the following methods:

(1) If the Division RO, or designated Corps official, determines that the appeal has no merit, then the final agency decision is the original jurisdiction determination or a District RO, or designated Corps official, corrected jurisdiction determination, as appropriate; or

(2) If the Division RO, or designated Corps official, determines that the appeal has merit, the Division RO, or designated Corps official, will provide direction to the original decision-maker or the District RO, as appropriate, to complete the administrative record and/or further analyze or evaluate specific issues. Subsequently, the final agency decision is the final jurisdictional determination made pursuant to the Division RO's, or designated Corps official's appeal decision; or

(3) If the appellant accepts the agency decision based on the District RO's, or designated Corps official's appeal decision (see § 331.9) or does not appeal to the Division Engineer, then that decision becomes the final agency decision. However, in such cases, the appellant has acted without exhausting all the administrative remedies under this rule. (See § 331.12).

(b) *Permit denials.* The final agency decision on a permit denial that has been appealed will be made by one of the following methods:

(1) If the Division Engineer determines that the appeal has no merit, the final agency decision is the District Engineer's denial decision; or

(2) If the Division Engineer determines that the appeal has merit, the Division Engineer will provide direction to the District Engineer to complete the administrative record and/or further analyze or evaluate specific issues. Subsequently, the final agency decision is the District Engineer's final decision made pursuant to the Division Engineer's appeal decision.

§ 331.11 Unauthorized activities.

Jurisdictional determinations and permit denials associated with after-the-fact permit applications are appealable actions for the purposes of these regulations. If the Corps accepts an after-the-fact permit application, an administrative appeal of a jurisdictional determination and/or a permit denial may be filed and processed in accordance with these regulations subject to the provisions of paragraphs (a), (b), and (c) of this section. An appeal of jurisdictional determinations associated with unauthorized activities will normally not be accepted unless the Corps accepts an after-the-fact permit application. However, in rare cases, the District Engineer may accept an appeal of such a jurisdictional determination, if the District Engineer determines that the interests of justice, fairness, and administrative efficiency would be served thereby.

(a) *Initial corrective measures.* If the District Engineer determines that initial corrective measures are necessary pursuant to 33 CFR 326.3(d), an RFA for an appealable action will not be accepted by the Corps, until the initial corrective measures have been completed.

(b) *Penalties.* If an affected party requests, under this Section, an administrative appeal of an appealable action prior to the resolution of the unauthorized activity and the RO determines that the appeal has no merit, the responsible party remains subject to any civil, criminal, and administrative penalties as provided by law. Any penalty imposed, as determined in the appropriate forum by the appropriate decision-maker, may also include in the calculation of penalty the time period involving the appeal process.

(c) *Tolling of statute of limitations.* The RFA associated with unauthorized activities must include a signed statute of limitations tolling agreement. (See 33 CFR 326.3(e)(1)(v).) No administrative appeal will be accepted until such agreement is furnished to the district engineer.

§ 331.12 Exhaustion of administrative remedies.

Applicants or landowners may not file a legal action in Federal District Court challenging a jurisdiction determination or a permit denial until after a final agency decision has been made on the permit application (i.e., permit issuance or denial) and the appellant has exhausted all applicable administrative remedies under this Part. If an appellant is challenging a permit denial, the appellant exhausts all administrative remedies when a final agency decision is made in accordance with § 331.10(b).

Gregory D. Showalter,

Army Federal Register Liaison Officer.

[FR Doc. 95–17311 Filed 7–18–95; 8:45 am]

BILLING CODE 3710–92–M

federal register

Wednesday
July 19, 1995

Part IV

Department of Defense

General Services Administration

National Aeronautics and Space Administration

48 CFR Ch. I

Federal Acquisition Regulation; Shortening Comment Period; Final Rule

DEPARTMENT OF DEFENSE

GENERAL SERVICES ADMINISTRATION

NATIONAL AERONAUTICS AND SPACE ADMINISTRATION

48 CFR Chapter 1

[FAC 90–29; FAR Cases 91–104 and 94–770]

Federal Acquisition Regulation; Shortening Comment Period

AGENCIES: Department of Defense (DOD), General Services Administration (GSA), and National Aeronautics and Space Administration (NASA).

ACTION: Federal Acquisition Circular 90–29; Shortening Comment Period.

SUMMARY: On July 3, 1995, FAC 90–29, consisting of three rules, was published in the **Federal Register**. This notice advises the public that the public comment period on FAR case 91–104, Electronic Contracting, and 94–770, Simplified Acquisition Procedures/FACNET, is being shortened from September 1, 1995, to August 15, 1995. The interim rules were previously published as proposed rules in the **Federal Register** at 60 FR 12366, March 6, 1995. The comment period is being shortened to facilitate promulgation of a final rule prior to the statutory implementation date for the Federal Acquisition Streamlining Act. Late comments received from the public before the end of August will be considered if at all practicable.

DATES: The comment period on the two interim rules published on July 3, 1995 (60 FR 34735 and 34741) will close on August 15, 1995.

ADDRESSES: All interested parties should submit written comments to: General Services Administration, FAR Secretariat (VRS), 18th and F Sts. NW, Room 4035, ATTN: Ms. Beverly Fayson, Washington, DC 20405. Please cite FAC 90–29 in all correspondence.

FOR FURTHER INFORMATION CONTACT: Mr. Edward Loeb, Deputy Project Manager for the Implementation of the Federal Acquisition Streamlining Act of 1994, at (202) 501–4547. For general information, contact the FAR Secretariat, Room 4037, GS Building, Washington, DC 20405, (202) 501–4755. Please cite FAC 90–29.

Dated: July 13, 1995.

Edward C. Loeb,

Deputy Project Manager for the Implementation of the Federal Acquisition Streamlining Act of 1994.

[FR Doc. 95–17717 Filed 7–18–95; 8:45 am]

BILLING CODE 6820–34–M

federal register

Wednesday
July 19, 1995

Part V

Department of Housing and Urban Development

Office of the Assistant Secretary for Public and Indian Housing

24 CFR Parts 950 and 990

Low-Income Public and Indian Housing—Vacancy Rule; Proposed Rule

DEPARTMENT OF HOUSING AND URBAN DEVELOPMENT

Office of the Assistant Secretary for Public and Indian Housing

24 CFR Parts 950 and 990

[Docket No. FR–3647–P–04]

RIN 2577–AB44

Low-Income Public and Indian Housing—Vacancy Rule

AGENCY: Office of the Assistant Secretary for Public and Indian Housing, HUD.

ACTION: Proposed rule.

SUMMARY: This proposed rule would establish new conditions under which a Public Housing Agency (PHA), an Indian Housing Authority (IHA), or Resident Management Corporation (RMC) could include vacant units in its computation of eligibility under the Performance Funding System (PFS). (**Note**: The term housing authority (HA) will be used in this proposed rule when referring to both PHAs and IHAs.) The proposed rule would give greater recognition to units that are vacant for reasons beyond the HA's control, make changes in the current treatment of vacant units that are part of a modernization program, and, under certain circumstances, have HAs exclude long-term vacant units from their inventory of units available for occupancy. The changes being proposed are based on the recommendations of a regulatory negotiation advisory committee composed of persons who represent the interests affected by the current vacancy rule.

DATES: Comments due date: August 18, 1995.

ADDRESSES: Interested persons are invited to submit comments regarding this proposed rule to the Rules Docket Clerk, Office of General Counsel, Room 10276, Department of Housing and Urban Development, 451 Seventh Street, SW., Washington, DC 20410–0500. Communications should refer to the above docket number and title. Facsimile (FAX) comments are *not* acceptable. A copy of each communication submitted will be available for public inspection and copying between 7:30 a.m. and 5:30 p.m. weekdays at the above address.

FOR FURTHER INFORMATION CONTACT: Mr. John T. Comerford, Director, Financial Management Division, Public and Indian Housing, Room 4210, U.S. Department of Housing and Urban Development, 451 Seventh Street, SW., Washington, DC 20410, telephone (202) 708–1872. Hearing- or speech-impaired individuals may call HUD's TDD number: (202) 708–0850. [These telephone numbers are not toll-free.]

SUPPLEMENTARY INFORMATION:

Paperwork Reduction Act Statement

The information collection requirements contained in this proposed rule have been submitted to the Office of Management and Budget (OMB) for review under the Paperwork Reduction Act of 1980 (44 U.S.C. 3501–3520). No person may be subjected to a penalty for failure to comply with these information collection requirements until they have been approved and assigned an OMB control number. The OMB control number, when assigned, will be announced by separate notice in the **Federal Register**.

Public reporting burden for the collection of information requirements contained in this rule is estimated to include the time for reviewing the instructions, searching existing data sources, gathering and maintaining the data needed, and completing and reviewing the collection of information. Information on the estimated public reporting burden is provided under the Preamble heading, *Other Matters*. Send comments regarding this burden estimate or any other aspect of this collection of information, including suggestions for reducing this burden, to the Department of Housing and Urban Development, Rules Docket Clerk, 451 Seventh Street SW., Room 10276, Washington, DC 20410–0500; and to the Office of Information and Regulatory Affairs, Office of Management and Budget, Attention: Desk Officer for HUD, Washington, DC 20503.

Justification for Shortened Comment Period

It is the general practice of the Department to provide a 60-day public comment period on all proposed rules. However, the Department is shortening its usual 60-day public comment period to 30 days for this proposed rule. By statute, the rule cannot become effective unless it is in place at the beginning of the housing authority's (HA's) fiscal year. Because a number of HAs affected by this rule have fiscal years beginning on October 1, 1995, the Department wants to publish a final rule, which is not permitted to become effective for 30 days after publication, so that it will be effective by that date. The Department believes that because the rule has been developed by a consensus process, there is not likely to be much objection to its general provisions and that, therefore, the 30 days allowed for comment will be sufficient.

Regulatory Review Initiative

This proposed rule has been developed through negotiated rulemaking, sometimes referred to as regulatory negotiations or ''reg-neg.'' Negotiated rulemaking is a relatively new process for the Federal government and this was the first use of the process at HUD. The basic concept of reg-neg is to have the agency that is considering drafting a rule bring together representatives of affected interests for formal face-to-face negotiations that are open to the public. The give-and-take of the negotiation process is expected to foster constructive, creative, and acceptable solutions to difficult problems. As such, this proposed rule represents a serious effort by Department and affected interests to draft a clear, comprehensive rule that meets the needs of the program and its participants.

Consistent with Executive Order 12866 and the President's memorandum of March 4, 1995, to all Federal Departments and Agencies on the subject of Regulatory Reinvention, the Department is reviewing each of its regulations to determine whether the regulation is a candidate for elimination, streamlining, or consolidation. As part of this review, at the final rule stage this rule may undergo revisions in accordance with the President's regulatory reform initiatives. Therefore, in addition to comments on the substance of this proposed rule, the Department welcomes comments on ways, if any, that the rule may be made more understandable and less burdensome, while still assuring the goals of the Performance Funding System (PFS).

Background

HUD uses a formula approach called the Performance Funding System (PFS) to distribute operating subsidies to housing agencies. A regulatory description of the PFS can be found at 24 CFR parts 950, subpart J, and 990. Although somewhat oversimplified, the amount of subsidy received by an HA is the difference between projected expenses and projected income, with the PFS regulations detailing how these projections will be made. HAs calculate their PFS eligibility annually and submit a request for funding as part of their budget process. While the amount varies, this subsidy can represent a substantial amount of revenue to an HA. In 1994, HUD distributed over $2.6 billion in operating subsidies to HAs.

The amount of dwelling rental income an HA expects to receive is an important element in estimating subsidy eligibility. If rental income increases, operating subsidy eligibility will generally decrease. Likewise, if rental income decreases, an HA may receive a greater amount of subsidy. With some exceptions, HUD expects that HAs will project an occupancy level of 97 percent. This standard of 97% has been part of the PFS since its implementation in 1975.

That part of the PFS that deals with the projection of occupancy levels is known as the vacancy rule. The vacancy rule was published as a final rule in 1986 (51 FR 16835, May 7, 1986) and was intended to create incentives to HAs to return vacant units to occupancy and to maintain an occupancy level of 97% or higher. The rule provided these incentives by: defining the conditions under which HUD would approve the use of an occupancy level of less than 97%; specifying that an HA need not use an occupancy level higher than 97%; and, in recognition that a low number of vacancies may make it difficult for a small HA to reach 97%, allowing small HAs to use an occupancy percentage based on having 5 or fewer vacant units.

In September 1991, HUD published a proposed rule (56 FR 45814, September 6, 1991) that would have made significant changes to the way in which vacant units would be considered eligible for operating subsidy. These proposed changes would have included:

1. Increasing the occupancy standard from 97% to 98%;

2. Eliminating HUD-approved Comprehensive Occupancy Plans (COPs) as a means to justify using less than the prescribed occupancy standard;

3. Limiting the amount of subsidy paid for those vacant units that are greater than 2% of the total number of units available for occupancy; and

4. Instituting a year-end review to compare the HA's actual occupancy achieved with its projected occupancy percentage.

Before the comment period on the proposed rule expired, Congress inserted language in HUD's Appropriation Act for 1992 (105 Stat. 757) that prohibited HUD from using appropriated funds to implement the proposed rule. Later, Congress included a provision in the Housing and Community Development Act of 1992 (section 114(b), Pub. L. 102–550; 42 U.S.C. 1437g(a)(3)(A)) that required that any changes to the PFS relating to the payment of operating subsidies to vacant public housing units be accomplished only through the use of negotiated rulemaking procedures.

Regulatory Negotiations

In July 1994, HUD entered into an Interagency Agreement with the Federal Mediation and Conciliation Service (FMCS) for convening services that would assist HUD in assessing the feasibility of assembling a balanced committee willing and able to work towards the goal of consensus on a proposed vacancy rule that was within HUD's statutory authority and addressed the issues of the interested parties. If HUD proceeded with the formation of a negotiated rulemaking committee, the Interagency Agreement called for the FMCS to provide facilitating services.

The final convening report was provided to HUD in September 1994 and concluded that ''there is sufficient support to re-examine the vacancy rule through a regulatory negotiations process.'' A copy of the report titled *Convening Report for Regulatory—Negotiations on HUD's Vacancy Rule* is in the office of the Rules Docket Clerk.

Chartering of Reg-Neg Committee

As a general rule, a Federal Department is required to comply with the requirements of the Federal Advisory Committee Act (FACA), Pub. L. 92–463, 5 U.S.C. App., when it establishes or uses a group of non-Federal members as a source of advice. Under FACA, HUD was required to request a charter for this reg-neg committee. Approval of the charter submitted by HUD to the Office of Management and Budget was given on February 23, 1995.

Substantive Issues for Negotiation

The convening report identified the following issues to be addressed by the Committee:

- What constitutes an acceptable level of vacancies for housing authorities of various size classifications?
- What criteria should be used for providing less than full subsidy?
- What criteria should be used for providing full subsidy despite less than full occupancy?

Committee Membership

The FMCS conveners consulted and interviewed over 30 officials of various organizations interested in and affected by the vacancy rule. Three national HA associations—the Council of Large Public Housing Authorities (CLPHA), the National Association of Housing and Redevelopment Officials (NAHRO), and the Public Housing Authority Directors Association (PHADA)—worked together to suggest executive directors of HAs for committee membership that would reflect a balance among HAs in terms of size and number of vacant units. The national associations committed themselves to serving as staff support to the HAs selected for membership.

The members of the Committee were:

- Housing Agencies

Housing Authority of the City Of Houston (TX)
Cuyahoga Metropolitan Housing Authority (Cleveland, OH)
Housing Authority of the Birmingham District (AL)
New York City Housing Authority (NY)
Housing Authority of the City of Newark (NJ)
Housing Authority of the City of Reno (NV)
Housing Authority of the City of Littleton (CO)
Housing Authority of the City of South Bend (IN)

- Tenant Organizations and Public Interest Groups

Bromley Heath Tenant Management Corporation, Jamaica Plain, MA
New Jersey Association of Public and Subsidized Housing Residents, Inc.
Housing and Development Law Institute, Washington, DC
Illinois Association of Housing Authorities

- Federal Government

U.S. Department of Housing and Urban Development

Development of Proposed Rule

The first meeting of the Committee took place March 7–9, 1995, in Washington, DC. The FMCS conveners also served as facilitators for the Committee. Committee members agreed to a set of protocols that covered the areas of participation, decisionmaking, meetings, the role of the FMCS facilitators, and the intended product of the negotiations. The Committee agreed to define consensus as unanimous agreement to advance a specific proposal as the Committee's recommendation on any given point. As framed by one member, the goal of the negotiation should be a proposed rule that makes sense to all committee members or, alternatively, no proposed rule at all.

The Committee members then began a discussion among themselves over possible issues that needed to be addressed. The FMCS facilitators used a variety of techniques, including brainstorming, supposition, and suggestion, to have the group focus on what the general objective or objectives should be for a new vacancy rule and

to develop a list of factors that would make it possible to achieve the objectives. Points of discussion included:

1. The appropriateness of the current occupancy standard of 97% and the use of five or fewer vacant units in determining the occupancy percentage for small HAs.
2. Circumstances that create vacant units or cause vacant units to remain vacant for long periods of time. These included modernization, turnover, litigation, legislation, insurance claims, natural disasters, and market factors.
3. Circumstances or causes of vacancies that would warrant continuation of some level of subsidy payment.
4. Recognition of direct costs that are incurred by an HA regardless of the level of its vacancies.
5. Factors that could be incorporated into a vacancy rule that would promote the occupancy of vacant units.
6. Circumstances under which waivers of the regulatory provisions would be permitted.

The discussion process continued throughout the afternoon of the first day's session. The Committee reached consensus on retaining the provisions of the current rule with respect to small HAs being able to use an occupancy percentage of less than 97%, if the percentage is based on having five or fewer vacant units. The Committee, recognizing budgetary realities, rejected as not feasible or productive the possibility of redefining the 97% occupancy goal at a different optimum level.

A synopsis of the first day's efforts to develop a new vacancy rule was presented to the Committee by the facilitator at the start of the second day. The Committee, under the guidance of the facilitator, used the synopsis as a starting point to continue its discussion. Discussion included how litigation, Federal and State legislation, and regulatory action can serve as barriers to vacant units or buildings being reoccupied, demolished, sold, consolidated, or modernized.

Much of the discussion during the second morning segment was on the issue of vacant units that were undergoing modernization or were being scheduled for modernization. The Committee viewed modernization as a positive undertaking on the part of HAs to reduce vacancies, for which continued subsidy support is appropriate at some level. Topics discussed under this issue included sources of funding; scheduling of work and the ability of an HA to control its modernization; what constitutes a reasonable period of time in advance of modernization work for vacating occupied units or not reoccupying vacant units; and the treatment of small HAs that compete for modernization funding, where the resources may be insufficient to fund all approvable applications.

The facilitator prepared a new synopsis for the Committee to use as it began the second afternoon segment of the negotiations. After reviewing the synopsis, the Committee started to discuss the circumstances under which it would be reasonable to receive full or partial subsidy funding for vacant units. Full or partial subsidy was understood to mean receiving 100% or some lower level of the current Allowable Expense Level (AEL). A chart that presented the various cost items that comprise the AEL was provided to the Committee for its use. The Committee discussed whether and to what extent certain costs would be applicable to vacant units undergoing modernization, excess vacant units or empty buildings not undergoing modernization.

For partial funding purposes, the Committee agreed that the determination of the appropriate partial amount should be expressed in terms of a percentage of the AEL, and not in terms of reimbursement of actual allowable costs, because of the administrative burden that a direct reimbursable system would entail. The Committee then discussed various levels of partial subsidy support and whether it was reasonable to apply one partial subsidy level to all the different scenarios under consideration (vacant units undergoing modernization, excess vacant units, or empty buildings not undergoing modernization).

During the discussion the point was made that the current vacancy rule permits vacant units that are part of a funded, on-schedule modernization program to receive full funding. The Committee agreed to full subsidy eligibility for vacant units undergoing modernization, if the units have to be vacant in order to accomplish the work and the units are included in a HUD-approved modernization budget. The HA must place the vacant units under construction within two Federal Fiscal Years (FFYs) of funding approval. The Committee discussed a proposal to permit vacant units proposed for rehabilitation in the second year of an HA's Five-Year Action Plan to be eligible for full funding, but rejected the idea because of the annual cycle of Federal appropriations. Discussion continued on what partial subsidy level would be sufficient for the HA to maintain the structural integrity of vacant buildings/units in other circumstances. The session ended with an agreement to revisit this topic the following day.

The third day's session began with a discussion by members on whether a new vacancy rule should contain a section describing the general circumstances under which a waiver might be given. The Committee felt that there may be circumstances beyond an HA's or Resident Management Corporation's (RMC) control that have brought about a vacancy problem that, despite the HA's/RMC's documented best efforts, is not correctable or would place an unreasonable burden on the HA/RMC. The Committee agreed that the procedures and the documentation needed for obtaining a waiver would not be part of the new rule, but would be contained in a notice.

An updated synopsis was presented to the Committee for review and discussion. The Committee then returned to the issue of partial subsidies and agreed that an appropriate level of subsidy support would be 20% of the AEL. The Committee agreed that this level of support would be applied against vacant units that have been vacant for more than 12 months and were not undergoing modernization or were not vacant due to circumstances beyond the HA's control. These long-term vacant units will be removed from the HA's inventory of unit months available (UMAs). However, the Committee noted and emphasized that full funding of utilities under the current PFS would be continued. The Committee also agreed that the new vacancy rule would eliminate the current provisions regarding Comprehensive Occupancy Plans (COPs) and reiterated that units approved by HUD for deprogramming would not be included in the calculation of UMAs. A final synopsis containing all the consensus agreements made to that date was prepared for the Committee.

The second meeting of the Committee took place April 4–5, 1995, in Washington, DC. The meeting began with a discussion on whether the proposed rule language should reflect consequences that could occur if funds already appropriated by Congress for the Comprehensive Grant Program (CGP) were rescinded. If funds for the CGP were to be significantly decreased, HAs might have to delay placing some vacant units under a construction contract. This could lead to the HA having long-term vacancies that would not be eligible for full operating subsidy. The Committee agreed to language that

would permit the HA to seek a waiver to deal with this situation.

The Committee also discussed the treatment of Resident Management Corporations (RMCs) that have responsibility for administering modernization programs, but are dependent upon the HA to provide funding. The Committee found that there are parallels between requests made by HAs for Comprehensive Improvement Assistance Program (CIAP) funds and requests made by RMCs for CGP funds, in that an otherwise approvable application or request could be denied because of insufficient funding. The Committee agreed to language that would treat this situation as a circumstance or action that was beyond the RMC's control.

The Committee then began a section-by-section review of the proposed rule language that had been prepared by HUD staff based on the agreements reached at the first meeting. Edits and clarifications were proffered for incorporation into a new draft. The Committee then followed the same process in its review of the preamble material.

A copy of the approved minutes is available for public inspection and copying from the Department's Rules Docket Clerk (see **ADDRESSES** in this preamble).

Components of Proposed Rule

The following elements of the proposed rule evolved from the consensus-seeking process applied in the reg-neg Committee. Although the Committee recognized that there are anomalies that will not be reached by the general elements of this proposed rule, its provisions were developed to address the majority of the situations facing HAs.

(1) The standard for expected occupancy will continue to be 97%. The proposed rule would also maintain the five-unit exception, as in the current regulation, for small HAs where small numbers of vacant units would make it extremely difficult to attain a 97% occupancy rate.

(2) HAs will be allowed to take into consideration circumstances and actions beyond the HA's control that prohibit the HA from occupying, selling, demolishing, rehabilitating, reconstructing, consolidating, or modernizing vacant units. Such circumstances and actions are limited to:

(a) *Litigation*, such as a court order or settlement agreement that is legally enforceable. Units that are being held vacant as part of a court-ordered or HUD-approved desegregation effort would be an example.

(b) *Laws.* Federal, Tribal, or State laws of general applicability, or their implementing regulations. For example, demolition or disposition requirements that have the effect of preventing an HA from taking action to remove unusable units from its inventory may be considered a circumstance beyond the HA's control. However, units vacant only because they do not meet minimum standards pertaining to construction or habitability under Federal, State, or local laws or regulations will not be considered vacant due to circumstances and actions beyond the PHA's control.

(c) *Changing market conditions.* For example, small PHAs that are located in areas experiencing population loss or economic dislocations may face a lack of demand in the foreseeable future, even after the HA has taken aggressive marketing and outreach measures.

(d) *Natural disasters.*

(e) *Insufficient funding* for otherwise approvable applications made for Comprehensive Improvement Assistance Program (CIAP) funds.

(f) *RMC Funding.* The failure of a PHA to fund an otherwise approvable RMC request for Federal modernization funding.

(g) *Casualty Losses.* Delays in repairing damage to vacant units due to the time needed for settlement of insurance claims.

(3) An HA with vacant units in a project that is otherwise viable, but is undergoing modernization that includes work necessary to reoccupy the vacant units will not be penalized for the vacancies when the HA determines its operating subsidy eligibility, if one of the following conditions is met:

(a) The vacant units are under construction (i.e., construction contract awarded or force account work started); or

(b) Treatment of the vacant units is included in a HUD-approved modernization budget (e.g., an approved Annual Statement for the Comprehensive Grant Program (CGP) or CIAP Budget), but the time period for placing the vacant units under construction has not yet expired. The HA must place the vacant units under construction within two Federal Fiscal Years (FFYs) after the FFY in which the modernization funds are approved. For example, if the HA receives HUD approval for the modernization budget in FFY 1996, the HA must start construction on the vacant units by September 30, 1998. If the HA fails to place the vacant units under construction within this 2-year time frame, the units will be treated as long-term vacancies and the HA is eligible for limited subsidy for those units.

The 2-year provision to place vacant units under construction will not be extended. Failure to meet this provision affects subsidy eligibility only, not the use of the modernization funds, which are governed by a modernization implementation schedule that may be longer than 2 years.

Because of the funding cycle for modernization funds, HAs with FYs beginning January 1 or April 1 may not have approved modernization budgets at the time they develop operating budgets for those years. These HAs would use their current approved modernization budget to determine their subsidy eligibility, but would be permitted to submit an operating budget revision when the modernization budget had been approved.

(4) Any HA that estimates it will have vacant units in its requested budget year in excess of 3% of the units available for occupancy (and in excess of five vacant units), after adjusting for units that are vacant for reasons beyond its control (as described in item 2 under this heading), and vacant units that are covered by funded modernization (as described in item 3 under this heading), will receive less than full operating subsidy for these vacant units. If a unit has been vacant for longer than 12 months, it will be removed from the HA's calculation of units available for occupancy and subsidy eligibility will be limited to 20% of the Allowable Expense Level. Units that are vacant for 12 months or less will be included in the HA's calculation of units available for occupancy, but the HA will have to presume dwelling rental income will be generated by these units.

(5) Provisions in the current vacancy rule relating to Comprehensive Occupancy Plans (COPs) will be eliminated. An HA that has a HUD-approved COP at the time the new vacancy rule becomes effective may choose to determine its PFS eligibility under the existing rule or to terminate its COP and become subject to the new rule.

(6) Because the 2-year provision to place vacant units under construction is new, the proposed rule contains a transition section to address the treatment of units already under an approved modernization budget at the time the new rule becomes effective. Such units may have a longer time period, if already approved by HUD.

(7) The new vacancy rule would permit the granting of waivers to HAs or RMCs when necessary to address unusual situations. HUD will establish

procedures for requesting a waiver and required documentation. HUD will take prompt action in responding to a waiver request, and any relief provided will be in accordance with these procedures and at a level established at HUD's discretion on a case-by-case basis.

Computation of Subsidy Under Proposed Rule

In computing its per-unit Dwelling Rental Income under the Performance Funding System, an HA will determine its Projected Occupancy Percentage in much the same manner as in the current rule. The HA will either take a ''snapshot'' of the last day of the month which is 6 months before the start of its fiscal year or take the average occupancy during that month. The HA will then use the data to develop an estimated average occupancy percentage for its Requested Budget Year (RBY). The conditions under which the RBY occupancy percentage will be used as the projected occupancy percentage for purposes of determining operating subsidy eligibility are described below:

(1) If the RBY percentage is 97% or higher, the HA will use 97% as its projected occupancy percentage. If the HA estimates a RBY percentage of less than 97% but can demonstrate that it will have an average of five or fewer vacant units in the requested budget year, the HA may use its RBY percentage as its projected occupancy percentage. (Reference in this part to ''more than five units'' or ''fewer than five units'' refers to a circumstance in which 5 units equals or exceeds 3% of the number of units to which the 3% threshold is applicable.)

Example: The ABC Housing Authority has 1,000 units available for occupancy. It estimates for its RBY an average of 980 units will be occupied, an occupancy rate of 98%. Since the RBY percentage is higher than 97%, it will use 97% as its projected occupancy percentage.

Example: The XYZ Housing Authority has 50 units available for occupancy. It estimates that for its RBY an average of 46 units will be occupied; a RBY occupancy percentage of 92%. Since the Authority estimates that it will have four vacant units in the RBY, it will use 92% as its projected occupancy percentage.

(2) If the RBY occupancy percentage is less than 97% and the HA has more than 5 vacant units, the HA will adjust its estimate of vacant units to exclude units undergoing modernization. (see item 3 under the section of the preamble headed *COMPONENTS OF PROPOSED RULE).* The HA will also adjust its estimate for units that are vacant due to circumstances and actions beyond the HA's control (see item 2 under the section of the preamble headed *COMPONENTS OF PROPOSED RULE).* After making these adjustments, the HA will recalculate its estimated vacancy percentage. If the recalculated vacancy percentage is 3% or less (or the HA would have five or fewer vacant units), the HA will use its RBY occupancy percentage as its projected occupancy percentage.

Example: The ABC Housing Authority has 1,000 units available for occupancy. It estimates that for its RBY an average of 950 units will be occupied, a RBY occupancy percentage of 95%. Of its 50 vacant units, 40 units are part of a HUD-approved modernization budget and will be under a construction contract during the budget year. The Authority will adjust its 50 vacancies to exclude the 40 vacant units undergoing modernization and recalculate its RBY vacancy percentage (10/1,000 = 1%). Since the recalculated RBY vacancy percentage is less than 3%, the Authority will use its RBY occupancy percentage of 95% as its projected occupancy percentage.

Example: The XYZ Housing Authority is a small HA with 50 units available for occupancy. It estimates for its RBY an average of 40 units will be occupied, a RBY occupancy percentage of 80%. The Authority documents that 5 of the vacancies are efficiencies in a building serving elderly residents. There is no demand for these units despite aggressive marketing and outreach and selling, demolishing, or reconfiguration of the units is not possible. Since the Authority can show that these 5 vacancies are due to circumstances or action beyond its control, it will adjust its 10 vacancies to exclude these 5. With the number of vacant units now recalculated to be 5, the Authority will use its RBY occupancy percentage of 80% as its projected occupancy percentage.

(3) If the RBY vacancy percentage is greater than 3% and the HA has more than 5 vacant units, even after adjusting for vacant units undergoing modernization or units vacant due to circumstances and actions beyond its control, the HA will then recalculate its RBY occupancy percentage by excluding from its calculation of units months available (UMAs), all vacant units that have been vacant for longer than 12 months that are not either undergoing modernization or vacant for reasons beyond the HA's control. The long-term vacancies removed will be eligible to receive a reduced operating subsidy calculated at 20% of the HA's AEL. The conditions under which the recalculated RBY occupancy percentage will be used as the projected occupancy percentage for purposes of determining operating subsidy eligibility for a low-occupancy HA are described below:

(a) If the recalculated RBY occupancy percentage estimate is 97% or higher, the HA will use 97%.

Example: The ABC Housing Authority has 1,000 units available for occupancy. It estimates for its RBY an average of 950 units will be occupied, a RBY occupancy percentage of 95%. The 50 vacant units do not meet the criteria of being either vacant units undergoing modernization or vacant due to circumstances or actions beyond the HA's control. There are 25 long-term vacancies in the group of 50. The Authority will remove these 25 units from its determination of units available for occupancy and recalculate its RBY occupancy percentage (950/975 = 98%). Since the RBY occupancy percentage is higher than 97%, it will use 97% as its projected occupancy percentage.

(b) If the recalculated RBY occupancy percentage is less than 97%, but the RBY vacancy rate after adjusting for vacant units undergoing modernization and units that are vacant due to circumstances and actions beyond the HA's control is 3% or less (or the HA has five or fewer vacant units), the HA may use its recalculated RBY Occupancy Percentage as its projected occupancy percentage.

Example: The ABC Housing Authority has 1,000 units available for occupancy. It estimates for its RBY that an average of 900 units will be occupied, a RBY occupancy percentage of 90%. Of its 100 vacant units, 50 units are part of a HUD-approved modernization budget and will be under a construction contract during the budget year. The remaining 50 units fall outside the definition of being vacant due to circumstances or actions beyond the HA's control; 25 of these units have been vacant for more than 12 months (long-term vacancies) and 25 have been vacant for 12 months or less. When the Authority excludes its long-term vacancies from its inventory of units available for occupancy and recalculates its RBY occupancy percentage, it finds that the recalculated RBY occupancy percentage is still below 97%, (900/975 = 92%). The Authority will then take its 75 vacancies, exclude the 50 vacant units undergoing modernization, and recalculate its RBY vacancy percentage. Since the resulting vacancy percentage is 3% or below (25/975 = 3%), the Authority will use its recalculated RBY occupancy percentage of 92% as its projected occupancy percentage.

(c) If the vacancy percentage is greater than 3% and the HA has more than five vacant units after adjusting for vacant units undergoing modernization and units that are vacant due to circumstances and actions beyond the HA's control, the HA will use 97% as its projected occupancy percentage, but will be allowed to adjust the 97% by the number of vacant units undergoing modernization and units that are vacant due to circumstances and actions beyond the HA's control. For a small HA using five vacant units as its occupancy objective for the RBY, the HA will determine what percentage five

units represents as a portion of its units available for occupancy and subtract that percentage from 100%. The result will be used as the HA's projected occupancy percentage; however, the HA will be allowed to adjust the projected occupancy percentage by vacant units undergoing modernization and units that are vacant for circumstances and actions beyond the HA's control.

Example: The ABC Housing Authority has 1,000 units available for occupancy. It estimates for its RBY an average of 900 units will be occupied, a RBY occupancy percentage of 90%. Of its 100 vacant units, 50 units are part of a HUD-approved modernization budget and will be under a construction contract during the budget year. The remaining 50 units fall outside the definition of being vacant due to circumstances or actions beyond the HA's control; none of the vacancies are long-term vacancies. The Authority will have to use a projected occupancy percentage of 97%, but will adjust the 97% by the number of vacant units undergoing modernization. The 50 vacant units undergoing modernization represent 5% of the Authority's inventory and the 5% will be subtracted from the 97%. The Authority will use 92% as its projected occupancy percentage.

(4) The relationship between the RBY occupancy percentage and the projected occupancy percentage is illustrated in the chart below:

RELATIONSHIP BETWEEN THE RBY OCCUPANCY PERCENTAGE AND THE PROJECTED OCCUPANCY PERCENTAGE

RBY occupancy percentage	Projected occupancy percentage
1. RBY Occupancy Percentage is 97% or higher	1. Use 97%.
2. RBY Occupancy Percentage is less than 97%, but HA estimates it will have 5 or fewer vacant units in RBY.	2. Use the RBY Occupancy Percentage.
3. RBY Occupancy Percentage is less than 97% and HA has more than 5 vacant units.	3. Use the RBY Occupancy Percentage if vacancy percentage is 3% or less after adjusting for vacant units undergoing modernization and units vacant due to circumstances and actions beyond the HA's control.
4. RBY Occupancy Percentage is less than 97% and HA has more than 5 vacant units, even after adjusting for vacant units undergoing modernization and units vacant due to circumstances and actions beyond the HA's control.	4. HA will exclude all long-term vacant units from its inventory of units available for occupancy and will recalculate its RBY Occupancy Percentage: a. If the recalculated RBY Occupancy Percentage is 97% or higher, the HA will use 97%. b. If the recalculated RBY Occupancy Percentage is less than 97%, but the HA estimates it will have 5 or fewer vacant units in the RBY, the HA will use the RBY Occupancy Percentage. c. If the recalculated RBY Occupancy Percentage is less than 97% and HA has more than 5 vacant units, even after making all adjustments, the HA will use 97%, but will be allowed to adjust the 97% for vacant units undergoing modernization and units vacant due to circumstances and actions beyond the HA's control. A small HA will determine what percentage five units represents as a portion of its units available for occupancy and will make adjustments against that percentage.

Comparison of Current and Proposed Rule

The proposed rule distinguishes itself from the current regulation in several important respects, as follows:

(1) *Conditions under which a vacant unit is considered eligible for subsidy.* The proposed rule would limit the circumstances under which an HA could include excess long-term vacancies in its inventory of units available for occupancy to those units that are: (a) Under construction as part of a modernization program; (b) included in a HUD-approved modernization budget, and the time period for placing the vacant units under construction has not yet expired; or (c) subject to circumstances and actions recognized to be beyond the HA's control. If long-term vacant units are removed from an HA's inventory, those units would be eligible for a reduced subsidy, calculated at 20% of the AEL, and would continue to be eligible for utility costs. Section 990.108(b)(3) describes the eligibility of long-term vacancies for these other costs. The current rule does not make a distinction in the length of time a unit has been vacant. The Committee believed that a reduced subsidy level of 20% for such vacant units would be sufficient to maintain the structural integrity of the units, but would also provide incentive to returning the units to occupancy as soon as feasible.

(2) *Treatment of vacant units in CIAP, CGP or other funded modernization programs.* Under the existing rule, the Department allows each HA an opportunity to receive special treatment in determining operating subsidy eligibility if the HA has or applies to have vacant units in a funded, on-schedule modernization program. This special treatment has been provided in two ways: first, if an HA anticipates that it will have less than 97% occupancy in its budget year, the HA may be able to use that lower percentage in its operating subsidy calculations, by showing that its occupancy rate would be 97% or higher after adjusting for vacant units in an on-schedule modernization program. Second, if an HA has a HUD-approved Comprehensive Occupancy Plan (COP), the HA would be permitted to adjust its otherwise fixed occupancy goals if the HA could demonstrate that it had submitted an approvable application for modernization work that was rejected because of insufficient HUD funds. This special treatment has allowed an HA to be eligible for full operating subsidy for vacant units that are undergoing modernization and for units awaiting modernization when funds become available.

The Committee supported the principle embodied in the existing rule, i.e., HAs should not be unduly burdened in undertaking modernization activities because of lost rental revenue. However, the Committee believed that eligibility for full operating subsidy to this group of vacant units should be limited to units that are actually under a construction contract or included in an approved modernization budget. The existing rule does not make this distinction and permits the special treatment when funds are first

committed to the modernization program, often for the development of architectural and engineering (A & E) specifications. The A & E work may cover a number of units, buildings, or projects that will not actually go to construction for some period of time; furthermore, the construction work might not require the unit to be vacant.

(3) *Recognition of Circumstances Beyond an HA's/RMC's Control That Cause Vacancies.* The proposed rule would permit an HA or RMC to be eligible for full operating subsidies for its vacant units if it can show that the circumstances or actions causing the vacancies are beyond the HA's/RMC's control and are prohibiting it from occupying, selling, demolishing, rehabilitating, reconstructing, consolidating, or modernizing the vacant units. A listing of eligible circumstances is provided in the section of this preamble titled *Components of the Proposed Rule.* The existing regulation gives special recognition only to vacant units in projects with funded, on-schedule modernization programs.

(4) *Elimination of Comprehensive Occupancy Plans (COPs).* Under the proposed rule, no new COPs would be approved. An HA that has a HUD-approved COP at the time the new vacancy rule becomes effective will have the option of choosing to determine its PFS eligibility under the existing rule or to terminate its COP and be subject to the new rule. HAs are still encouraged to undertake the structured, analytical approach encompassed in the COP concept, i.e., to identify the causes of their vacancy problems and develop vacancy reduction strategies and actions that are responsive to the problems and appropriate to the management and resources of the HA.

Other Matters

Public Reporting Burden

The information collection requirements contained in this proposed rule have been submitted to the Office of Management and Budget under the Paperwork Reduction Act of 1980 (44 U.S.C. 3501–3520). The Department has determined that the following provisions contain information collection requirements.

TABULATION OF ANNUAL REPORTING BURDEN—CONTRIBUTIONS FOR OPERATING SUBSIDIES—PERFORMANCE FUNDING SYSTEM; LOW-INCOME PUBLIC HOUSING—VACANCY; PROPOSED RULE

Description of information collection	Section of 24 CFR affected	No. of respondents	No. of responses per respondent	Total annual responses	Hours per responses	Total hours
Determining operating income level	950.725; 990.109	3,100	1	3,100	1	3,100
Total reporting burden		3,100	1	3,100	1	3,100

Environmental Impact

In accordance with 40 CFR 1508.4 of the regulations of the Council on Environmental Quality and 24 CFR 50.20(o) of the HUD regulations, the policies and procedures contained in this proposed rule relate only to operating costs that do not affect a physical structure or property and, therefore, are categorically excluded from the requirements of the National Environmental Policy Act.

Regulatory Flexibility Act

The Secretary, in accordance with the Regulatory Flexibility Act (5 U.S.C. 605(b)), has reviewed this proposed rule before publication and by approving it certifies that this proposed rule will not have a significant economic impact on a substantial number of small entities. The proposed rule would result in eligibility criteria for low-income public and Indian housing operating subsidies that may impact those HAs with large numbers of long-term vacant units. However, HUD's data incident to establishing the Vacancy Reduction Program indicates that high-vacancy PHAs are relatively few in number (and high-vacancy IHAs virtually nonexistent), and that a preponderance of the program's vacancies are in a very limited number of the larger PHAs. Most HAs will be unaffected by this proposed rule.

Executive Order 12612, Federalism

The General Counsel, as the Designated Official under section 6(a) of Executive Order 12612, *Federalism*, has determined that the policies contained in this proposed rule would not have substantial direct effects on States or their political subdivisions, or the relationship between the Federal government and the States, or on the distribution of power and responsibilities among the various levels of government. As a result, the proposed rule is not subject to review under the Order. The rule will refine the criteria under which operating subsidies are paid on HUD-assisted housing owned and operated by HAs, but will not interfere with State or local government functions.

Executive Order 12606, the Family

The General Counsel, as the Designated Official under Executive Order 12606, *The Family*, has determined that this proposed rule would not have potential for significant impact on family formation, maintenance, and general well-being, and, thus, is not subject to review under the Order. No significant change in existing HUD policies or programs will result from promulgation of this proposed rule, as those policies and programs relate to family concerns. The proposed rule merely involves the amount of funding that an HA should receive under a refinement of an existing procedure.

Regulatory Agenda

This proposed rule was listed as Item No. 1526 in the Department's Semiannual Agenda of Regulations published on May 8, 1995 (60 FR 23368, 23402), in accordance with Executive Order 12866 and the Regulatory Flexibility Act.

The Catalog of Federal Domestic Assistance Program numbers for this proposed rule are 14.145, 14.146, and 14.147.

List of Subjects

24 CFR Part 950

Aged, Grant programs—housing and community development, Grant programs—Indians, Disability, Homeownership, Indians, Low and moderate income housing, Public housing, Reporting and recordkeeping requirements.

24 CFR Part 990

Grant programs—housing and community development, Public housing, Reporting and recordkeeping requirements.

For the reasons set out in the preamble, parts 950 and 990 of title 24 of the Code of Federal Regulations are proposed to be amended as follows:

PART 950—INDIAN HOUSING PROGRAMS

1. The authority citation for part 950 would continue to read as follows:

Authority: 25 U.S.C. 450e(b); 42 U.S.C. 1437aa–1437ee and 3535(d).

2. Section 950.102 would be amended by adding definitions for ''Long-term vacancy'', ''Units vacant due to circumstances and actions beyond the IHA's control'', and ''Vacant unit undergoing modernization'', and by revising the definition for ''Unit months available'', to read as follows:

§ 950.102 Definitions.

* * * * *

Long-term vacancy. This term means the same as it is used in the definition of ''Unit Months Available'' in this section.

* * * * *

Unit months available. Project Units multiplied by the number of months the Project Units are available for occupancy during a given IHA fiscal year. For purposes of this subpart, a unit is considered available for occupancy from the date established as the End of the Initial Operating Period for the Project until the time the unit is approved by HUD for deprogramming and is vacated or is approved for nondwelling use. A unit will be considered a long-term vacancy and will not be considered available for occupancy in any given IHA Requested Budget Year if the IHA determines that:

(1) The unit has been vacant for more than 12 months at the time the IHA determines its Actual Occupancy Percentage;

(2) The unit is not either:

(i) A vacant unit undergoing modernization; or

(ii) A unit vacant for circumstances and actions beyond the IHA's control, as these terms are defined in this section; and

(3) The IHA determines that it will have a vacancy percentage of more than 3 percent and will have more than five vacant units, for its Requested Budget Year, even after adjusting for vacant units undergoing modernization and units that are vacant for circumstances and actions beyond the IHA's control, as defined in this section. (Reference in this subpart to ''more than five units'' or ''fewer than five units'' shall refer to a circumstance in which 5 units equals or exceeds 3 percent of the number of units to which the 3 percent threshold is applicable.)

Units vacant due to circumstances and actions beyond the IHA's control. Dwelling units that are vacant due to circumstances and actions that prohibit the IHA from occupying, selling, demolishing, rehabilitating, reconstructing, consolidating or modernizing vacant units and are beyond the IHA's control. For purposes of this definition, circumstances and actions beyond the IHA's control are limited to:

(1) *Litigation.* The effect of court litigation such as a court order or settlement agreement that is legally enforceable. An example would be units that are being held vacant as part of a court-ordered or HUD-approved desegregation plan.

(2) Laws. Federal, Tribal, or State laws of general applicability, or their implementing regulations. Units vacant only because they do not meet minimum standards pertaining to construction or habitability under Federal, State, or local laws or regulations will not be considered vacant due to circumstances and actions beyond the IHA's control.

(3) *Changing market conditions.* For example, IHAs may face a lack of demand in the foreseeable future, even after the IHA has taken aggressive marketing and outreach measures.

(4) Natural disasters.

(5) *Insufficient funding* for otherwise approvable applications made for Comprehensive Improvement Assistance Program (CIAP) funds.

(6) *Resident Organization Funding.* The failure of an IHA to fund an otherwise approvable RO request for Federal modernization funding;

(7) *Casualty Losses.* Delays in repairing damage to vacant units due to the time needed for settlement of insurance claims.

* * * * *

Vacant unit undergoing modernization. Except as provided in § 950.775(a), a vacant unit in an otherwise viable project (as determined using the indicia in § 970.6 of this chapter), when the project is undergoing modernization that includes work that is necessary to reoccupy the vacant unit, and in which one of the following conditions is met:

(1) The unit is under construction (i.e., the construction contract has been awarded or force account work has started); or

(2) The treatment of the vacant unit is included in a HUD-approved modernization budget (e.g., the Annual Statement for the Comprehensive Grant Program (CGP) (Form HUD–52837 or its successor), or the Comprehensive Improvement Assistance Program (CIAP) Budget (Form HUD–52825 or its successor)), but the time period for placing the vacant unit under construction has not yet expired. The IHA must place the vacant unit under construction within two Federal Fiscal Years (FFYs) after the FFY in which the modernization funds are approved.

* * * * *

3. Section 950.720 would be amended by revising paragraph (b), to read as follows:

§ 950.720 Other costs.

* * * * *

(b) (1) *Costs attributable to units approved for deprogramming and vacant* may be eligible for inclusion, but must be limited to the minimum services and protection necessary to protect and preserve the units until the units are deprogrammed. Costs attributable to units temporarily unavailable for occupancy because the units are utilized for IHA-related activities are not eligible for inclusion. In determining the PFS operating subsidy, these units shall not be included in the calculation of Unit Months Available. Units approved for deprogramming shall be listed by the IHA, and supporting documentation regarding direct costs attributable to such units shall be included as a part of the Performance Funding System calculation in which the IHA requests operating subsidy for these units. If the IHA requires assistance in this matter, the IHA should contact the HUD Field Office.

(2) Units approved for nondwelling use to promote economic self-sufficiency services and anti-drug activities are eligible for operating subsidy under the conditions provided in this paragraph (b)(2), and the costs attributable to these units are to be included in the operating budget. If a unit satisfies the conditions stated below, it will be eligible for subsidy at the rate of the AEL for the number of months the unit is devoted to such use. Approval will be given for a period of no more than 3 years. HUD may renew the approval to allow payments after that period only if the IHA can demonstrate that no other sources for paying the non-utility operating costs of the unit are available. The conditions the unit must satisfy are:

(i) The unit must be used for either economic self-sufficiency activities

directly related to maximizing the number of employed residents or for anti-drug programs directly related to ridding the development of illegal drugs and drug-related crime. The activities must be directed toward and for the benefit of residents of the development.

(ii) The IHA must demonstrate that space for the service or program is not available elsewhere in the locality and that the space used is safe and suitable for its intended use or that the resources are committed to make the space safe and suitable.

(iii) The IHA must demonstrate satisfactorily that other funding is not available to pay for the non-utility operating costs. All rental income generated as a result of the activity must be reported as income in the operating subsidy calculation.

(iv) Operating subsidy may be approved for only one site (involving one or more contiguous units) per public housing development for economic self-sufficiency services or anti-drug programs, and the number of units involved should be the minimum necessary to support the service or program. Operating subsidy for any additional sites per development can only be approved by HUD Headquarters.

(v) The IHA must submit a certification with its Performance Funding System Calculation that the units are being used for the purpose for which they were approved and that any rental income generated as a result of the activity is reported as income in the operating subsidy calculation. The IHA must maintain specific documentation of the units covered. Such documentation should include a listing of the units, the street addresses, and project/management control numbers.

(3) Long-term vacant units that are not included in the calculation of Unit Months Available are eligible for operating subsidy in the Requested Budget Year at the rate of 20 percent of the AEL. Allowable utility costs for long term vacant units will continue to be funded in accordance with § 950.715.

* * * * *

4. In § 950.725, paragraph (b)(3) would be revised, to read as follows:

§ 950.725 Projected operating income level.

(b) * * *

(3) *Projected Occupancy Percentage.* The IHA shall determine its projected percentage of occupancy for all Project Units (Projected Occupancy Percentage), as follows:

(i) *General.* Using actual occupancy data collected before the start of the budget year as a beginning point, the IHA will develop estimates for its Requested Budget Year (RBY) of: how many units the IHA will have available for occupancy; how many of the available units will be occupied and how many will be vacant, and what the average occupancy percentage will be for the RBY. The conditions under which the RBY occupancy percentage will be used as the projected occupancy percentage for purposes of determining operating subsidy eligibility are described below.

(ii) *High Occupancy IHA—No Adjustments Necessary.* If the IHA's RBY Occupancy Percentage, calculated in accordance with § 950.760, is equal to or greater than 97%, the IHA's Projected Occupancy Percentage is 97%. If the IHA's RBY Occupancy Percentage is less than 97%, but the IHA demonstrates that it will have an average of five or fewer vacant units in the requested budget year, the IHA will use its RBY Occupancy Percentage as its projected occupancy percentage.

(iii) *Adjustments in Determining Occupancy.* If the IHA's RBY Occupancy Percentage is less than 97% and the IHA has more than 5 vacant units, the IHA will adjust its estimate of vacant units to exclude vacant units undergoing modernization and units that are vacant due to circumstances and actions beyond the IHA's control. After making this adjustment, the IHA will recalculate its estimated vacancy percentage for the RBY.

(A) *High Occupancy IHA after adjustment.* If the recalculated vacancy percentage is 3% or less (or the IHA would have five or fewer vacant units), the IHA will use its RBY Occupancy Percentage as its projected occupancy percentage.

(B) *Low Occupancy IHA—adjustment for long-term vacancies.* If the recalculated vacancy percentage is greater than 3% (or more than 5 vacant units), the IHA will then further adjust its RBY Occupancy Percentage by excluding from its calculation of Unit Months Available (UMAs), all units that have been vacant for longer than 12 months that are not vacant units undergoing modernization or are not units vacant due to circumstances and actions beyond the IHA's control.

(iv) *Low Occupancy IHA after all adjustments.* An IHA that has determined its RBY Occupancy Percentage in accordance with paragraph (b)(iii)(B) of this section will be eligible for operating subsidy as follows:

(A) Long-term vacancies removed from the calculation of UMAs will be eligible to receive a reduced operating subsidy calculated at 20% of the IHA's AEL.

(B) If the recalculated RBY Occupancy Percentage is 97% or higher, the IHA will use 97%.

(C) If the recalculated RBY Occupancy Percentage is less than 97%, but the vacancy rate after adjusting for vacant units undergoing modernization and units that are vacant due to circumstances and actions beyond the IHA's control is 3% or less (or the IHA has five or fewer vacant units), the IHA may use its recalculated RBY Occupancy Percentage as its projected occupancy percentage.

(D) If the recalculated RBY Occupancy Percentage is less than 97% and the vacancy percentage is greater than 3% (or the IHA has more than five vacant units) after adjusting for vacant units undergoing modernization and units that are vacant due to circumstances and actions beyond the IHA's control, the IHA will use 97% as its projected occupancy percentage, but will be allowed to adjust the 97% by the number of vacant units undergoing modernization and units that are vacant due to circumstances and actions beyond the IHA's control. For a small IHA using five vacant units as its occupancy objective for the RBY, the IHA will determine what percentage five units represents as a portion of its units available for occupancy and subtract that percentage from 100%. The result will be used as the IHA's projected occupancy percentage, but the IHA will be allowed to adjust the projected occupancy percentage by vacant units undergoing modernization and units that are vacant for circumstances and actions beyond the IHA's control.

* * * * *

5. Section 950.760 would be revised to read as follows:

§ 950.760 Determining Actual and Requested Budget Year Occupancy Percentages.

(a) *Actual Occupancy Percentage.* When submitting Performance Funding System Calculations for Requested Budget Years beginning on or after January 1, 1996, the IHA shall determine an Actual Occupancy Percentage for all Project Units included in the Unit Months Available. The IHA shall have the option of basing this option on either:

(1) The number of units occupied on the last day of the month that ends 6 months before the beginning of the Requested Budget Year; or

(2) The average occupancy during the month ending 6 months before the beginning of the Requested Budget Year. If the IHA elects to use an average occupancy under this paragraph (a)(2),

the IHA shall maintain a record of its computation of its Actual Occupancy Percentage.

(b) *Requested Budget Year Occupancy Percentage.* The IHA will develop a Requested Budget Year Occupancy Percentage by taking the Actual Occupancy Percentage and adjusting it to reflect changes up or down in occupancy during the Requested Budget Year due to HUD-approved activities such as units undergoing modernization, new development, demolition, or disposition. If after the submission and approval of the Performance Funding System Calculations for the Requested Budget Year, there are changes up or down in occupancy because of modernization, new development, demolition or disposition that are not reflected in the Requested Budget Year Occupancy Percentage, the IHA may submit a revision to reflect the actual change in occupancy due to these activities.

(c) *Documentation Required to be Maintained.* The IHA must maintain, and upon HUD's request, make available to HUD specific documentation of the occupancy status of all units, including long-term vacancies, vacant units undergoing modernization, and units vacant due to circumstances and actions beyond the IHA's control. This documentation shall include a listing of the units, street addresses, and project/management control numbers.

§ 950.770 [Removed and Reserved]

6. Section 950.770, Comprehensive Occupancy Plan (COP) Requirements, would be removed and reserved.

7. A new § 950.775 would be added, to subpart J, to read as follows:

§ 950.775 Transition provisions.

(a) *Treatment of units already under an approved modernization budget.* Vacant units to be rehabilitated under modernization budgets approved in FFY 1995 or prior are subject to the modernization implementation schedule, without extension, previously approved by HUD. It is the intent of HUD not to penalize IHAs that have longer construction schedules in an approved modernization budget.

(b) *Treatment of Existing COPs.* (1) An IHA that on [effective date of final rule] is operating under a Comprehensive Occupancy Plan (COP) approved by HUD under § 950.770, as that section existed before [effective date of final rule] may, until the expiration of its COP, continue to determine its PFS eligibility under the provisions of part 950 effective on [1 day before effective date of final rule]. If the IHA does not elect to continue to determine its PFS eligibility using its COP, the IHA's PFS eligibility will be calculated in accordance with this part.

(2) HUD will not approve any extensions of existing COPs.

8. A new § 950.777 would be added to subpart J, to read as follows:

§ 950.777 Waivers.

(a) *Documentation for Waiver.* A waiver may be granted in accordance with § 999.101 of this chapter. Any request for a waiver should include documentation that the IHA has made best efforts to correct the problems underlying its excess vacancies and could not correct the problems in a cost-effective manner.

(b) *Effect of Rescission.* If there is a rescission of appropriated funds that reduces the level of Comprehensive Grant Program funding in an approved Annual Statement under the CGP, to the extent that the IHA can document that it is not possible to complete all the vacant unit rehabilitation in the IHA's approved Annual Statement, the IHA may seek and HUD may grant a waiver for 1 fiscal year to permit full PFS eligibility for those units approved but not funded.

PART 990—ANNUAL CONTRIBUTIONS FOR OPERATING SUBSIDY

9. The authority citation for part 990 would continue to read as follows:

Authority: 42 U.S.C. 1437g and 3535(d).

10. Section 990.102 would be amended by adding definitions for ''Long-term vacancy'', ''Units vacant due to circumstances and actions beyond the PHA's control'', and ''Vacant unit undergoing modernization''; by revising the definitions for ''Unit approved for deprogramming'' and ''Unit months available''; and by removing the definition for ''Vacant, On-Schedule Modernization Units'', to read as follows:

§ 990.102 Definitions.

* * * * *

Long-term vacancy. This term means the same as it is used in the definition of ''Unit Months Available'' in this section.

* * * * *

Unit approved for deprogramming. (1) A dwelling unit for which HUD has approved the PHA's formal request to remove the dwelling unit from the PHA's inventory and the Annual Contributions Contract but for which removal (i.e., deprogramming) has not yet been completed; or

(2) A nondwelling structure or a dwelling unit used for nondwelling purposes that the PHA has determined will no longer be used for PHA purposes and that HUD has approved for removal from the PHA's inventory and Annual Contributions Contract.

Unit months available. Project Units multiplied by the number of months the Project Units are available for occupancy during a given PHA fiscal year. For purposes of this part, a unit is considered available for occupancy from the date established as the End of the Initial Operating Period for the Project until the time the unit is approved by HUD for deprogramming and is vacated or is approved for nondwelling use. A unit will be considered a long-term vacancy and will not be considered available for occupancy in any given PHA Requested Budget Year if the PHA determines that:

(1) The unit has been vacant for more than 12 months at the time the PHA determines its Actual Occupancy Percentage;

(2) The unit is not either:

(i) A vacant unit undergoing modernization; or

(ii) A unit vacant for circumstances and actions beyond the PHA's control, as these terms are defined in this section; and

(3) The PHA determines that it will have a vacancy percentage of more than 3 percent and will have more than five vacant units, for its Requested Budget Year, even after adjusting for vacant units undergoing modernization and units that are vacant for circumstances and actions beyond the PHA's control, as defined in this section. (Reference in this part to ''more than five units'' or ''fewer than five units'' shall refer to a circumstance in which five units equals or exceeds 3 percent of the number of units to which the 3 percent threshold is applicable.)

Units vacant due to circumstances and actions beyond the PHA's control. Dwelling units that are vacant due to circumstances and actions that prohibit the PHA from occupying, selling, demolishing, rehabilitating, reconstructing, consolidating or modernizing vacant units and are beyond the PHA's control. For purposes of this definition, circumstances and actions beyond the PHA's control are limited to:

(1) *Litigation.* The effect of court litigation such as a court order or settlement agreement that is legally enforceable. An example would be units that are being held vacant as part of a court-ordered or HUD-approved desegregation plans.

(2) *Laws.* Federal or State laws of general applicability, or their implementing regulations. Units vacant only because they do not meet

minimum standards pertaining to construction or habitability under Federal, State, or local laws or regulations will not be considered vacant due to circumstances and actions beyond the PHA's control.

(3) *Changing market conditions.* For example, small PHAs that are located in areas experiencing population loss or economic dislocations may face a lack of demand in the foreseeable future, even after the PHA has taken aggressive marketing and outreach measures.

(4) *Natural disasters.*

(5) *Insufficient funding* for otherwise approvable applications made for Comprehensive Improvement Assistance Program (CIAP) funds.

(6) *RMC funding.* The failure of a PHA to fund an otherwise approvable RMC request for Federal modernization funding;

(7) *Casualty losses.* Delays in repairing damage to vacant units due to the time needed for settlement of insurance claims.

* * * * *

Vacant unit undergoing modernization. Except as provided in § 990.119(a), a vacant unit in an otherwise viable project (as determined using the indicia in § 970.6 of this chapter), when the project is undergoing modernization that includes work that is necessary to reoccupy the vacant unit, and in which one of the following conditions is met:

(1) The unit is under construction (i.e., the construction contract has been awarded or force account work has started); or

(2) The treatment of the vacant unit is included in a HUD-approved modernization budget (e.g., the Annual Statement for the Comprehensive Grant Program (CGP) (Form HUD–52837 or its successor), or the Comprehensive Improvement Assistance Program (CIAP) Budget (Form HUD–52825 or its successor)), but the time period for placing the vacant unit under construction has not yet expired. The PHA must place the vacant unit under construction within two Federal Fiscal Years (FFYs) after the FFY in which the modernization funds are approved.

11. Section 990.108 would be amended by revising paragraph (b), to read as follows:

§ 990.108 Other costs.

* * * * *

(b) (1) Costs attributable to units approved for deprogramming and vacant may be eligible for inclusion, but must be limited to the minimum services and protection necessary to protect and preserve the units until the units are deprogrammed. Costs attributable to units temporarily unavailable for occupancy because the units are utilized for PHA-related activities are not eligible for inclusion. In determining the PFS operating subsidy, these units shall not be included in the calculation of Unit Months Available. Units approved for deprogramming shall be listed by the PHA, and supporting documentation regarding direct costs attributable to such units shall be included as a part of the Performance Funding System calculation in which the PHA requests operating subsidy for these units. If the PHA requires assistance in this matter, the PHA should contact the HUD Field Office.

(2) Units approved for nondwelling use to promote economic self-sufficiency services and anti-drug activities are eligible for operating subsidy under the conditions provided in this paragraph (b)(2), and the costs attributable to these units are to be included in the operating budget. If a unit satisfies the conditions stated below, it will be eligible for subsidy at the rate of the AEL for the number of months the unit is devoted to such use. Approval will be given for a period of no more than 3 years. HUD may renew the approval to allow payments after that period only if the PHA can demonstrate that no other sources for paying the non-utility operating costs of the unit are available. The conditions the unit must satisfy are:

(i) The unit must be used for either economic self-sufficiency activities directly related to maximizing the number of employed residents or for anti-drug programs directly related to ridding the development of illegal drugs and drug-related crime. The activities must be directed toward and for the benefit of residents of the development.

(ii) The PHA must demonstrate that space for the service or program is not available elsewhere in the locality and that the space used is safe and suitable for its intended use or that the resources are committed to make the space safe and suitable.

(iii) The PHA must demonstrate satisfactorily that other funding is not available to pay for the non-utility operating costs. All rental income generated as a result of the activity must be reported as income in the operating subsidy calculation.

(iv) Operating subsidy may be approved for only one site (involving one or more contiguous units) per public housing development for economic self-sufficiency services or anti-drug programs, and the number of units involved should be the minimum necessary to support the service or program. Operating subsidy for any additional sites per development can only be approved by HUD Headquarters.

(v) The PHA must submit a certification with its Performance Funding System Calculation that the units are being used for the purpose for which they were approved and that any rental income generated as a result of the activity is reported as income in the operating subsidy calculation. The PHA must maintain specific documentation of the units covered. Such documentation should include a listing of the units, the street addresses, and project/management control numbers.

(3) Long-term vacant units that are not included in the calculation of Unit Months Available are eligible for operating subsidy in the Requested Budget Year at the rate of 20 percent of the AEL. Allowable utility costs for long term vacant units will continue to be funded in accordance with § 990.107.

* * * * *

12. In § 990.109, paragraph (b)(3) would be revised, to read as follows:

§ 990.109 Projected operating income level.

(b) * * *

(3) *Projected Occupancy Percentage*. The PHA shall determine its projected percentage of occupancy for all Project Units (Projected Occupancy Percentage), as follows:

(i) *General.* Using actual occupancy data collected before the start of the budget year as a beginning point, the PHA will develop estimates for its Requested Budget Year (RBY) of: how many units the PHA will have available for occupancy; how many of the available units will be occupied and how many will be vacant, and what the average occupancy percentage will be for the RBY. The conditions under which the RBY occupancy percentage will be used as the projected occupancy percentage for purposes of determining operating subsidy eligibility are described below.

(ii) *High Occupancy PHA—No Adjustments Necessary*. If the PHA's RBY Occupancy Percentage, calculated in accordance with § 990.117, is equal to or greater than 97%, the PHA's Projected Occupancy Percentage is 97%. If the PHA's RBY Occupancy Percentage is less than 97%, but the PHA demonstrates that it will have an average of five or fewer vacant units in the requested budget year, the PHA will use its RBY Occupancy Percentage as its projected occupancy percentage.

(iii) *Adjustments in Determining Occupancy*. If the PHA's RBY Occupancy Percentage is less than 97% and the PHA has more than 5 vacant

units, the PHA will adjust its estimate of vacant units to exclude vacant units undergoing modernization and units that are vacant due to circumstances and actions beyond the PHA's control. After making this adjustment, the PHA will recalculate its estimated vacancy percentage for the RBY.

(A) *High Occupancy PHA After Adjustment.* If the recalculated vacancy percentage is 3% or less (or the PHA would have five or fewer vacant units), the PHA will use its RBY Occupancy Percentage as its projected occupancy percentage.

(B) *Low Occupancy PHA—Adjustment for Long-Term Vacancies.* If the recalculated vacancy percentage is greater than 3% (or more than 5 vacant units), the PHA will then further adjust its RBY Occupancy Percentage by excluding from its calculation of Unit Months Available (UMAs), all units that have been vacant for longer than 12 months that are not vacant units undergoing modernization or are not units vacant due to circumstances and actions beyond the PHA's control.

(iv) *Low Occupancy PHA After All Adjustments.* A PHA that has determined its RBY Occupancy Percentage in accordance with paragraph (b)(iii)(B) of this section will be eligible for operating subsidy as follows:

(A) Long-term vacancies removed from the calculation of UMAs will be eligible to receive a reduced operating subsidy calculated at 20% of the PHA's AEL.

(B) If the recalculated RBY Occupancy Percentage is 97% or higher, the PHA will use 97%.

(C) If the recalculated RBY Occupancy Percentage is less than 97%, but the vacancy rate after adjusting for vacant units undergoing modernization and units that are vacant due to circumstances and actions beyond the PHA's control is 3% or less (or the PHA has five or fewer vacant units), the PHA may use its recalculated RBY Occupancy Percentage as its projected occupancy percentage.

(D) If the recalculated RBY Occupancy Percentage is less than 97% and the vacancy percentage is greater than 3% (or the PHA has more than five vacant units) after adjusting for vacant units undergoing modernization and units that are vacant due to circumstances and actions beyond the PHA's control, the PHA will use 97% as its projected occupancy percentage, but will be allowed to adjust the 97% by the number of vacant units undergoing modernization and units that are vacant due to circumstances and actions beyond the PHA's control. For a small PHA using five vacant units as its occupancy objective for the RBY, the PHA will determine what percentage five units represents as a portion of its units available for occupancy and subtract that percentage from 100%. The result will be used as the PHA's projected occupancy percentage, but the PHA will be allowed to adjust the projected occupancy percentage by vacant units undergoing modernization and units that are vacant for circumstances and actions beyond the PHA's control.

* * * * *

13. Section 990.117 would be revised to read as follows:

§ 990.117 Determining Actual and Requested Budget Year Occupancy Percentages.

(a) *Actual Occupancy Percentage.* When submitting Performance Funding System Calculations for Requested Budget Years beginning on or after January 1, 1996, the PHA shall determine an Actual Occupancy Percentage for all Project Units included in the Unit Months Available. The PHA shall have the option of basing this option on either:

(1) The number of units occupied on the last day of the month that ends 6 months before the beginning of the Requested Budget Year; or

(2) The average occupancy during the month ending 6 months before the beginning of the Requested Budget Year. If the PHA elects to use an average occupancy under this paragraph (a)(2), the PHA shall maintain a record of its computation of its Actual Occupancy Percentage.

(b) *Requested Budget Year Occupancy Percentage.* The PHA will develop a Requested Budget Year Occupancy Percentage by taking the Actual Occupancy Percentage and adjusting it to reflect changes up or down in occupancy during the Requested Budget Year due to HUD-approved activities such as units undergoing modernization, new development, demolition, or disposition. If after the submission and approval of the Performance Funding System Calculations for the Requested Budget Year, there are changes up or down in occupancy because of modernization, new development, demolition or disposition that are not reflected in the Requested Budget Year Occupancy Percentage, the PHA may submit a revision to reflect the actual change in occupancy due to these activities.

(c) *Documentation Required to be Maintained.* The PHA must maintain, and upon HUD's request, make available to HUD specific documentation of the occupancy status of all units, including long-term vacancies, vacant units undergoing modernization, and units vacant due to circumstances and actions beyond the PHA's control. This documentation shall include a listing of the units, street addresses, and project/management control numbers.

§ 990.118 [Removed and Reserved]

14. Section 990.118, Comprehensive Occupancy Plan Requirements, would be removed and reserved.

15. Section 990.119 would be revised to read as follows:

§ 990.119 Transition provisions.

(a) *Treatment of Units Already Under an Approved Modernization Budget.* Vacant units to be rehabilitated under modernization budgets approved in FFY 1995 or prior are subject to the modernization implementation schedule, without extension, previously approved by HUD. It is the intent of HUD not to penalize PHAs that have longer construction schedules in an approved modernization budget.

(b) *Treatment of Existing COPs.* (1) A PHA that on [effective date of final rule] is operating under a Comprehensive Occupancy Plan (COP) approved by HUD under § 990.118, as that section existed before [effective date of final rule] may, until the expiration of its COP, continue to determine its PFS eligibility under the provisions of part 990 effective on 1 day before effective date of final rule. If the PHA does not elect to continue to determine its PFS eligibility using its COP, the PHA's PFS eligibility will be calculated in accordance with this part.

(2) HUD will not approve any extensions of existing COPs.

16. A new § 990.121 would be added to subpart A, to read as follows:

§ 990.121 Waivers.

(a) *Documentation for Waiver.* A waiver may be granted in accordance with § 999.101 of this chapter. Any request for a waiver should include documentation that the PHA has made best efforts to correct the problems underlying its excess vacancies and could not correct the problems in a cost-effective manner.

(b) *Effect of Rescission.* If there is a rescission of appropriated funds that reduces the level of Comprehensive Grant Program funding in an approved Annual Statement under the CGP, to the extent that the PHA can document that it is not possible to complete all the vacant unit rehabilitation in the PHA's approved Annual Statement, the PHA may seek and HUD may grant a waiver for 1 fiscal year to permit full PFS

eligibility for those units approved but not funded.

Dated: June 27, 1995.

Joseph Shuldiner,

Assistant Secretary for Public and Indian Housing.

[FR Doc. 95–17810 Filed 7–18–95; 8:45 am]

BILLING CODE 4210–33–P

federal register

Wednesday
July 19, 1995

Part VI

Department of the Interior

Fish and Wildlife Service

50 CFR Part 36

Seasonal Closure of the O'Malley River Area in the Kodiak National Wildlife Refuge; Final Rule

DEPARTMENT OF THE INTERIOR

Fish and Wildlife Service

50 CFR Part 36

RIN 1018–AC49

Seasonal Closure of the O'Malley River Area in the Kodiak National Wildlife Refuge

AGENCY: Fish and Wildlife Service, Interior.

ACTION: Final rule.

SUMMARY: This rule closes a 2,560 acre area within the Kodiak National Wildlife Refuge (Refuge) to all public access, occupancy and use from June 25 through September 30 annually. This closure includes a portion of the O'Malley River drainage and adjacent Refuge lands bordering Karluk Lake and O'Malley Lake. The area is heavily used by Kodiak brown bears that concentrate along the O'Malley River from late June through October to feed on spawning salmon. Extensive research indicates that public use of the O'Malley area has increased to a level that is adversely affecting brown bears. The seasonal closure is necessary to protect brown bears and prevent incompatible conflicts between people and brown bears at an important bear concentration area.

EFFECTIVE DATE: August 18, 1995.

ADDRESSES: U.S. Fish and Wildlife Service, Kodiak National Wildlife Refuge, 1390 Buskin River Road, Kodiak, Alaska 99615.

FOR FURTHER INFORMATION CONTACT: Refer all questions to Jay Bellinger, Refuge Manager, at the address listed above; Telephone: (907) 487–2600.

SUPPLEMENTARY INFORMATION:

Background

President Franklin D. Roosevelt established the Kodiak National Wildlife Refuge by Executive Order 8857 on August 14, 1941, to ''preserve the natural feeding and breeding ground of the brown bear and other wildlife.'' This action withdrew about 1.9 million acres from unreserved public domain on Kodiak and Uganik Islands. Congress redesignated the Kodiak National Wildlife Refuge in 1980 when it enacted the Alaska National Interest Lands Conservation Act (ANILCA). All the lands, water, interests, and submerged lands retained in Federal ownership at the time of statehood were included in the refuge. This legislation also added about 50,000 acres of public lands on Afognak and Ban Islands to Kodiak National Wildlife Refuge. Section 303(5)(b) of ANILCA states the purposes for which the Refuge is established and shall be managed. The primary purpose and management priority of the Refuge is:

> ''* * * to conserve fish and wildlife populations and habitats in their natural diversity including, but not limited to, Kodiak brown bears, salmonoids, sea otters, sea lions, and other marine mammals and migratory birds.''

The Kodiak Refuge Comprehensive Conservation Plan (U.S. Fish and Wildlife Service, 1987) provides primary guidance for management of the Kodiak National Wildlife Refuge. According to its approved alternative, ''the Service will undertake detailed management planning to guide implementation of the plan and operation of the refuge.'' In compliance with that mandate, utilizing a full spectrum of public involvement, the Kodiak Refuge Public Use Management Plan (PUMP) was developed. This rule is a result of direction provided by both these planning processes.

The O'Malley River area in Kodiak National Wildlife Refuge contains crucial habitat for the world-renowned Kodiak brown bears. Bears concentrate along the O'Malley River from late June through October to feed on spawning salmon. The area supports about one third of the brown bears in the Karluk Lake Basin during this period. During the season of heavy bear use, many people also visit the area primarily to view and photograph the bears and/or to fish. This public use has steadily increased for many years.

In 1991, the Service began a study of brown bear use of the O'Malley area and potential impacts of public use on bears. This study documented detrimental impacts on bears in the O'Malley area resulting from the public uses in the area, indicating a need to regulate public uses. To provide viewing opportunities while reducing human-bear conflicts, the Refuge implemented, on a trial basis, a guided bear viewing program (BVP) in the O'Malley area in 1992. Structured BVPs have been used successfully elsewhere in Alaska as a conservation management tool and to enhance public use opportunities. On national wildlife refuges, such services are normally provided by commercial permittees. However, the Service operated the experimental O'Malley BVP to maintain full control over its development and to ensure the scientific integrity of the study. The Service was satisfied with the results of the trial BVP. The O'Malley BVP and public use closure were suspended in 1993. However, the bear study was continued to provide additional information on the impacts of unrestricted public use on the bears. The 1993 and 1994 study documented significant disturbance to feeding bears and confirmed the need to protect bears from rapidly growing and unrestricted public use.

The Service is committed to conserving healthy populations of Kodiak brown bears in their natural diversity, as this is a primary purpose for which the Refuge was established. The Service must manage public uses of the Refuge in a manner consistent with this purpose.

On May 11, 1994, the Service published an Interim Rule closing the O'Malley River area to public use from June 25–September 30, 1994, except for individuals participating in a refuge-sponsored bear viewing program (59 FR 24564). A proposed rule that would make the seasonal public use closure permanent was also published (59 FR 24567) concurrently with the Interim Rule. The Service reinstated the O'Malley BVP to provide controlled, low impact recreational opportunities, as an alternative to seasonal closure to all public use. The proposed and interim rules were subject to a 60 day public review.

In 1994, to reduce government costs and strengthen support from the private sector, the Service turned the bear viewing program over to a commercial operator, who provided the services through a special use permit issued by the Refuge. The operator, a long time Kodiak guide, was selected through a competitive selection process. In light of problems in the selection process and heavy public opposition to privatization of the O'Malley BVP, the Service canceled the program and revoked the Refuge permit in December 1994.

Summary of Public Comments

Six persons attended a public hearing on the interim and proposed rule held in Kodiak, Alaska on April 20, 1994. Concerns and comments were extracted from the administrative record of that hearing and evaluated by the Service.

The Service also received 36 letters and post cards containing written comments from individuals. Comments received over the telephone from one individual were also documented and considered. Of these responses from private individuals, 27 supported or conditionally supported the proposed rule, and 8 opposed it. In two cases, comments were ambiguous as to whether the person supported or opposed the proposed rule.

Nine environmental organizations and one sportsman's organization

commented on the proposed rule. Six of these private organizations opposed the proposed rule, and four provided support or conditional support for it. The Service also received written comments opposing the proposed rule from the State of Alaska, Kodiak Chamber of Commerce, and the Alaska Citizens Advisory Commission on Federal Areas.

Most public opposition and concerns with the proposed rule were directed at the privately operated bear viewing program and/or the continuation of bear hunting in the area. The Service reevaluated the proposed rule, in light of public comments and other concerns, and modified the final rule as follows:

(a) The Service eliminated the O'Malley BVP. The O'Malley area will now be closed to *all* public use from June 25–September 30.

(b) The area subject to this public use restriction has been reduced from 3,955 acres to 2,560 acres.

Analysis of Public Comments

(a) Objections to private operation of the bear viewing program:

Most comments in opposition to the proposed rule focused on the bear viewing program. Most commenters conceptually supported the need for reducing conflicts between people and brown bears and providing public bear viewing opportunities. However, there was considerable objection to the specific actions proposed and implemented by the Service at O'Malley. Common objections to the bear viewing program included:

(1) The Service issued a five year special use permit to a private businessman to operate the O'Malley BVP for personal profit, prior to the proposed rule.

(2) The permitted private operator of the O'Malley BVP also guides bear hunters on the Refuge, which raises conflict of interest and ethical concerns.

(3) The permittee pays a minimal fee to the Federal government to operate the bear viewing program, but charges the public $1,400 each to view bears on public lands.

(4) One permittee is allowed exclusive commercial use of the area.

(5) Costs charged to view bears are exorbitant and prohibitive to many people.

(6) The O'Malley BVP makes bears more familiar with, and therefore less afraid of, people. Such ''habituation'' to human presence may increase their vulnerability to bear hunting.

This rulemaking establishes a seasonal use restriction to protect bears. The O'Malley BVP was subjected to a full, but separate, public review and environmental assessment before the seasonal use restriction was published in the **Federal Register**. Though already established by separate action, the O'Malley BVP had to be considered in the proposed and interim rules because it created an exception to the general public use closure. Although public use restrictions are necessary to protect brown bears and maintain compatibility with Refuge purposes, the bear viewing program is not necessary to achieve these objectives. The Service intended the program to provide a quality wildlife viewing opportunity, as an alternative to a complete seasonal closure.

The decision to allow a private permittee to operate the O'Malley BVP was based largely on the high cost to taxpayers for the government to operate the program. Funds are not available for the Service to operate such programs without sacrificing higher priority resource management programs. Also, it is general Service policy to allow private operators, rather than the government, the opportunity to provide recreational services on refuges.

Public comments raised valid questions about the need, cost to the public and the Service, and impacts of the O'Malley BVP on bears and other recreational uses of the Refuge. Due to these and other concerns, the Service canceled the O'Malley BVP. This final rule now prohibits all public use in the O'Malley area during the season of important and concentrated bear activities.

(b) Comments that the seasonal closure is inadequate or inappropriate, since bear hunting is still allowed in area:

Next to the privatization of the O'Malley BVP, allowing bear hunting to continue in the area appeared to be the most contentious issue in the proposed rule. The proposed seasonal public use closure dates (June 25–September 30) will not effect brown bear hunting opportunities in the O'Malley area. Currently, spring bear season runs April 1–May 15, and fall season runs October 25–November 30. Several commenters voiced strong concerns that:

(1) The proposed rule restricts opportunities to view and photograph wildlife, and to participate in other non-consumptive activities, in order to protect bears from benign and incidental impacts, but then allows hunters to deliberately kill bears in the same area.

(2) Bears habituated to human presence in a bear viewing area are highly susceptible to hunting. Hunting such bears presents serious ethical problems and violates reasonable standards of fair chase.

(3) Bear hunting is inconsistent with other more appropriate public uses of an important bear viewing area.

The Service recognizes the potential problem of bears losing their fear of people wherever there is high public use in areas occupied by bears. The Service canceled the O'Malley BVP and, under this final rule, will close this important bear concentration area to all public use during the period of high bear activity. These actions should obviate the problems associated with hunting habituated bears.

The Service feels this closure includes the minimum area and time period necessary to protect bears. The closure dates include the period of highest concentrations and vulnerability of bears in the O'Malley area. During this period, the bears concentrate along the O'Malley River to feed on salmon. The four-year study of people-bear interactions in the O'Malley area indicated that, during the closure period, human activity disrupted feeding activities and displaced bears from the area. Continued disruption of bear feeding activities along the O'Malley River during the closure period may adversely affect their ability to accumulate the fat and protein reserves necessary for winter hibernation and reproduction. Bear hunting, which the Service has determined through a separate process to be compatible with Refuge purposes, does not occur during the critical period of heavy bear use.

(c) Comments on displacement of public use pressures and problems to other areas:

Some commenters stated that restricting public use from the O'Malley area would only displace public use pressure and associated problems to other areas. In a related concern, a few commenters stated that the Refuge needs a comprehensive system of multiple viewing areas and that this rule focuses too much attention on one small area.

The O'Malley closure will displace some public use pressure/problems to other areas. This rulemaking focuses on one area where a significant problem warranting immediate action has been documented. Public use has been rapidly increasing and commercial visitor service providers have been targeting the O'Malley area. The Kodiak PUMP more comprehensively addresses the issue of public use in bear concentration areas. It identifies other areas on the Refuge where bear viewing opportunities and potential problems exist. The Service will develop regulations to protect bear use of other critical areas, as identified in the PUMP.

For now, the Service intends to proceed with these regulations, which are necessary to protect bears using the O'Malley area. The Refuge will continue to monitor other brown bear concentration areas and limit public use, where necessary to protect bears.

(d) Concerns that closure to all public use is unnecessary:

Some commenters stated that the seasonal public use closure was excessive and/or unwarranted. Some recommended the Service consider alternatives that allow public use to continue, but in a manner not detrimental to resources of the area. Several commenters recommended limiting public use through a lottery or drawing permits, as an alternative to an expensive commercially operated bear viewing program. One commenter recommended providing all visitors with orientation and education materials to reduce human/bear conflicts.

Several years of research data reveal unrestricted public use at O'Malley is adversely affecting bear use of this area, indicating that public use restrictions are needed. The Service proposed allowing limited public use of the area through the Refuge-permitted O'Malley BVP, as an alternative to complete seasonal closure, but then canceled the BVP in light of problems in the selection process and heavy public criticism and opposition. Providing visitors with bear orientation and education materials will not, by itself, effectively alleviate the problems. Such materials are already available.

The Service agrees that a structured bear viewing program is not the only means of controlling public use of important bear habitat. In fact, the Kodiak PUMP addresses other means of regulating public uses of other important bear use areas (e.g., seasonal restrictions on overnight camping). The Service intends to proceed with public use closures or restrictions only as necessary to protect and conserve healthy populations of brown bears and other refuge wildlife resources.

(e) Comments about excessive area of restriction:

Some commenters stated that the area included in the O'Malley closure was larger than necessary to protect bears. Cancellation of the bear viewing program made it feasible to eliminate a safety buffer area and reduce the closure area by 36%, from about 3,955 acres to 2,560 acres. The Service considers the closure area delineated in this final rule the minimum size necessary to effectively protect bear use of the O'Malley area.

(f) Comments that justification for the restrictions was misleading and impacts were exaggerated or speculative:

Some commenters contended the justification or rationale for the public use restriction was misleading. They claimed it inappropriately implied that non-consumptive uses, such as wildlife viewing and photography, are causing adverse effects on bears, while ignoring impacts from hunting activities that will be allowed to continue. Some stated the impacts were exaggerated and/or speculative.

The proposed rule provided a simple summary and evaluation of extensive research data. The Service believes the impacts were accurately depicted. Formal research and general management experience with brown bears in the O'Malley River area clearly indicate that unrestricted human use is detrimental to the resource values of the Refuge.

The impacts of all public uses were evaluated. Though not clearly articulated in the rulemaking documents, impacts of all public uses were addressed in the environmental assessment (EA) and compatibility determination for the O'Malley BVP and the Kodiak PUMP. The EA for the O'Malley BVP and the Kodiak PUMP presented an evaluation of all public uses occurring in the area during the period of concentrated bear use. The Service did not intend to single out wildlife viewing and photography as the only public uses impacting bears. The decision to propose the closure was based upon the cumulative effect of all uses that occur during the period of heavy bear use. In regard to impacts on bears, the *period* of human use is just as important as the type of use. Unfortunately some uses, such as wildlife viewing and photography, occur predominately during the critical season of concentrated bear feeding activities. The data compiled indicated that this intrusion on the critical season of bear feeding *would* have a higher adverse impact on the bear population as a whole, as opposed to controlled hunting, because it would lessen the chances of their surviving the winter if the bears were not allowed to feed unmolested by the public. Hunting does not occur during the critical season of bear use and, as hunting is controlled, the take (and ultimate impact on the bear population) is predictable and designed to be biologically acceptable.

Paperwork Reduction Act

This rulemaking does not contain information collection requirements that require approval by the Office of Management and Budget under 44 U.S.C. 3501 *et seq.*

Environmental Considerations

The Final Public Use Management Plan and Environmental Assessment for Public Use Regulations for Kodiak National Wildlife Refuge was completed in October 1993, after a full public review process. It addresses the environmental considerations and need for the O'Malley seasonal public use closure, as well as for other important bear concentration areas. The environmental assessment for the Kodiak PUMP resulted in a Finding of No Significant Impact.

Economic Effect

Implementation of the rule will seasonally close slightly more than one tenth of one percent (0.13%) of Kodiak Refuge lands, to commercial operators and public use. Average use (commercial and non-commercial) of the O'Malley area was estimated at 266 user days during 1989 and 1990, and 353 user days during 1991. Most commercial use previously occurring in the closure area will be displaced to other locations and not lost to the local economy.

Changes in use of the resource will have no significant effect on national income. The public use closure will cause an insignificant impact on the local economy. Agency costs for monitoring the closure will be about $4,000 less than expended during fiscal year 1994 for monitoring the commercial bear viewing program, and about $40,000 less than expended during fiscal year 1992 for the Refuge to operate the program.

This rulemaking was not subject to Office of Management and Budget review under Executive Order 12866. In addition, a review under the Regulatory Flexibility Act of 1980 (5 U.S.C. 601 *et seq.*) has been done to determine whether the rulemaking would have a significant effect on a substantial number of small entities, which include businesses, organizations or governmental jurisdictions. This rule would have minimal effect on such entities. The Department of the Interior has determined this document is *not* a major rule.

List of Subjects in 50 CFR Part 36

Alaska, Recreation and recreation areas, Reporting and recordkeeping requirements, Wildlife refuges.

Accordingly, Part 36 of Chapter I of Title 50 of the Code of Federal Regulations is amended as follows:

PART 36—[AMENDED]

1. The authority citation for Part 36 continues to read as follows:

Authority: 16 U.S.C. 460(k) *et seq.*, 668dd *et seq.*, 742(a) *et seq.*, 3101 *et seq.*, and 44 U.S.C. 3501 *et seq.*

§ 36.39 [Amended]

2. § 36.39 *Public use* is amended by adding paragraph (j) to read as follows:

§ 36.39 Public use.

* * * * *

(j) *Kodiak National Wildlife Refuge*—(1) *Seasonal public use closure of the O'Malley River Area.* That area within the Kodiak National Wildlife Refuge described in this paragraph (j)(1) is closed to all public access, occupancy and use from June 25 through September 30. The area subject to seasonal closure consists of lands and waters located within Township 33 South, Range 30 West, Seward Meridian, Alaska, consisting of approximately 2,560 acres, and more particularly described as follows: Township 33 South, Range 30 West, Seward Meridian, Alaska, all of Section 25; all of Section 26, excluding U.S. Survey 10875 and the adjacent riparian ownership (Koniag Inc.) fronting the survey and extending to the center of Karluk Lake; and all of Sections 35 and 36, excluding U.S. Survey 10876 and the adjacent riparian ownership (Koniag Inc.) fronting the survey and extending to the center of Karluk Lake. Maps of the closure area are available from the Refuge.

(2) Access easement provision. Notwithstanding any other provision of this paragraph (j), there exists a twenty-five foot wide access easement on an existing trail within the Koniag Inc. Regional Native Corporation lands within properties described in paragraph (j)(1) of this section in favor of the United States of America.

Dated: July 7, 1995.

George T. Frampton, Jr.,

Assistant Secretary for Fish and Wildlife and Parks.

[FR Doc. 95–17741 Filed 7–18–95; 8:45 am]

BILLING CODE 4310–55–P

federal register

Wednesday
July 19, 1995

Part VII

Department of the Interior

Fish and Wildlife Service

50 CFR Part 20

Migratory Bird Hunting Supplemental Proposals for Migratory Game Bird Hunting Regulations; Meetings; Proposed Rule

DEPARTMENT OF THE INTERIOR

Fish and Wildlife Service

50 CFR Part 20

RIN: 1018-AC79

Migratory Bird Hunting; Supplemental Proposals for Migratory Game Bird Hunting Regulations; Notice of Meetings.

Editorial Note: The document set forth below was originally published at 60 FR 31890, June 16, 1995, and is being reprinted in its entirety because of typesetting errors.

AGENCY: Fish and Wildlife Service, Interior.

ACTION: Proposed rule; supplemental.

SUMMARY: The U.S. Fish and Wildlife Service (hereinafter the Service) proposed in an earlier document to establish annual hunting regulations for certain migratory game birds. This supplementary document further describes proposed changes from 1994–95 hunting regulations and provides additional information that will facilitate establishment of the 1995–96 hunting regulations. This document also announces the meetings of the Service Migratory Bird Regulations Committee.

DATES: The Service Migratory Bird Regulations Committee will meet to consider and develop proposed regulations for early seasons on June 20, 21, and 22, and for late seasons on August 1, 2, and 3. Public hearings on proposed early- and late-season frameworks will be held at 9:00 a.m. on June 22 and August 3, 1995, respectively. The comment period for proposed migratory bird hunting-season frameworks for Alaska, Hawaii, Puerto Rico, the Virgin Islands, and other early seasons will end on July 21, 1995, and for late-season proposals will end on September 4, 1995.

ADDRESSES: Meetings of the Service Migratory Bird Regulations Committee will be held in room 200 of the U.S. Fish and Wildlife Service's Arlington Square Building, 4401 N. Fairfax Drive, Arlington, Virginia. Public hearings will be held in the Auditorium of the Department of the Interior Building, 1849 C Street, NW., Washington, DC. Written comments on the proposals and notice of intention to participate in either hearing should be sent to the Chief, Office of Migratory Bird Management, U.S. Fish and Wildlife Service, Department of the Interior, ms 634—ARLSQ, 1849 C Street, NW., Washington, DC 20240. Comments received will be available for public inspection during normal business hours in room 634, ARLSQ Building, 4401 N. Fairfax Drive, Arlington, Virginia.

FOR FURTHER INFORMATION CONTACT: Paul R. Schmidt, Chief, Office of Migratory Bird Management, U.S. Fish and Wildlife Service, (703) 358–1714.

SUPPLEMENTARY INFORMATION:

Regulations Schedule for 1995

On March 24, 1995, the Service published in the **Federal Register** (60 FR 15642) a proposal to amend 50 CFR part 20. The proposal dealt with the establishment of seasons, limits, and other regulations for migratory game birds under §§ 20.101 through 20.107, 20.109, and 20.110 of subpart K. This document is the second in a series of proposed, supplemental, and final rules for migratory game bird hunting regulations. Comment periods on this second document are specified above under **DATES**. Early-season frameworks will be proposed in late June and late-season frameworks in early August. Final regulatory frameworks for early seasons are scheduled for publication on or about August 16, 1995, and those for late seasons on or about September 25, 1995.

On June 22, 1995, a public hearing will be held in Washington, DC, to review the status of migratory shore and upland game birds and waterfowl hunted during early seasons and the recommended hunting regulations for these species.

On August 3, 1995, a public hearing will be held in Washington, DC, to review the status of waterfowl and recommended hunting regulations for regular waterfowl seasons, and other species and seasons not previously discussed at the June 22 public hearing.

Announcement of Service Migratory Bird Regulations Committee Meetings

The meeting on June 20 is to review information on the current status of migratory shore and upland game birds and to develop 1995–96 migratory game bird regulations recommendations for these species plus regulations for migratory game birds in Alaska, Puerto Rico, and the Virgin Islands; special September waterfowl seasons in designated States; special sea duck seasons in the Atlantic Flyway; and extended falconry seasons. The June 21 meeting is to ensure that the Service's regulations recommendations are developed with the benefit of full consultation on the above issues.

The meeting on August 1 is to review information on the current status of waterfowl and to develop 1995–96 migratory game bird regulations recommendations for regular waterfowl seasons and other species and seasons not previously discussed at the early season meetings. The August 2 meeting is to ensure that the Service's regulations recommendations are developed with the benefit of full consultation on the above issues.

In accordance with Departmental policy regarding meetings of the Service Migratory Bird Regulations Committee that are attended by any person outside the Department, these meetings will be open to public observation. Members of the public may submit to the Director written comments on the matters discussed.

Announcement of Flyway Council Meetings

Service representatives will be present at the following meetings of Flyway Councils:

Atlantic Flyway—July 27–28, Charleston, West Virginia (Holiday Inn, Charleston House)

Mississippi Flyway—July 29–30, Green Bay, Wisconsin (Mid-way Best Western Motel)

Central Flyway—July 27–28, Custer, South Dakota (Blue Bell Lodge and Resort - Custer State Park)

Pacific Flyway—July 28, Reno, Nevada (Peppermill Hotel)

Although agendas are not yet available, these meetings usually commence at 8:30 a.m. on the days indicated.

Review of Public Comments

This supplemental rulemaking describes changes which have been recommended based on the preliminary proposals published on March 24, 1995, in the **Federal Register**. Only those recommendations that would require either new proposals or substantial modification of the preliminary proposals to facilitate effective public participation are included herein. Those that support or oppose but do not recommend alternatives to the preliminary proposals are not included, but will be considered later in the regulations-development process. The Service will publish responses to proposals, written comments, and public-hearing testimony when final frameworks are developed.

The Service seeks additional information and comments on the recommendations contained in this supplemental proposed rule. These recommendations and all associated comments will be considered during development of the final frameworks.

New proposals and modifications to previously described proposals are discussed below. Wherever possible, they are discussed under headings

corresponding to the numbered items in the March 24, 1995, **Federal Register**.

1. Ducks

The categories used to discuss issues related to duck harvest management are as follows: (A) General Harvest Strategy, (B) Framework Dates, (C) Season Length, (D) Closed Seasons, (E) Bag Limits, (F) Zones and Split Seasons, and (G) Special Seasons/Species Management. Only those categories containing substantial recommendations are included below.

A. General Harvest Strategy

In the March 24, 1995, **Federal Register**, the Service proposed that the choice of regulations frameworks for the 1995–96 regular duck season be limited to three sets of frameworks similar to those in effect during the 1979–93 hunting seasons. These three framework options were generally described as restrictive, moderate, or liberal. The Service also subsequently proposed in an information package made available on March 24, 1995, specific guidelines for selecting one of these framework packages based on the size of the mallard breeding population and habitat conditions in May 1995. The information package contained specific details of this year's proposed regulatory ''packages'' for each flyway, guidelines for the use of these regulatory packages, and a general description of the harvest management objective and duck population dynamics that were considered in the process. Based on public comments to date, the Service is continuing to refine the guidelines for the use of these regulatory packages and the specific details of the proposed packages for each flyway in this transition year to the Service's proposed development of a more formal and objective decision-making process.

All four Flyway Councils have endorsed the proposal to limit the choice of 1995–96 frameworks to three packages. However, the Pacific, Central, and Mississippi Flyway Councils recommended some modifications to the specific regulatory packages proposed, and these modifications are identified below under ''Framework Dates'', ''Season Length'', and ''Bag Limits.''

The Atlantic Flyway Council endorsed the guidelines proposed for selecting a regulations package in 1995, but commented that the guidelines were based only on mid-continent mallards, which comprise a very small portion of the duck harvest in the Atlantic Flyway. The Lower-Region Regulations Committee of the Mississippi Flyway Council also endorsed the guidelines. The Central Flyway Council and the Upper-Region Regulations Committee of the Mississippi Flyway Council expressed concerns about using the guidelines before the proposed general approach to managing duck harvests has been thoroughly reviewed by all interested parties. These concerns related only to the 1995–96 hunting season. The Pacific Flyway Council supported the general format of the guidelines, but expressed reservations about guidelines based upon mid-continent mallards and a harvest strategy that does not permit greater harvest opportunity on lightly-harvested species. Further, the Council urged development of a specific harvest strategy for pintails, the second-most important species in the Pacific Flyway harvest.

B. Framework Dates

In the frameworks packages proposed for 1995–96, the Pacific and Central Flyway Councils and the Upper-Region Regulations Committee of the Mississippi Flyway Council recommended that the framework opening and closing dates in all 3 packages be the Saturday nearest October 1 and the Sunday nearest January 20. The Lower-Region Regulations Committee of the Mississippi Flyway Council recommended that the opening and closing dates be the Saturday nearest October 1 and January 20 in all three packages.

C. Season Length

In the frameworks packages proposed for 1995–96, the Pacific Flyway Council recommended that in the ''restrictive'' package, the season length be 60 days instead of 59 days.

E. Bag Limits

In the frameworks packages proposed for 1995–96, the Pacific Flyway Council recommended that mallard daily bag limits be 5 (with 1 hen) instead of 4 (with 1 hen) in the ''moderate'' package and 6 (with 2 hens) instead of 6 (with 1 hen) in the ''liberal'' package. The Council also recommended that the pintail daily bag limit in the ''liberal'' package be 3 birds instead of 2.

The Central Flyway Council recommended reinstating the point-system option for establishing the daily bag limit for ducks in 1995. Further, the Council also would like to work with the Service in another cooperative review of its point-system policy.

F. Zones and Split Seasons

The Central Flyway Council recommended that the Service eliminate its policy that States may not zone and/or use a 3-way split season simultaneously within a special management unit and the remainder of the State when establishing duck hunting zones.

G. Special Seasons/Species Management

The Upper-Region Regulations Committee of the Mississippi Flyway Council recommended that during the first 9 days of the regular duck season, production States be given the option of 1 additional blue- or green-winged teal in the bag limit during a 3-year experimental period.

i. Canvasback

As part of the general harvest strategy, the Pacific Flyway Council recommended that limits on canvasbacks follow the Service's harvest strategy; however, the Council believes that canvasbacks should be managed by western and eastern populations.

ii. September Teal Seasons

The Central Flyway Council recommended that the September teal season in the Central Flyway be increased from 9 to 16 days.

4. Canada Geese

A. Special Seasons

The Atlantic Flyway Council recommended that Delaware and Rhode Island be permitted to initiate a 3-year experimental resident Canada goose season with framework dates of September 1 to 15.

The Atlantic Flyway Council also recommended that Massachusetts, New Jersey, New York, North Carolina, Pennsylvania, and Virginia be permitted to expand the hunt areas of their experimental goose seasons.

In North Carolina, the Atlantic Flyway Council requested that the framework date for the experimental resident Canada goose season in the Northeast hunt area be September 1 to 20.

The Upper-Region Regulations Committee of the Mississippi Flyway Council recommended modification of the early Canada goose seasons criteria to allow any State to conduct a non-experimental special season between the dates of September 1 and 15. The Committee recommended that States continue monitoring hunter activity and success until they begin participation in the Harvest Information Program and close areas where evidence from band recoveries or other sources indicated unacceptable (greater than 10 percent) harvest non-target populations of concern. Special seasons occurring after September 15 would be required to meet all existing Service criteria for special resident Canada goose seasons and would not be altered in any way during the 3-year experimental period.

If the above modifications to the special-season criteria are not approved,

the Upper-Region Regulations Committee recommended the following experimental special seasons:

In Indiana, a Statewide season during September 1 to 15.

In Illinois, a season in the nine northeast counties of the State during September 9 to 18.

In Wisconsin, expand the size of the Southeastern Zone for a September 1 to 13 season.

The Lower-Region Regulations Committee of the Mississippi Flyway Council recommended that the flyway-wide framework for special resident giant Canada goose seasons be September 1 to 15 where areas of concern do not exist.

In Tennessee, the Lower-Region Regulations Committee of the Mississippi Flyway Council recommended that the zone for the special resident Canada goose season in east Tennessee be expanded from 11 to 28 counties, east of and including Anderson, Campbell, Hamilton, Rhea, and Roane Counties. The Committee also recommended that Tennessee be permitted to hold a special September Canada goose season in the Kentucky/Barkley Lakes Zone in west Tennessee.

The Pacific Flyway Council requested modification of the early Canada goose seasons criteria to allow any State to conduct a season between the dates of September 1 and 15 for a 3-year experimental period. The Council recommended that States continue monitoring hunter activity and success until they begin participation in the Harvest Information Program and close areas where evidence from band recoveries or other sources indicated unacceptable (greater than 10 percent) harvest of non-target populations of concern. Special seasons occurring after September 15 would be required to meet all existing Service criteria for special Canada goose seasons and would not be altered in any way during the 3-year experimental period.

The Pacific Flyway Council recommended continuation of the early September Canada goose season in southwestern Wyoming and that an experimental hunt be allowed in Teton County, Wyoming, where it would be by State permit (no more than 40 permits may be issued) with framework dates of September 1 to 15 and a maximum limit of 2 Canada geese permitted per season.

B. Regular Seasons

The Upper-Region Regulations Committee of the Mississippi Flyway Council recommended a September 23 framework opening date for regular goose seasons in the Upper Peninsula of Michigan and Statewide in Wisconsin.

The Lower-Region Regulations Committee of the Mississippi Flyway Council recommended that the Canada goose hunting season in Louisiana be expanded from the Southwest Louisiana Zone to Statewide, using the same guidelines followed during the past 5 years.

The Pacific Flyway Council recommended a daily bag limit of 1 cackling Canada goose in northwestern Oregon and southwestern Washington. The Council recommends allowing one additional cackling Canada goose in the bag if additional Canada goose hunting season closures are required to further protect dusky Canada geese, however, and provided that the 1995 breeding pair index indicates a continued increase in the cackling Canada goose population and the strategy for harvesting not more than 1,500 in northwestern Oregon and 1,000 in southwestern Washington remains unchanged.

7. Snow and Ross's (Light) Geese

The Central Flyway Council recommended that framework dates for hunting light geese in the Central Flyway be extended to March 10.

8. Tundra Swans

The Pacific Flyway Council recommended a 5-year experimental swan season that would allow a restricted take of trumpeter swans in otherwise tundra swan hunting seasons, with the previous tundra swan seasons and areas open to hunting being modified to minimize the take of trumpeter swans. The Council seeks a responsible balance between its efforts to enhance expansion of the Rocky Mountain Population (RMP) of trumpeter swans and accommodate opportunities to hunt tundra swans.

The Pacific Flyway Council recommended changing the closing date for swan hunting seasons from the Sunday closest to January 20 to December 1 for Montana, the Sunday closest to December 15 for Utah, and the Sunday following January 1 for Nevada.

The Pacific Flyway Council also recommended changes to the swan hunt areas in Montana and Utah. In Montana, those portions of Pondera and Teton Counties west of U.S. Highways 287–89 would be deleted from the open area, while Choteau County would be added. Utah would be reduced from the Statewide hunt area that existed prior to 1994 to just the Great Salt Lake Basin, i.e., those portions of Box Elder, Weber, Davis, Salt Lake, and Tooele Counties bounded by Utah State Highway 30, Interstate 80/84, Interstate 15, and Interstate 80.

The Pacific Flyway Council also recommended that the number of swan permits remain unchanged at 500 for Montana and 650 for Nevada but increased from 2,500 to 2,750 for Utah. The Council deemed the increase in Utah permits as appropriate to partially offset anticipated reduction in swan hunting opportunities resulting from the recommended changes.

In addition to the foregoing changes, the Pacific Flyway Council proposed limiting the potential take of trumpeter swans by establishing a quota of 20 trumpeter swans which would be divided between Utah and Nevada prior to the season. A State season would be allowed, within the frameworks, so long as that quota had not been attained; however, the season would be closed through emergency action by the affected State upon attainment of that quota. To measure the take of trumpeters with respect to the quota, the Council recommended hunters in Utah and Nevada be required to participate in a mandatory parts check at designated sites within 72 hours of harvesting any swan. In Montana, where there would be no recommended quota, species composition of the harvest would be determined through the voluntary bill-measurement card program currently operated by the State.

Mr. Laurence N. Gillette, representing The Trumpeter Swan Society (TTSS), submitted an integrated package of recommendations for enhancing efforts to expand both the winter and summer range of RMP of trumpeter swans while allowing continuation of significantly modified tundra swan seasons in Montana, Utah, and Nevada. Dispersal of trumpeter swans from winter concentration areas in less-than-optimum, high-mountain habitats in the Tri-state Area of Montana, Wyoming, and Idaho is deemed of primary importance and, if accomplished, would likely result in trumpeter swans following tundra swan migration corridors through hunt areas in Utah and Nevada enroute to California.

Aside from recommendations regarding management actions directed only at RMP trumpeter swans, TTSS recommended that the Service minimize the mortality of trumpeters during tundra swan seasons by: (1) authorizing seasons only during times of peak tundra swan abundance when the generally later-arriving RMP trumpeter swans are less likely to be present and the ratio of tundra to trumpeters is highest, i.e., Montana and Utah - open early to mid-October and close by December 1, Nevada - open early to mid-October and close by January 1; (2) authorizing tundra swan hunting only

in key tundra swan hunting areas, i.e., Montana (Pacific Flyway portion) - Freezeout Lake and currently hunted areas east of U.S. Highway 287 between Augusta and Choteau and east of U.S. Highway 89 between Choteau and the Blackfeet Indian Reservation; Utah - Great Salt Lake Basin, specifically those portions of Box Elder, Weber, Davis, Salt Lake and Tooele Counties that lie south of Utah State Highway 30 and Interstate 84, west of Interstate 15, and north of Interstate 80; Nevada - same as in 1994 because swan hunting is currently restricted to concentration areas in western Nevada; and (3) identifying specific hunt management actions and prohibitions on the Bear River Migratory Bird Refuge in Utah.

Should the above three recommendations regarding tundra swan hunting be fully implemented, TTSS would not object to the Service authorizing an accidental harvest quota of not more than 25 trumpeter swans for the Pacific Flyway States and, thereby, removing liability from tundra swan hunters mistakenly shooting a trumpeter swan. The quota would be subject to the following: (1) the quota would be allocated prior to the season, (2) a State could optionally zone and allocate the quota among zones before the season, but the zone or entire Statewide hunt area will close immediately if the quota is attained, (3) require that swans be tagged immediately and brought in to be checked and measured within 3 days, and (4) each permittee must either check a tagged bird or submit an unused tag at the end of the season, with penalties for noncompliance. Specific efforts to monitor RMP trumpeter swans and to educate hunters were recommended.

Service Response: During 1994, the Service restricted the tundra swan season and hunt areas in Utah and required Montana, Utah, and Nevada to measure the accidental take, if any, of trumpeter swans during the tundra swan seasons. Pending reports on the occurrence and take of trumpeter swans in the hunt areas last year, possible additional changes may be warranted. The Service believes continued tundra swan hunting in these three States is warranted but that seasons may be modified to minimize, but not preclude, the accidental take of trumpeter swans. A general swan season with a limited, biologically acceptable, but very controlled take of trumpeter swans may be a feasible approach to accommodate management objectives for both species. Final decision on such an approach, however, will be deferred until the late-season final frameworks, when all public comment has been considered.

9. Sandhill Cranes

The Central Flyway Council recommended that the Wyoming sandhill crane hunting season be expanded to Park and Bighorn Counties.

The Pacific Flyway Council recommended following the management plan with respect to seasons on the Rocky Mountain Population of greater sandhill cranes. Pending final results of the March 1995 survey which should be available in June 1995, harvest guidelines would allow an open season in the States of Arizona, Colorado, Idaho, Montana, New Mexico, Utah, and Wyoming if the population is above 16,000 cranes; otherwise, there would be no open season. With an open season, there would be no change in frameworks.

14. Woodcock

The Atlantic Flyway Council recommended that woodcock season frameworks remain unchanged in the Eastern Region for 1995–96 unless adverse weather substantially depresses the breeding populations as measured by the 1995 Singing Ground Survey. The Council believes that population declines are attributed to habitat loss and degradation rather than due to current harvest levels.

18. Alaska

The Pacific Flyway Council recommended changes in bag and possession limits for ducks in Alaska. Specifically, the Council requested for the framework set and the combined moderate-liberal framework set, respectively, the following bag and possession limits: North Zone 8/24 or 10/30, Gulf Coast Zone 6/18 or 8/24, and Southeast, Pribilof/Aleutian, and Kodiak zones 5/15 or 7/21; pintail limits 2/4; and canvasback limits 2/4. Sea duck limits of 15/30 would be separate, with seasons to remain closed on spectacled and Steller's eiders.

20. Puerto Rico

Puerto Rico recommended that the daily bag limit for ducks be increased from 3 to 4 birds and that the daily bag limit for snipe be increased from 6 to 8 birds.

Public Comment Invited

The Service intends that adopted final rules be as responsive as possible to all concerned interests, and therefore desires to obtain for consideration the comments and suggestions of the public, other concerned governmental agencies, non-governmental organizations, and other private interests on these proposals. Such comments, and any additional information received, may lead to final regulations that differ from these proposals.

Special circumstances are involved in the establishment of these regulations which limit the amount of time that the Service can allow for public comment. Specifically, two considerations compress the time in which the rulemaking process must operate: (1) the need to establish final rules at a point early enough in the summer to allow affected State agencies to appropriately adjust their licensing and regulatory mechanisms; and (2) the unavailability, before mid-June, of specific, reliable data on this year's status of some waterfowl and migratory shore and upland game bird populations. Therefore, the Service believes that to allow comment periods past the dates specified is contrary to the public interest.

Comment Procedure

It is the policy of the Department of the Interior, whenever practical, to afford the public an opportunity to participate in the rulemaking process. Accordingly, interested persons may participate by submitting written comments to the Chief, Office of Migratory Bird Management, U.S. Fish and Wildlife Service, Department of the Interior, ms 634—ARLSQ, 1849 C Street, NW., Washington, DC 20240. Comments received will be available for public inspection during normal business hours at the Service's office in room 634, Arlington Square Building, 4401 N. Fairfax Drive, Arlington, Virginia. All relevant comments received during the comment period will be considered. The Service will attempt to acknowledge received comments, but substantive response to individual comments may not be provided.

NEPA Consideration

NEPA considerations are covered by the programmatic document,''Final Supplemental Environmental Impact Statement: Issuance of Annual Regulations Permitting the Sport Hunting of Migratory Birds (FSES 88–14),'' filed with EPA on June 9, 1988. Notice of Availability was published in the **Federal Register** on June 16, 1988 (53 FR 22582). The Service's Record of Decision was published on August 18, 1988 (53 FR 31341). Copies of these documents are available from the Service at the address indicated under the caption **ADDRESSES.**

Endangered Species Act Consideration

As in the past, hunting regulations this year will be designed, among other

things, to remove or alleviate chances of conflict between seasons for migratory game birds and the protection and conservation of endangered and threatened species. Consultations are presently under way to ensure that actions resulting from these regulatory proposals will not likely jeopardize the continued existence of endangered or threatened species or result in the destruction or adverse modification of their critical habitat. It is possible that the findings from the consultations, which will be included in a biological opinion, may cause modification of some regulatory measures proposed in this document. Any modifications will be reflected in the final frameworks. The Service's biological opinions resulting from its consultation under Section 7 are considered public documents and are available for public inspection in the Division of Endangered Species and the Office of Migratory Bird Management, U.S. Fish and Wildlife Service, Arlington Square Building, 4401 N. Fairfax Drive, Arlington, Virginia.

Regulatory Flexibility Act; Executive Order (E.O.) 12866 and the Paperwork Reduction Act

In the **Federal Register** dated March 24, 1995 (60 FR 15642), the Service reported measures it had undertaken to comply with requirements of the Regulatory Flexibility Act and the Executive Order. These included preparing an Analysis of Regulatory Effects and an updated Final Regulatory Impact Analysis (FRIA), and publication of a summary of the latter. Although a FRIA is no longer required, the economic analysis contained in the FRIA was reviewed and the Service determined that it met the requirements of E.O. 12866. However, the Service is currently preparing a Small Entity Flexibility Analysis, under the Regulatory Flexibility Act (5 U.S.C. 601 et seq), to further document the significant beneficial economic effect on a substantial number of small entities. This rule was not subject to review by the Office of Management and Budget (OMB) under E.O. 12866.

These proposed regulations contain no information collections subject to OMB review under the Paperwork Reduction Act of 1980 (44 U.S.C. 3501 *et seq.*). However, the Service does utilize information acquired through other various information collections in the formulation of migratory game bird hunting regulations. These information collection requirements have been approved by OMB and assigned clearance numbers 1018–0005, 1018–0006, 1018–0008, 1018–0009, 1018–0010, 1018–0015, 1018–0019, and 1018–0023.

Authorship

The primary authors of this proposed rule are Ron W. Kokel and Patricia R. Hairston, Office of Migratory Bird Management.

List of Subjects in 50 CFR part 20

Exports, Hunting, Imports, Reporting and recordkeeping requirements, Transportation, Wildlife.

The rules that eventually will be promulgated for the 1995–96 hunting season are authorized under the Migratory Bird Treaty Act (July 3, 1918), as amended, (16 U.S.C. 703–711); the Fish and Wildlife Improvement Act (November 8, 1978), as amended, (16 U.S.C. 712); and the Fish and Wildlife Act of 1956 (August 8, 1956), as amended, (16 U.S.C. 742 a–d and e–j).

Dated: June 5, 1995.

George T. Frampton, Jr.,

Assistant Secretary for Fish and Wildlife and Parks.

[FR Doc. 95–14756 Filed 6–15–95; 8:45 am]

BILLING CODE 4310–55–F

Editorial Note: This document was originally published at 60 FR 31890, June 16, 1995, and is being reprinted in its entirety because of typesetting errors.

federal register

Wednesday
July 19, 1995

Part VIII

The President

Proclamation 6810—Captive Nations Week, 1995

Federal Register
Vol. 60, No. 138
Wednesday, July 19, 1995

Presidential Documents

Title 3—

The President

Proclamation 6810 of July 17, 1995

Captive Nations Week, 1995

By the President of the United States of America

A Proclamation

As we mark the 36th observance of ''Captive Nations Week,'' Americans reflect on the sorrow of peoples throughout the world who are physically and spiritually oppressed by their governments. In our hearts, we know that the ongoing struggle for individual liberty is part of a larger cause—an international quest for true peace. Recent years have seen great progress in the global march toward freedom. But far too many of humanity's children still live in fear.

Our commemoration of this week reflects the concern of Americans for all of those in need. Having sustained the promise of democracy for more than 200 years, we understand its many blessings and its profound importance in the world. While we celebrate the triumph of democratic governments in nations around the globe, we stay bound to those who remain prisoners of violence, poverty, and prejudice. As beneficiaries of freedom's power, we must champion their struggle, promoting respect for human dignity everywhere on Earth.

Stripped of fundamental personal rights and barred from realizing their political voice, the captive citizens of authoritarian regimes share our people's dreams of happiness. Today, in nations of the former Soviet bloc and from Asia to Africa to Latin America, our new democratic friends are acting on their hopes for opportunity and prosperity, recognizing that respect for individual freedom is the key to internal and international stability. America plays a vital role in this process of growth and change. As President John F. Kennedy said years ago, our ''historic task in this embattled age is not merely to defend freedom. It is to extend its writ and strengthen its covenant.'' We Americans have an enormous stake in the fate of captive nations. Their future is no less than our greatest hope for peace.

The Congress, by Joint Resolution approved July 17, 1959 (73 Stat. 212), has authorized and requested the President to issue a proclamation designating the third week in July of each year as ''Captive Nations Week.''

NOW, THEREFORE, I, WILLIAM J. CLINTON, President of the United States of America, do hereby proclaim July 16 through July 22, 1995, as Captive Nations Week. I call upon the people of the United States to observe this week with appropriate ceremonies and activities, rededicating ourselves to the principles of freedom and justice on which this Nation was founded and by which it will ever endure.

IN WITNESS WHEREOF, I have hereunto set my hand this seventeenth day of July, in the year of our Lord nineteen hundred and ninety-five, and of the Independence of the United States of America the two hundred and twentieth.

William J. Clinton

[FR Doc. 95–17949
Filed 7–17–95; 4:43 pm]
Billing code 3195–01–P

Reader Aids

Federal Register

Vol. 60, No. 138

Tuesday, July 19, 1995

INFORMATION AND ASSISTANCE

Federal Register

Index, finding aids & general information	**202–523–5227**
Public inspection announcement line	**523–5215**
Corrections to published documents	**523–5237**
Document drafting information	**523–3187**
Machine readable documents	**523–4534**

Code of Federal Regulations

Index, finding aids & general information	**523–5227**
Printing schedules	**523–3419**

Laws

Public Laws Update Service (numbers, dates, etc.)	**523–6641**
Additional information	**523–5230**

Presidential Documents

Executive orders and proclamations	**523–5230**
Public Papers of the Presidents	**523–5230**
Weekly Compilation of Presidential Documents	**523–5230**

The United States Government Manual

General information	**523–5230**

Other Services

Data base and machine readable specifications	**523–4534**
Guide to Record Retention Requirements	**523–3187**
Legal staff	**523–4534**
Privacy Act Compilation	**523–3187**
Public Laws Update Service (PLUS)	**523–6641**
TDD for the hearing impaired	**523–5229**

ELECTRONIC BULLETIN BOARD

Free **Electronic Bulletin Board** service for Public Law numbers, Federal Register finding aids, and list of documents on public inspection. **202–275–0920**

FAX-ON-DEMAND

You may access our Fax-On-Demand service. You only need a fax machine and there is no charge for the service except for long distance telephone charges the user may incur. The list of documents on public inspection and the daily Federal Register's table of contents are available using this service. The document numbers are 7050-Public Inspection list and 7051-Table of Contents list. The public inspection list will be updated immediately for documents filed on an emergency basis.

NOTE: YOU WILL ONLY GET A LISTING OF DOCUMENTS ON FILE AND NOT THE ACTUAL DOCUMENT. Documents on public inspection may be viewed and copied in our office located at 800 North Capitol Street, N.W., Suite 700. The Fax-On-Demand telephone number is: **301–713–6905**

FEDERAL REGISTER PAGES AND DATES, JULY

34453–34842 3
34843–35112 5
35113–35320 6
35321–35460 7
35461–35690 10
35691–35828 11
35829–36026 12
36027–36202 13
36203–36338 14
36339–36634 17
36635–36950 18
36951–37322 19

CFR PARTS AFFECTED DURING JULY

At the end of each month, the Office of the Federal Register publishes separately a List of CFR Sections Affected (LSA), which lists parts and sections affected by documents published since the revision date of each title.

3 CFR

Administrative Orders:

Memorandums:
June 29, 1995 35113

Presidential Determinations:
No. 95–27 of June 23, 1995 35461
No. 95–28 of June 23, 1995 35463
No. 95–29 of June 28, 1995 35465
No. 95–31 of July 2, 1995 35827

Executive Orders:
12966 36949

Proclamations:
6810 37321

4 CFR

28 35115
29 35115

5 CFR

213 35119
316 35119
532 ..... 35467, 36203, 36204
575 35601
581 35468
1601 36630

Proposed Rules:
532 36238
550 35342

7 CFR

29 36027
201 35829
360 35831
457 35832
868 ..... 36028, 36030
920 36032
921 36204
945 36339
956 34843
958 34453
989 36951
998 ..... 36205, 36635
1205 36033
1446 35834
1718 36882
1955 34454
2812 34456

Proposed Rules:
1 34474
47 34474
319 ..... 34832, 35712, 35871
1004 36239
1493 37025
1710 36904
1717 36904
1718 36904

9 CFR

Proposed Rules:
82 35343
101 36743
113 36743
145 35343
147 35343

10 CFR

19 36038
20 36038
50 36953
451 36959
515 35321
1008 35835

Proposed Rules:
61 36744
430 36745

11 CFR

100 35292
106 35292
109 35292
114 35292

12 CFR

22 35286
30 35674
208 ..... 35286, 35674
225 35120
263 35674
303 35674
308 35674
339 35286
360 35487
364 35674
563 35286
570 35674
614 35286
760 35286
937 36966
939 36966

Proposed Rules:
20 34907
21 34476
28 34907
30 35688
34 35353
208 ..... 34481, 35688
211 34481
225 34481
309 35148
346 36074
364 35688
563 36366
570 35688

14 CFR

25 ..... 36967, 36969
39 ..... 34844, 35322, 35323, 35324, 35326, 35328, 35452, 36971, 36972, 36974, 36976,

36981, 36983, 36984, 36986
71 .....34845, 35330, 35331, 35332, 35333, 36340, 36341, 36342, 36343, 36344, 36345, 36346, 36637
95.....36637
97 .....36346, 36349, 36350
Proposed Rules:
Ch. I 36746
25.....36832
39 .....35873, 35877, 36078, 36748, 36749, 37037, 37038
43.....36926
71 .....36370, 36371, 36372, 36373, 36462, 36751
121.....36932
234.....35158

15 CFR

799.....36638

16 CFR

Proposed Rules:
436.....34485
1500.....34922
1507.....34922

17 CFR

30.....34458
231.....35663
Proposed Rules:
210.....35656
228 .....35604, 35633, 35656
229.....35604, 35633
230 .....35604, 35638, 35642, 35645, 35648
232.....35648
239.....35604, 35656
240 .....35604, 35633, 35642
249 .....35604, 35633, 35642, 35656
260.....35642

18 CFR

Proposed Rules:
35.....36752
284.....35522

19 CFR

4.....35837
141 to 199 35122
Proposed Rules:
102.....35878
133.....36249
162.....35881

21 CFR

5.....36582
25.....36582
102.....34459
170.....36582
171.....36582
174.....36582
510.....35122, 35838
522.....35122, 35123
558.....34460
892.....36639
1301.....36640
1306.....36640
1309.....35264, 36334
1313.....35264, 36334
1316.....35264, 36334
Proposed Rules:
314.....34486
872.....35713

22 CFR

42.....35838
211.....36990

23 CFR

630.....36991
645.....34846
1204.....36641

24 CFR

92.....36020
200.....35691
572.....36016
791.....35123
882.....34660
887.....34660
905.....35691
941.....35691
950.....36666
968.....35691
982.....34660
983.....34660
Proposed Rules:
92.....36012
950.....37294
990.....37294

25 CFR

Proposed Rules:
Ch. I 34488

26 CFR

1 .....36669, 36671, 36993, 36995
602.....36671, 36995
Proposed Rules:
1.....35882, 36755
18.....35882
301.....36756

28 CFR

0.....35334, 36710

29 CFR

1915.....36043
1926.....36043
1960.....34851
2610.....36208
2619.....36210
2622.....36208
2627.....36998
2676.....36210
2644.....36212
Proposed Rules:
9.....36756
2628.....35308

30 CFR

Ch. II 36711
18.....35692
19.....35692
20.....35692
22.....35692
27.....35692
28.....35692
35.....35692
36.....35692
50.....35692
56.....35692
57.....35692
70.....35692
71.....35692
74.....35692
77.....35692
90.....35692
913.....35696, 35697
925.....36044
926.....36998
934.....36213
935.....36352
944.....37002
Proposed Rules:
920.....36080
944.....35158
948.....34934

31 CFR

321.....35126

32 CFR

290.....35699
311.....36050
341.....35839
806b.....36224
Proposed Rules:
57.....36081

33 CFR

100 .....35699, 36355, 36356
117.....36357, 36359
162.....35701
165.....35702
Proposed Rules:
165.....36374
320.....37280
326.....37280
331.....37280

34 CFR

200.....34800
201.....34800
203.....34800
205.....34800
212.....34800
263.....35111
Ch. XI.....35798
1100.....35798

36 CFR

5.....35839
7.....35839, 36224
68.....35842
701.....34852
Proposed Rules:
7.....35887
13.....36082
215.....36767
217.....36767
219.....36767

37 CFR

1.....36492
3.....36492
Proposed Rules:
201.....35522
202.....35522

38 CFR

4.....37012

39 CFR

111.....34854
265.....36711
Proposed Rules:
111.....36179, 36376

40 CFR

9.....34582, 35452
52 .....34856, 34859, 34867, 36051, 36060, 36063, 36065, 36225, 36227, 36361, 36715, 36722, 36723, 37013, 37015
60.....35452
70 .....35335, 36065, 36070
80.....35488
81.....34461, 34859
90.....34582
180 .....34868, 34869, 34871, 34874, 34876, 35844, 36729, 37019, 37020
185.....34876
186.....34876
260.....35452
262.....35452
264.....35452, 35703
265.....35452, 35703
270.....35452
271 .....35452, 35703, 36731
281.....34879
302.....35492, 35991
355.....35991
436.....35796
704.....34462
707.....34462
712.....34462, 34879
716.....34462, 34879
720.....34462
721.....34462
723.....34462
761.....34462
763.....34462
766.....34462
790.....34462
795.....34462
796.....34462
799.....34462
Proposed Rules:
52 .....34488, 34938, 35361, 35531, 35535, 36082, 36252, 36377, 36768, 37040
63.....34938
70 .....34488, 34493, 35538, 36083
80.....34940
140.....34940
180 .....34943, 34945, 35365, 36768
261.....36377
264.....35718
265.....35718
271.....36377
300.....35160, 36770
302.....36377
430.....34938
439.....35367

41 CFR

101–47.....35706

42 CFR

3.....36072
6.....36073
50.....35810
51g.....36072
110.....36072
410.....36733
414.....35492, 36733
417.....34885
433.....35498
Proposed Rules:
52b.....35266
405.....35544

43 CFR

Public Land Order:
7147.....36736

7148 36736

44 CFR

65 ....34888, 34889, 35276
67 34891

Proposed Rules:

67 34947
1160 35162

45 CFR

94 35810
96 36334

Proposed Rules:

57a 36093

47 CFR

0 ....34901, 35503
1 ....34902, 36736
2 35507
21 ....36524, 36737
63 35507
64 35846
73 ....35338, 35339, 35340, 35512, 36230, 36231
76 35854
80 35507
90 ....35507, 37152

Proposed Rules:

2 35166
15 35166
22 36772
25 35166
32 35548
36 35548
64 ....35368, 37041
73 ....34959, 35369, 35372, 35548, 36378, 36772, 37041, 37042
87 35166
90 ....35719, 36772, 37148
94 36772

48 CFR

1 ....34732, 34733, 34735
2 ....34732, 34735, 34741
3 ....34732, 34741
4 ....34732, 34735, 34741
5 ....34732, 34735, 34741
6 ....34732, 34741
7 ....34732, 34735
8 ....34732, 34735, 34741
9 ....34732, 34735, 34741
12 ....34732, 34735
13 ....34732, 34741
14 ....34732, 34735
15 ....34732, 34735, 34741
16 ....34732, 34735, 34741
19 ....34732, 34735, 34741
20 ....34732, 34735, 34741
22 ....34732, 34741
23 ....34732, 34741
25 ....34732, 34735, 34741
27 ....34732, 34741
28 ....34732, 34735, 34741
29 34741
32 ....34732, 34735, 34741
33 34732
36 ....34732, 34735, 34741
41 ....34732, 34741
42 ....34732, 34741
43 ....34732, 34741
44 ....34732, 34741
45 ....34732, 34735, 34741
46 ....34732, 34741
47 ....34732, 34741
49 ....34732, 34741
52 ....34732, 34735, 34741
53 ....34732, 34735, 34741
204 34467
215 34467
217 34467
219 35668
225 ....34470, 34471
243 34467
252 ....34471, 35668
253 35868
Ch. 1 37292
Ch. 3 36740

Proposed Rules:

32 35454
52 35454
206 34497
207 34497
225 34497
1552 35719
5446 35720
5452 35720

49 CFR

541 36231
571 ....35126, 36741
573 35458
576 35458
577 35458

Proposed Rules:

195 35549
225 34498
571 ....35169, 35373, 35889, 36253, 36378, 37042
573 35459
575 ....34961, 36255
576 35459
577 35459

50 CFR

17 36000
36 37308
301 ....34472, 36364
630 ....35340, 35869
644 35340
645 35340
650 35513
651 35513
653 35340
663 ....34472, 37022
669 35340
672 ....35146, 35711, 35870, 36236, 36237
675 34904
677 34904
678 ....35340, 37023

Proposed Rules:

17 ....35374, 36380, 36382
18 36382
20 37314
32 ....36196, 36200
36 ....36093, 36576
216 37043
228 35891
229 37043
Ch. VI 37044
635 34965
638 36093
661 37045