7–5–95
Vol. 60 No. 128
Pages 34843–35112

federal register

Wednesday
July 5, 1995

Briefings on How To Use the Federal Register
For information on briefing in Washington, DC, see announcement on the inside cover of this issue.

FEDERAL REGISTER Published daily, Monday through Friday, (not published on Saturdays, Sundays, or on official holidays), by the Office of the Federal Register, National Archives and Records Administration, Washington, DC 20408, under the Federal Register Act (49 Stat. 500, as amended; 44 U.S.C. Ch. 15) and the regulations of the Administrative Committee of the Federal Register (1 CFR Ch. I). Distribution is made only by the Superintendent of Documents, U.S. Government Printing Office, Washington, DC 20402.

The **Federal Register** provides a uniform system for making available to the public regulations and legal notices issued by Federal agencies. These include Presidential proclamations and Executive Orders and Federal agency documents having general applicability and legal effect, documents required to be published by act of Congress and other Federal agency documents of public interest. Documents are on file for public inspection in the Office of the Federal Register the day before they are published, unless earlier filing is requested by the issuing agency.

The seal of the National Archives and Records Administration authenticates this issue of the **Federal Register** as the official serial publication established under the Federal Register Act. 44 U.S.C. 1507 provides that the contents of the **Federal Register** shall be judicially noticed.

The **Federal Register** is published in paper, 24x microfiche and as an online database through *GPO Access*, a service of the U.S. Government Printing Office. The online database is updated by 6 a.m. each day the **Federal Register** is published. The database includes both text and graphics from Volume 59, Number 1 (January 2, 1994) forward. It is available on a Wide Area Information Server (WAIS) through the Internet and via asynchronous dial-in. The annual subscription fee for a single workstation is $375. Six-month subscriptions are available for $200 and one month of access can be purchased for $35. Discounts are available for multiple-workstation subscriptions. To subscribe, Internet users should telnet to swais.access.gpo.gov and login as newuser (all lower case); no password is required. Dial-in users should use communications software and modem to call (202) 512–1661 and login as swais (all lower case); no password is required; at the second login prompt, login as newuser (all lower case); no password is required. Follow the instructions on the screen to register for a subscription for the **Federal Register** Online via *GPO Access.* For assistance, contact the *GPO Access* User Support Team by sending Internet e-mail to help@eids05.eids.gpo.gov, or a fax to (202) 512–1262, or by calling (202) 512–1530 between 7 a.m. and 5 p.m. Eastern time, Monday through Friday, except Federal holidays.

The annual subscription price for the **Federal Register** paper edition is $494, or $544 for a combined **Federal Register**, Federal Register Index and List of CFR Sections Affected (LSA) subscription; the microfiche edition of the **Federal Register** including the Federal Register Index and LSA is $433. Six month subscriptions are available for one-half the annual rate. The charge for individual copies in paper form is $8.00 for each issue, or $8.00 for each group of pages as actually bound; or $1.50 for each issue in microfiche form. All prices include regular domestic postage and handling. International customers please add 25% for foreign handling. Remit check or money order, made payable to the Superintendent of Documents, or charge to your GPO Deposit Account, VISA or MasterCard. Mail to: New Orders, Superintendent of Documents, P.O. Box 371954, Pittsburgh, PA 15250–7954.

There are no restrictions on the republication of material appearing in the **Federal Register.**

How To Cite This Publication: Use the volume number and the page number. Example: 60 FR 12345.

SUBSCRIPTIONS AND COPIES

PUBLIC

Subscriptions:

Paper or fiche	**202–512–1800**
Assistance with public subscriptions	**512–1806**

Online:

Telnet swais.access.gpo.gov, login as newuser <enter>, no password <enter>; or use a modem to call (202) 512–1661, login as swais, no password <enter>, at the second login as newuser <enter>, no password <enter>.

Assistance with online subscriptions	**202–512–1530**

Single copies/back copies:

Paper or fiche	**512–1800**
Assistance with public single copies	**512–1803**

FEDERAL AGENCIES

Subscriptions:

Paper or fiche	**523–5243**
Assistance with Federal agency subscriptions	**523–5243**

For other telephone numbers, see the Reader Aids section at the end of this issue.

THE FEDERAL REGISTER

WHAT IT IS AND HOW TO USE IT

FOR: Any person who uses the Federal Register and Code of Federal Regulations.

WHO: The Office of the Federal Register.

WHAT: Free public briefings (approximately 3 hours) to present:

1. The regulatory process, with a focus on the Federal Register system and the public's role in the development of regulations.
2. The relationship between the Federal Register and Code of Federal Regulations.
3. The important elements of typical Federal Register documents.
4. An introduction to the finding aids of the FR/CFR system.

WHY: To provide the public with access to information necessary to research Federal agency regulations which directly affect them. There will be no discussion of specific agency regulations.

WASHINGTON, DC

WHEN: July 27 at 9:00 am

WHERE: Office of the Federal Register Conference Room, 800 North Capitol Street NW., Washington, DC (3 blocks north of Union Station Metro)

RESERVATIONS: 202–523–4538

Printed on recycled paper containing 100% post consumer waste

Contents

Federal Register

Vol. 60, No. 128

Wednesday, July 5, 1995

Administrative Conference of the United States
NOTICES
Meetings:
Adjudication and Government in the Sunshine Act Special Review Committees, 34966

Agricultural Marketing Service
RULES
Sweet onions grown in Washington and Oregon, 34843–34844

Agriculture Department
See Agricultural Marketing Service
See Grain Inspection, Packers and Stockyards Administration
See Natural Resources Conservation Service

Children and Families Administration
NOTICES
Agency information collection activities under OMB review, 35037–35038

Civil Rights Commission
NOTICES
Meetings; Sunshine Act, 35109

Commerce Department
See International Trade Administration
See National Oceanic and Atmospheric Administration
NOTICES
Agency information collection activities under OMB review, 34967, 34970

Committee for the Implementation of Textile Agreements
NOTICES
Cotton, wool, and man-made textiles:
Jamaica, 34970–34971
Korea, 34971
Romania, 34971–34972
Taiwan, 34972
Special access and special regime programs; participation denial:
Block Industries, 34972–34973

Comptroller of the Currency
PROPOSED RULES
Federal branches and agencies of foreign banks:
International operations of national and foreign banks, 34907–34922

Consumer Product Safety Commission
PROPOSED RULES
Hazardous substances:
Multiple tube mine and shell fireworks devices, 34922–34934

Customs Service
NOTICES
Generalized System of Preferences; expiration procedures, 35103–35104
Reconciliation for adjustments made to price of imported merchandise by related party companies; test, 35105–35108
Senior Executive Service:
Performance Review Boards; membership, 35104–35105

Defense Department
See Navy Department

Drug Enforcement Administration
NOTICES
Schedules of controlled substances; production quotas:
Schedules I and II—
1995 aggregate, 35050–35052

Education Department
RULES
Elementary and secondary education:
Indian fellowship and professional development programs
Correction, 35111
NOTICES
Agency information collection activities under OMB review, 34974–34976

Energy Department
See Federal Energy Regulatory Commission

Environmental Protection Agency
RULES
Air quality implementation plans; approval and promulgation; various States; air quality planning purposes; designation of areas:
North Carolina, 34867
Air quality implementation plans; approval and promulgation; various States:
Indiana, 34856–34859
North Carolina, 34859–34867
Hazardous waste:
State underground storage tank program approvals—
Connecticut, 34879
Pesticides; tolerances in food, animal feeds, and raw agricultural commodities:
6-Benzyladenine, 34868–34869
Benzoic acid; correction, 34874
Cyfluthrin, 34874–34876
Lambda cyhalothrin, 34876–34879
O-[2-(1,1-dimethylethyl)-5-pyrimidinyl]O-ethyl-O-(1-methylethyl) phosphorothioate, 34871–34874
Potassium oleate, etc., 34869–34871
Toxic substances:
Preliminary assessment information and health and safety data reporting rules—
List additions, 34879–34885
PROPOSED RULES
Air quality implementation plans; approval and promulgation; various States:
Indiana, 34938
Clean Air Act:
Reformulated gasoline program; opt-out requests—
New York et al.; hearing, 34940
Drinking water:
Marine sanitation devices; establishment of two drinking water intake zones in Hudson River, NY, 34940–34943

Pesticides; tolerances in food, animal feeds, and raw agricultural commodities:
Dimethoate, 34945–34947
Imidacloprid, 34943–34945
Water pollution; effluent guidelines for point source categories:
Pulp, paper, and paperboard industry, 34938–34940
NOTICES
Agency information collection activities under OMB review, 34980–34982
Municipal solid waste landfill permit programs; adequacy determinations:
Massachusetts, 34982–34984
Pesticide registration, cancellation, etc.:
Chlorpyrifos, etc., 34984–34985
Dexol Boer Killer Cystals, etc., 34985–34991
Water pollution control:
Clean Water Act—
State water quality standards; approval and disapproval lists and individual control strategies; availability, 34991
National pollutant discharge elimination system; State programs—
Alaska, 34991–35017

Farm Credit Administration
NOTICES
Consolidated reporting system information release; policy statement
Fee schedule, 35017–35018

Federal Aviation Administration
RULES
Airworthiness directives:
Costruzioni Aeronautiche Giovanni Agusta S.p.A., 34844–34845
Class D and Class E airspace, 34845–34846
NOTICES
Airport noise compatibility program:
Laredo International Airport, TX, 35097–35098
Meetings:
Aviation Rulemaking Advisory Committee, 35099
Passenger facility charges; applications, etc.:
Gulfport-Biloxi Regional Airport, MS, 35099
Metropolitan Oakland International Airport, CA, 35099–35100

Federal Communications Commission
RULES
Organization, functions, and authority delegations:
General Counsel Office, Competition Division, 34901–34902
Practice and procedure:
Regulatory fees for 1994 FY; assessment and collection, 34902–34904
PROPOSED RULES
Television broadcasting:
Network/affiliate relationships; advertising, 34959–34961

Federal Emergency Management Agency
RULES
Flood elevation determinations:
Alabama et al., 34888–34891
Connecticut et al., 34891–34901
PROPOSED RULES
Flood elevation determinations:
Georgia et al., 34947–34959

Federal Energy Regulatory Commission
NOTICES
Applications, hearings, determinations, etc.:
Algonquin Gas Transmission Co., 34976
Mississippi River Transmission Corp., 34976–34977
Natural Gas Pipeline Co. of America, 34977
Northwest Pipeline Corp., 34977–34978
Ozark Gas Transmission System, 34978
Pauite Pipeline Co., 34978–34979
South Georgia Natural Gas Co., 34979
Tennessee Gas Pipeline Co., 34979
Transwestern Pipeline Co., 34979–34980
Williston Basin Interstate Pipeline Co., 34980

Federal Highway Administration
RULES
Engineering and traffic operations:
Utilities, 34846–34851

Federal Housing Finance Board
NOTICES
Meetings; Sunshine Act, 35109

Federal Maritime Commission
NOTICES
Agreements filed, etc., 35018

Federal Reserve System
NOTICES
Meetings; Sunshine Act, 35109–35110
Applications, hearings, determinations, etc.:
Bradshaw, John C., et al., 35018–35019
Dakota Heritage Banking Corp. et al., 35019
Financial Trust Corp. et al., 35019
First National Corp. North Dakota et al., 35020
Ramsey Financial Corp., 35019–35020
Sommervold, Merlyn, et al., 35020–35021

Federal Trade Commission
NOTICES
Prohibited trade practices:
Alpine Industries, Inc., et al., 35021–35023
Body Wise International, Inc., 35023–35026
Felson Builders, Inc., et al., 35026–35027
Good News Products, Inc., 35027–35029
Haagen-Dazs Co., Inc., 35029
Quantum Electronics Corp. et al., 35029–35032
Schwegmann Giant Super Markets, Inc., 35032
Service Corporation International, 35032
Silicon Graphics, Inc., 35032–35037
Senior Executive Service:
Performance Review Board; membership, 35037

Financial Management Service
See Fiscal Service

Fiscal Service
NOTICES
Interest rates:
Renegotiation Board and prompt payment rates, 35105

Food and Drug Administration
NOTICES
Compliance policy guides; revocation, 35038

Grain Inspection, Packers and Stockyards Administration
NOTICES
Committees; establishment, renewal, termination, etc.:
Federal Grain Inspection Service Advisory Committee, 34966

Health and Human Services Department
See Children and Families Administration
See Food and Drug Administration
See Health Care Financing Administration

Health Care Financing Administration
RULES
Medicare:
Health maintenance organizations (HMO), competitive medical plans, and health care prepayment plans; payment limits, 34885–34888

Housing and Urban Development Department
NOTICES
Agency information collection activities under OMB review, 35038–35040
Mortgage and loan insurance programs:
Section 235(r) interest rates, 35040
Regulatory waiver requests; quarterly listing, 35040–35046

Immigration and Naturalization Service
NOTICES
Environmental statements; availability, etc.:
Federal detention center; correction, 35111

Interior Department
See Land Management Bureau
See National Park Service
See Surface Mining Reclamation and Enforcement Office

International Trade Administration
NOTICES
Antidumping:
Pure magnesium from—
Canada, 34967–34968
North American Free Trade Agreement (NAFTA); binational panel reviews:
Color picture tubes from—
Canada, 34968–34969

International Trade Commission
NOTICES
Meetings; Sunshine Act, 35109

Interstate Commerce Commission
NOTICES
Railroad operation, acquisition, construction, etc.:
Chicago & North Western Railway Co., 35049
Kansas City Southern Railway Co., 35049–35050
Missouri Pacific Railroad Co., 35050

Justice Department
See Drug Enforcement Administration
See Immigration and Naturalization Service
See National Institute of Corrections

Labor Department
See Occupational Safety and Health Administration

Land Management Bureau
NOTICES
Alaska Native claims selection:
Nerklikmute Native Corp., 35046
Management framework plans, etc.:
Utah, 35046–35047

Library of Congress
RULES
Procedures and services:
Reading rooms and library collections; public access, policies, and procedures, 34852–34854

National Highway Traffic Safety Administration
PROPOSED RULES
Consumer information:
Uniform tire quality grading standards, 34961–34964
NOTICES
Grants and cooperative agreements; availability, etc.:
National child passenger safety program, 35100–35102
Motorcycle helmets and safety belts benefits; report to Congress, 35102–35103

National Institute of Corrections
NOTICES
Grant and cooperative agreement awards:
Policy Research, Inc., 35052–35054

National Oceanic and Atmospheric Administration
RULES
Fishery conservation and management:
Bering Sea and Aleutian Islands groundfish and North Pacific Fisheries research plan; implementation, 34904–34906
PROPOSED RULES
Fishery conservation and management:
Atlantic scup
Hearings, 34965
NOTICES
Organization, functions, and authority delegations:
National Weather Service; transfer of products and services to private sector, 34969–34970

National Park Service
NOTICES
Environmental statements; availability, etc.:
Obed National Wild and Scenic River, TN, 35047
Meetings:
Delta Region Preservation Commission, 35047
National Register of Historic Places:
Pending nominations, 35048–35049
Native American human remains and associated funerary objects:
Hood Museum of Art, NH; Zuni prayer sticks, 35047–35048

National Transportation Safety Board
NOTICES
Meetings; Sunshine Act, 35110

Natural Resources Conservation Service
NOTICES
Watershed projects; deauthorization of funds:
Mantachie Creek Watershed, MS, 34966–34967

Navy Department
NOTICES
Inventions, Government-owned; availability for licensing, 34973
Meetings:
Naval Research Advisory Committee, 34973

Patent licenses; non-exclusive, exclusive, or partially exclusive:
Pelagic Pressure Systems, 34973–34974
StateWide Technology Group, 34974

Nuclear Regulatory Commission
NOTICES
Meetings; Sunshine Act, 35109
Operating licenses, amendments; no significant hazards considerations; biweekly notices, 35058–35091
Reports; availability, etc.:
Standard technical specifications (Revision 1), 35091
Applications, hearings, determinations, etc.:
Cleveland Electric Illuminating Co. et al., 35054
Commonwealth Edison Co. et al., 35054–35057
Zuverink, Marc W., 35057–35058

Occupational Safety and Health Administration
RULES
Federal employee safety and health programs:
Multi-employer worksite policy and medical records access, 34851–34852

Postal Service
RULES
Domestic Mail Manual:
Preferred postage rates; second-, third-, and fourth-class library rate mail; changes, 34854–34856

Public Health Service
See Food and Drug Administration

Resolution Trust Corporation
NOTICES
Coastal Barrier Improvement Act; property availability:
Millwood Estates, VA, et al., 35091–35092

Securities and Exchange Commission
NOTICES
Self-regulatory organizations; proposed rule changes:
American Stock Exchange, Inc., 35095–35096
Chicago Board Options Exchange, Inc., 35096–35097
Applications, hearings, determinations, etc.:
Goldcorp Inc., 35092
Industrial Finance Corp. of Thailand, 35092–35094
Monaco Finance, Inc., 35094
Orthopedic Technology, Inc., 35094–35095

Social Security Administration
NOTICES
Meetings:
Social Security Advisory Council, 35097

Surface Mining Reclamation and Enforcement Office
PROPOSED RULES
Permanent program and abandoned mine land reclamation plan submissions:
West Virginia, 34934–34937

Textile Agreements Implementation Committee
See Committee for the Implementation of Textile Agreements

Thrift Supervision Office
NOTICES
Agency information collection activities under OMB review, 35105

Transportation Department
See Federal Aviation Administration
See Federal Highway Administration
See National Highway Traffic Safety Administration

Treasury Department
See Comptroller of the Currency
See Customs Service
See Fiscal Service
See Thrift Supervision Office

Reader Aids
Additional information, including a list of public laws, telephone numbers, and finding aids, appears in the Reader Aids section at the end of this issue.

Electronic Bulletin Board
Free **Electronic Bulletin Board** service for Public Law numbers, **Federal Register** finding aids, and a list of documents on public inspection is available on 202–275–1538 or 275–0920.

CFR PARTS AFFECTED IN THIS ISSUE

A cumulative list of the parts affected this month can be found in the Reader Aids section at the end of this issue.

7 CFR
956 34843

12 CFR

Proposed Rules:
20 34907
28 34907

14 CFR
39 34844
71 34845

16 CFR

Proposed Rules:
1500 34922
1507 34922

23 CFR
645 34846

29 CFR
1960 34851

30 CFR

Proposed Rules:
948 34934

34 CFR
263 35111

36 CFR
701 34852

39 CFR
111 34854

40 CFR
52 (3 documents) 34856, 34859, 34867
81 34859
180 (5 documents) 34868, 34869, 34871, 34874, 34876
185 34876
186 34876
281 34879
712 34879
716 34879

Proposed Rules:
52 34938
63 34938
80 34940
140 34940
180 (2 documents) 34943, 34945
430 34938

42 CFR
417 34885

44 CFR
65 (2 documents) 34888, 34889
67 34891

Proposed Rules:
67 34947

47 CFR
0 34901
1 34902

Proposed Rules:
73 34959

49 CFR

Proposed Rules:
575 34961

50 CFR
675 34904
677 34904

Proposed Rules:
635 34965

Rules and Regulations

Federal Register

Vol. 60, No. 128

Wednesday, July 5, 1995

This section of the FEDERAL REGISTER contains regulatory documents having general applicability and legal effect, most of which are keyed to and codified in the Code of Federal Regulations, which is published under 50 titles pursuant to 44 U.S.C. 1510.

The Code of Federal Regulations is sold by the Superintendent of Documents. Prices of new books are listed in the first FEDERAL REGISTER issue of each week.

DEPARTMENT OF AGRICULTURE

Agricultural Marketing Service

7 CFR Part 956

[Docket No. FV95–956–1IFR]

Sweet Onions Grown in the Walla Walla Valley of Southeast Washington and Northeast Oregon; Expenses and Assessment Rate

AGENCY: Agricultural Marketing Service, USDA.

ACTION: Interim final rule with request for comments.

SUMMARY: This interim final rule authorizes expenditures and establishes an assessment rate under Marketing Order No. 956 for the 1995–96 fiscal period. Authorization of this budget enables the Walla Walla Sweet Onion Committee (Committee) to incur expenses that are reasonable and necessary to administer the program. Funds to administer this program are derived from assessments on handlers.

DATES: Effective June 1, 1995, through May 31, 1996. Comments received by August 4, 1995, will be considered prior to issuance of a final rule.

ADDRESSES: Interested persons are invited to submit written comments concerning this interim final rule. Comments must be sent in triplicate to the Docket Clerk, Fruit and Vegetable Division, AMS, USDA, P.O. Box 96456, room 2523–S, Washington, DC 20090–6456, FAX 202–720–5698. Comments should reference the docket number and the date and page number of this issue of the **Federal Register** and will be available for public inspection in the Office of the Docket Clerk during regular business hours.

FOR FURTHER INFORMATION CONTACT: Martha Sue Clark, Marketing Order Administration Branch, Fruit and Vegetable Division, AMS, USDA, P.O. Box 96456, room 2523–S, Washington, DC 20090–6456, telephone 202–720–9918, or Robert J. Curry, Northwest Marketing Field Office, Fruit and Vegetable Division, AMS, USDA, Green-Wyatt Federal Building, room 369, 1220 Southwest Third Avenue, Portland, OR 97204, telephone 503–326–2724.

SUPPLEMENTARY INFORMATION: This rule is issued under Marketing Agreement and Order No. 956 (7 CFR part 956) regulating the handling of Sweet Onions grown in the Walla Walla Valley of Southeast Washington and Northeast Oregon. The marketing agreement and order are effective under the Agricultural Marketing Agreement Act of 1937, as amended (7 U.S.C. 601–674), hereinafter referred to as the Act.

The Department of Agriculture (Department) is issuing this rule in conformance with Executive Order 12866.

This interim final rule has been reviewed under Executive Order 12778, Civil Justice Reform. Under the marketing order now in effect Walla Walla Sweet Onion handlers are subject to assessments. Funds to administer the Walla Walla Sweet Onion order are derived from such assessments. It is intended that the assessment rate as issued herein will be applicable to all assessable onions during the 1995–96 fiscal period, which began June 1, 1995, and ends May 31, 1996. This interim final rule will not preempt any State or local laws, regulations, or policies, unless they present an irreconcilable conflict with this rule.

The Act provides that administrative proceedings must be exhausted before parties may file suit in court. Under section 8c(15)(A) of the Act, any handler subject to an order may file with the Secretary a petition stating that the order, any provision of the order, or any obligation imposed in connection with the order is not in accordance with law and request a modification of the order or to be exempted therefrom. Such handler is afforded the opportunity for a hearing on the petition. After the hearing the Secretary would rule on the petition. The Act provides that the district court of the United States in any district in which the handler is an inhabitant, or has his or her principal place of business, has jurisdiction in equity to review the Secretary's ruling on the petition, provided a bill in equity is filed not later than 20 days after the date of the entry of the ruling.

Pursuant to the requirements set forth in the Regulatory Flexibility Act (RFA), the Administrator of the Agricultural Marketing Service (AMS) has considered the economic impact of this rule on small entities.

The purpose of the RFA is to fit regulatory actions to the scale of business subject to such actions in order that small businesses will not be unduly or disproportionately burdened. Marketing orders issued pursuant to the Act, and the rules issued thereunder, are unique in that they are brought about through group action of essentially small entities acting on their own behalf. Thus, both statutes have small entity orientation and compatibility.

There are approximately 50 producers of Walla Walla Sweet Onions under this marketing order, and approximately 9 handlers. Small agricultural producers have been defined by the Small Business Administration (13 CFR 121.601) as those having annual receipts of less than $500,000, and small agricultural service firms are defined as those whose annual receipts are less than $5,000,000. The majority of Walla Walla Sweet Onion producers and handlers may be classified as small entities.

The budget of expenses for the 1995–96 fiscal period was prepared by the Walla Walla Sweet Onion Committee, the agency responsible for local administration of the marketing order, and submitted to the Department for approval. The members of the Committee are producers and handlers of Walla Walla Sweet Onions. They are familiar with the Committee's needs and with the costs of goods and services in their local area and are thus in a position to formulate an appropriate budget. The budget was formulated and discussed in a public meeting. Thus, all directly affected persons have had an opportunity to participate and provide input.

The assessment rate recommended by the Committee was derived by dividing anticipated expenses by expected shipments of Walla Walla Sweet Onions. Because that rate will be applied to actual shipments, it must be established at a rate that will provide sufficient income to pay the Committee's expenses.

The order became effective May 19, 1995, and the Committee met on June 7, 1995, and unanimously recommended

an initial budget of $72,000. Expense items include $12,000 for a manager or management services, $15,000 for management support services, $1,000 for a financial audit, $1,000 for staff travel, $2,500 for Committee travel, $10,000 for research projects, $12,000 for promotion projects, $3,000 for compliance, $6,000 for Perishable Agricultural Commodities Act expenses, and $9,500 for a miscellaneous fund for contingency and reserve.

The Committee also unanimously recommended an assessment rate of $0.12 per 50 pound bag or equivalent. This rate when applied to anticipated onion shipments of 600,000 bags will yield $72,000 in assessment income, which will be adequate to cover budgeted expenses.

While this action will impose some additional costs on handlers, the costs are in the form of uniform assessments on all handlers. Some of the additional costs may be passed on to producers. However, these costs will be offset by the benefits derived by the operation of the marketing order. Therefore, the Administrator of the AMS has determined that this action will not have a significant economic impact on a substantial number of small entities.

After consideration of all relevant matter presented, including the information and recommendations submitted by the Committee and other available information, it is hereby found that this rule, as hereinafter set forth, will tend to effectuate the declared policy of the Act.

Pursuant to 5 U.S.C. 553, it is also found and determined upon good cause that it is impracticable, unnecessary, and contrary to the public interest to give preliminary notice prior to putting this rule into effect and that good cause exists for not postponing the effective date of this action until 30 days after publication in the **Federal Register** because: (1) The Committee needs to have sufficient funds to pay its expenses which are incurred on a continuous basis; (2) the fiscal period began on June 1, 1995, and the marketing order requires that the rate of assessment for the fiscal period apply to all assessable onions handled during the fiscal period; (3) handlers are aware of this action which was unanimously recommended by the Committee at a public meeting; and (4) this interim final rule provides a 30-day comment period, and all comments timely received will be considered prior to finalization of this action.

List of Subjects in 7 CFR Part 956

Marketing agreements, Onions, Reporting and recordkeeping requirements.

For the reasons set forth in the preamble, 7 CFR part 956 is amended as follows:

PART 956—SWEET ONIONS GROWN IN THE WALLA WALLA VALLEY OF SOUTHEAST WASHINGTON AND NORTHEAST OREGON

1. The authority citation for 7 CFR part 956 continues to read as follows:

Authority: 7 U.S.C. 601–674.

2. A new § 956.201 is added to read as follows:

Note: This section will not appear in the Code of Federal Regulations.

§ 956.201 Expenses and assessment rate.

Expenses of $72,000 by the Walla Walla Sweet Onion Committee are authorized, and an assessment rate of $0.12 per 50 pound bag or equivalent of assessable onions is established for the fiscal period ending May 31, 1996. Unexpended funds may be carried over as a reserve.

Dated: June 28, 1995.

Sharon Bomer Lauritsen,

Deputy Director, Fruit and Vegetable Division.

[FR Doc. 95–16409 Filed 7–3–95; 8:45 am]

BILLING CODE 3410–02–P

DEPARTMENT OF TRANSPORTATION

Federal Aviation Administration

14 CFR Part 39

[Docket No. 94–SW–12–AD; Amendment 39–9290; AD 95–13–10]

Airworthiness Directives; Costruzioni Aeronautiche Giovanni Agusta S.p.A. Model A109A, A109AII, and A109C Helicopters

AGENCY: Federal Aviation Administration, DOT.

ACTION: Final rule.

SUMMARY: This amendment adopts a new airworthiness directive (AD), applicable to certain Costruzioni Aeronautiche Giovanni Agusta S.p.A. (Agusta) Model A109A, A109AII, and A109C helicopters, that requires a modification of the tail boom vertical fin to create inspection openings that permit initial and repetitive visual inspections for cracks in the vertical fin rear spar attachment area. This amendment is prompted by four reports of cracks in the tail boom vertical fin rear spar attachment area. The actions specified by this AD are intended to prevent failure of the vertical fin attachment caused by cracks in the tail boom vertical fin rear spar attachment area, and subsequent loss of control of the helicopter.

DATES: Effective August 9, 1995.

The incorporation by reference of certain publications listed in the regulations is approved by the Director of the Federal Register as of August 9, 1995.

ADDRESSES: The service information referenced in this AD may be obtained from Agusta, Direzione Supporto Prodotto E Servizi, 21019 Somma Lombardo (VA), Via per Tornavento, 15. This information may be examined at the FAA, Office of the Assistant Chief Counsel, 2601 Meacham Blvd., Room 663, Fort Worth, Texas; or at the Office of the Federal Register, 800 North Capitol Street, NW., suite 700, Washington, DC.

FOR FURTHER INFORMATION CONTACT: Mr. Richard Monschke, Aerospace Engineer, Rotorcraft Standards Staff, Rotorcraft Directorate, FAA, 2601 Meacham Blvd., Fort Worth, Texas 76137, telephone (817) 222–5116, fax (817) 222–5961.

SUPPLEMENTARY INFORMATION: A proposal to amend part 39 of the Federal Aviation Regulations (14 CFR part 39) to include an airworthiness directive (AD) that is applicable to certain Agusta Model A109A, A109AII, and A109C helicopters was published in the **Federal Register** on December 8, 1994 (59 FR 63281). That action proposed to require a modification of the tail boom vertical fin to create inspection openings that permit initial and repetitive visual inspections for cracks in the vertical fin rear span attachment area.

Interested persons have been afforded an opportunity to participate in the making of this amendment. No comments were received on the proposal or the FAA's determination of the cost to the public. The FAA has determined that air safety and the public interest require the adoption of the rule as proposed.

The FAA estimates that 73 helicopters of U.S. registry will be affected by this AD, 14 helicopters with tail boom, part number (P/N) 109–0370–01 installed, and 59 helicopters with tail boom, P/N 109–0370–17 installed, that it will take (1) approximately 4 work hours per helicopter to initially modify and inspect those helicopters with tail boom, P/N 109–0370–01; (2) approximately 6 work hours per helicopter to initially modify and inspect those helicopters with tail boom, P/N 109–0370–17; and (3)

approximately 1 work hour per helicopter to conduct the repetitive inspection regardless of which tail boom is installed, and that the average labor rate is $60 per work hour. Required parts will cost approximately $140 for helicopters with tail boom, P/N 109–0370–01 and $280 for helicopters with tail boom, P/N 109–0370–17. Based on these figures, the total cost impact of the proposed AD on U.S. operators during the first year is estimated to be $5,320 for helicopters with tail boom, P/N 109–0370–01, and $37,760 for helicopters with tail boom, P/N 109–0370–17, and for each subsequent year, regardless of the type tail boom installed, $180, assuming that three helicopters are subject to the repetitive inspection each year.

The regulations adopted herein will not have substantial direct effects on the States, on the relationship between the national government and the States, or on the distribution of power and responsibilities among the various levels of government. Therefore, in accordance with Executive Order 12612, it is determined that this final rule does not have sufficient federalism implications to warrant the preparation of a Federalism Assessment.

For the reasons discussed above, I certify that this action (1) is not a ''significant regulatory action'' under Executive Order 12866; (2) is not a ''significant rule'' under DOT Regulatory Policies and Procedures (44 FR 11034, February 26, 1979); and (3) will not have a significant economic impact, positive or negative, on a substantial number of small entities under the criteria of the Regulatory Flexibility Act. A final evaluation has been prepared for this action and it is contained in the Rules Docket. A copy of it may be obtained from the Rules Docket at the location provided under the caption **ADDRESSES**.

List of Subjects in 14 CFR Part 39

Air transportation, Aircraft, Aviation safety, Incorporation by reference, Safety.

Adoption of the Amendment

Accordingly, pursuant to the authority delegated to me by the Administrator, the Federal Aviation Administration amends part 39 of the Federal Aviation Regulations (14 CFR part 39) as follows:

PART 39—AIRWORTHINESS DIRECTIVES

1. The authority citation for part 39 continues to read as follows:

Authority: 49 U.S.C. App. 1354(a), 1421 and 1423; 49 U.S.C. 106(g); and 14 CFR 11.89.

§ 39.13 [Amended]

2. Section 39.13 is amended by adding a new airworthiness directive to read as follows:

95–13–10 Costruzioni Aeronautiche Giovanni Agusta S.P.A.: Amendment 39–9290. Docket No. 94–SW–12–AD.

Applicability: Model A109A, A109AII, and A109C helicopters, serial number (S/N) 7670 and lower, excluding S/N 7630, 7633, 7645, 7651, 7654, 7663, 7665, 7666, 7667, 7668, and 7669, certificated in any category.

Note 1: This AD applies to each helicopter identified in the preceding applicability provision, regardless of whether it has been modified, altered, or repaired in the area subject to the requirements of this AD. For helicopters that have been modified, altered, or repaired so that the performance of the requirements of this AD is affected, the owner/operator must use the authority provided in paragraph (c) to request approval from the FAA. This approval may address either no action, if the current configuration eliminates the unsafe condition, or different actions necessary to address the unsafe condition described in this AD. Such a request should include an assessment of the effect of the changed configuration on the unsafe condition addressed by this AD. In no case does the presence of any modification, alteration, or repair remove any helicopter from the applicability of this AD.

Compliance: Required as indicated, unless accomplished previously. To prevent failure of the vertical fin attachment caused by cracks in the tail boom vertical fin rear spar attachment area, and subsequent loss of control of the helicopter, accomplish the following:

(a) Within the next 100 hours time-in-service (TIS), modify the tail boom vertical fin and perform a visual inspection for cracks in the vertical fin rear spar attachment area in accordance with Part I of the Accomplishment Instructions of Agusta Bollettino Tecnico No. 109–96, dated March 30, 1994.

(1) For helicopters with tail boom, part number (P/N) 109–0370–01, perform the modification using modification kit, P/N 109–0822–38–101, in accordance with steps 5 through 8 of Part I of the Accomplishment Instructions of Agusta Bollettino Tecnico No. 109–96, dated March 30, 1994.

(2) For helicopters with tail boom, P/N 109–0370–17, perform the modification using modification kit, P/N 109–0822–38–103, in accordance with steps 9 through 12 of Part I of the Accomplishment Instructions of Agusta Bollettino Tecnico No. 109–96, dated March 30, 1994.

(b) Thereafter, at intervals not to exceed 300 hours TIS from the last inspection, remove the vertical fin leading edge fairing assembly and visually inspect the vertical fin rear spar attachment area for cracks in accordance with Part II of the Accomplishment Instructions of Agusta Bollettino Tecnico No. 109–96, dated March 30, 1994.

(c) An alternative method of compliance or adjustment of the compliance time that provides an acceptable level of safety may be used when approved by the Manager, Rotorcraft Standards Staff, Rotorcraft Directorate, FAA. Operators shall submit their requests through an FAA Principal Maintenance Inspector, who may concur or comment and then send it to the Manager, Rotorcraft Standards Staff.

Note 2: Information concerning the existence of approved alternative methods of compliance with this AD, if any, may be obtained from the Rotorcraft Standards Staff.

(d) Special flight permits may be issued in accordance with sections 21.197 and 21.199 of the Federal Aviation Regulations (14 CFR 21.197 and 21.199) to operate the helicopter to a location where the requirements of this AD can be accomplished.

(e) The inspection and modifications shall be done in accordance with Agusta Bollettino Tecnico No. 109–96, dated March 30, 1994. This incorporation by reference was approved by the Director of the Federal Register in accordance with 5 U.S.C. 552(a) and 1 CFR part 51. Copies may be obtained from Agusta, Direzione Supporto Prodotto E Servizi, 21019 Somma Lombardo (VA), Via per Tornavento, 15. Copies may be inspected at the FAA, Office of the Assistant Chief Counsel, 2601 Meacham Blvd., Room 663, Fort Worth, Texas; or at the Office of the Federal Register, 800 North Capitol Street, NW., suite 700, Washington, DC.

(f) This amendment becomes effective on August 9, 1995.

Issued in Fort Worth, Texas, on June 20, 1995.

Mark R. Schilling,

Acting Manager, Rotorcraft Directorate, Aircraft Certification Service.

[FR Doc. 95–15516 Filed 7–3–95; 8:45 am]

BILLING CODE 4910–13–P

---

14 CFR Part 71

[Airspace Docket No. 95–AWP–5]

Amendment to Class D and E Airspace Areas; Camp Pendleton Marine Corps Air Station (MCAS), CA

AGENCY: Federal Aviation Administration [FAA], DOT.

ACTION: Final rule.

SUMMARY: This amendment modifies the Class D and E airspace areas at Camp Pendleton MCAS, CA. This action will provide adequate airspace for instrument flight rules (IFR) operations at Camp Pendleton MCAS, CA.

EFFECTIVE DATE: 0901 UTC, September 14, 1995.

FOR FURTHER INFORMATION CONTACT: Scott Speer, System Management Specialist, System Management Branch, AWP–530, Air Traffic Division, Western-Pacific Region, Federal Aviation Administration, 15000 Aviation Boulevard, Lawndale,

California 90261, telephone (310) 297–0010.

SUPPLEMENTARY INFORMATION:

History

On May 9, 1995, the FAA proposed to amend part 71 of the Federal Aviation Regulations (14 CFR Part 71) by modifying the Class D and E airspace areas at Camp Pendleton MCAS, CA (60 FR 24592). This action will provide additional controlled airspace for instrument flight rules operations at Camp Pendleton MCAS, CA.

Interesting parties were invited to participate in this rulemaking proceeding by submitting written comments on the proposal to the FAA. No comments to the proposal were received. Class D and E airspace designations are published in paragraphs 5000 and 6004 of FAA Order 7400.9B, dated July 18, 1994, and effective September 16, 1994, which is incorporated by reference in 14 CFR 71.1. The Class D and E airspace designations listed in this document will be published subsequently in the Order.

The Rule

This amendment to part 71 of the Federal Aviation Regulations (14 CFR part 71) amends the Class D and E airspace areas at Camp Pendleton MCAS, CA, by providing additional controlled airspace for instrument flight rules operations at Camp Pendleton MCAS, CA.

The FAA has determined that this regulation only involves an established body of technical regulations for which frequent and routine amendments are necessary to keep them operationally current. Therefore, this regulation—(1) is not a ''significant regulatory action'' under Executive Order 12866; (2) is not a significant rule'' under DOT Regulatory Policies and Procedures (44 FR 11034; February 26, 1979); and (3) does not warrant preparation of a Regulatory Evaluation as the anticipated impact is so minimal. Since this is a routine matter that will only affect air traffic procedures and air navigation, it is certified that this rule will not have a significant economic impact on a substantial number of small entities under the criteria of the Regulatory Flexibility Act.

List of Subjects in 14 CFR Part 71

Airspace, Incorporation by reference, Navigation (air).

Adoption of the Amendment

In consideration of the foregoing, the Federal Aviation Administration amends 14 CFR part 71 as follows:

PART 71—[AMENDED]

1. The authority citation for part 71 continues to read as follows:

Authority: 49 U.S.C. 40103, 40113, 40120; E.O. 10854, 24 FR 9565, 3 CFR, 1959–1963 Comp., p. 389; 49 U.S.C. 106(g); 14 CFR 11.69.

§ 71.1 [Amended]

2. The incorporation by reference in 14 CFR 71.1 of the Federal Aviation Administration Order 7400.9B, Airspace Designations and Reporting Points, dated July 18, 1994, and effective September 16, 1994, is amended as follows:

Paragraph 5000 Class D Airspace

* * * * *

AWP CA D Camp Pendleton MCAS, CA [Revised]

Camp Pendleton MCAS (Munn Field), CA
(lat. 33°18′05″N, long. 117°21′18″W)

That airspace extending upward from the surface to and including 2600 feet MSL within a 4-mile radius of Camp Pendleton MCAS (Munn Field) extending clockwise from a point beginning at lat. 33°21′46″N, long. 117°19′26″W, to lat. 33°16′21″N, long. 117°25′38″W, and thence northeast to within a 2.6-Mile radius of Camp Pendleton MCAS (Munn Field) extending clockwise from a point beginning at lat. 33°17′30″N, long. 117°24′21″W, to lat. 33°20′38″N, long. 117°20′38″W, thence northeast to the point of beginning. This Class D airspace area is effective during the specific dates and times established in advance by a Notice to Airmen. The effective date and time will thereafter be continuously published in the Airport/Facility Director.

* * * * *

Paragraph 6004 Class E airspace areas designated as an extension to a Class D surface area

* * * * *

AWP CA E4 Camp Pendleton MCAS, CA [Revised]

Camp Pendleton MCAS (Munn Field), CA
(lat. 33°18′05″N, long. 117°21′18″W)
Oceanside VORTAC
(lat. 33°14′26″N, long. 117°25′04″W)

That airspace extending upward from the surface within 1.4 miles each side of the Oceanside VORTAC 042° radial extending from the 4-miles radius of Camp Pendleton MCAS to 11.6 miles northeast of the Oceanside VORTAC. This Class E airspace area is effective during the specific dates and times established in advance by a Notice to Airmen. The effective date and time will thereafter be continuously published in the Airport/Facility Director.

* * * * *

Issued in Los Angeles, California, on June 20, 1995.

Richard R. Lien,

Manager, Air Traffic Division, Western-Pacific Region.

[FR Doc. 95–16442 Filed 7–3–95; 8:45 am]

BILLING CODE 4910–13–M

Federal Highway Administration

23 CFR Part 645

[FHWA Docket No. 94–8]

RIN 2125–AD31

Utilities

AGENCY: Federal Highway Administration (FHWA), DOT.

ACTION: Final rule.

SUMMARY: The FHWA is amending its regulations on utilities. These amendments eliminate the requirement for FHWA preaward review and/or approval of consultant contracts for preliminary engineering and increase the ceiling for lump sum agreements from $25,000 to $100,000. They clarify the meaning of the term ''approved program'' and the methodology to be used to compute indirect or overhead rates. They require utilities to submit final billings within one year following completion of the utility relocation work. They eliminate the requirements for State highway agencies (SHAs) to certify the completion of utility work and to provide evidence of payment prior to reimbursement. They bring the definition of ''clear zone'' into conformance with the American Association of State Highway and Transportation Officials (AASHTO) ''Roadside Design Guide.'' Finally, they incorporate an amendment conforming the utilities regulations to the Intermodal Surface Transportation Efficiency Act of 1991 (ISTEA), Pub. L. 102–240, 105 Stat. 1914. The FHWA is making these changes to conform the utilities regulations to more recent laws, regulations, and guidance; to clarify these regulations; and to give the SHAs more flexibility in implementing them.

EFFECTIVE DATE: This final rule is effective August 4, 1995.

FOR FURTHER INFORMATION CONTACT: Mr. Jerry L. Poston, Office of Engineering, 202–366–0450, or Mr. Wilbert Baccus, Office of the Chief Counsel, 202–366–0780, 400 Seventh Street, SW., Washington, D.C. 20590.

SUPPLEMENTARY INFORMATION:

Background

The amendments in this final rule are based primarily on the notice of

proposed rulemaking (NPRM) published in the May 17, 1994, **Federal Register** at 59 FR 25579 (FHWA Docket No. 94–8). All comments received in response to this NPRM have been considered in adopting these amendments.

Current FHWA regulations regarding utility relocation and accommodation matters have evolved from basic principles established decades ago, with many of the policies remaining unchanged. The current regulations are found in title 23, Code of Federal Regulations, part 645 (23 CFR part 645). Subpart A of this part pertains to utility relocations, adjustments, and reimbursement. Subpart B pertains to the accommodation of utilities. Part 645 was revised on May 15, 1985, when a final rule was published in the **Federal Register** at 50 FR 20344. Two significant changes have occurred since then, on February 2 and July 1, 1988, when amendments to the regulation were published in the **Federal Register** at 53 FR 2829 and 53 FR 24932. The February 2 amendment provided that each SHA must decide, as part of its utility relocation plan, whether to allow longitudinal utility installations within the access control limits of freeways and, if allowed, under what circumstances. The July 1 amendment clarified that costs incurred by highway agencies in implementing projects solely for safety corrective measures to reduce the hazards of utilities to highway users are eligible for Federal-aid participation.

This final rule amends these regulations in the following manner and for the reasons indicated below.

In § 645.109, paragraph (b) is amended to eliminate the requirement for FHWA preaward review and/or approval of consultant contracts for preliminary engineering and related work. The amendment increases the number of consultant contracts that can be advanced without prior FHWA approval and provides for consistency in the administration of consultant agreements.

In § 645.113, paragraph (f) is amended to increase the ceiling for lump sum agreements from $25,000 to $100,000. This provides the SHAs greater flexibility in utilizing the lump sum payment arrangement. The purpose of allowing lump sum agreements in lieu of agreements based on an accounting of actual costs is to reduce the administrative burden associated with utility relocation projects. Under the lump sum process, cost accounting is easier, project billings are simplified, and a final audit of detailed cost records is not required. Final project costs are typically quite close to the costs estimated for small, routine projects. The FHWA believes that the small degree of accuracy that might be realized if more detailed cost accounting methods were followed does not justify the extra cost involved in carrying out detailed audits. This revision increases the number of utility relocations potentially eligible for lump sum payment, anticipates future needs, and responds, in part, to the fact that since the $25,000 limit was established in 1983, inflation has reduced the number and limited the scope of projects eligible for lump sum payments.

In § 645.113, paragraph (g)(1) is amended to change the term ''approved program'' to ''Statewide transportation improvement program.'' Title 23, United States Code, section 135 (23 U.S.C. 135) requires a Statewide transportation improvement program to include all projects in the State which are proposed for Federal-aid highway funding. This program replaces the ''approved program'' previously required in 23 U.S.C. 105. This amendment conforms the utilities regulation to section 135 by specifying that utility relocation work must be included in an ''approved Statewide transportation improvement program.''

In § 645.117, paragraph (d)(1) is amended to clarify the methodology to be used for computing indirect overhead rates. The definition of indirect costs, and what may or may not be included, is set forth in 48 CFR part 31, Contract Cost Principles and Procedures. Part 31 is referenced in 49 CFR part 18, the common rule for Federal grants, cooperative agreements, and subawards to State, local, and Indian tribal governments. However, to avoid any misunderstandings and to assure consistency with the common rule, a reference to 48 CFR 31 is added to the utilities regulations.

In § 645.117, paragraph (i)(2) is revised to require utilities to submit final billings within one year following completion of the work, otherwise previous payments to utilities may be considered final and projects may be closed out, except as agreed to between the SHA and the utility. This change will assist highway agencies in their efforts to obtain timely final billings from the utilities. Some utility bills are received years after the work is completed, thus delaying audit activity and project closure. Billings received from utilities more than one year following completion of the utility relocation work may be paid if the SHA so desires, and Federal funds may participate in these payments.

In § 645.117, paragraph (i)(2) is further revised to eliminate the requirement that the SHA certify that utility work is complete, acceptable, and in accordance with the terms of the agreement. These certifications are no longer considered necessary because all third party agreements and non-construction contracts are reviewed by the FHWA on a program basis. This revision will reduce paperwork and expedite the submittal of final billings from the utilities.

In § 645.117, paragraph (i)(4) is removed. This paragraph prohibited Federal reimbursement for a final utility billing until the highway agency furnished evidence that it had paid the utility with its own funds. This regulation is contrary to the general FHWA practice whereby the FHWA reimburses the SHAs for costs incurred, not for actual payments made.

Section 645.207 is amended to change the term ''clear recovery area'' to ''clear zone,'' to revise the definition of ''clear zone'' to conform to the one contained in AASHTO's ''Roadside Design Guide,'' [1] and to add a definition of the term ''border area'' which is contained in the definition of ''clear zone.'' In § 645.209, paragraph (a) is amended to clarify the FHWA's continuing intent to accommodate utilities within highway rights-of-way when sufficient clear zone is not available, and paragraph (b) is amended to change the term ''clear recovery area'' to ''clear zone.'' These changes provide consistency with AASHTO's ''Roadside Design Guide,'' a 1989 document which should be used as a guide for establishing clear zones for various types of highways and operating conditions. The term ''clear recovery area'' originated in 1985 and, though worded somewhat differently, meant essentially the same as the term ''clear zone.'' These terms were often used interchangeably. The ''Roadside Design Guide,'' however, uses the term ''clear zone'' exclusively. Hence, to avoid confusion, the term ''clear zone'' is incorporated into the utilities regulations.

In § 645.215, paragraph (a) is amended to change the term ''Federal-aid system'' to ''Federal-aid highway.'' This revision is in accordance with a conforming amendment in section 1016(f)(1)(B) of the ISTEA changing the term ''Federal-aid system'' in 23 U.S.C. 109(l) to ''Federal-aid highway.''

[1] The ''Roadside Design Guide'' is incorporated by reference at 23 CFR 625.5(a)(3). It is available for purchase from the American Association of State Highway and Transportation Officials, 444 North Capitol Street, NW., Washington, DC 20001. Also, it is available for inspection as provided in 49 CFR part 7, appendix D.

Discussion of Comments

Interested persons were invited to participate in the development of this final rule by submitting written comments on the NPRM to Docket 94–8 on or before July 18, 1994. Comments were received from 10 SHAs and 6 utilities representatives. A summary of the comments received relative to each proposed amendment follows.

In § 645.109, paragraph (b) is amended to eliminate the requirement for FHWA preaward review and/or approval of consultant contracts for preliminary engineering. Four SHAs and 5 utilities commenters were in favor of the amendment proposed in the NPRM to increase the upper limit on the value of such contracts from $10,000 to $25,000. One SHA recommended that the upper limit be increased even more.

In § 645.113, paragraph (f) is amended to increase the ceiling for lump sum agreements from $25,000 to $100,000. Four SHAs were in favor of this proposed amendment; 5 utilities commenters recommended that the upper limit be increased even more.

In § 645.117, paragraph (d)(1) is amended to clarify the methodology to be used to compute indirect or overhead rates. Four SHAs and 5 utilities commenters were in favor of this proposed amendment.

In § 645.117, paragraph (i)(2) is amended to require utilities to submit final billings within one year following completion of work. Four SHAs were in favor of the amendment proposed in the NPRM to establish a 180-day final billing deadline. Three SHAs and 6 utilities commenters recommended that the final billing deadline be established for a period of time longer than 180 calendar days proposed in the NPRM and suggested several other time periods.

In §§ 645.207 and 645.209, the definition of ''clear zone'' is revised to parallel the definition of this term in AASHTO's ''Roadside Design Guide.'' Four SHAs were in favor of this proposed amendment; 1 SHA recommended that the Texas Transportation Institute's (TTI) ''A Supplement to a Guide for Selecting, Designing, and Locating Traffic Barriers'' be included with the AASHTO ''Roadside Design Guide'' as a good technical reference; 5 utilities commenters recommended that the clear zone definition specify that the clear zone ends at the right-of-way line.

Section 645.215 incorporates a conforming amendment contained in section 1016(f)(1)(B) of the ISTEA that changes the term ''Federal-aid systems'' to ''Federal-aid highways.'' Four SHAs were in favor of this proposed amendment.

A discussion of the specific comments received and the FHWA responses to them follows.

Comment 1

One SHA recommended that § 645.109(b) be modified to increase the upper limit on the value of consultant contracts for preliminary engineering for which the FHWA may forgo preaward review and/or approval from $10,000 to $100,000, rather than simply increasing it to $25,000 as the FHWA had proposed.

Response

The FHWA has decided to totally eliminate the requirement for FHWA preaward review and/or approval of consultant contracts for preliminary engineering, consistent with the administration of other consultant agreements. The determination to allow a utility to use a consultant for preliminary engineering should be made by the SHA, not the FHWA, when the utility agreement is executed. This change will be accomplished by eliminating the last sentence of § 645.109(b).

Comment 2

Five utilities commenters recommended that § 645.113(f) be modified to increase the ceiling for lump sum agreements from $25,000 to $200,000. They asserted that this was desirable because the administrative cost of tracking ''actual cost'' projects adds significantly to the cost of the undertaking for both the utility and the SHAs that must approve the billing.

Response

This recommendation was not adopted. The increase from $25,000 to $100,000 will increase the number of utility relocations potentially eligible for lump sum payments and reduce the administrative burden associated with utility relocation projects. An increase even higher than $100,000, such as to the recommended $200,000, may have been possible. However, it is desired at this time to retain the $100,000 figure because it seems to represent a good break point between major and minor work and because it corresponds more closely to increasing inflation rates which have over the years reduced the number and limited the scope of projects eligible for lump sum payments. Provisions for lump sum payments for utility relocation work were first addressed by the FHWA in Policy and Procedure Memorandum 30–4 (PPM 30–4)[2] dated December 31, 1957. These provisions pertained to very minor work estimated to cost less than $2,500, work that normally would be performed by a utility with its own forces. Increases up to the present $25,000 limit, which was established in 1983, were based primarily upon inflation rates. Projecting inflation from 1983 to 1995 provides a figure which is slightly less than $100,000, but the $100,000 figure is used several other places in the Federal regulations as a break point between major and minor work. Even so, the FHWA will monitor the effects of increasing the lump sum ceiling to $100,000, primarily through discussions with States and utilities' coordinators, and will consider the possibility of increasing the figure in the near future if such is deemed appropriate.

Comment 3

Three SHAs and 6 utilities commenters had reservations about the proposed amendment to § 645.117(i)(2) to require utilities to submit final billings within 180 calendar days following completion of work. They all basically supported the concept of establishing a deadline for submitting final billings, but strongly indicated that 180 calendar days were not enough. The utilities commenters recommended that at least 270 calendar days be provided. Two SHAs recommended 365 calendar days. The utilities commenters asserted that (a) a 180 calendar day requirement would be burdensome to utilities, especially those that are joint pole users, because of cross billing from other parties, and (b) it is often very difficult to secure final bills simply because of the number of parties involved and the time required to verify and reconcile the accuracy of the billing. One SHA stated that the 180 calendar day limit would not provide the utilities sufficient time to compile changes and submit their final bills, and that, historically, 80 percent of utility billings are received between 180 and 365 calendar days after completion of the utility relocation work. Another SHA indicated that the 180 calendar day limit would put an unreasonable burden on the State since its regulations did not contain a time limit.

Response

These recommendations were adopted with a slight, but more flexible, modification. The comments revealed a

[2] The Federal Highway Administration's Policy and Procedure Memorandums are available for inspection and copying from the FHWA headquarters and field offices as prescribed at 49 CFR part 7, appendix D.

general consensus that it would be desirable to establish a time period following completion of the utility relocation work during which final billings must be submitted, but that 180 calendar days were not enough. Hence, § 645.117(i)(2) is amended to require utilities to submit final billings within one year following completion of the utility relocation work, otherwise previous payments to the utility may be considered final, except as agreed to between the SHA and the utility.

Comment 4

One SHA requested clarification of the term ''completion of work'' as it is used in the proposed amendment to § 645.117(i)(2). For example, the commenter asked whether the work would be completed when finished in the field by the utility or its contractor, when the highway project was finished, or at some other milestone.

Response

The intent of the proposed amendment was to require utilities to submit final billings within a certain time period following physical completion of the utility relocation work in the field. Hence, § 645.117(i)(2) is amended to require utilities to submit final billings within one year following completion of the utility relocation work.

Comment 5

One SHA suggested that the proposed amendment to require utilities to submit final billings within 180 calendar days following completion of work be modified to allow for time extensions beyond the 180 calendar day limit if the SHA should so choose. The SHA argued that this modification was needed to alleviate conflicts with a State law permitting claims against the State to be submitted within one year from the time of accrual.

Response

This recommendation was adopted. As stated in the NPRM, the FHWA intended to allow billings received after the specified time period to be paid at the discretion of the highway agency. Hence, § 645.117(i)(2) is amended to require utilities to submit final billings within one year following completion of the utility relocation work, with exceptions as agreed to between the SHA and the utility.

Comment 6

Five utilities commenters recommended that the definition of ''clear zone'' in the proposed amendment to § 645.207 be modified to clearly indicate that the clear zone ends at the right-of-way line.

Response

This suggested amendment was not made to the ''clear zone'' definition, but was incorporated elsewhere in the regulations. The purpose for amending § 645.207 was to provide consistency with AASHTO's ''Roadside Design Guide.'' To do so, the term ''clear recovery area'' was changed to ''clear zone'' and the definition of ''clear zone'' in the ''Roadside Design Guide'' was adopted. However, to clarify the intent of the revised regulation, a definition of ''border area'' was added. This, taken together with the definition of ''clear zone,'' means that the area that actually can be made available for the safe use of errant vehicles is limited by the right-of-way width. For all practical purposes, the old definition of ''clear recovery area'' is the same as the actual clear zone. In cases where sufficient right-of-way is not available to accommodate the minimum clear zone distance required, highway agencies should consider acquiring additional right-of-way, taking into account not only clear zone but other highway and utility needs. In all cases, full consideration should be given to sound engineering principles and economic factors. Utility facilities should be treated the same as other roadside hazards. Little will be gained by moving utilities, unless their presence in the clear zone presents a significantly greater hazard to motorists than any other hazards.

Comment 7

One SHA suggested that TTI's ''A Supplement to a Guide for Selecting, Designing, and Locating Traffic Barriers'' be included with the AASHTO ''Roadside Design Guide'' as a good technical reference in the proposed amendment to § 645.207.

Response

This suggestion was not adopted. AASHTO's ''Roadside Design Guide,'' 1989, superseded AASHTO's ''Guide for Selecting, Designing, and Locating Traffic Barriers,'' 1977, and the TTI supplement which came into use in the early 1980's, even though much of the guidance in the new document was the same as in the superseded documents. One significant difference between the ''Roadside Design Guide'' and the two earlier documents is the determination of minimum clear zones on slopes. Current AASHTO guidelines consider embankment slopes between 3:1 and 4:1 to be non-recoverable (i.e., any vehicle leaving the roadway will likely go to the bottom of the slope). Consequently, the clear zone should not end on the slope itself, and a clear run-out area beyond the toe of such a slope is desirable. This was not considered in the 1977 barrier guide or the TTI supplement, so the information in these documents is no longer accurate for non-recoverable slopes. Any SHA may modify the earlier guidance and continue to use it to determine minimum clear zones on existing facilities. However, the FHWA believes a more practical approach is for each highway agency to develop and implement a policy on utility pole locations that encourages maximum offsets consistent with existing conditions and based on a cost-effectiveness analysis.

Comment 8

One SHA expressed a concern about non-regulatory guidance in the FHWA's ''Federal-Aid Policy Guide'' [3] dealing with the use of fixed amount (lump sum) payments to utilities. The wording in the non-regulatory supplement to part 645 (NS 23 CFR 645A, Attachment), case I, paragraph 2, indicates that the lump sum payments may be made for work performed by a utility with its own forces. It was requested that the FHWA guidance in the non-regulatory supplement be revised to allow lump sum payments to be made for work performed for a utility under a utility-let or continuing contract.

Response

Provisions for lump sum payments for utility relocation work were first addressed by the FHWA in PPM 30–4 dated December 31, 1957. These provisions pertained to very minor work estimated to cost less than $2,500, work that normally would be performed by a utility with its own forces. There was no apparent intent, however, in PPM 30–4 or any subsequent FHWA guidance or regulation, to preclude lump sum payments for work performed by a contractor under a utility-let contract. If the utility uses an existing continuing contractor, payment should be made by the method the utility has previously established with the contractor. If the continuing contract establishes a lump sum payment for certain types of work, this payment method can be used for the Federal-aid project if the SHA believes the cost is reasonable. If the utility lets a contract, payment should be based on the methods that are customary and acceptable for the work

[3] The Federal Highway Administration's ''Federal-Aid Policy Guide'' is available for inspection and copying from the FHWA headquarters and field offices as prescribed at 49 CFR part 7, appendix D.

involved, which could potentially include the lump sum payment method.

In light of these comments, the FHWA is revising its regulations to incorporate the amendments outlined in the NPRM with some modifications to clarify the proposals and to address concerns raised by commenters.

Executive Order 12866 (Regulatory Planning and Review) and DOT Regulatory Policies and Procedures

The FHWA has determined that this action is not a significant regulatory action within the meaning of Executive Order 12866 or significant within the meaning of Department of Transportation regulatory policies and procedures. The amendments would simply make minor changes to update the utilities regulations to conform to recent laws, regulations, and guidance and to clarify existing policies. It is anticipated that the economic impact of this rulemaking will be minimal because the amendments would only clarify or simplify procedures presently being used by SHAs and utilities. Therefore, a full regulatory evaluation is not required.

Regulatory Flexibility Act

In compliance with the Regulatory Flexibility Act (5 U.S.C. 601–612), the FHWA has evaluated the effects of this rule on small entities. Based on the evaluation, the FHWA certifies that this action will not have a significant economic impact on a substantial number of small entities. This is because the amendments would only clarify or simplify procedures used by SHAs and utilities in accordance with existing laws, regulations, and guidance.

Executive Order 12612 (Federalism Assessment)

This action has been analyzed in accordance with the principles and criteria contained in Executive Order 12612, and it has been determined that it does not have sufficient federalism implications to warrant the preparation of a separate federalism assessment. This action merely conforms the utilities regulations to recent laws, regulations, and guidance; clarifies these regulations; and gives the SHAs more flexibility in implementing them.

Executive Order 12372 (Intergovernmental Review)

Catalog of Federal Domestic Assistance Program Number 20.205, Highway Planning and Construction. The regulations implementing Executive Order 12372 regarding intergovernmental consultation on Federal programs and activities apply to this program.

Paperwork Reduction Act

This action does not contain a collection of information requirement for purposes of the Paperwork Reduction Act of 1980, 44 U.S.C. 3501–3520.

National Environmental Policy Act

The agency has analyzed this action for the purpose of the National Environmental Policy Act of 1969 (42 U.S.C. 4321 *et. seq.*) and has determined that this action would not have any effect on the quality of the environment.

Regulation Identification Number

A regulation identification number (RIN) is assigned to each regulatory action listed in the Unified Agenda of Federal Regulations. The Regulatory Information Service Center publishes the Unified Agenda in April and October of each year. The RIN contained in the heading of this document can be used to cross reference this action with the Unified Agenda.

List of Subjects in 23 CFR Part 645

Grant Programs—transportation, Highways and roads, Utilities—relocations, adjustment, reimbursement.

In consideration of the foregoing, title 23, Code of Federal Regulations, part 645 is amended as set forth below.

Issued on: June 22, 1995.

Rodney E. Slater,

Federal Highway Administrator.

PART 645—UTILITIES

1. The authority citation for part 645 continues to read as follows:

Authority: 23 U.S.C. 101, 109, 111, 116, 123, and 315; 23 CFR 1.23 and 1.27; 49 CFR 1.48(b); and E.O. 11990, 42 FR 26961 (May 24, 1977).

§ 645.109 [Amended]

2. In § 645.109, paragraph (b) is amended by removing the last sentence.

§ 645.113 [Amended]

3. In § 645.113, paragraph (f) is amended by removing the figure ''$25,000'' wherever it appears and adding in its place the figure ''$100,000'', and paragraph (g)(1) is amended by revising the term ''approved program'' to read ''approved Statewide transportation improvement program''.

4. In § 645.117, paragraph (i)(4) is removed, and paragraphs (d)(1) and (i)(2) are revised to read as follows:

§ 645.117 Cost development and reimbursement.

* * * * *

(d) *Overhead and indirect construction costs.* (1) Overhead and indirect construction costs not charged directly to work order or construction accounts may be allocated to the relocation provided the allocation is made on an equitable basis. All costs included in the allocation shall be eligible for Federal reimbursement, reasonable, actually incurred by the utility, and consistent with the provisions of 48 CFR part 31.

* * * * *

(i) *Billings.* (1) * * *

(2) The utility shall provide one final and complete billing of all costs incurred, or of the agreed-to lump-sum, within one year following completion of the utility relocation work, otherwise previous payments to the utility may be considered final, except as agreed to between the SHA and the utility.

* * * * *

5. Section 645.207 is amended by removing the paragraph designations from all definitions; by placing the definitions in alphabetical order; by removing the definition of ''clear recovery area''; by removing the words ''clear recovery area'' from the first sentence in the definition for ''clear roadside policy'' and adding in their place the words ''clear zone''; and by adding the definitions of ''border area'' and ''clear zone'' as follows:

§ 645.207 Definitions.

* * * * *

Border area—the area between the traveled way and the right-of-way line.

* * * * *

Clear zone—the total roadside border area starting at the edge of the traveled way, available for safe use by errant vehicles. This area may consist of a shoulder, a recoverable slope, a non-recoverable slope, and/or the area at the toe of a non-recoverable slope available for safe use by an errant vehicle. The desired width is dependent upon the traffic volumes and speeds, and on the roadside geometry. The AASHTO ''Roadside Design Guide,'' 1989, should be used as a guide for establishing clear zones for various types of highways and operating conditions. It is available for inspection from the FHWA Washington Headquarters and all FHWA Division and Regional Offices as prescribed in 49 CFR part 7, appendix D. Copies of current AASHTO publications are available for purchase from the American Association of State Highway and Transportation Officials, Suite 225,

444 North Capitol Street, NW., Washington, DC. 20001.

* * * * *

6. In § 645.209, paragraph (a) is amended by adding a new sentence between the existing third and fourth sentences to read as set forth below, and paragraph (b) is amended by removing the words ''clear recovery'' in the second sentence and ''clear recovery area'' in the third sentence and adding in their place the words ''clear zone''.

§ 645.209 General requirements.

(a) *Safety*. * * * The lack of sufficient right-of-way width to accommodate utilities outside the desirable clear zone, in and of itself, is not a valid reason to preclude utilities from occupying the highway right-of-way. * * *

§ 645.215 [Amended]

7. In § 645.215, paragraph (a), the fifth sentence, is amended by removing the words ''of the Federal-aid highway system'' and adding in their place the words ''of Federal-aid highways''.

[FR Doc. 95–16403 Filed 7–3–95; 8:45 am]

BILLING CODE 4910–22–P

DEPARTMENT OF LABOR

Occupational Safety and Health Administration

29 CFR Part 1960

Basic Program Elements for Federal Employee Occupational Safety and Health Programs

AGENCY: Occupational Safety and Health Administration, Labor.

ACTION: Final rule.

SUMMARY: The Occupational Safety and Health Administration (OSHA) is amending 29 CFR part 1960 to permit implementation of its multi-employer worksite policy in the federal sector and to incorporate into the federal program the medical access provisions for the private sector set forth at 29 CFR 1910.20.

EFFECTIVE DATE: July 5, 1995.

FOR FURTHER INFORMATION CONTACT: Mr. John E. Plummer, Director, Office of Federal Agency Programs, Room N3112, U.S. Department of Labor, 200 Constitution Avenue, NW., Washington, DC 20210 (202–219–9329).

SUPPLEMENTARY INFORMATION:

(A) Multi-employer Policy

Private sector employers in conventional, one-employer workplaces are accountable under the Occupational Safety and Health Act for providing safe working conditions for their employees. In private sector worksites where the working environment is controlled by more than one employer, such as in construction or other activities involving subcontractors, OSHA's long-standing policy has been to hold multiple employers responsible for the correction of workplace hazards in appropriate cases. Thus, when safety or health hazards occur on multi-employer worksites in the private sector, OSHA will issue citations not only to the employer whose employees were exposed to the violation, but to other employers such as general contractors or host employers, who can reasonably be expected to have identified or corrected the hazard by virtue of their supervisory role over the worksite.

OSHA's current citation practice for multi-employer operations is described in the OSHA Field Inspection Reference Manual (FIRM), OSHA Instruction CPL 2.103 at III–28,29 (1994). OSHA's multi-employer policy, which has been upheld numerous times by the Occupational Safety and Health Review Commission and the federal courts, does not confer special or extraordinary burdens on superintending employers, but merely recognizes that employers with overall administrative responsibility for an ongoing project are responsible under the Occupational Safety and Health Act for taking reasonable steps to correct, or to require the correction of, hazards of which they could reasonably be expected to be aware. Moreover, a variety of OSHA safety and health standards specifically require certain categories of employer to take reasonable steps to assure the safety of all employees other than their own. Host employers in refineries and other operations where chemical process hazards are present are required, for example, to inform contract employers of hazards and take other administrative steps to assure safe contractor practices, *see* 29 CFR 1910.119(h). Similarly, employers engaged in hazardous waste operations are required, among other things, to implement programs to assure that contractor and subcontractor employees are informed of the nature, level, and degree of exposure likely on the site, *see* 29 CFR 1910.120(i).

In its role as the lead agency for implementing and reviewing compliance with Executive Order 12291, ''Federal Agency Safety Programs and Responsibilities'', and 29 CFR part 1960, *Basic Elements for Federal Employee Occupational Safety and Health Programs,* OSHA requires federal agencies to comply with all occupational safety and health standards, and, generally, to assume responsibility for worker protection in a manner comparable to private employers, including multi-employer worksite responsibility in appropriate circumstances. However, most multi-employer workplaces in the federal sector involve a mixed workforce of civil service and private contractor employees. Under the current wording of 29 CFR part 1960, the safety responsibilities of a federal agency run only to federal workers, and employees of federal contractors are specifically excluded, *see* 29 CFR 1960.1(f). OSHA had no intention when it issued this regulation to inadvertently limit the compliance responsibilities of federal agencies in multi-employer worksites; instead, the language in 1960.1(f) was intended only to assure that contractors on federally-owned or administered jobsites remain subject to the full range of OSHA enforcement remedies available in the private sector.

For this reason, the provisions of 29 CFR 1960.1(f) are being clarified by deleting the language which suggests that federal agencies are accountable for the safety of federal employees exclusively, while retaining a provision which makes clear that private contractor remain subject to private sector enforcement remedies. This change is intended to ensure that the health and safety responsibilities of federal agencies on multi-employer worksites are comparable to those of private employers in comparable circumstances.

(B) Medical Records Access

Section 19 of the OSH Act, Executive Order 12196, and 29 CFR part 1960 require agency heads to implement occupational safety and health programs consistent with standards promulgated under section 6 of the OSH Act. Because 29 CFR 1910.20, which regulates employee access to exposure and medical records, was promulgated pursuant to section 8 of the OSH Act, under existing regulations it would not be a required element of an agency program. Therefore, OSHA is amending 29 CFR 1960.66 by adding a new paragraph (f) to make 29 CFR 1910.20 a required element of federal agency safety and health programs.

Administrative Procedure

The clarification of federal agency safety responsibilities on multi-employer jobsites has no regulatory effect on private parties, and applies only to federal agencies. It is, accordingly, a ''rule of agency procedure or practice'' within the meaning of the Administrative Procedure Act, 5 U.S.C. 553(b)(3). Similarly, the requirement

that federal agency safety programs include procedures for prompt reporting of certain types of occupational accidents and fatalities applies only to federal agencies and can fairly be described as a rule of agency practice or procedure. Accordingly, notice and public comment are not required, and today's revisions to 29 CFR part 1960 are issued as a final rule. In addition, today's procedural changes for federal agencies do not meet the definitions of a ''major rule'' under Executive Order 12291 and no regulatory impact analysis is required. Finally, for the reasons stated above, pursuant to 5 U.S.C. 553(d) OSHA finds good cause for making the present modifications to 29 CFR part 1960 effective immediately upon publication.

Authority: This document was prepared under the direction of Mr. Joseph A. Dear, Assistant Secretary of Labor for Occupational Safety and Health, U.S. Department of Labor, 200 Constitution Avenue, NW., Washington, DC 20210.

Accordingly, pursuant to sections 19 and 24 of the Occupational Safety and Health Act of 1970 (84 Stat. 1609, 1614; 29 U.S.C. 668, 673), 5 U.S.C. 553, Secretary of Labor's Order No, 1–90 (55 FR 9033) and Executive Order 12196, 29 CFR part 1960 is revised to include medical reporting requirements and multi-employer worksite responsibilities comparable to those applicable to private sector employers.

List of Subjects in 29 CFR Part 1960

Government employees, Occupational safety and health, Reporting and recordkeeping requirements.

Signed at Washington, DC this 28th day of June, 1995.

Joseph A. Dear,

Assistant Secretary of Labor.

For the reasons set forth in the preamble, part 1960 of chapter XVII of title 29 of the Code of Federal Regulations is amended to read as follows:

PART 1960—BASIC PROGRAM ELEMENTS FOR FEDERAL EMPLOYEE OCCUPATIONAL SAFETY AND HEALTH PROGRAMS

1. The authority citation for part 1960 continues to read as follows:

Authority: Sections 19 and 24 of the Occupational Safety and Health Act of 1970 (84 Stat. 1609, 1614; 29 U.S.C. 668, 673), 5 U.S.C. 553, Secretary of Labor's Order No. 1–90 (55 FR 9033), and Executive Order 12196.

2. Section 1960.1 is amended by revising paragraph (f) to read as follows:

§ 1960.1 Purpose and scope.

* * * * *

(f) No provision of the Executive Order or this part shall be construed in any manner to relieve any private employer, including Federal contractors, or their employees of any rights or responsibilities under the provisions of the Act, including compliance activities conducted by the Department of Labor or other appropriate authority.

* * * * *

3. Section 1960.66 is amended by adding a new paragraph (f) to read as follows:

§ 1960.66 Purpose, scope and general provisions.

* * * * *

(f) Retention and access of employee record shall be in accordance with 29 CFR 1910.20.

* * * * *

[FR Doc. 95–16410 Filed 7–3 –95; 8:45 am]

BILLING CODE 4510–26–M

LIBRARY OF CONGRESS

36 CFR Part 701

[Docket No. LOC 95–1]

Reading Rooms and Service to the Collections

AGENCY: Library of Congress.

ACTION: Final rules.

SUMMARY: The Library of Congress issues these final rules to amend its regulations on access to the Library's collections by members of the public and policies and procedures for service to the collections. This amendment reflects the new capabilities of the Library's reader registration system, specifically requiring all members of the public wishing to use the Library's collections to obtain a Library-issued User Card. The User card will contain the name, current address, and a digitized photograph of the user. This amendment also describes new policies and procedures for providing and maintaining security for Library materials from accidental or deliberate damage or loss caused by users of these collections and the penalties for misuse. These measures include establishing conditions and procedures for the use of material that requires special handling, instructing and monitoring readers, assuring that the conditions and housing of all materials are adequate to minimize risk, and establishing control points at entrances to reading rooms. These new procedures will enhance the security of the Library's collections. The Library will begin issuing user cards on or about September 1, 1995, and will begin requiring them before providing reading room service 90 days later.

EFFECTIVE DATE: July 5, 1995.

FOR FURTHER INFORMATION CONTACT: Johnnie M. Barksdale, Regulations Officer, Office of the General Counsel, Library of Congress, Washington, DC 20540–1050. Telephone No. (202) 707–1593.

SUPPLEMENTARY INFORMATION: Under the authority of 2 U.S.C. 136, the Librarian of Congress is authorized to make rules and regulations for the government of the Library and for the protection of its property. In March of 1992, James H. Billington, the Librarian of Congress, announced that new security measures had to be taken to protect the Library's collections due to an increase in thefts and mutilation of materials. ''The Library of Congress has long prided itself on being open to all readers,'' Dr. Billington said. ''However, as the nation's Library and the world's largest repository of mankind's intellectual accomplishments, we have an obligation to protect our collections for future generations of Americans. Many of our books, maps, prints, and manuscripts are irreplaceable. We cannot risk their loss or desecration. We are responsible for the nation's patrimony.'' Dr. Billington's announcement followed lengthy planning by the Library to tighten security. It also followed the third arrest for theft from the Library since April 1991. 36 CFR 701.5 is amended to announce the Library's new capability to capture and store the name, address, and a digitized photograph of registered users of its collections in an automated file for collections security purposes. The existing text in 36 CFR 701.5 will become paragraph (b) and a new paragraph (a) is added. 36 CFR 701.6 is amended to set forth the general policy of the Library on the use of materials in its custody. 18 U.S.C. 641, 1361, and 2071; and 22 D.C. Code 3106 set forth criminal provisions for mutilation or theft of Government property. The existing text in 36 CFR 701.6, Chapter VII will become paragraph (a) and new paragraphs (b), (c), and (d) are added. The last sentence in paragraph (a) will be removed.

Comments

The Library of Congress received one comment on the proposed regulation; that comment submitted in the form of a post card by Matthew J. McGuire, Cheshire, Connecticut. Mr. McGuire stated that he strongly protests the proposed rule on the use of Library-

issued User Cards and urged that the Library not implement this policy.

Although Mr. McGuire's comments were considered, no changes were made to the original text of the proposed rules.

List of Subjects in 36 CFR Part 701

Libraries, Seals and insignias.

Final Regulations

In consideration of the foregoing the Library of Congress amends 36 CFR part 701 as follows:

PART 701—PROCEDURES AND SERVICES

1. The authority citation for part 701 will continue to read as follows:

Authority: 2 U.S.C. 136.

2. Section 701.5 is amended by redesignating the existing text as paragraph (b) and adding a new paragraph (a) to read as follows:

§ 701.5 The Library's reading rooms and public use thereof.

(a) All members of the public wishing to use materials from the Library's collections first must obtain a User Card. The Library will issue User Cards, in accordance with established access regulations, to those persons who present a valid photo identification card containing their name and current address. The Library-issued User Card will include the name, digitized photograph, and signature of the user. It must be presented when requesting materials housed in the book stacks or other non-public areas or upon request of a Library staff member. In accordance with Library regulations which prescribe the conditions of reader registration and use of Library materials, presentation of a User Card may be required for entry into certain reading rooms. The Library will maintain the information found on the User Cards, including the digitized photograph and other pertinent information, in an automated file for collections security purposes. Access to the automated file shall be limited to only those Library staff whose official duties require access. The automated file shall be physically separated and accessible only from inside the Library.

* * * * *

3. Section 701.6 is amended by redesignating the existing text as paragraph (a), except for the last sentence which will be removed, and adding new paragraphs (b), (c), and (d) to read as follows:

§ 701.6 Service to the collections.

* * * * *

(b) *Definitions.*

(1) *Security* means administration of continuing, effective controls in areas where materials are housed for the purpose of preprocessing or processing, storage, access, or use. These controls are designed to safeguard against theft, loss, misplacement, or damage from improper use or vandalism and may vary as appropriate to the quality, monetary value, replaceability, fragility, or other special or unusual conditions relating to the materials concerned.

(2) *Library material* means:

(i) Items in all formats (including, but not limited to, books and pamphlets; documents; manuscripts; maps; microfiche, microfilms, and other microforms; motion pictures, photographs, posters, prints, drawings, videotapes, and other visual materials; newspapers and periodicals; recorded discs, tapes, or audio/video/digital materials in other formats) either in the collections of the Library of Congress or acquired for and in process for the Library's collections;

(ii) Objects such as musical instruments, printing blocks, copper engraving plates, paintings, and scrolls, and

(iii) Control files, which are manual or automated files essential to the physical or intellectual access to Library materials, such as catalogs, computer tapes, finding aids, and shelflists. These include items that are acquired as an integral part of Library materials and are accessioned into the collections with them permanent inventory records, public catalogs, and other finding aids.

(3) *Security-controlled environment* means, but is not limited to: general and special reading rooms and research facilities where materials are issued under controlled circumstances for use of readers; the bookstacks and other storage facilities where materials are housed when not in use; and work areas where materials are held temporarily for processing.

(c) *General policy for use of Library materials.* Materials retrieved for readers' use shall be used only in assigned reading rooms or research facilities. Use elsewhere in Library buildings requires specific authorization from designated staff members of the custodial unit. Use of materials assigned to reference collections shall be in accordance with established regulations. To minimize the risk of theft, loss, or damage when the materials are removed from designated storage areas, the conditions of availability and use will vary as appropriate to the quality of materials, their monetary value, replaceability, format, physical condition, and the purpose for which they are to be circulated—reader use within the Library, exhibits, preservation, photoduplication, or loan outside the Library. Unless otherwise specified by Library regulations, and/or legal or contractual obligations, the conditions and procedures for use of materials, including duplication, either inside or outside of the Library buildings, shall be determined by or in consultation with the unit head responsible for the custody of the material used.

(1) Any material removed from the security-controlled environment of a reading room or storage area, and meeting the established criteria must be charged as an internal or external loan through the Loan Division, in accordance with established loan regulations. The security of in-process material, and special collections material not meeting the criteria of these regulations, is the responsibility of the division chief or equivalent Library officer with physical control of the material. That division shall determine whether or not a Loan Division internal charge must be created when an item is removed for use. If a Loan Division record is not created, the division shall create and maintain a local record until the item is returned.

(2) When the period of use is completed, all materials shall be returned immediately to the custodial unit to be placed in designated shelf or other locations in assigned storage areas. Charge records for the returned materials shall be removed from the charge files.

(d) *Penalties.* Readers who violate established conditions and/or procedures for using material are subject to penalties to be determined by or in consultation with the unit head responsible for the custody of the material used.

(1) When a reader violates a condition and/or procedure for using material, the division chief or head of the unit where the infraction occurred may, upon written notification, deny further access to the material, or to the unit in which it is housed, to be determined by the nature of the infraction and the material involved.

(2) Within five workdays of receipt of such notification, the reader may make a written request, including the reasons for such request to the Associate Librarian for that service unit, or his/her designee, for a reconsideration of said notification.

(3) The Associate Librarian for that service unit, or his/her designee, shall respond within five workdays of receipt of such request for reconsideration and

may rescind, modify, or reaffirm said notification, as appropriate.

(4) Repeated violations of established conditions and/or procedures for using material may result in denial of further access to the premises and further use of the Library's facilities or revocation of the reader's User Card, in accordance with established access regulations.

(5) Mutilation or theft of Library property also may result in criminal prosecution, as set forth in 18 U.S.C. 641, 1361, and 2071; and 22 D.C. Code 3106.

(6) In certain emergency situations requiring prompt action, the division chief or head of the unit where the infraction occurred immediately may deny further access to the material or unit prior to making written notification action. In such cases, the reader shall be notified, in writing, within three days of the action taken and the reasons therefor. The reader then may request reconsideration.

(7) A copy of any written notification delivered pursuant to this part shall be forwarded to the Captain, Library Police, the service unit, and the Director, Integrated Support Services, for retention.

Dated: June 23, 1995.

James H. Billington,

The Librarian of Congress.

[FR Doc. 95–16323 Filed 7–3–95; 8:45 am]

BILLING CODE 1410–04–P

POSTAL SERVICE

39 CFR Part 111

Changes in Preferred Postage Rates—Second-Class Mail, Third-Class Mail, and Fourth-Class Library Rate Mail

AGENCY: Postal Service.

ACTION: Postage rate changes.

SUMMARY: Public Law No. 103–123 authorizes annual changes in the reduced rates formerly financed by appropriations for revenue forgone. This action implements these changes for fiscal year 1996.

EFFECTIVE DATE: The Board of Governors has directed that the changes pertaining to postage rates be implemented effective 12:01 a.m., Sunday, October 1, 1995.

FOR FURTHER INFORMATION CONTACT: Ernest Collins, (202) 268–5316.

SUPPLEMENTARY INFORMATION: Under 39 U.S.C. 3626(a) and 3642, the Postal Service is authorized to make annual adjustments in the postage rates for second-class in-county per-piece rates, the nonadvertising pound rate and per-piece rates for special second-class publications, the per-piece rates for classroom second-class publications; the special bulk third-class rates; and the fourth-class library rates. These adjustments are necessary to ''phase up'' the institutional-costs contribution of this mail to the statutorily required level by fiscal year 1999.

The rates for the advertising portion of second-class science-of-agriculture publications (under former 39 U.S.C. 4358(f)), zones 1 and 2, will remain the same, at 75 percent of the rates charged on advertising in regular-rate publications, as specified by law. These rates will not change until regular second-class advertising rates change by a general rate case.

The pound rates for second-class in-county mail will remain the same; the advertising pound rates for second-class classroom and special nonprofit publications will remain the same (that is, the same advertising rate charged the advertising in ordinary commercial publications). Consistent with current standards, the advertising rate on the advertising portion of the publication is charged only if the advertising portion exceeds 10 percent of the publication's content.

The Postal Service adopts the following amendments to the Domestic Mail Manual, which is incorporated by reference in the Code of Federal Regulations. See 39 CFR 111.1.

List of Subjects in 39 CFR Part 111

Administrative practice and procedure, Postal Service.

PART 111—[AMENDED]

1. The authority citation for 39 CFR part 111 continues to read as follows:

Authority: 5 U.S.C. 552(a); 39 U.S.C. 101, 401, 403, 404, 3001–3011, 3201–3219, 3403–3406, 3621, 3626, 5001.

Effective October 1, 1995, the Domestic Mail Manual is amended as follows:

2. Sections R200, R300, and R400 are revised to include the new postage rates for second-, third-, and fourth-class mail.

R—Rates and Fees

* * * * *

R200 Second-Class Mail

* * * * *

2.0 IN-COUNTY RATES

* * * * *

2.2 Piece Rates

Per addressed piece:

Level	Regular	ZIP+4 (letter-size)	Barcoded (letter-size)	ZIP+4 barcoded (flat-size)
J1	$0.080	$0.080	$0.080	$0.080
J3	0.080	0.076	0.076	0.065
J5	0.080	0.076	0.063	0.065
K1	0.042	.....	.....	.....
K2	0.037	.....	.....	.....
K3	0.035	.....	.....	.....

* * * * *

3.0 SPECIAL NONPROFIT RATES

3.1 Pound Rates

Pound rates are:

For the nonadvertising portion—$0.140 per pound or fraction.

* * * * *

3.2 Piece Rates

Per addressed piece:

Level	Regular	ZIP+4 (letter-size)	Barcoded (letter-size)	ZIP+4 barcoded (flat-size)
G	$0.208	$0.200	$0.188	$0.181
H3	0.157	0.152	0.145	0.139
H5	0.157	0.152	0.137	0.139
I1	0.112	.....	.....	.....
I2	0.110	.....	.....	.....
I3	0.104	.....	.....	.....

* * * * *

4.0 CLASSROOM RATES

* * * * *

4.2 Piece Rates

Per addressed piece:

Level	Regular	ZIP+4 (letter-size)	Barcoded (letter-size)	ZIP+4 barcoded (flat-size)
G	$0.168	$0.161	$0.151	$0.145
H3	0.125	0.121	0.115	0.110
H5	0.125	0.121	0.108	0.110
I1	0.087			
I2	0.085			
I3	0.080			

* * * * *

R300 Third-Class Mail

* * * * *

6.0 SPECIAL BULK THIRD-CLASS LETTER-SIZE MINIMUM PER-PIECE RATES—PIECES 0.2149 LB. (3.4383 OZ.) OR LESS

Entry discount	Nonautomation rates				Automation rates				
	Basic	3/5	Carrier route	Saturation W–S	Basic ZIP+4	3/5 ZIP+4	Basic barcoded	3-Digit barcoded	5-Digit Barcoded
None	$0.124	$0.111	$0.086	$0.083	$0.117	$0.107	$0.106	$0.101	$0.093
BMC	0.112	0.099	0.074	0.071	0.105	0.095	0.094	0.089	0.081
SCF	0.106	0.093	0.068	0.065	0.099	0.089	0.088	0.083	0.075
Delivery unit			0.063	0.060					

7.0 SPECIAL BULK THIRD-CLASS NONLETTER-SIZE MINIMUM PER-PIECE RATES—PIECES 0.2149 LB. (3.4383 OZ.) OR LESS

Entry discount	Nonautomation rates					Automation Rates				
	Basic	3/5	Carrier route	125–Pc. W–S	Saturation W–S	Basic ZIP+4	3/5 ZIP+4	Basic barcoded	3-Digit barcoded	3/5-Digit barcoded
None	$0.175	$0.161	$0.128	$0.126	$0.121	.....	.....	$0.149	.....	$0.143
BMC	0.163	0.149	0.116	0.114	0.109	.....	.....	0.137	.....	0.130
SCF	0.157	0.143	0.110	0.108	0.103	.....	.....	0.131	.....	0.125
Delivery unit	.....	.....	0.105	0.103	0.098	.....	.....	.....	.....	.....

8.0 SPECIAL BULK THIRD-CLASS PIECE/POUND RATES—PIECES MORE THAN 0.2149 LB. (3.4383 OZ.)

Per piece/pound	Nonautomation Rates					Automation Rates				
	Basic	3/5	Carrier route	125–Pc. W–S	Saturation W–S	Basic ZIP+4	3/5 ZIP+4	Basic barcoded	3-Digit barcoded	3/5-Digit barcoded
Per-Piece Rates (for all entry categories)	$0.074	$0.060	$0.027	$0.025	$0.020	.....	.....	$0.048	.....	$0.042
	Plus					Plus				
Per-Pound Rates (by entry discount)										
None	$0.470	$0.470	$0.470	$0.470	$0.470	.....	.....	$0.470	.....	$0.470

Per piece/pound	Nonautomation Rates					Automation Rates				
	Basic	3/5	Carrier route	125–Pc. W–S	Satura-tion W–S	Basic ZIP+4	3/5 ZIP+4	Basic barcoded	3-Digit barcoded	3/5-Digit barcoded
BMC	0.410	0.410	0.410	0.410	0.410	.....	.....	0.410	.....	0.410
SCF	0.386	0.386	0.38	0.386	0.386	.....	.....	0.386	.....	0.386
Delivery unit	.....	.....	0.362	0.362	0.362	.....	.....	.....	.....	.....

* * * * *

R400 Fourth-Class Mail

* * * * *

6.0 LIBRARY RATES

Weight not exceeding (pounds)	Single-piece rate
1	$1.12
2	1.53
3	1.94
4	2.35
5	2.76
6	3.17
7	3.58
8	3.79
9	3.99
10	4.19
11	4.39
12	4.59
13	4.79
14	4.99
15	5.19
16	5.39
17	5.59
18	5.79
19	5.99
20	6.19
21	6.39
22	6.59
23	6.79
24	6.99
25	7.19
26	7.39
27	7.59
28	7.79
29	7.99
30	8.19
31	8.39
32	8.59
33	8.79
34	8.99
35	9.19
36	9.39
37	9.59
38	9.79
39	9.99
40	10.19
41	10.39
42	10.59
43	10.79
44	10.99
45	11.19
46	11.39
47	11.59
48	11.79
49	11.99
50	12.19
51	12.39
52	12.59
53	12.79
54	12.99
55	13.19
56	13.39
57	13.59
58	13.79
59	13.99
60	14.19
61	14.39
62	14.59
63	14.79
64	14.99
65	15.19
66	15.39
67	15.59
68	15.79
69	15.99
70	16.19

* * * * *

A transmittal letter making these changes in the Domestic Mail Manual will be published and transmitted automatically to subscribers. Notice of issuance of the transmittal letter will be published in the **Federal Register** as provided by 39 CFR 111.3.

Neva R. Watson,

Acting Chief Counsel, Legislative.

[FR Doc. 95–16330 Filed 7–3–95; 8:45 am]

BILLING CODE 7710–12–P

ENVIRONMENTAL PROTECTION AGENCY

40 CFR Part 52

[IN41–1–6343a; FRL–5251–3]

Approval and Promulgation of Implementation Plans; Indiana VOC RACT Catch-ups

AGENCY: Environmental Protection Agency.

ACTION: Direct final rule.

SUMMARY: On August 3, 1994, the Indiana Department of Environmental Management (IDEM)) submitted a SIP revision request which addresses certain reasonably available control technology (RACT) requirements under the Clean Air Act (Act) applicable to all major sources of volatile organic compounds (VOC) located in ozone moderate and above nonattainment areas for which the United States Environmental Protection Agency (USEPA) has not issued or will not issue a control techniques guideline (CTG). The submittal was deemed complete on August 15, 1994. Indiana supplemented its revision request on February 6, 1995. The USEPA is approving this submittal in a final action because all the pertinent Federal requirements have been met. In the proposed rules section of this **Federal Register**, USEPA is proposing approval of and soliciting public comment on this requested SIP revision. If adverse comments are received on this action, USEPA will withdraw this final rule and address the comments received in response to this action in a final rule on the related proposed rule which is being published in the proposed rules section of this **Federal Register**. A second public comment period will not be held unless warranted by significant revisions to this rulemaking based on any comments received in response to this action. Parties interested in commenting on this action should do so at this time.

DATES: This action will be effective September 5, 1995, unless an adverse comment is received by August 4, 1995.

ADDRESSES: Copies of the revision request and USEPA's analysis (Technical Support Document) are available for inspection at the following address: U.S. Environmental Protection Agency, Region 5, Air and Radiation Division, 77 West Jackson Boulevard, Chicago, Illinois 60604. (It is recommended that you telephone Rosanne M. Lindsay at (312) 353–1151 before visiting the Region 5 Office.)

A copy of this SIP revision is available for inspection at: Office of Air and Radiation (OAR) Document and Information Center (Air Docket 6102), Room 1500, U.S. Environmental Protection Agency, 401 M St. SW., Washington DC 20460.

Written comments should be sent to: J. Elmer Bortzer, Chief, Regulation Development Section, Regulation Development Branch (AR–18J), U.S. Environmental Protection Agency, 77 West Jackson Boulevard, Chicago, Illinois 60604.

FOR FURTHER INFORMATION CONTACT: Rosanne M. Lindsay at (312) 353–1151.

SUPPLEMENTARY INFORMATION:

I. Background

The Act, as amended in 1977, required ozone nonattainment areas to adopt RACT rules for sources of VOC emissions. Consequently, the USEPA issued three sets of control technique guideline (CTG) documents, establishing a ''presumptive norm'' for RACT for various categories of VOC sources. The three sets of CTGs are: (1) Group I-issued before January 1978 (15 CTGs); (2) Group II-issued in 1978 (9 CTGs); and (3) Group III-issued in the early 1980's (5 CTGs). Those sources not covered by a CTG are commonly referred to as ''non-CTG sources.''

The USEPA determined that the area's SIP-approved attainment date established which RACT rules the area needed to adopt and implement. Under section 172(a)(1), ozone nonattainment areas were generally required to attain the ozone standard by December 31, 1982. Those areas that submitted an attainment demonstration projecting attainment by that date were required to adopt RACT for sources covered by the Group I and II CTGs. Those areas that sought an extension of the attainment date under section 172(a)(2) to as late as December 31, 1987 were required to adopt RACT for all CTG sources and for all major (i.e., 100 tons per year or more of VOC emissions) non-CTG sources.

On March 3, 1978, the USEPA designated Lake, Porter, Clark and Floyd Counties as nonattainment for ozone, specifying that these areas did not meet the primary standards (43 FR 8964). On July 23, 1982, USEPA reaffirmed these designations (47 FR 31878). See also 40 CFR 81.315. As a result, the RACT requirement of Group I, II and III CTGs remained applicable in these nonattainment areas. On May 26, 1988, USEPA notified the Governor of Indiana that portions of the SIP were inadequate to attain and maintain the ozone standard and requested that existing SIP deficiencies be corrected (USEPA's post 1987 SIP call).

On November 15, 1990, Congress amended the 1977 Act. In amended section 182(a)(2)(A), Congress statutorily adopted the requirement that pre-enacted ozone nonattainment areas that retained their designation of nonattainment and were classified as marginal or above correct their deficient ozone RACT rules by May 15, 1991 (commonly referred to as the RACT ''fix-up'' requirement). The Indiana counties of Lake, Porter, Clark and Floyd retained their designations of nonattainment; and were classified pursuant to Section 181 as severe (Lake and Porter) and moderate (Clark and Floyd) on November 6, 1991 (56 FR 56694). The State submitted revisions to meet the RACT fix-up requirement, and USEPA approved them on March 6, 1992 (57 FR 8082).

In addition to making RACT rule corrections, the amended Act in Section 182(b)(2) requires States to adopt RACT rules for all areas designated nonattainment for ozone and classified as moderate or above. There are three parts to the section 182(b)(2) RACT requirement: (1) RACT for sources covered by an existing CTG (i.e., a CTG issued prior to the enactment of the amended Act of 1990; (2) RACT for sources covered by a post-enactment CTG; and (3) RACT for all major sources not covered by a CTG (''major non-CTG sources''). This RACT requirement essentially mandates that nonattainment areas that previously were exempt from certain VOC RACT requirements ''catch up'' to those nonattainment areas that became subject to those requirements during an earlier period. In addition, it requires newly designated ozone nonattainment areas to adopt RACT rules consistent with those for previously designated nonattainment areas. Finally, under Section 182(d), ozone sources located in areas classified as ''severe'' are considered ''major'' sources if they have the potential to emit 25 tons per year or more of VOC.

Therefore, under these RACT catch-up provisions, Indiana was required to submit RACT rules for sources in the affected counties which were covered by both pre- and post-enactment CTGs,[1] as well as all non-CTG major sources. Also, pursuant to Section 182(d), sources located in the severe nonattainment counties of Lake and Porter are considered major if their potential to emit is at least 25 tons per year of VOC.

On May 4, 1994, the Indiana Air Pollution Control Board adopted 326 IAC 8–7, ''Specific VOC Reduction Requirements for Lake, Porter, Clark and Floyd Counties.'' In addition, as part of its rulemaking, Indiana amended its definition of ''federally enforceable'' and ''Reasonably available control technology'' in 326 IAC 1–2. An emergency rule was adopted on August 3, 1994, in accordance with IC 4–22–2–37.1, it was effective for 90 days and was extended an additional 90 days. The State adopted the revised rule on August 5, 1994. The State supplemented its original submittal to USEPA on February 6, 1995.

[1] Indiana has addressed these RACT catch-up requirements in other submissions, which USEPA will address in separate actions.

II. Analysis of State Submittal

The USEPA's analysis of the State submittal is summarized below. A more detailed analysis of the State's submittal is contained in a May 15, 1995 rational document which is available at the Regional Office listed above. In determining the approvability of this VOC rule, USEPA evaluated the rule for consistency with Federal requirements, including section 110 and part D of the Act, applicable regulations and USEPA's Model VOC rules.

The Indiana non-CTG RACT rule applies to stationary sources in the severe ozone nonattainment area of Lake and Porter Counties, as well as the moderate ozone nonattainment area of Clark and Floyd Counties, and reflects the lowering of the major source definition from 100 tons per year to 25 tons for Lake and Porter Counties only. The rule also applies to sources in the above affected counties which have coating facilities with the potential to emit 10–25 tons per year (TPY) of VOC, (Lake and Porter) or 40–100 TPY of VOC (Clark and Floyd).

In the determination of applicability cut-offs, the owner/operator of a source shall include total potential VOC emissions from the following facilities: (a) 326 IAC 8–2 (surface coating operations); (b) 326 IAC 8–3 (organic solvent degreasing); (c) 326 IAC 8–4 (petroleum operations); (d) 326 IAC 8–5 (miscellaneous operations); and facilities of the following types: (e) fuel combustion facilities; (f) wastewater treatment plants; (g) coke ovens, including by-product ovens; (h) barge loading facilities; (i) jet engine test cells; (j) iron and steel production facilities; and (k) vegetable oil processing facilities.

Sources covered by this rule are allowed to demonstrate compliance by choosing among any one of the following three available options: (1) Achieve an overall VOC reduction in baseline actual emissions of ninety-eight percent (98%) by the addition of add-on controls or documented reduction in VOC-containing materials used; (2) achieve a level of reduction equal to eighty-one percent (81%) of baseline actual emissions by the same means as stated above, where it is demonstrated that a 98% reduction in source emissions is not achievable; or (3) achieve an alternative overall emission reduction by the application of RACT as determined by the State and USEPA.

Compliance with these options requires sources to submit a compliance plan to the State before December 31, 1994 for approval. Specific compliance plan requirements are dependent on the

chosen compliance option. Compliance with option (1) or (2) by reducing VOC-containing materials requires the owner/operator to submit an approved compliance plan with the source's operating permit application under 40 CFR part 70 (Title 5) permit. The part 70 federally enforceable permit will incorporate the compliance plan, which will include limits reflecting the following: averaging periods no longer than daily; VOC content of process materials; capture and control efficiencies; appropriate test methods; and recordkeeping and reporting requirements. Prior to the compliance deadline of May 31, 1995, major sources in Lake, Porter, Clark and Floyd Counties can be exempt from RACT if they limit their emissions through federally enforceable state operating permits (FESOPs). (The State submitted a FESOP program on October 25, 1994, which is under review.) Prior to a USEPA-approved Indiana FESOP program, operating permits which limit emissions below the cut-off shall be submitted to USEPA as SIP revisions.

It should be noted that if a source chooses to comply with an alternative RACT overall emission reduction (option (3)), it must submit a petition to the State consistent with the procedures in 326 IAC 8–1–5. Under 8–1–5(c), all site-specific RACT plans must be submitted to and approved by USEPA as SIP revisions.

The rule also contains provisions consistent with the June 1992 Model VOC Rule for the operation, maintenance and testing of control devices at those affected facilities choosing to use add-on controls as the method of compliance.

III. Final Rulemaking Action

Based upon the review of the materials submitted by the State of Indiana, the USEPA has determined that the rules governing the VOC emissions from sources subject to non-CTG RACT requirements are consistent with the Act. Because USEPA considers this action noncontroversial and routine, we are approving it without prior proposal.

The amendments consist of a new rule, ''Specific VOC Reduction Requirements for Lake, Porter, Clark and Floyd Counties'' (326 IAC 8–7), and new definitions (326 IAC 1–2).

The USEPA is approving this action without prior proposal because USEPA views this as a noncontroversial amendment and anticipates no adverse comments. However, in a separate document in today's issue of the **Federal Register,** the USEPA is proposing to approve the requested SIP revision should adverse or critical comments be filed. This action will be effective on September 5, 1995 unless adverse or critical comments are received by August 4, 1995.

If the USEPA receives such comments, this action will be withdrawn before the effective date by publishing a subsequent **Federal Register** document that withdraws this final action. All public comments received will then be addressed in a subsequent final rule based on this action serving as a proposed rule. The USEPA will not institute a second comment period on this action, unless warranted by significant revision to this rule based on any comments received in response to this action. Any parties interested in commenting on this action should do so at this time. If no such comments are received, the public is advised that this action will be effective September 5, 1995.

This action has been classified as a Table 2 action by the Regional Administrator under the procedures published in the **Federal Register** on January 19, 1989 (54 FR 2214–2225), as revised by an October 4, 1993, memorandum from Michael H. Shapiro, Acting Assistant Administrator for Air and Radiation. The Office of Management and Budget has exempted this regulatory action from Executive Order 12866 review.

Nothing in this action should be construed as permitting, allowing or establishing a precedent for any future request for revision to any SIP. USEPA shall consider each request for revision to the SIP in light of specific technical, economic, and environmental factors and in relation to relevant statutory and regulatory requirements.

Under the Regulatory Flexibility Act, 5 U.S.C. 600 et seq., USEPA must prepare a regulatory flexibility analysis assessing the impact of any proposed or final rule on small entities. (5 U.S.C. 603 and 604.) Alternatively, USEPA may certify that the rule will not have a significant impact on a substantial number of small entities. Small entities include small businesses, small not-for-profit enterprises, and government entities with jurisdiction over populations of less than 50,000.

Under Section 202 of the Unfunded Mandates Reform Act of 1995 (''Unfunded Mandates Act''), signed into law on March 22, 1995, the USEPA must prepare a budgetary impact statement to accompany any proposed or final rule that includes a Federal mandate that may result in estimated costs to State, local, or tribal governments in the aggregate; or to the private sector, of $100 million or more. Under Section 205, the USEPA must select the most cost-effective and least burdensome alternative that achieves the objectives of the rule and is consistent with statutory requirements. Section 203 requires the USEPA to establish a plan for informing and advising any small governments that may be significantly or uniquely impacted by the rule.

The USEPA has determined that the approval action promulgated today does not include a Federal mandate that may result in estimated costs of $100 million or more to either State, local, or tribal governments in the aggregate, or to the private sector.

This Federal action approves pre-existing requirements under State or local law, and imposes no new Federal requirements. Accordingly, no additional costs to State, local, or tribal governments, or the private sector, result from this action.

SIP approvals under section 110 and subchapter I, part D of the Clean Air Act do not create any new requirements, but simply approve requirements that the State is already imposing. Therefore, because the Federal SIP-approval does not impose any new requirements, I certify that it does not have a significant impact on any small entities affected. Moreover, due to the nature of the Federal-State relationship under the Act, preparation of a regulatory flexibility analysis would constitute Federal inquiry into the economic reasonableness of the State action. The Clean Air Act forbids USEPA to base its actions concerning SIPs on such grounds. *Union Electric Co.* v. *USEPA*, 427 U.S. 246, 256–66 (S.Ct. 1976); 42 U.S.C. 7410(a)(2).

Under section 307(b)(1) of the Clean Air Act, petitions for judicial review of this action must be filed in the United States Court of Appeals for the appropriate circuit by September 5, 1995. Filing a petition for reconsideration by the Administrator of this final rule does not affect the finality of this rule for the purposes of judicial review nor does it extend the time within which a petition for judicial review may be filed, and shall not postpone the effectiveness of such rule or action. This action may not be challenged later in proceedings to enforce its requirements. (See Section 307(b)(2)).

List of Subjects in 40 CFR Part 52

Environmental protection, Air pollution control, Incorporation by reference.

Dated: June 22, 1995.

David A. Ullrich,

Acting Regional Administrator.

Part 52, chapter I, title 40 of the Code of Federal Regulations is amended as follows:

PART 52—[AMENDED]

1. The authority citation for part 52 continues to read as follows:

Authority: 42 U.S.C. 7401–7671q.

Subpart P—Indiana

2. Section 52.770 is amended by adding paragraph (c)(96) to read as follows:

§ 52.770 Identification of plan.

* * * * *

(c) * * *

(96) On August 3, 1994 and February 6, 1995, the Indiana Department of Environmental Management submitted a requested SIP revision to the ozone plan for ozone nonattainment areas.

(i) *Incorporation by reference.*

(A) Indiana Administrative Code, Title 326: Air Pollution Control Board, Article 1: General Provisions, Rule 2: Definitions, Section 22.5 ''Department'' definition, Section 28.5 ''Federally enforceable'' definition, and Section 64.1 ''Reasonably available control technology'' or ''RACT'' definition. Added at 18 *Indiana Register* 1223–4, effective January 21, 1995.

(B) Indiana Administrative Code, Title 326: Air Pollution Control Board, Article 8: Volatile Organic Compound Rules, Rule 7: Specific VOC Reduction Requirements for Lake, Porter, Clark, and Floyd Counties. Added at 18 *Indiana Register* 1224–9, effective January 21, 1995.

[FR Doc. 95–16359 Filed 7–3–95; 8:45 am]

BILLING CODE 6560–50–P

---

40 CFR Parts 52 and 81

[NC–061–1–7010; FRL–5226–3]

Approval and Promulgation of Implementation Plans and Designation of Areas for Air Quality Planning Purposes; State of North Carolina

AGENCY: Environmental Protection Agency (EPA).

ACTION: Final rule.

SUMMARY: EPA is approving a maintenance plan and a request to redesignate the Charlotte-Gastonia area from nonattainment to attainment for ozone (O_3) submitted on November 12, 1993, by the State of North Carolina through the North Carolina Department of Environment, Health, and Natural Resources. Subsequently on December 16, 1994, January 6, 1995, and May 23, 1995, the State submitted supplementary information which included refined modeling and revisions to the maintenance plan. The Charlotte-Gastonia O_3 nonattainment area includes Mecklenburg and Gaston Counties. EPA is also approving the State of North Carolina's 1990 baseline emissions inventory because it meets EPA's requirements regarding the approval of baseline emission inventories.

EFFECTIVE DATE: July 5, 1995.

ADDRESSES: Copies of the documents relative to this action are available for public inspection during normal business hours at the following locations. The interested persons wanting to examine these documents should make an appointment with the appropriate office at least 24 hours before the visiting day.

Air and Radiation Docket and Information Center (Air Docket 6102), U.S. Environmental Protection Agency, 401 M Street, SW, Washington, DC 20460.

Environmental Protection Agency, Region 4 Air Programs Branch, 345 Courtland Street, NE, Atlanta, Georgia 30365.

State of North Carolina, Air Quality Section, Division of Environmental Management, North Carolina Department of Environment, Health, and Natural Resources, Raleigh, North Carolina 27626.

Environmental Management Division, Mecklenburg County Department of Environmental Protection, 700 N. Tryon Street, Charlotte, North Carolina 28202–2236.

FOR FURTHER INFORMATION CONTACT: Kay Prince, Regulatory Planning and Development Section, Air Programs Branch, Air, Pesticides & Toxics Management Division, Region 4 Environmental Protection Agency, 345 Courtland Street, NE, Atlanta, Georgia 30365. The telephone number is 404/347–3555 extension 4221. Reference file NC–061–1–6815.

SUPPLEMENTARY INFORMATION: On November 15, 1990, the Clean Air Act Amendments of 1990 were enacted. (Pub. L. 101–549, 104 Stat. 2399, codified at 42 U.S.C. 7401–7671q). Under section 107(d)(1)(C), EPA designated Mecklenburg County of the Charlotte-Gastonia area as nonattainment by operation of law with respect to O_3 because the area was designated nonattainment immediately before November 15, 1990. The nonattainment area was expanded to include Gaston County per section 107(d)(1)(A)(i) (See 56 FR 56694 (Nov. 6, 1991) and 57 FR 56762 (Nov. 30, 1992), codified at 40 CFR 81.318.) The area was classified as moderate.

The moderate nonattainment area had ambient monitoring data that showed no violations of the O_3 NAAQS, during the period from 1990 through 1993. Therefore, on November 12, 1993, the State of North Carolina submitted an O_3 maintenance plan and requested redesignation of the area to attainment with respect to the O_3 NAAQS. The O_3 NAAQS continues to be maintained in the Charlotte-Gastonia area. On January 24, 1994, Region 4 determined that the information received from the State constituted a complete redesignation request under the general completeness criteria of 40 CFR 51, appendix V, sections 2.1 and 2.2. Subsequently, on December 16, 1994, and January 6, 1995, the State submitted additional information that refined the modeling and clarified the future measures needed to ensure maintenance of the O_3 NAAQS. The State requested the January 6, 1995, information be parallel processed by EPA. The State held a public hearing on April 19, 1995, and made a final submittal to EPA on May 23, 1995.

The North Carolina redesignation request for the Charlotte-Gastonia moderate O_3 nonattainment area meets the five requirements of section 107(d)(3)(E) for redesignation to attainment. The following is a brief description of how the State of North Carolina has fulfilled each of these requirements. Because the maintenance plan is a critical element of the redesignation request, EPA will discuss its evaluation of the maintenance plan under its analysis of the redesignation request.

1. The Area Must Have Attained the O_3 NAAQS

The State of North Carolina's request is based on an analysis of quality assured ambient air quality monitoring data, which is relevant to the maintenance plan and to the redesignation request. Most recent ambient air quality monitoring data for calendar year 1990 through calendar year 1994 demonstrates attainment of the standard. The State of North Carolina has committed to continue monitoring the moderate nonattainment area in accordance with 40 CFR 58. Therefore, the State has met this requirement. For detailed information refer to the proposed document published April 17, 1995 (60 FR 19197).

2. The Area Has Met All Applicable Requirements Under Section 110 and Part D of the CAA

EPA reviewed the North Carolina SIP and ensures that it contains all measures due under the amended CAA prior to or at the time the State of North Carolina submitted its redesignation request. For detailed information regarding applicable requirements other than section 182(f), refer to the proposed document.

A. Section 182(a)(1)—Emissions Inventory

North Carolina has met this requirement. This document gives final approval of the 1990 base line emissions inventory. For detailed information regarding how this requirement was met, refer to the proposal document.

B. Section 182(a)(2), 182(b)(2)—Reasonably Available Control Technology (RACT)

As stated in the proposal document, North Carolina had met all RACT requirements except those in 182(b)(2), RACT Catch-ups. On January 7, 1994, the State submitted revisions to the SIP that addressed the RACT Catch-ups. The document approving those revisions was published on January 26, 1995 (see 60 FR 5138), and became effective on March 27, 1995. Therefore this requirement has been met. For detailed information regarding this requirement, refer to the proposal document.

C. Section 182(a)(3)—Emissions Statements

In the proposal document, EPA stated that the North Carolina Emissions Statement regulation must be approved prior to or at the time of redesignation. On December 17, 1993, North Carolina submitted a revision to the SIP that met the requirements for an emission statement regulation. The document approving this revision was published on May 5, 1995 (see 60 FR 22284). No adverse comments were received, therefore, the effective date of the federal approval is July 5, 1995. Therefore this requirement has been met. For detailed information regarding this requirement, refer to the proposal document.

D. Section 182(b)(1)—15% Progress Plans

With the approval of this redesignation request, the requirement to submit a 15% plan is obviated because the redesignation request predated the requirement for a 15% plan. Additionally, on May 10, 1995, EPA, in a memorandum from John S. Seitz, Director, Office of Air Quality Planning and Standards, issued a new policy regarding planning requirements of the CAA. Areas that have quality assured air monitoring data showing attainment with the ozone standard for the most recent three years are deemed to have attained the standard and such are not subject to certain requirements of subpart 2 of Part D of title I of the CAA. Specifically, a moderate area such as Charlotte-Gastonia would no longer be required to submit a 15% plan or an attainment demonstration. EPA has published a document making such finding with respect to the Charlotte-Gastonia area. See the proposal document for more detailed information.

E. Section 182(b)(3)—Stage II

On January 24, 1994, EPA promulgated the onboard vapor recovery rule (OBVR), and, section 202(a)(b) of the CAA provides that once the rule is promulgated, moderate areas are no longer required to implement Stage II. Thus, the Stage II vapor recovery requirement of section 182(b)(3) is no longer an applicable requirement. See the proposal document for more detailed information.

F. Section 182(b)(4)—Motor Vehicle Inspection and Maintenance (I/M)

In the proposal document, EPA stated that the North Carolina I/M regulation must be approved prior to or at the time of redesignation. On July 19, 1993, North Carolina submitted a revision to the SIP that met the requirements for an I/M regulation. The document approving this revision was published on June 2, 1995 (see 60 FR 28720), and the revision is federally approved. For detailed information regarding this requirement, refer to the proposal document.

G. Section 182(b)(5)—New Source Review (NSR)

North Carolina has a fully-approved NSR program for moderate O_3 nonattainment areas. For detailed information regarding this requirement, refer to the proposal document.

H. Section 182(f)—Oxides of Nitrogen (NO_X) Requirements

This redesignation request predated the November 15, 1993, requirement for the submittal of NO_X RACT rules. Therefore, NO_X RACT is not an applicable requirement for purposes of this redesignation request. However, the State has submitted revisions that would require NO_X RACT should the area violate the O_3 NAAQS. This submittal pre-adopts NO_X RACT rules as a contingency measure. Since contingency measures for maintenance are not required to be pre-adopted, approval of this submittal is not a requirement for redesignation. Action on that submittal will be taken in another document since it is not an applicable requirement for purposes of this redesignation request. For more detailed information regarding this requirement, refer to the proposal document.

3. The Area Has a Fully Approved SIP Under Section 110(k) of the CAA

Based on the approval of provisions under the pre-amended CAA and EPA's prior approval of SIP revisions under the amended CAA, EPA has determined that the Charlotte-Gastonia area has a fully approved O_3 SIP under section 110(k).

4. The Air Quality Improvement Must Be Permanent and Enforceable

Several control measures have come into place since the Charlotte-Gastonia nonattainment area violated the O_3 NAAQS. Of these control measures, the reduction of fuel volatility from 10.6 psi in 1987 to less than 9.0 psi in 1990, and finally to less than 7.8 psi beginning with the summer of 1992, as measured by the Reid Vapor Pressure (RVP), and fleet turnover due to the Federal Motor Vehicle Control Program (FMVCP) produced the most significant decreases in VOC emissions. The reduction in VOC emissions due to the mobile source regulations from 1987 to 1990 is 26.01 tons per day (29.63%). The VOC emissions in the base year are not artificially low due to a depressed economy.

5. The Area Must Have a Fully Approved Maintenance Plan Pursuant to Section 175A of the CAA

Section 175A of the CAA sets forth the elements of a maintenance plan for areas seeking redesignation from nonattainment to attainment. The plan must demonstrate continued attainment of the applicable NAAQS for at least ten years after the Administrator approves a redesignation to attainment. Eight years after the redesignation, the state must submit a revised maintenance plan which demonstrates attainment for the ten years following the initial ten-year period. To provide for the possibility of future NAAQS violations, the maintenance plan must contain contingency measures, with a schedule for implementation, adequate to assure prompt correction of any air quality problems.

EPA is approving the State of North Carolina's maintenance plan for the Charlotte-Gastonia nonattainment area

because EPA finds that the State's submittal meets the requirements of section 175A.

A. Emissions Inventory

a. Base Year Inventory

On November 13, 1992, the State of North Carolina submitted comprehensive inventories of VOC, NO_X, and carbon monoxide (CO) emissions from the Charlotte-Gastonia nonattainment area. The inventory included biogenic, area, stationary, and mobile sources for 1990.

The State of North Carolina submittal contains the detailed inventory data and summaries by county and source category. Finally, this inventory was prepared in accordance with EPA guidance. This action approves the final base year inventory for the Charlotte-Gastonia area. A summary of the base year inventory is included in the table below.

1990 CHARLOTTE/GASTONIA TYPICAL SUMMER DAY EMISSIONS TONS PER DAY (TPD)

Category	NO_X	VOC	CO
Point	31.25	33.99	35.27
Area	4.92	67.59	25.00
Non-road	15.52	19.38	138.45
Biogenic	2.78	54.41	0
Mobile	61.64	50.81	371.26
Total	116.11	226.18	569.98

b. Emission Budget for Conformity

EPA's transportation conformity regulation requires that states adopt an emissions budget for conformity for ozone precursors in maintenance areas. Therefore, the State of North Carolina has adopted the following emissions budget:

CONFORMITY EMISSIONS BUDGET

Source cat. and county	1999 NO_X (TPD)	1999 VOC (TPD)	2005 NO_X (TPD)	2005 VOC (TPD)
Mobile:				
Mecklenburg	33.5	25.5	33.0	25.9
Gaston	9.3	6.3	8.7	5.7
Point:				
Mecklenburg	2.6	23.0	2.8	24.3
Gaston	79.5	7.3	79.7	7.5
Area:				
Mecklenburg	3.7	23.0	3.9	33.3
Gaston	1.3	16.7	1.4	16.5
Non-road:				
Mecklenburg	18.6	20.2	17.8	22.5
Gaston	4.8	5.6	4.1	5.8

EPA will be taking separate rulemaking action on conformity emission budgets.

B. Demonstration of Maintenance—Urban Airshed Modeling

a. Control Strategy

The plan must demonstrate maintenance for at least 10 years. The North Carolina plan demonstrates maintenance out to the year 2005 through the use of the Urban Airshed Model (UAM). On December 16, 1994 and January 6, 1995, the State submitted a revision to the original maintenance plan submitted to EPA on November 12, 1993, requesting that EPA parallel process the revisions. These submittals which included revisions to the modeling pursuant to EPA comment and additional corrections to the modeling were presented at the public hearing held in Charlotte on April 19, 1995. The modeling analysis included base and future case modeling completed according to guidelines presented in the EPA document ''Guideline for Regulatory Application of the Urban Airshed Model.'' The future case modeling includes the interim year 1999 and the 10 year maintenance year of 2005. This modeling analysis did not assume any benefit from the NSR program.

Modeling for all three episodes predicted a small number of grid cells (< 1 %) above .124 parts per million (ppm) for both 1999 and 2005, with the maximum level predicted of .129 ppm. The analysis of control options showed that NO_X controls would be more effective in the maintenance of the standard in the Charlotte/Gastonia area, and, hence, the State originally selected a strategy that consisted primarily of additional controls of NO_X emissions. The selected control strategy included the following measures:

- Reformulated Gasoline to meet the Federal Phase I and Phase II standards to begin in 1999 in Mecklenburg, Gaston, Union, Cabarrus, Lincoln, Rowan, and Iredell Counties;
- Clean Fuel Fleet Program, including the schedule for implementation as specified in the CAA for areas classified serious and above, in the same seven counties previously listed;
- Burning bans in the seven counties for the months of June, July, and August;
- Control of NO_X for the Transcontinental Natural Gas Pumping Station in Iredell County for the months of June, July, and August; and
- Additional 10 percent control beyond the control being applied to meet title IV NO_X requirements on Duke Power's Allen and Riverbend facilities in Gaston County for the months of June, July, and August.

The State also took comment at the public hearing on the feasibility of substituting an enhanced I/M program for the reformulated gasoline measure. The modeling results indicate that such substitution would show maintenance of the standard. After consideration of the comments at the public hearing, the North Carolina Environmental Management Commission adopted the maintenance plan without additional controls on May 11, 1995.

2. Request for Comments

As requested by the State, EPA is parallel processing the request and therefore published a document on April 17, 1995, proposing approval of the maintenance plan and redesignation request and soliciting comment on the following control scenarios:

a. Adoption and implementation in 1999 of the five measures as detailed above;

b. Adoption and implementation in 1999 of the five measures as detailed above with enhanced I/M substituted for the reformulated gasoline program;

c. Adoption and implementation in 1999 of the aforementioned controls on the Transcontinental Natural Gas Pumping Station in Iredell County and the additional 10 percent control beyond the title IV requirements on Duke Power's Allen and Riverbend facilities in Gaston County; or

d. Approval of the request as demonstrating maintenance with no additional VOC or NO_X controls.

EPA received a number of comments on the proposal and the control scenarios. Those comments and the response thereto are summarized below.

Comment #1—Rather than controlling emissions, the plan allows an increase in NO_X emissions of 25 tons per day by 1999 in the nonattainment area and additional increases throughout the modeling domain.

Response—Section 175A of the CAA requires that a plan showing maintenance of the applicable NAAQS for 10 years after redesignation be incorporated as revision to the SIP. In a September 4, 1992, memorandum from John Calcagni, Director, Air Quality Management Division, EPA issued guidance on the requirements for redesignation of areas from nonattainment to attainment. That guidance contains two primary methods a state may use to demonstrate maintenance of the O_3 NAAQS for an area. The first method is an emissions inventory demonstration which includes emission projections showing no increases in emissions of O_3 precursors, i.e., NO_X and VOC, in the designated nonattainment area throughout the 10 year maintenance period. This method would not allow the projected increase in emissions of NO_X in the nonattainment counties. The second method is a modeling demonstration showing that the projected levels of emissions of O_3 precursors would not cause a violation of the NAAQS. The guidance further stipulates that the level of modeling required must be at least that required by the CAA for an attainment demonstration for the area. Since the Charlotte-Gastonia area is a moderate intra-state area, the level of modeling required would have been EKMA or its equivalent. However, the State of North Carolina chose to use the UAM model which is required for inter-state moderate areas as well as serious and above areas.

For the reasons explained in the proposal and in the responses to comments on the modeling provided below, EPA believes that the modeling demonstration, which evaluated a strategy with a combination of decreases in VOC emissions and increases in NO_X emissions, submitted by the State of North Carolina adequately demonstrated maintenance of the NAAQS notwithstanding the projected increase in NO_X emissions. Therefore, EPA believes that the increases in NO_X emissions are permissible.

Comment #2—Concern was expressed regarding the emission increases projected for Duke Power sources located in the area. It was suggested that for equity, Duke Power should be required or provided incentives to install additional emission controls.

Response—The Duke Power plants in question are subject to EPA's acid rain provisions and reductions in NO_X emissions will be obtained from this program. Neither the CAA nor the EPA require a specific set of measures to ensure maintenance of the O_3 NAAQS, but rather the state determines for each area what additional reductions, if any, are necessary. The EPA then determines the adequacy of the plan. EPA has determined, as explained elsewhere, in this document and the proposal, that the existing control system is adequate to ensure maintenance of the NAAQS for ten years.

Comment #3—North Carolina has consistently stated that additional controls are necessary to maintain the standard and that controls on sources of NO_X emissions are the most effective.

Response—The State's assertion that additional NO_X controls would be necessary to maintain the NAAQS after 1999 was based on the UAM modeling and the view that every grid cell must be below the standard in order to demonstrate maintenance. However, EPA has determined, as discussed in the proposal and elsewhere in this document, that the State's modeling demonstration adequately demonstrates maintenance of the NAAQS without additional control measures.

Comment #4—Monitored daily maximum ozone concentrations over the last five years indicate that the nonattainment area has been on the verge of violating the O_3 NAAQS. Furthermore, the modeling predicts future exceedances of the NAAQS for all three episodes.

Response—Although two monitors in the ozone nonattainment area and one monitor in an adjacent county recorded two exceedances of the O_3 NAAQS in 1993, there have been no violations of the NAAQS in the last five years. Furthermore, there were no exceedances recorded at any monitor in the area in 1992 or 1994. An area is allowed one exceedance of the NAAQS per year with a three year average used to determine attainment/nonattainment status. Therefore, since the expected exceedance rate for the area is 0.67 which is less than 1.1 and since all monitors are currently monitoring attainment of the NAAQS, EPA believes that the monitoring data is sufficient to support redesignation of the area to attainment. EPA's Response to the comments regarding the modeling is contained in EPA's Response to Comment #5.

Comment #5—One Commenter provided detailed Comments individually on each of the six items listed in the proposal as support for EPA's determination that the modeling demonstration is sufficiently conservative for EPA to conclude that the NAAQS can be maintained without additional emission controls. In the proposal, EPA explained that while its modeling guidance generally requires that modeling results show attainment of the standard in all grid cells, it does allow alternative methods for demonstrating attainment on a case-by-case basis. EPA went on to explain its belief that North Carolina's modeling for the Charlotte-Gastonia area was sufficiently conservative to provide an adequate demonstration of maintenance without the adoption of additional controls notwithstanding the model's prediction of slight exceedances of the standard in a few grid cells. That belief was based on the combination of the following six factors:

(1) North Carolina has five years of air quality data showing attainment of the standard.

(2) The maintenance plan contains pre-adopted measures and a violation would trigger reduction in emissions by the following O_3 season.

(3) The O_3 standard is a statistically based NAAQS that allows one exceedance per year.

(4) North Carolina has done extensive modeling to gain an understanding of the creation of O_3 in the Charlotte area and has generally made conservative assumptions in selecting modeling inputs.

(5) The uncertainties in the biogenic emission inventory and other modeling inputs are well within the range of the 2–3 ppb needed to reach the .124 ppm in all grid cells.

(6) The modeling did not account for lower VOC, NO_X and O_3 boundary conditions expected when SIP attainment and title IV (acid rain program) control programs have been

implemented in many areas throughout the United States.

This commenter took issue with each of the six factors that EPA referenced in the proposal.

Response—Before responding to the comments on each of the six factors individually, EPA notes that, as indicated in the proposal, it was the combination of factors—not necessarily any particular factor standing alone—that supports EPA's determination that the modeling provides an adequate demonstration that the ozone NAAQS will be maintained in the absence of the adoption of additional control measures. Furthermore, as explained below, the Comments made with respect to each of the factors individually fail to undermine the validity of EPA's conclusion that the modeling provides an adequate demonstration of maintenance. Although the commenter made relevant points, EPA believes that when considered together, on balance the factors support the conclusion that North Carolina has adequately demonstrated that the Charlotte-Gastonia area will maintain the standard.

(1) North Carolina has five years of air quality data showing attainment of the standard.

With three years of air quality showing attainment an area can request redesignation. North Carolina's request is strengthened by the fact that it has five years of air quality data showing no violations of the O_3 NAAQS.

Based upon a trend analysis performed by EPA, meteorologically adjusted O_3 trends in Charlotte (and surrounding areas) have shown a modest but consistent improvement of approximately 1 percent per year between 1983 and 1993. However, the most recent five years analyzed (1988–1993) have shown an accelerated rate of improvement of approximately 2 to 3 percent per year (10 percent over the five year period) suggesting that recent ozone air quality is improving when meteorological conditions are eliminated.

Moreover, EPA has conducted an analysis of the O_3 potential in the major urban areas, including Charlotte, using available meteorological data collected over the past 41 years. The study (currently undergoing review for publication in *Atmospheric Environment*), indicates that meteorological conditions favoring high O_3 ranked the summer of 1993 as the 2nd most severe O_3 year in the past 41 years. The two years, 1988 and 1987 were ranked 7th and 4th, respectively. The meteorology for all three years was very conducive to producing high O_3 concentrations. Since North Carolina did not have a violation in 1993 under meteorological conditions of comparable severity to the 1988 and 1987 modeling analyses, this supports the redesignation demonstration.

Although NO_X emissions are projected to increase over the maintenance period, i.e. from the 1990 base line inventory, the State of North Carolina's experience in other similar areas (Raleigh/Durham and Greensboro/Winston-Salem) suggests that total NO_X emissions in 1999 will be less than 1993. Specifically, the projected emissions from the three area power plants in 1999 that are the area's primary NO_X sources are less than the actual emissions from those plants in 1993. Since the area was able to maintain the standard despite the higher NO_X emissions and adverse meteorological conditions in 1993, it would be expected that the projected decrease in power plant emissions would support the ability for the area to continue to maintain the O_3 NAAQS.

(2) The maintenance plan contains pre-adopted measures and a violation would trigger reduction in emissions by the following ozone season. While it is true that the presence of pre-adopted measures in the maintenance plan triggered by a violation does not make the modeling analysis conservative, it does add strength to the package as a whole and will allow the State to implement new controls to quickly address any future nonattainment problem. The State has done preliminary modeling analysis on both the pre-adopted and the other contingency measures listed in the plan which will assist the State in timely implementation of the most effective measures.

Additionally, the contingency plan contains a secondary trigger which is an exceedance of the ozone standard that would indicate a violation could be imminent. This trigger will be activated within 30 days of the State finding the exceedance. Once the secondary trigger is activated, the State Air Quality Section will commence analysis, including updated modeling as necessary, to determine what control measures will be required to keep the area in attainment, with the regulatory adoption process for any necessary measures beginning by May 1 of the following year. As the contingency measures based on the secondary trigger should help the area stay in attainment, those measures should also help the area maintain the standard and do provide an additional level of assurance that the area will maintain the standard.

(3) The O_3 standard is a statistically based NAAQS that allows one exceedance per year.

Developing an attainment test using gridded concentrations for a few selected days to match a NAAQS determination which uses sparsely located monitors for a complete hourly O_3 season is not simple. Recognizing the severity of O_3 forming potential for selected episodes, as well as the NAAQS allowing one exceedance at each monitor location over a three year period, led EPA to consider how stringent the model test of requiring every grid cell modeled across the domain to be below 124 ppb for all hours might be. Again, based on the severity of the years modeled, EPA believes the modeling demonstration indicates that a few grid cells would exceed 124 ppb by a slight amount (less than 1% with a maximum value of 129 ppb) is within a margin of safety that the NAAQS will be maintained provided the contingency measures in the plan are identified and implemented, if the need is indicated by monitored data. As indicated previously, the State's plan contains a secondary trigger for contingency measures based on an exceedance of the O_3 NAAQS that would indicate a violation is imminent.

(4) North Carolina has done extensive modeling to gain an understanding of the creation of O_3 in the Charlotte area and has generally made conservative assumptions in selecting modeling inputs.

EPA recognizes and allows for uncertainty in model estimates as part of the model performance evaluation conducted prior to use in strategy development. EPA guidance includes recommended ranges for statistical performance measures. For the North Carolina application, although model estimates were sometimes below the observed highest concentrations (base case), overall the performance results suggest that UAM is unbiased and is therefore expected to produce unbiased estimates of future air quality assuming unbiased (non-conservative) estimates of future emissions and boundary conditions are used.

In fact, North Carolina *was* conservative in its choice of model, years to simulate, boundary conditions and emissions growth factors. Although, North Carolina was not required to do so, it chose to use UAM so as to better understand and quantify the effect of ozone precursors in the area and thus identify the most cost effective strategy for maintaining the NAAQS. EPA believes North Carolina did select years that are conducive to high levels of O_3 (also see discussion above) and chose

episodes for which some of the highest O_3 levels were observed in the area. North Carolina used boundary concentrations along the North Carolina domain that were only reduced by 5 percent (O_3, NO_X, and VOC) so that the maximum level of ozone was 120 ppb for the July 1988 northerly transport episode. It is quite likely that the combined effect of VOC/NO_X controls throughout the eastern U.S. will result in O_3 boundary levels that are below those used in this modeling exercise. Finally, North Carolina used the 1990 BEA growth factors to project emissions. These factors were derived before the CAA mandated controls were implemented and do not take into consideration changes in business behavior that has occurred as companies have applied expenditures towards control measures rather than expansion. Also, the 6 year window, 1988–93, used to estimate VMT growth includes very high growth years and the area is not expected to continue to grow at that rate. If the State had elected to use lower boundary conditions and lower growth rates, as allowed by EPA guidelines, it is likely that the modeling would have predicted ozone levels of 124 ppb or below in all grid cells.

(5) The uncertainties in the biogenic emissions inventory and other modeling inputs are well within the range of the 2–5 ppb needed to reach 124 ppb in all grid cells.

(The sentence above, as included in the proposal document, contained a typographical error, as it read ''* * * the range of the 2–3 ppb * * *.'')

As discussed in the response to item (4) above, North Carolina made very conservative assumptions on model inputs for the NC application which are within the 2–5 ppb reductions needed to reach 124 ppb. Based on EPA guidance, North Carolina used the most current and only regulatory version of the biogenic model available to states at the time of its modeling analyses. The new version of the biogenic model, BEIS2, is just now being released for use by states. The impact of the new model on O_3 predictions is still being evaluated. The State of North Carolina has a commitment to perform modeling analyses in the future and will use the most current methodologies for all modeling inputs including BEIS as well as the most current model.

(6) The modeling did not account for lower VOC, NO_X and O_3 boundary conditions expected when SIP attainment control programs have been implemented in many areas through the United States.

Contrary to the assertions of the commenter, boundary conditions are relevant to modeling episodes for Charlotte. North Carolina modeled two transport episodes and one stagnation episode. As indicated above, conservative assumptions on boundary conditions were made for the July 1988 transport episode. The boundary conditions for the other two episodes, including the stagnation episode, were not reduced. As states and the Environmental Council of States (ECOS) embark on the Phase II modeling efforts, North Carolina is within the regional domain being evaluated. If regional or more local controls appear warranted based on new analysis, North Carolina will be notified and EPA is confident that the State will work with EPA (using better information as it becomes available) to make any adjustment needed to maintain the NAAQS in the Charlotte area.

Comment #6—The maintenance plan was developed without regard for the potential effects on the Southern Appalachian Mountains despite North Carolina's commitment to the Southern Appalachian Mountain Initiative (SAMI).

Response—The Charlotte-Gastonia modeling analysis was not specifically designed to evaluate the effects of the plan on the Southern Appalachian Mountains. Only the O_3 inputs in the Charlotte-Gastonia airshed were required for analysis of the redesignation of the Charlotte-Gastonia area. The meteorological episodes modeled for the redesignation request, while significant for O_3 formation in the Charlotte-Gastonia area, do not include a situation where emissions from the Charlotte-Gastonia area are transported into the mountain region, which is currently in attainment and is not adjacent to the Charlotte-Gastonia area. Additionally, approval of this maintenance plan and redesignation request does not preclude additional controls being required on the sources in the Charlotte-Gastonia area as a result of future analysis indicating that such controls are necessary to protect air quality in the mountain region. In the event such controls are found to be necessary, EPA has the authority under section 110(b)(2) to require the adoption of control measures if the State fails to do so.

Comment #7—There were several comments regarding the proposal by the State to require Phase II reformulated gasoline (RFG) in a seven county area beginning in 1999. The commenters noted that since the CAA requires Phase II RFG in some areas beginning in 2000, that the fuel may not be available in 1999. Furthermore, several commenters indicated their belief that an enhanced I/M program would be of greater benefit at a lower cost in controlling ozone.

Response—As the maintenance plan approved by EPA in this final action does not include either Phase II RFG or enhanced I/M as a measure for maintenance of the NAAQS, issues regarding the use of Phase II RFG or enhanced I/M as maintenance measures are no longer pertinent.

Comment #8—It was commented that the contingency plan should not include a list of specific options in the maintenance plan and that contingency measures should not be pre-adopted.

Response—While the commenter is correct that contingency measures do not have to be pre-adopted, a state may chose whether or not to pre-adopt any or all of the listed contingency measures. However, EPA policy does require that the maintenance plan include a list of possible contingency measures and a schedule for implementing those measures that are determined to be necessary to ensure continued maintenance of the NAAQS. EPA's policy is based on section 175A, which requires that maintenance plans ''contain such contingency provisions as the Administrator deems necessary to assure that the state will promptly correct any violation of the standard which occurs after'' redesignation. In any event, the State did not include additional pre-adopted measures in the final submittal.

Comment #9—The secondary trigger should be eliminated because it is vague and would raise questions about federal enforceability. Additionally, one commenter believes interpretation that an exceedance of the NAAQS should cause a contingency measure to be adopted is too stringent.

Response—While EPA policy and section 175A require only that a maintenance plan contain contingency measures triggered by a violation of a NAAQS, EPA has encouraged states to select triggers based on events short of a violation in order to prevent violations from occurring so that the area continues to maintain the NAAQS or to bring the area back into attainment more quickly should a violation occur after the trigger event has occurred. For example, the September 4, 1992, memorandum from John Calcagni suggests that states use indicators such as monitoring, modeling and inventory levels to identify when early action may prevent a violation.

The secondary trigger in the Charlotte-Gastonia maintenance plan is used as an alert for the State that action may be needed to ensure continued maintenance of the NAAQS. The resulting analysis may or may not

indicate additional controls are needed. This mechanism is perfectly consistent with the purpose of a maintenance plan which is to ensure continued maintenance of the NAAQS. EPA believes that the use of the secondary trigger will help North Carolina not only to bring the area back into attainment quickly but to also prevent violations from occurring.

EPA does not believe the use of an exceedance of the NAAQS as an indicator which may lead to additional controls causes an enforcement problem. Under 40 CFR 51.110, states are required to develop control strategies for the attainment and maintenance of NAAQS. These strategies must provide for both the attainment of the standards in nonattainment areas and the maintenance of those standards in attainment areas. Since NO_X and VOC are defined as precursors to O_3, a criteria pollutant for which there is a NAAQS, emission reductions of NO_X and/or VOC are federally enforceable in attainment areas provided they are part of the federally-approved SIP. As the CAA requires SIPs for areas redesignated to attainment to include measures necessary to maintain the NAAQS, emission reductions required for maintenance of the standard in the future would be federally enforceable.

Comment #10—If contingency measures are triggered in the near-term (i.e., before 2003), additional modeling should not be required unless there has been a significant change in the model inputs and assumptions.

Response—North Carolina's contingency plan states that additional analysis will be done if necessary. Therefore, such analysis is not required, but is within the State's discretion to do if there have been significant changes in model inputs and assumptions or control technology to warrant a new analysis. EPA believes the contingency plan is approvable as written as it provides adequate assurance that violations will be corrected promptly in accordance with section 175A.

Comment #11—The contingency options from which the State could choose should continue to include RFG or enhanced I/M, clean fuel fleet provisions, open burning restrictions, summer NO_X controls from Transcontinental Gas Pipe Line Corporation and 10% beyond title IV from Duke Power's Riverbend and Allen plants during the summer. In addition, NO_X and possibly VOC RACT should be available as contingency measures.

Response—The final submittal from the State includes in their list of possible contingency measures additional NO_X and VOC RACT or greater controls on sources, particularly Duke Power and Transcontinental Gas Pipe Line Corporation, Stage II vapor control, RFG, enhancements to the I/M program, clean fuel fleets and any other measures that may be appropriate and feasible. The State also indicated it intends to develop an economic incentive program that would provide incentives to sources that purchase clean alternative vehicles. Although the State could not adopt RFG rules without receiving a section 211(c)(1) waiver of preemption from EPA, EPA believes that North Carolina has identified an adequate and appropriate list of contingency measures in light of the numerous measures it has listed.

Comment #12—The time schedule provisions of section 181(b) of the CAA are equally applicable to stationary and mobile sources. If contingency measures are needed in the future, the time schedules of the CAA should not be preferentially offered to mobile sources unless stationary sources have the same option.

Response—Stationary source controls can often be implemented on a faster time frame than mobile source controls. It is generally clear what sources are subject to such rules and what is required for a source to comply. Mobile source measures are more difficult to develop and implement as there is a greater need for public education on mobile related programs. They also often take more time to implement. One of the primary considerations for choosing a contingency measure to implement is the time needed to develop, adopt and implement the measures necessary to prevent or correct a NAAQS violation. If the analysis shows that stationary sources play an important role in such a strategy, then implementation should be achieved as soon as possible.

Comment #13—The contingency plan should provide the State with the flexibility to implement all, or any subset, of the above contingency measures as a first round of controls, if needed. However, once one of the contingency measures has been chosen and activated from the above list, no additional controls would be imposed on that category of sources until the other first round contingency control options have been activated. If a second round is required, than modeling should be used to develop a new balanced and cost-effective strategy.

Response—The primary purpose of the contingency plan is to bring an area back into attainment should the area violate the NAAQS after redesignation. The choice of which measures to implement lies with the state so long as the measures from which the state is choosing are effective. The North Carolina contingency plan provides the State with adequate flexibility to enact the measures which will be most effective in returning the area to attainment.

C. Verification of Continued Attainment

Continued attainment of the O_3 NAAQS in the nonattainment area depends, in part, on the State of North Carolina's efforts toward tracking indicators of continued attainment during the maintenance period. The primary trigger of the contingency plan will be a violation of the ambient air quality standard for ozone. The trigger date will be the date that the State certifies to EPA that the data is quality assured, which will occur no later than 30 days after the recorded violation. The secondary trigger of the contingency plan will be an exceedance of the ozone standard that would indicate a violation could be imminent. This trigger will be activated within 30 days of the State finding the exceedance.

Once either the primary or the secondary trigger is activated, the State Air Quality Section will commence analysis, including updated modeling as necessary, to determine what control measures will be required to bring the area back into attainment. By May 1 of the year following the ozone season in which the primary trigger has been activated, the State will complete the analysis and adopt stationary control measures indicated by the analysis, using the emergency rule process as necessary. The time frame for adopting measures other than for stationary sources will be based on the time frames in section 181(b) of the CAA. Where only the secondary trigger has been activated, the State will complete the analysis and begin the regulatory adoption process for any measures that are needed by May 1 of the following year.

D. Contingency Plan

The level of VOC and NO_X emissions in the nonattainment area will largely determine its ability to stay in compliance with the O_3 NAAQS in the future. Despite the State's best efforts to demonstrate continued compliance with the NAAQS, the ambient air pollutant concentrations may exceed or violate the NAAQS. Therefore, the State of North Carolina has provided contingency measures with a schedule for implementation in the event of a future O_3 air quality problem. The actual measures will be determined from the analysis process described in

the Verification of Continued Attainment portion of this document. The measures analyzed will include RACT or greater level control for NO_X and VOC sources, particularly Duke Power and Transcontinental Gas Pipe Line Corporation, Stage II vapor control for gasoline dispensing facilities, RFG, enhancements to the I/M program, clean fuel fleet program, transportation control measures, and any other appropriate and feasible measures. EPA finds that the contingency plan provided in the State of North Carolina's submittal meets the requirements of section 175A(d) of the CAA.

E. Subsequent Maintenance Plan Revisions

In accordance with section 175A(b) of the CAA, the State of North Carolina has agreed to submit a revised maintenance SIP eight years after the nonattainment area is redesignated to attainment. Such revised SIP will provide for maintenance for an additional ten years. Additionally, the State has indicated that should analysis of the current pre-adopted RACT contingency measures demonstrate that they will not be the most effective in bringing the area back into attainment, they may revise these pre-adopted measures in the future. Furthermore, based on updated analysis, the State has indicated they may periodically revise the contingency plan. All such revisions will be subject to full public participation in the regulatory adoption process.

Final Action

EPA approves the State of North Carolina's request to redesignate to attainment the Charlotte-Gastonia O_3 nonattainment area and maintenance plan. As discussed above, the emission statement, RACT catch-ups, and I/M requirements have been approved. EPA also approves the 1990 baseyear inventory for the Charlotte-Gastonia nonattainment area.

EPA finds that there is good cause for this redesignation to become effective immediately upon publication because a delayed effective date is unnecessary due to the nature of a redesignation to attainment, which exempts the area from certain Clean Air Act requirements that would otherwise apply to it. The immediate effective date for this redesignation is authorized under both 5 U.S.C. section 553(d)(1), which provides that rulemaking actions may become effective less than 30 days after publication if the rule ''grants or recognizes an exemption or relieves a restriction'' and section (d)(3), which allows an effective date less than 30 days after publication ''as otherwise provided by the agency for good cause found and published with the rule.''

Under section 307(b)(1) of the Act, 42 U.S.C. 7607(b)(1), petitions for judicial review of this action must be filed in the United States Court of Appeals for the appropriate circuit by September 5, 1995. Filing a petition for reconsideration by the Administrator of this final rule does not affect the finality of this rule for purposes of judicial review nor does it extend the time within which a petition for judicial review may be filed, and shall not postpone the effectiveness of such rule or action. This action may not be challenged later in proceedings to enforce its requirements. (See section 307(b)(2) of the Act, 42 U.S.C. 7607(b)(2).)

The OMB has exempted these actions from review under Executive Order 12866.

Nothing in this action shall be construed as permitting or allowing or establishing a precedent for any future request for a revision to any state implementation plan. Each request for revision to the state implementation plan shall be considered separately in light of specific technical, economic, and environmental factors and in relation to relevant statutory and regulatory requirements.

Under the Regulatory Flexibility Act, 5 U.S.C. 600 *et seq.*, EPA must prepare a regulatory flexibility analysis assessing the impact of any proposed or final rule on small entities. 5 U.S.C. 603 and 604. Alternatively, EPA may certify that the rule will not have a significant impact on a substantial number of small entities. Small entities include small businesses, small not-for-profit enterprises, and government entities with jurisdiction over populations of less than 50,000.

Redesignation of an area to attainment under section 107(d)(3)(E) of the CAA does not impose any new requirements on small entities. Redesignation is an action that affects the status of a geographical area and does not impose any regulatory requirements on sources. The Administrator certifies that the approval of the redesignation request will not affect a substantial number of small entities.

Unfunded Mandates

Under Sections 202, 203, and 205 of the Unfunded Mandates Reform Act of 1995 (''Unfunded Mandates Act''), signed into law on March 22, 1995, EPA must undertake various actions in association with proposed or final rules that include a Federal mandate that may result in estimated costs of $100 million or more to the private sector, or to State, local, or tribal governments in the aggregate.

Through submission of this state implementation plan or plan revision, the State and any affected local or tribal governments have elected to adopt the program provided for under section 175(A) and section 187(a)(1) of the Clean Air Act. These rules may bind State, local and tribal governments to perform certain actions and also require the private sector to perform certain duties. To the extent that the rules being approved by this action will impose no new requirements; such sources are already subject to these regulations under State law. Accordingly, no additional costs to State, local, or tribal governments, or to the private sector, result from this action. EPA has also determined that this final action does not include a mandate that may result in estimated costs of $100 million or more to State, local, or tribal governments in the aggregate or to the private sector.

List of Subjects

40 CFR Part 52

Environmental protection, Air pollution control, Carbon monoxide, Hydrocarbons, Incorporation by reference, Intergovernmental relations, Nitrogen dioxide, Ozone, Reporting and recordkeeping requirements.

40 CFR Part 81

Air pollution control, National parks, Wilderness areas.

Dated: June 19, 1995.

Patrick M. Tobin,

Acting Regional Administrator.

Chapter I, title 40, *Code of Federal Regulations*, is amended as follows:

PART 52—[AMENDED]

1. The authority citation for part 52 continues to read as follows:

Authority: 42 U.S.C. 7401–7671q.

Subpart II—North Carolina

2. Section 52.1770 is amended by adding paragraph (c)(83) to read as follows:

§ 52.1770 Identification of plan.

* * * * *

(c) * * *

(83) The maintenance plan and redesignation request for the Charlotte-Gastonia area which include Mecklenburg and Gaston Counties submitted by the State of North Carolina on November 12, 1993.

(i) Incorporation by reference.

(A) The following subsections of Section 3.0, entitled Maintenance Plan,

in the Supplement To The Redesignation Demonstration and Maintenance Plan for the Charlotte/Gaston Ozone Nonattainment Area adopted by the North Carolina Environmental Management Commission on May 11, 1995: 3.1 Concept of North Carolina's Maintenance Plan; 3.2 Foundation Control Program; Table 3.2 of Subsection 3.3; and 3.4 Contingency Plan.

(ii) Other material. None.

PART 81—[AMENDED]

1. The authority citation for part 81 continues to read as follows:

Authority: 42.U.S.C. 7401–7671q.

2. In § 81.334, the ozone table is amended by removing the Charlotte-Gastonia area and its entries in the first alphabetical list and by adding in alphabetical order entries for ''Gaston County'' and ''Mecklenburg County'' to the second listing of counties to read as follows:

§ 81.334 North Carolina.

* * * * *

NORTH CAROLINA—OZONE

	Designation		Classification	
	Date [1]	Type	Date [1]	Type
Rest of State		Unclassifiable/Attainment		
* *	*	*	*	*
Gaston County	July 5, 1995.			
* *	*	*	*	*
Mecklenburg County	July 5, 1995.			
* *	*	*	*	*

[1] This date is November 15, 1990, unless otherwise noted.

* * * * *

[FR Doc. 95–16358 Filed 7–3–95; 8:45 am]

BILLING CODE 6560–50–P

40 CFR Part 52

[NC59–2–6942a; NC55–1–6497a; NC54–1–6496a; FRL–5253–3]

Designation of Areas for Air Quality Planning Purposes; State of North Carolina

AGENCY: Environmental Protection Agency (EPA).

ACTION: Final rule.

SUMMARY: This document accelerates the effective date for the promulgation of basic motor vehicle inspection and maintenance (I/M) program modifications in the Winston-Salem and Raleigh/Durham maintenance areas and the Charlotte-Gastonia ozone nonattainment area. EPA previously published a direct final rule approving the North Carolina basic I/M state implementation plan (SIP) revision effective July 17, 1995. Since no comments were received during the public comment period on that document, and the I/M program is required for the Charlotte-Gastonia redesignation, this document makes the I/M revision effective July 5, 1995.

EFFECTIVE DATE: This action will be effective July 5, 1995.

ADDRESSES: Environmental Protection Agency, Region 4 Air Programs Branch, 345 Courtland Street NE., Atlanta, Georgia 30365.

FOR FURTHER INFORMATION CONTACT: Ben Franco, Regulatory Planning and Development Section, Air Programs Branch, Air, Pesticides & Toxics Management Division, Region 4 Environmental Protection Agency, 345 Courtland Street, NE, Atlanta, Georgia 30365. The telephone number is (404) 347–3555, extension 4211.

SUPPLEMENTARY INFORMATION: On June 2, 1995, EPA published a direct final rule (see 60 FR 28726) approving a revision to the North Carolina basic I/M SIP. The document stated the effective date of the I/M rule would be July 17, 1995, if no adverse comments were received by July 3, 1995. No adverse comments were received. The I/M rule is a requirement for the Charlotte-Gastonia area and must be effective prior to the ozone redesignation of the area. If the redesignation of the Charlotte-Gastonia area is not approved prior to July 28, 1995, sanctions would be imposed for a brief period. Therefore, the acceleration of the effective date for this rule will permit the Agency to redesignate the Charlotte-Gastonia ozone nonattainment area prior to the imposition of sanctions.

The 18-month clock leading to the imposition of sanctions was started by a letter dated January 28, 1994, in which EPA found that the State of North Carolina had failed to submit a SIP for the 15% plan and correction to the basic I/M program by November 15, 1992. The State subsequently submitted a complete SIP for the corrections to the I/M program. Once the area is redesignated, the 15% plan is no longer an applicable requirement.

Final Action

The EPA published approval of the I/M SIP on June 2, 1995 (see 60 FR 28720) without prior proposal because the Agency viewed this as a noncontroversial amendment and anticipated no adverse comments. Since no comments were received, the redesignation is effective July 5, 1995.

Nothing in this action shall be construed as permitting or allowing or establishing a precedent for any future request for a revision to any SIP. Each request for revision to the SIP shall be considered separately in light of specific technical, economic, and environmental factors and in relation to relevant statutory and regulatory requirements.

List of Subjects in 40 CFR Part 52

Environmental protection, Air pollution control, Carbon monoxide, Incorporation by reference, Intergovernmental relations, Reporting and recordkeeping, Nitrogen oxides, Ozone.

Dated: June 27, 1995.

Patrick M. Tobin,

Acting Regional Administrator.

[FR Doc. 95–16469 Filed 7–3–95; 8:45 am]

BILLING CODE 6560–50–P

40 CFR Part 180

[OPP–300392; FRL–4963–4]

RIN 2070–AB78

6-Benzyladenine; Removal of Tolerance and Establishment of Tolerance Exemption

AGENCY: Environmental Protection Agency (EPA).

ACTION: Final rule.

SUMMARY: This document removes a tolerance for combined residues of the plant growth regulator 6-benzyladenine and establishes an exemption from the requirement of a tolerance for the chemical in or on the raw agricultural commodity apples. This document is issued in response to the Reregistration Eligibility Decision (RED) regarding this chemical and a petition from Abbott Laboratories.

EFFECTIVE DATE: This regulation becomes effective July 5, 1995.

ADDRESSES: Written objections and hearing requests, identified by the document control number, [OPP-300392], may be submitted to: Hearing Clerk (1900), Environmental Protection Agency, Rm. M3708, 401 M St., SW., Washington, DC 20460. Fees accompanying objections and hearing requests shall be labeled ''Tolerance Petition Fees'' and forwarded to: EPA Headquarters Accounting Operations Branch, OPP (Tolerance Fees), P.O. Box 360277M, Pittsburgh, PA 15251. A copy of any objections and hearing requests filed with the Hearing Clerk should be identified by the document control number and submitted to: Public Response and Program Resources Branch, Field Operations Division (7506C), Office of Pesticide Programs, Environmental Protection Agency, 401 M St., SW., Washington, DC 20460. In person, bring copy of objections and hearing requests to: Rm. 1132, CM #2, 1921 Jefferson Davis Hwy., Arlington, VA 22202.

A copy of objections and hearing requests filed with the Hearing Clerk may also be submitted electronically by sending electronic mail (e-mail) to: opp-docket@epamail.epa.gov. Copies of objections and hearing requests must be submitted as an ASCII file avoiding the use of special characters and any form of encryption. Copies of objections and hearing requests will also be accepted on disks in WordPerfect in 5.1 file format or ASCII file format. All copies of objections and hearing requests in electronic form must be identified by the docket number [OPP-300392]. No Confidential Business Information (CBI) should be submitted through e-mail. Electronic copies of objections and hearing requests on this rule may be filed online at many Federal Depository Libraries. Additional information on electronic submissions can be found below in this document.

FOR FURTHER INFORMATION CONTACT: By mail: Philip Poli, Special Review and Reregistration Division (7508W), Environmental Protection Agency, 401 M St., SW., Washington, DC 20460. Office location and telephone number: Special Review Branch, Crystal Station #1, 3rd Floor, 2800 Jefferson Davis Hwy., Arlington, VA, (703)-308-8038; e-mail: poli.philip@epamail.epa.gov.

SUPPLEMENTARY INFORMATION: 6-Benzyladenine was first registered in the United States in 1979. It is a plant growth regulator used on certain fruit, white pine trees, calla lily tubers, and spinach grown for seed. In January 1990, the Agency classified 6-benzyladenine as a biochemical pesticide because it resembles natural plant regulators and it displays a nontoxic mode of action. The Reregistration Eligibility Decision (RED) document was issued for 6-benzyladenine in June 1994. Based on results of acute studies that indicate low toxicity, chronic studies were not required. In addition, because the use rate is low and application precedes harvest by approximately 4 months, the potential for dietary exposure is considered to be negligible (U.S. Environmental Protection Agency (USEPA). Reregistration Eligibility Decision (RED) document, N6-Benzyladenine, List B, Case 2040. June 1994.) The RED document proposed that the current apple tolerance be revoked and in its place an exemption from the requirement of a tolerance be established. In response to the RED, the pesticide registrant submitted a petition requesting a tolerance exemption on April 15, 1994.

EPA issued a notice, published in the **Federal Register** of September 28, 1994 (59 FR 49397), which announced that Abbott Laboratories had submitted a pesticide petition (PP) 4F4353 to EPA requesting that the Administrator, pursuant to section 408(d) of the Federal Food, Drug and Cosmetic Act (FFDCA), 21 U.S.C. 346a(d), amend 40 CFR part 180 to establish an exemption from the requirement of a tolerance for residues of 6-benzyladenine, *N*-(phenyl)-1*H*-purine-6-amine. No comments or requests for referral to an advisory committee were received in response to the notice. The September 28, 1994 **Federal Register** notice serves as the Agency's proposal to amend 40 CFR part 180 by removing the existing tolerance for apples and establishing a tolerance exemption for this chemical.

Based on the data and information considered, the Agency concludes that the tolerance exemption will protect the public health. Therefore, the tolerance exemption is established as set forth below.

Any person adversely affected by this regulation may, within 30 days after publication of this document in the **Federal Register,** file written objections and/or request a hearing with the Hearing Clerk, at the address given above (40 CFR 178.20). A copy of the objections and/or hearing requests filed with the Hearing Clerk should be submitted to the OPP docket for this rulemaking. The objections submitted must specify the provisions of the regulation deemed objectionable and the grounds for the objections (40 CFR 178.25). Each objection must be accompanied by the fee prescribed by 40 CFR 180.33(i). If a hearing is requested, the objections must include a statement of the factual issue(s) on which a hearing is requested, the requestor's contentions on such issues, and a summary of any evidence relied upon by the objector (40 CFR 178.27). A request for a hearing will be granted if the Administrator determines that the material submitted shows the following: There is a genuine and substantial issue of fact; there is a reasonable possibility that available evidence identified by the requestor would, if established, resolve one or more of such issues in favor of the requestor, taking into account uncontested claims or facts to the contrary; and resolution of the factual issue(s) in the manner sought by the requestor would be adequate to justify the action requested (40 CFR 178.32).

A record has been established for this rulemaking under docket number [OPP-300392] (including any objections and hearing requests submitted electronically as described below). A public version of this record, including printed, paper versions of electronic comments, which does not include any information claimed as CBI, is available for inspection from 8 a.m. to 4:30 p.m., Monday through Friday, excluding legal holidays. The public record is located in Room 1132 of the Public Response and Program Resources Branch, Field Operations Division (7506C), Office of Pesticide Programs, Environmental Protection Agency, Crystal Mall #2, 1921 Jefferson Davis Highway, Arlington, VA.

Written objections and hearing requests, identified by the document control number [OPP-300392], may be submitted to the Hearing Clerk (1900),

Environmental Protection Agency, Rm. 3708, 401 M St., SW., Washington, DC 20460.

A copy of electronic objections and hearing requests filed with the Hearing Clerk can be sent directly to EPA at:

opp-Docket@epamail.epa.gov

A copy of electronic objections and hearing requests filed with the Hearing Clerk must be submitted as an ASCII file avoiding the use of special characters and any form of encryption.

The official record for this rulemaking, as well as the public version, as described above will be kept in paper form. Accordingly, EPA will transfer any objections and hearing requests received electronically into printed, paper form as they are received and will place the paper copies in the official rulemaking record which will also include all objections and hearing requests submitted directly in writing. The official rulemaking record is the paper record maintained at the address in ''ADDRESSES'' at the beginning of this document.

Under Executive Order 12866 (58 FR 51735, Oct. 4, 1993), the Agency must determine whether the regulatory action is ''significant'' and therefore subject to review by the Office of Management and Budget (OMB) and the requirements of the Executive Order. Under section 3(f), the order defines a ''significant regulatory action'' as an action that is likely to result in a rule (1) having an annual effect on the economy of $100 million or more, or adversely and materially affecting a sector of the economy, productivity, competition, jobs, the environment, public health or safety, or State, local, or tribal governments or communities (also referred to as ''economically significant''); (2) creating serious inconsistency or otherwise interfering with an action taken or planned by another agency; (3) materially altering the budgetary impacts of entitlement, grants, user fees, or loan programs or the rights and obligations of recipients thereof; or (4) raising novel legal or policy issues arising out of legal mandates, the President's priorities, or the principles set forth in this Executive Order.

Pursuant to the terms of the Executive Order, EPA has determined that this rule is not ''significant'' and is therefore not subject to OMB review.

Pursuant to the requirements of the Regulatory Flexibility Act (Pub. L. 96-354, 94 Stat. 1164, 5 U.S.C. 601-612), the Administrator has determined that regulations establishing new tolerances or raising tolerance levels or establishing exemptions from tolerance requirements do not have a significant economic impact on a substantial number of small entities. A certification statement to this effect was published in the **Federal Register** of May 4, 1981 (46 FR 24950).

This final rule does not contain information collection requirements subject to review by OMB under the Paperwork Reduction Act of 1980, 44 U.S.C. 3501 et seq.

List of Subjects in 40 CFR Part 180

Environmental protection, Administrative practice and procedure, Agricultural commodities, Pesticides and pests, Reporting and recordkeeping requirements.

Dated: June 27, 1995.

Lois A. Rossi,

Director, Special Review and Reregistration Division, Office of Pesticide Programs.

Therefore, 40 CFR part 180 is amended as follows:

PART 180—[AMENDED]

1. The authority citation for part 180 continues to read as follows:

Authority: 21 U.S.C. 346a and 371.

§ 180.376 [Removed]

2. By removing § 180.376 *6-Benzyladenine; tolerances for residues.*

3. In subpart D, by adding new § 180.1150, to read as follows:

§ 180.1150 6-Benzyladenine; exemption from the requirement of a tolerance.

The plant growth regulator 6-benzyladenine is exempt from the requirement of a tolerance when used as a fruit-thinning agent at an application rate not to exceed 30 grams of active ingredient per acre (30 g ai/A) in or on apples.

[FR Doc. 95–16431 Filed 7–3–95; 8:45 am]

BILLING CODE 6560–50–F

---

40 CFR Part 180

[OPP–300385A; FRL–4963–8]

RIN 2070–AB78

Potassium Oleate, Oxytetracycline, and S-Ethyl Diisobutylthiocarbamate; Tolerance Actions

AGENCY: Environmental Protection Agency (EPA).

ACTION: Final rule.

SUMMARY: EPA on its own inititative is revising 40 CFR 180.232, 180.337, and 180.1068 to change some chemical expressions, increase certain tolerances, revise certain commodity definitions, and delete certain terms. For each of the pesticides subject to this rule, EPA has completed the reregistration process and issued a Reregistration Eligibility Document. These actions are taken as a result of EPA's reregistration process involving these chemicals.

EFFECTIVE DATE: This regulation becomes effective July 5, 1995.

ADDRESSES: Written objections and hearing requests, identified by the document control number, [OPP-300385A], may be submitted to: Hearing Clerk (1900), Environmental Protection Agency, Rm. M3708, 401 M St., SW., Washington, DC 20460. Fees accompanying objections shall be labeled ''Tolerance Petition Fees'' and forwarded to: EPA Headquarters Accounting Operations Branch, OPP (Tolerance Fees), P.O. Box 360277M, Pittsburgh, PA 15251. A copy of any objections and hearing requests filed with the Hearing Clerk should be identified by the document control number and submitted to: Public Response and Program Resources Branch, Field Operations Division (7506C), Office of Pesticide Programs, Environmental Protection Agency, 401 M St., SW., Washington, DC 20460. In person, bring copy of objections and hearing requests to Rm. 1132, CM #2, 1921 Jefferson Davis Hwy., Arlington, VA 22202.

A copy of objections and hearing requests filed with the Hearing Clerk may also be submitted electronically by sending electronic mail (e-mail) to: opp-docket@epamail.epa.gov. Copies of objections and hearing requests must be submitted as an ASCII file avoiding the use of special characters and any form of encryption. Copies of objections and hearing requests will also be accepted on disks in WordPerfect in 5.1 file format or ASCII file format. All copies of objections and hearing requests in electronic form must be identified by the docket number [OPP-300385A]. No Confidential Business Information (CBI) should be submitted through e-mail. Electronic copies of objections and hearing requests on this rule may be filed online at many Federal Depository Libraries. Additional information on electronic submissions can be found below in this document.

FOR FURTHER INFORMATION CONTACT: By mail: Ben Chambliss, Special Review and Reregistration Division (7508W), Environmental Protection Agency, 401 M St., SW., Washington, DC 20460. Office location and telephone number: Special Review Branch, Crystal Station #1, 3rd Floor, 2800 Crystal Drive,

Arlington, VA 22202, (703)-308-8174; e-mail: chambliss.ben@epamail.epa.gov.

SUPPLEMENTARY INFORMATION: In the **Federal Register** of April 19, 1995 (60 FR 19556), EPA issued a propose rule in which it stated that for each of the pesticides subject to the actions listed in the proposed rule, EPA had completed the reregistration process and issued a Reregistration Eligibility Document (RED). In the reregistration process, all continued registrations were reviewed for adequacy and, when needed, supplemented with new scientific studies. Based on the RED tolerance assessments for the pesticide chemicals subject to this rule, EPA is taking the following actions: deleting the term ''potassium oleate'' from the tolerance exemption for C_{12}–C_{18} fatty acid potassium salts (40 CFR 180.1068); increasing a tolerance for oxytetracycline on peaches (40 CFR 180.337); and changing the chemical name of ''*S*-ethyl diisobutylthiocarbamate'' (40 CFR 180.232) to the common name ''butylate'', deleting certain terms from the section, and changing commodity definitions in the section.

There were no comments or requests for referral to an advisory committee received in response to the proposed rule.

The data submitted with the proposal and other relevant material have been evaluated and discussed in the proposed rule. Based on the data and information considered, the Agency concludes that the amendments will protect the public health. Therefore, the amendments are established as set forth below.

Any person adversely affected by this regulation may, within 30 days after publication of this document in the **Federal Register**, file written objections to the regulation and may also request a hearing on those objections. Objections and hearing requests must be filed with the Hearing Clerk, at the address given above (40 CFR 178.20). A copy of the objections and/or hearing requests filed with the Hearing Clerk should be submitted to the OPP docket for this rulemaking. The objections submitted must specify the provisions of the regulation deemed objectionable and the grounds for the objections (40 CFR 178.25). Each objection must be accompanied by the fee prescribed by 40 CFR 180.33(i). If a hearing is requested, the objections must include a statement of the factual issue(s) on which a hearing is requested, the requestor's contentions on such issues, and a summary of any evidence relied upon by the objector (40 CFR 178.27). A request for a hearing will be granted if the Administrator determines that the material submitted shows the following: There is genuine and substantial issue of fact; there is a reasonable possibility that available evidence identified by the requestor would, if established, resolve one or more of such issues in favor of the requestor, taking into account uncontested claims or facts to the contrary; and resolution of the factual issue(s) in the manner sought by the requestor would be adequate to justify the action requested (40 CFR 178.32).

A record has been established for this rulemaking under docket number [OPP-300385A] (including objections and hearing requests submitted electronically as described below). A public version of this record, including printed, paper versions of electronic comments, which does not include any information claimed as CBI, is available for inspection from 8 a.m. to 4:30 p.m., Monday through Friday, excluding legal holidays. The public record is located in Room 1132 of the Public Response and Program Resources Branch, Field Operations Division (7506C), Office of Pesticide Programs, Environmental Protection Agency, Crystal Mall #2, 1921 Jefferson Davis Highway, Arlington, VA.

Written objections and hearing requests, identified by the document control number [OPP-300385A], may be submitted to the Hearing Clerk (1900), Environmental Protection Agency, Rm. 3708, 401 M St., SW., Washington, DC 20460.

A copy of electronic objections and hearing requests filed with the Hearing Clerk can be sent directly to EPA at:

opp-Docket@epamail.epa.gov

A copy of electronic objections and hearing requests filed with the Hearing Clerk must be submitted as an ASCII file avoiding the use of special characters and any form of encryption.

The official record for this rulemaking, as well as the public version, as described above will be kept in paper form. Accordingly, EPA will transfer any objections and hearing requests received electronically into printed, paper form as they are received and will place the paper copies in the official rulemaking record which will also include all objections and hearing requests submitted directly in writing. The official rulemaking record is the paper record maintained at the address in ''ADDRESSES'' at the beginning of this document.

Under Executive Order 12866 (58 FR 51735, October 4, 1993), the Agency must determine whether the regulatory action is ''significant'' and therefore subject to all the requirements of the Executive Order (i.e., Regulatory Impact Analysis, review by the Office of Management and Budget (OMB)). Under section 3(f), the order defines ''significant'' as those actions likely to lead to a rule (1) having an annual effect on the economy of $100 million or more, or adversely and materially affecting a sector of the economy, productivity, competition, jobs, the environment, public health or safety, or State, local or tribal governments or communities (also known as ''economically significant''); (2) creating serious inconsistency or otherwise interfering with an action taken or planned by another agency; (3) materially altering the budgetary impacts of entitlement, grants, user fees, or loan programs; or (4) raising novel legal or policy issues arising out of legal mandates, the President's priorities, or the principles set forth in this Executive Order.

Pursuant to the terms of this Executive Order, EPA has determined that this rule is not ''significant'' and is therefore not subject to OMB review.

Pursuant to the requirements of the Regulatory Flexibility Act (Pub. L. 96-354, 94 Stat. 1164, 5 U.S.C. 601-612), the Administrator has determined that regulations establishing new tolerances or raising tolerance levels or establishing exemptions from tolerance requirements do not have a significant economic impact on a substantial number of small entities. A certification statement to this effect was published in the **Federal Register** of May 4, 1981 (46 FR 24950).

List of Subjects in 40 CFR Part 180

Environmental protection, Administrative practice and procedure, Agricultural commodities, Pesticides and pests, Reporting and recordkeeping requirements.

Dated: June 27, 1995.

Lois A. Rossi,

Director, Special Review and Reregistration Division, Office of Pesticide Programs.

Therefore, 40 CFR part 180 is amended as follows:

PART 180—[AMENDED]

1. The authority citation for part 180 continues to read as follows:

Authority: 21 U.S.C. 346a and 371.

2. Section 180.232 is revised to read as follows:

§ 180.232 Butylate; tolerances for residues.

Tolerances are established for the herbicide butylate in or on the raw agricultural commodities corn, field, grain; corn, pop, grain; corn, sweet

(kernels, plus cob with husk removed); corn, field, fodder; corn, field, forage; corn, pop, forage; and corn, sweet, forage at 0.1 part per million.

3. Section 180.337 is revised to read as follows:

§ 180.337 Oxytetracycline; tolerance for residues.

Tolerances are established for residues of the pesticide oxytetracycline in or on the following raw agricultural commodities:

Commodity	Parts per million
Peaches	0.35
Pears	0.35

4. Section 180.1068 is revised to read as follows:

§ 180.1068 C_{12}–C_{18} fatty acid potassium salts; exemption from the requirement of a tolerance.

C_{12}-C_{18} fatty acids (saturated and unsaturated) potassium salts are exempted from the requirement of a tolerance for residues in or on all raw agricultural commodities when used in accordance with good agricultural practice.

[FR Doc. 95–16430 Filed 7–3–95; 8:45 am]

BILLING CODE 6560–50–F

40 CFR Part 180

[PP 1F4025/R2148; FRL–4963–3]

RIN 2070–AB78

Pesticide Tolerance for O-[2-(1,1-Dimethylethyl)-5-Pyrimidinyl] O-Ethyl-O-(1-Methylethyl) Phosphorothioate

AGENCY: Environmental Protection Agency (EPA).

ACTION: Final rule.

SUMMARY: This rule establishes a time-limited tolerance for residues of the insecticide *O*-[2-(1,1-dimethylethyl)-5-pyrimidinyl] *O*-ethyl-*O*-(1-methylethyl) phosphorothioate in or on the raw agricultural commodities, corn, sweet (K+CWHR); corn, grain, field, and pop; corn, forage and fodder, field, pop, and sweet at 0.01 part per million (ppm). The Agricultural Division of Miles, Inc., requested in a petition submitted pursuant to the Federal Food, Drug and Cosmetic Act (FFDCA) this regulation to establish a maximum permissible level for residues of the insecticide.

EFFECTIVE DATE: This regulation becomes effective July 5, 1995.

ADDRESSES: Written objections and hearing requests, identified by the document control number, [PP 1F4025/R2148], may be submitted to: Hearing Clerk (1900), Environmental Protection Agency, Rm. M3708, 401 M St., SW., Washington, DC 20460. Fees accompanying objections shall be labeled ''Tolerance Petition Fees'' and forwarded to: EPA Headquarters Accounting Operations Branch, OPP (Tolerance Fees), P.O. Box 360277M, Pittsburgh, PA 15251. A copy of any objections and hearing requests filed with the Hearing Clerk should be identified by the document control number and submitted to: Public Response and Program Resources Branch, Field Operations Division (7506C), Office of Pesticide Programs, Environmental Protection Agency, 401 M St., SW., Washington, DC 20460. In person, bring copy of objections and hearing requests to Rm. 1132, CM #2, 1921 Jefferson Davis Hwy., Arlington, VA 22202.

Comments and data may also be submitted electronically by sending electronic mail (e-mail) to: opp-docket@epamail.epa.gov. Electronic comments must be submitted as an ASCII file avoiding the use of special characters and any form of encryption. Comments and data will also be accepted on disks in WordPerfect in 5.1 file format or ASCII file format. All comments and data in electronic form must be identified by the docket number [1F4025/R2148]. No Confidential Business Information (CBI) should be submitted through e-mail. Electronic comments on this proposed rule may be filed online at many Federal Depository Libraries. Additional information on electronic submissions can be found below in this document.

FOR FURTHER INFORMATION CONTACT: By mail: Robert A. Forrest, Product Manager (PM) 14, Registration Division (7505C), Office of Pesticide Programs, Environmental Protection Agency, 401 M St., SW., Washington, DC 20460. Office location and telephone number: Rm. 219, CM #2, 1921 Jefferson Davis Hwy., Arlington, VA 22202, (703)-305-6600; e-mail: forrest.robert@epamail.epa.gov.

SUPPLEMENTARY INFORMATION: EPA issued a notice, published in the **Federal Register** of April 5, 1995 (60 FR 17355), which announced that Miles, Inc., Agriculture Division, 8400 Hawthorn Road, P.O. Box 4913, Kansas City, MO 64120, had submitted a pesticide petition, PP 1F4025, to EPA requesting that the Administrator, pursuant to section 408(d) of the Federal Food, Drug, and Cosmetic Act (FFDCA), 21 U.S.C. 346a(d), establish a tolerance for residues of the insecticide ''phostebupirim'' (*O*-[2-(1,1-dimethylethyl)-5-pyrimidinyl] *O*-ethyl-*O*-(1-methylethyl) phosphorothioate) in or on the raw agricultural commodities corn, fresh; corn, grain, field and pop; and corn, forage and fodder, field, pop, and sweet at 0.01 part per million (ppm). (Because the name ''phostebupirim'' was not accepted as the common name, no further reference to this name will be made.) For consistency, the raw agricultural commodity, corn, fresh is expressed as corn, sweet (K+CWHR).

There were no comments received in response to the notice. The scientific data submitted in the petition and other relevant material have been evaluated. The toxicological data considered in support of the tolerance include:

1. Several acute toxicological studies placing the technical grade of the insecticide in toxicity category I.

2. A 3-week subacute rabbit dermal study with a no-observed-effect level (NOEL) of 0.3 milligram/kilogram/day (mg/kg/day) for cholinesterase inhibition effects. Levels tested were 0.3, 1.0, and 3.0 mg/kg/day.

3. A subchronic (86 days) rat-feeding study with a NOEL for cholinesterase effects of 4.0 ppm and a systemic NOEL of 12.0 ppm. Levels tested were 2.0, 4.0, 12.0, and 36.0 ppm. (0.1, 0.2, 0.6, and 1.8 mg/kg/day, respectively).

4. An acute delayed neurotoxicity study in hens in which a dosage of 10 mg/kg was administered by gavage with no delayed neurotoxicity effects observed under conditions of the study.

5. A 1-year dog-feeding study with a NOEL of 0.02 mg/kg/day. Plasma, red blood cell, and brain cholinesterase inhibition effects were observed at the 5.0 ppm (0.125 mg/kg) dose level. No systemic effects were observed under the conditions of the study. Levels tested were 0.2, 0.7, and 5.0 ppm. (0.005, 0.018, and 0.125 mg/kg/day, respectively).

6. The following three studies fulfill the rat chronic/oncogenicity study requirement.

a. A 2-year rat-feeding carcinogenicity study with a NOEL of 1.0 ppm for cholinesterase inhibition and 5.0 ppm for systemic effects. The study was negative for carcinogenic effects under the conditions of the study. Systemic effects observed at the 25-ppm dose level consisted of a decrease in body weight gain for first 6 months (males); soft stools; and poor general conditions, salivation, and tremors (females). Levels tested were 1.0 ppm, 5.0 ppm, and 25.0 ppm. (0.05, 0.25, and 1.25 mg/kg/day, respectively).

b. A 6-month cholinesterase study in rats with a NOEL of 0.3 ppm (0.02 mg/kg) for erythrocyte cholinesterase inhibition. There were no apparent systemic effects observed under conditions of the study. The levels tested were 0.3, 1.0, and 3.0 ppm. (0.015, 0.05, and 0.15 mg/kg/day, respectively).

c. A 12-month sacrifice study in rats administered 0 or 25 ppm (1.25 mg/kg/day) in which a decrease in body weight gain, an increase in food consumption, and an inhibition of brain cholinesterase activity were observed.

7. The following two studies fulfill the mouse chronic/oncogenicity study.

a. A 2-year mouse carcinogenicity study which was negative for carcinogenic effects under the conditions of the study. The cholinesterase NOEL was 1.0 ppm (0.52 mg/kg/day for males and 0.58 mg/kg/day for females) for erythrocyte, plasma and brain. Levels tested were 1.0 ppm, 9.0 ppm, and 80.0 ppm.

b. A 12-month mouse cholinesterase study with a NOEL for cholinesterase inhibition of 0.3 ppm in males (0.13 mg/kg/day) and less than 0.3 ppm in females (0.16 mg/kg/day). The lowest-observed-effect level (LOEL) in males was 1.0 ppm (0.43 mg/kg/day) and in females, 0.3 ppm (0.16 mg/kg/day). The NOEL for systemic effects was 3.0 ppm (1.23 and 1.63 mg/kg/day in males and females, respectively). Levels tested were 0.3, 1.0, and 3.0 ppm.

8. A two-generation reproduction study in rats with a developmental NOEL of 5.0 ppm (approximately 0.25 mg/kg). A decrease in fertility indices and an increase in number of dead pups were observed at the 25.0-ppm dose level. There were no teratogenic effects observed under conditions of the study. The maternal NOEL for cholinesterase and systemic effects was 5.0 ppm. Tremors, decreased body weight gain, and cholinesterase inhibition were observed at the 25.0-dose level. Levels tested were 1.0 ppm, 5.0 ppm, and 25.0 ppm.

9. A rat developmental study with no developmental effects observed under conditions of the study. The maternal NOEL was 0.50 mg/kg. At the 0.75-mg/kg dose level, mortality and a decrease in body weight gain as well as food consumption during days 11 to 16 of the gestation; and inhibition of plasma, erythrocyte, and brain cholinesterase was observed. Levels tested were 0.25, 0.50, and 0.75 mg/kg.

10. A rabbit developmental study with an NOEL of 0.1 mg/kg for developmental effects (fetotoxicity). At the 0.3 mg/kg-dose, there was a decreased number of live fetuses/litter, a higher number of resorptions per group, and a greater number of litters with at least one resorption. Erythrocyte cholinesterase inhibition was also observed at the 0.3-mg/kg dose level. The test material was administered by gavage at doses of 0.03, 0.1, and 0.3 mg/kg.

11. Several mutagenicity studies in which the insecticide showed no evidence of mutagenic effects. These studies included gene mutation in cultured Chinese Hamster ovary cells (CHO/HGPRT); salmonella plate assays; *in vivo* micronucleus assay in mice; sister chromatid exchange assay in Chinese hamster ovary cells; unscheduled DNA synthesis assay in primary rat hepatocytes; and mitotic recombination.

12. A rat metabolism study demonstrated that the insecticide was readily absorbed, distributed, metabolized, and excreted and that bioaccumulation and retention of the compound and/or its metabolites are low in rats. *In vivo* and *in vitro* metabolism studies indicate that the insecticide is metabolized by mixed function oxidases to *O*-[2-(1,1-dimethylethyl)-5-pyrimidinyl] *O*-ethyl-*O*-(1-methylethyl) phosphorothioate (OMAT), an oxygen analog, which is rapidly hydrolyzed to 2-(1,1-dimethylethyl)-5-hydroxypyrimidine (TPHP) and excreted as the glucuronide conjugate of TBHP, a major metabolite representing 60 to 74 percent of the administered radioactivity.

The reference dose (RfD) is established at 0.0002 mg/kg/day based on a NOEL of 0.02 mg/kg/day from the 2-year dog feeding study and an uncertainty factor of 100. The Theoretical Maximum Residue Contribution (TMRC) from the current action is estimated at .000006 mg/kg of body weight/day and utilizes 2.887 percent of the RfD for the U.S. population. There are no other tolerances established for this chemical.

The TMRC for children, aged 1 to 6 years old, and nonnursing infants (the subgroups most highly exposed) utilizes 7.0 percent of the RfD for each subgroup.

An acute dietary exposure analysis utilizing the NOEL of 0.3 mg/kg/day from the rabbit developmental study as the toxicological endpoint was conducted. The subpopulation of particular concern (females 13+ years) has a Margin of Exposure (MOE) of 1,667 and therefore has a negligible acute risk for developmental toxicity from the establishment of these tolerances. The acute dietary analysis estimates the distribution of single-day exposures for the overall population and certain subgroups, and the MOE, calculated as the ratio of the NOEL to the exposure, is a measure of how close the high-end exposure comes to the NOEL.

The nature of the residue in plants and animals is adequately understood. An adequate analytical method, gas-liquid chromatography, is available for enforcement purposes.

The enforcement methodology has been submitted to the Food and Drug Administration for publication in the Pesticide Analytical Manual, Vol. II (PAM). Because of the long lead time for publication of the method in PAM II, the analytical methodology is being made available in the interim to anyone interested in pesticide enforcement when requested from: Calvin Furlow, Public Response and Program Resources Branch, Field Operations Division (7506C), Office of Pesticide Programs, Environmental Protection Agency, 401, M St., SW., Washington, DC 20460. Office location and telephone number: Rm. 1132, CM #2, 1921 Jefferson Davis Highway, Arlington, VA 22202, (703)-305-5232.

There is no reasonable expectation that secondary residues will occur in milk, eggs, or the meat, fat and meat byproducts (mbyp) of livestock or poultry as a result of this action.

Desirable data lacking include acute and subchronic rat neurotoxicity studies which are recent data requirements for cholinesterase-inhibiting pesticides. The gross cholinesterase inhibitory properties of the insecticide have been characterized in the available studies; however, additional characterization of the neurotoxic/neuropathological potential of the insecticide in mammals (rodents) is necessary. These studies have since been received by the Agency and are currently in review.

Because of the lack of the mammalian neurotoxicity studies and the need to be consistent with the conditional registration being issued in conjunction with this regulation, the Agency is limiting the period of time that the regulation is to be in effect. Because the conditional registration being issued is for a combination product consisting of two active ingredients with the insecticide, cyfluthrin, as the second active ingredient, a regulation establishing time-limited tolerances for the use of cyfluthrin on corn is also being issued concurrently with this regulation. Upon evaluation of the rat neurotoxicity studies and receipt and evaluation of the other data/information required as conditions of the registration, the Agency will reassess the tolerances and registration and, if appropriate, will issue permanent

tolerances and an unconditional registration for the use of these insecticides on corn.

There are currently no actions pending against the registration of this chemical.

Elsewhere in this issue of the **Federal Register**, the Agency is concurrently issuing a notice of conditional registration for the use of this new chemical on corn and a rule establishing a time-limited tolerance for residues of the insecticide, cyfluthrin, in/on corn commodities.

Based on the information and data considered, the Agency has determined that the tolerance established by amending 40 CFR part 180 will protect the public health. Therefore, the tolerance is established as set forth below.

Any person adversely affected by this regulation may, within 30 days after publication of this document in the **Federal Register**, file written objections to the regulation and may also request a hearing on those objections. Objections and hearing requests must be filed with the Hearing Clerk, at the address given above (40 CFR 178.20). A copy of the objections and/or hearing requests filed with the Hearing Clerk should be submitted to the OPP docket for this rulemaking. The objections submitted must specify the provisions of the regulation deemed objectionable and the grounds for the objections (40 CFR 178.25). Each objection must be accompanied by the fee prescribed by 40 CFR 180.33(i). If a hearing is requested, the objections must include a statement of the factual issue(s) on which a hearing is requested, the requestor's contentions on such issues, and a summary of any evidence relied upon by the objector (40 CFR 178.27). A request for a hearing will be granted if the Administrator determines that the material submitted shows the following: There is genuine and substantial issue of fact; there is a reasonable possibility that available evidence identified by the requestor would, if established, resolve one or more of such issues in favor of the requestor, taking into account uncontested claims or facts to the contrary; and resolution of the factual issue(s) in the manner sought by the requestor would be adequate to justify the action requested (40 CFR 178.32).

A record has been established for this rulemaking under docket number [PP 1F4025/R2148] (including objections and hearing requests submitted electronically as described below). A public version of this record, including printed, paper versions of electronic comments, which does not include any information claimed as CBI, is available for inspection from 8 a.m. to 4:30 p.m., Monday through Friday, excluding legal holidays. The public record is located in Room 1132 of the Public Response and Program Resources Branch, Field Operations Division (7506C), Office of Pesticide Programs, Environmental Protection Agency, Crystal Mall #2, 1921 Jefferson Davis Highway, Arlington, VA.

Written objections and hearing requests, identified by the document control number [PP 1F4025/R2148], may be submitted to the Hearing Clerk (1900), Environmental Protection Agency, Rm. 3708, 401 M St., SW., Washington, DC 20460.

A copy of electronic objections and hearing requests filed with the Hearing Clerk can be sent directly to EPA at:

opp-Docket@epamail.epa.gov

A copy of electronic objections and hearing requests filed with the Hearing Clerk must be submitted as an ASCII file avoiding the use of special characters and any form of encryption.

The official record for this rulemaking, as well as the public version, as described above will be kept in paper form. Accordingly, EPA will transfer any objections and hearing requests received electronically into printed, paper form as they are received and will place the paper copies in the official rulemaking record which will also include all objections and hearing requests submitted directly in writing. The official rulemaking record is the paper record maintained at the address in ''ADDRESSES'' at the beginning of this document.

Under Executive Order 12866 (58 FR 51735, October 4, 1993), the Agency must determine whether the regulatory action is ''significant'' and therefore subject to all the requirements of the Executive Order (i.e., Regulatory Impact Analysis, review by the Office of Management and Budget (OMB)). Under section 3(f), the order defines ''significant'' as those actions likely to lead to a rule (1) having an annual effect on the economy of $100 million or more, or adversely and materially affecting a sector of the economy, productivity, competition, jobs, the environment, public health or safety, or State, local or tribal governments or communities (also known as ''economically significant''); (2) creating serious inconsistency or otherwise interfering with an action taken or planned by another agency; (3) materially altering the budgetary impacts of entitlement, grants, user fees, or loan programs; or (4) raising novel legal or policy issues arising out of legal mandates, the President's priorities, or the principles set forth in this Executive Order.

Pursuant to the terms of this Executive Order, EPA has determined that this rule is not ''significant'' and is therefore not subject to OMB review.

Pursuant to the requirements of the Regulatory Flexibility Act (Pub. L. 96-354, 94 Stat. 1164, 5 U.S.C. 601-612), the Administrator has determined that regulations establishing new tolerances or raising tolerance levels or establishing exemptions from tolerance requirements do not have a significant economic impact on a substantial number of small entities. A certification statement to this effect was published in the **Federal Register** of May 4, 1981 (46 FR 24950).

List of Subjects in 40 CFR Part 180

Environmental protection, Administrative practice and procedure, Agricultural commodities, Pesticides and pests, Reporting and recordkeeping requirements.

Dated: June 23, 1995.

Daniel M. Barolo,

Director, Office of Pesticide Programs.

Therefore, 40 CFR part 180 is amended as follows:

PART 180—[AMENDED]

1. The authority citation for part 180 continues to read as follows:

Authority: 21 U.S.C. 346a and 371.

2. By adding new § 180.483, to read as follows:

§ 180.483 O-[2-(1,1-Dimethylethyl)-5-pyrimidinyl] O-ethyl-O-(1-methylethyl) phosphorothioate; tolerances for residues.

Time-limited tolerances are established for residues of the insecticide *O*-[2-(1,1-dimethylethyl)-5-pyrimidinyl] *O*-ethyl-*O*-(1-methylethyl) phosphorothioate in or on the following raw agricultural commodities:

Commodity	Parts per million	Expiration date
Corn, forage and fodder, field, pop, and sweet	0.01	July 6, 1999.
Corn, grain, field and pop	0.01	Do.

Commodity	Parts per million	Expiration date
Corn, sweet (K+CWHR)	0.01	Do.

[FR Doc. 95–16428 Filed 7–3–95; 8:45 am]

BILLING CODE 6560–50–F

40 CFR Part 180

[PP 4F4280/R2135; FRL–4963–1]

RIN 2070–AB78

Benzoic Acid; Pesticide Tolerance; Correction

AGENCY: Environmental Protection Agency (EPA).

ACTION: Final rule; Correction.

SUMMARY: In FR Doc. 95-13250 in the **Federal Register** of May 31, 1995, the following correction is made to the section heading in the first column of page 28347: Correct ''§ 180.842'' to read ''§ 180.482''.

EFFECTIVE DATE: July 5, 1995.

FOR FURTHER INFORMATION CONTACT: By mail: Richard P. Keigwin, Jr., Product Manager (PM) 10, Registration Division (7505C), Office of Pesticide Programs, Environmental Protection Agency, 401 M St., SW., Washington, DC 20460. Office location and telephone number: Rm. 214, CM #2, 1921 Jefferson Davis Hwy., Arlington, VA, (703)-305-6788; e-mail: keigwin.rick@epamail.epa.gov.

Dated: June 15, 1995.

Peter Caulkins,

Acting Director, Registration Division, Office of Pesticide Programs.

[FR Doc. 95–16427 Filed 7–3–95; 8:45 am]

BILLING CODE 6560–50–F

40 CFR Part 180

[PP 1F4026/R2147; FRL–4963–2]

RIN 2070–AB78

Cyfluthrin; Pesticide Tolerance

AGENCY: Environmental Protection Agency (EPA).

ACTION: Final rule.

SUMMARY: This rule establishes a time-limited tolerance for residues of the insecticide cyfluthrin (cyano(4-fluoro-3-phenoxyphenyl)methyl 3-(2,2-dichloroethenyl)-2,2-dimethylcyclopropanecarboxylate) in or on the raw agricultural commodities corn, sweet (K+CWHR); corn, grain, field and pop; and corn, forage and fodder, field, pop, and sweet at 0.01 part per million (ppm). The Agricultural Division of Miles, Inc., submitted a petition under the Federal Food, Drug and Cosmetic Act (FFDCA) to EPA for a regulation to establish a maximum permissible level for residues of the insecticide.

EFFECTIVE DATE: This regulation becomes effective July 5, 1995.

ADDRESSES: Written objections and hearing requests, identified by the document control number, [PP 1F4026/R2147], may be submitted to: Hearing Clerk (1900), Environmental Protection Agency, Rm. M3708, 401 M St., SW., Washington, DC 20460. Fees accompanying objections shall be labeled ''Tolerance Petition Fees'' and forwarded to: EPA Headquarters Accounting Operations Branch, OPP (Tolerance Fees), P.O. Box 360277M, Pittsburgh, PA 15251. A copy of any objections and hearing requests filed with the Hearing Clerk should be identified by the document control number and submitted to: Public Response and Program Resources Branch, Field Operations Division (7506C), Office of Pesticide Programs, Environmental Protection Agency, 401 M St., SW., Washington, DC 20460. In person, bring copy of objections and hearing requests to Rm. 1132, CM #2, 1921 Jefferson Davis Hwy., Arlington, VA 22202.

A copy of objections and hearing requests filed with the Hearing Clerk may also be submitted electronically by sending electronic mail (e-mail) to: opp-docket@epamail.epa.gov. Copies of objections and hearing requests must be submitted as an ASCII file avoiding the use of special characters and any form of encryption. Copies of objections and hearing requests will also be accepted on disks in WordPerfect in 5.1 file format or ASCII file format. All copies of objections and hearing requests in electronic form must be identified by the docket number [PP 1F4026/R2147]. No Confidential Business Information (CBI) should be submitted through e-mail. Electronic copies of objections and hearing requests on this rule may be filed online at many Federal Depository Libraries. Additional information on electronic submissions can be found below in this document.

FOR FURTHER INFORMATION CONTACT: By mail: Robert A. Forrest, Product Manager (PM) 14, Registration Division (7505C), Office of Pesticide Programs, Environmental Protection Agency, 401 M St., SW., Washington, DC 20460. Office location and telephone number: Rm. 219, CM #2, 1921 Jefferson Davis Hwy., Arlington, VA 22202, (703)-305-6600; e-mail: forrest.robert@epamail.epa.gov.

SUPPLEMENTARY INFORMATION: EPA issued a notice, published in the **Federal Register** of April 5, 1995 (60 FR 17356), which announced that Miles, Inc., P.O. Box 4913, Kansas City, MO 64120, had submitted a pesticide petition, PP 1F4026, to EPA requesting that the Administrator, pursuant to section 408(d) of the Federal Food, Drug, and Cosmetic Act (FFDCA), 21 U.S.C. 346a(d), establish a tolerance for residues of the insecticide cyfluthrin, cyano (4-fluoro-2-phenoxyphenyl)methyl-3-(2,2-dichloroethyl)-2,2-dimethylcyclopropanecarboxylate, in or on the raw agricultural commodities corn, fresh; corn, grain, field and pop; and corn, forage and fodder, field, pop, and sweet at 0.01 part per million (ppm). For consistency, the raw agricultural commodity corn, fresh is expressed as corn, sweet (K+CWHR).

There were no comments received in response to the notice of filing. The scientific data submitted in the petition and other relevant material have been evaluated. The toxicological data considered in support of the tolerance include:

1. Several acute toxicological studies placing the technical grade of the insecticide in toxicity category 1 (acute oral); 3 (acute dermal and primary eye irritation); 2 (acute inhalation) and 4 (primary dermal irritation). It is not a dermal sensitizer.

2. A 21-day rabbit dermal study with a no-observed-effect level (NOEL) greater than 250 mg/kg/day (highest dose tested).

3. A 21-day rat inhalation study with a NOEL of 0.0014 mg/L in which a decrease in body weight gain was observed.

4. A 90-day rat inhalation study with a NOEL of 0.00009 mg/L/day. Systemic effects observed included unthriftiness, unkept fur, lethargy, and increased urinary protein.

5. A chronic dog-feeding study with a NOEL of 4.0 mg/kg/day. Systemic effects of slight ataxia, increased vomiting, diarrhea, and decreased male body weights were observed at the lowest-effect level (LEL).

6. A two-year rat feeding/carcinogenicity study with a systemic NOEL of 2.5 mg/kg/day. Decreased body weights in males and inflammatory foci in kidneys of females were observed at the lowest-observed-effect level (LOEL) of 7.5 mg/kg/day. There was no evidence of carcinogenicity under conditions of the study. Levels tested were 50, 150, and 450 ppm.

7. A chronic mouse feeding/carcinogenicity study with a systemic NOEL of less than 7.5 mg/kg/day (lowest dose tested) in which increased alkaline phosphatase activity in males was observed. There was no evidence of carcinogenicity under conditions of the study. Levels tested were 50, 200, and 800 ppm.

8. A three-generation rat reproduction study with a NOEL of 7.5 mg/kg/day for reproductive effects and a systemic NOEL of 2.5 mg/kg/day. Decreased viability and decreased pup body weights were observed. Levels tested were 50, 150, and 450 ppm.

9. A rat oral developmental study with no clinical signs resulting from the test article. Levels tested were 1, 3, and 10 mg/kg/day.

A second rat oral developmental study with a maternal NOEL of 3 mg/kg/day and a LOEL of 10 mg/kg/day (high-stepping gait, occasional ataxia, and reduced motility). There were no developmental effects. Levels tested were 3, 10, and 30 mg/kg/day.

10. A rabbit oral developmental study with a developmental NOEL and LOEL of 20 mg/kg/day and 60 mg/kg/day, respectively, in which increased numbers of resorptions and percent incidence of postimplantation loss were observed at the LOEL. The maternal NOEL and LOEL were 20 mg/kg/day and 60 mg/kg/day, respectively, with decreased body weight gain and food consumption observed at the LOEL. Levels tested were 20, 60, and 180 mg/kg/day administered by gavage on gestational days 6 to 18, inclusively.

11. A rat inhalation developmental study with a developmental NOEL and LOEL of 0.00059 mg/L and 0.0011 mg/L, respectively, with unspecified sternal anomalies and increased runt incidence observed at the LOEL. The maternal NOEL and LOEL were 0.0011 mg/L and 0.0047 mg/L, respectively, with reduced motility, dyspnea, piloerection, ungroomed coats, and eye irritation observed at the LOEL.

12. A rat inhalation developmental study with a NOEL and LOEL of 0.46 and 2.55 mg/m^3, respectively, with reduced fetal and placental weight, reduced ossification in the phalanx, metacarpals and vertebrae observed at the LOEL. The maternal LOEL was less than 0.46 mg/m^3 with decreased body weight gain and reduced relative food efficiency observed at this dose level.

13. Mutagenicity studies including a CHO/HGPRT gene mutation test, a structural chromosome aberration: sister chromatid exchange, and an unscheduled DNA synthesis, which were all negative for mutagenic effects.

14. Two metabolism studies in rats showing that the test material was rapidly and nearly completely absorbed and that the radioactivity was rapidly and nearly completely excreted in the urine and feces by 48 hours. The studies showed that the parent is cleaved at the ester bond and then oxidized to yield 3-phenoxy-4-fluorobenzoic acid. This intermediate is then either hydroxylated and subsequently conjugated and excreted, or first bound to glycine and then hydroxylated, conjugated, and excreted.

The Reference Dose (RfD) is established at 0.025 mg/kg day, based on an NOEL of 2.5 mg/kg/day from the 2-year rat feeding study and an uncertainty factor of 100. The Theoretical Maximum Residue Contribution (TMRC) from established tolerances and the current action is estimated at 0.002730 mg/kg bwt/day and utilizes 11.0 percent of the RfD for the U.S. population. The TMRC for the subgroup most highly exposed, nonnursing infants less than 1-year old, utilizes 32.0 percent of the RfD.

Because there was a sign of developmental effects seen in animal studies, the Agency used the rabbit developmental toxicity study with a maternal NOEL of 20 mg/kg/day to assess acute dietary exposure and determine a margin of exposure (MOE) for the overall U.S. population and certain subgroups. Since the toxicological end-point pertains to developmental toxicity, the population group of concern for this analysis is women aged 13 and above, the subgroup which most closely approximates women of child-bearing age. The MOE is calculated as the ratio of the NOEL to the exposure. For this analysis the Agency calculated the MOE for women aged 13 and above to be 1,250. Generally speaking, MOE's greater than 100 for data derived from animal studies are acceptable to the Agency.

The nature of the residues in plants is adequately understood. The nature of residue in animals is adequately understood for the purpose of the requested tolerances. An adequate analytical method, gas chromatography, is available for enforcement purposes.

The enforcement methodology has been submitted to the Food and Drug Administration for publication in the Pesticide Analytical Manual, Volume II (PAM). Because of the long lead time for publication of the method in PAM II, the analytical methodology is being made available in the interim to anyone interested in pesticide enforcement when requested from: Calvin Furlow, Public Response and Program Resources Branch, Field Operations Division (7506C), Office of Pesticide Programs, Environmental Protection Agency, 401 M St., SW., Washington, DC 20460. Office location and telephone number: Rm. 1132, CM #2, 1921 Jefferson Davis Highway, Arlington, VA 22202, (703)-305-5232.

Any secondary residues occurring in milk and the meat, fat, and meat by-products (mbyp) of cattle, goats, hogs, horses, and sheep will fall within existing tolerances for these commodities. There is no reasonable expectation that secondary residues will occur in eggs, and the meat, fat, and mbyp of poultry as a result of this action. The pesticide is considered useful for the purpose for which the tolerance is sought.

To be consistent with the conditional registration and the regulation for establishing a time-limited tolerance for residues of another insecticide, O-[2-(1,1-dimethlyethyl)-5-pyrimidinyl] O-ethyl-O-(1-methylethyl) phosphorothioate, which are being issued both in conjunction with, and concurrently with, this regulation, the Agency is limiting the period of time that the regulation is to be in effect. The conditional registration is for a product consisting of cyfluthrin in combination with the other insecticide as the two active ingredients. Upon receipt and evaluation of the additional data/information required as a condition of the time-limited tolerance for the other insecticide and of the conditional registration for the use of these two insecticides on corn, the Agency will reassess the tolerances and the registration and, if appropriate, will issue permanent tolerances and an unconditional registration for the insecticides on corn.

There are currently no actions pending against the continued registration of this chemical.

Elsewhere in this issue of the **Federal Register**, the Agency is concurrently issuing a notice of conditional registration for the use of the combination product on corn and for a time-limited tolerance for residues of the other insecticide referenced above in/on corn commodities.

Based on the information and data considered, the Agency has determined that the tolerance established by amending 40 CFR 180.436 will protect the public health. Therefore, the tolerance is established as set forth below.

Any person adversely affected by this regulation may, within 30 days after publication of this document in the **Federal Register**, file written objections to the regulation and may also request a hearing on those objections.

Objections and hearing requests must be filed with the Hearing Clerk, at the address given above (40 CFR 178.20). A copy of the objections and/or hearing requests filed with the Hearing Clerk should be submitted to the OPP docket for this rulemaking. The objections submitted must specify the provisions of the regulation deemed objectionable and the grounds for the objections (40 CFR 178.25). Each objection must be accompanied by the fee prescribed by 40 CFR 180.33(i). If a hearing is requested, the objections must include a statement of the factual issue(s) on which a hearing is requested, the requestor's contentions on such issues, and a summary of any evidence relied upon by the objector (40 CFR 178.27). A request for a hearing will be granted if the Administrator determines that the material submitted shows the following: There is genuine and substantial issue of fact; there is a reasonable possibility that available evidence identified by the requestor would, if established, resolve one or more of such issues in favor of the requestor, taking into account uncontested claims or facts to the contrary; and resolution of the factual issue(s) in the manner sought by the requestor would be adequate to justify the action requested (40 CFR 178.32).

A record has been established for this rulemaking under docket number [PP 1F4026/R2147] (including objections and hearing requests submitted electronically as described below). A public version of this record, including printed, paper versions of electronic comments, which does not include any information claimed as CBI, is available for inspection from 8 a.m. to 4:30 p.m., Monday through Friday, excluding legal holidays. The public record is located in Room 1132 of the Public Response and Program Resources Branch, Field Operations Division (7506C), Office of Pesticide Programs, Environmental Protection Agency, Crystal Mall #2, 1921 Jefferson Davis Highway, Arlington, VA.

Written objections and hearing requests, identified by the document control number [PP 1F4026/R2147], may be submitted to the Hearing Clerk (1900), Environmental Protection Agency, Rm. 3708, 401 M St., SW., Washington, DC 20460.

A copy of electronic objections and hearing requests filed with the Hearing Clerk can be sent directly to EPA at:
opp-Docket@epamail.epa.gov

A copy of electronic objections and hearing requests filed with the Hearing Clerk must be submitted as an ASCII file avoiding the use of special characters and any form of encryption.

The official record for this rulemaking, as well as the public version, as described above will be kept in paper form. Accordingly, EPA will transfer any objections and hearing requests received electronically into printed, paper form as they are received and will place the paper copies in the official rulemaking record which will also include all objections and hearing requests submitted directly in writing. The official rulemaking record is the paper record maintained at the address in ''ADDRESSES'' at the beginning of this document.

Under Executive Order 12866 (58 FR 51735, October 4, 1993), the Agency must determine whether the regulatory action is ''significant'' and therefore subject to all the requirements of the Executive Order (i.e., Regulatory Impact Analysis, review by the Office of Management and Budget (OMB)). Under section 3(f), the order defines ''significant'' as those actions likely to lead to a rule (1) having an annual effect on the economy of $100 million or more, or adversely and materially affecting a sector of the economy, productivity, competition, jobs, the environment, public health or safety, or State, local or tribal governments or communities (also known as ''economically significant''); (2) creating serious inconsistency or otherwise interfering with an action taken or planned by another agency; (3) materially altering the budgetary impacts of entitlement, grants, user fees, or loan programs; or (4) raising novel legal or policy issues arising out of legal mandates, the President's priorities, or the principles set forth in this Executive Order.

Pursuant to the terms of this Executive Order, EPA has determined that this rule is not ''significant'' and is therefore not subject to OMB review.

Pursuant to the requirements of the Regulatory Flexibility Act (Pub. L. 96-354, 94 Stat. 1164, 5 U.S.C. 601-612), the Administrator has determined that regulations establishing new tolerances or raising tolerance levels or establishing exemptions from tolerance requirements do not have a significant economic impact on a substantial number of small entities. A certification statement to this effect was published in the **Federal Register** of May 4, 1981 (46 FR 24950).

List of Subjects in 40 CFR Part 180

Environmental protection, Administrative practice and procedure, Agricultural commodities, Pesticides and pests, Reporting and recordkeeping requirements.

Dated: June 23, 1995.

Daniel M. Barolo,

Director, Office of Pesticide Programs.

Therefore, 40 CFR part 180 is amended as follows:

PART 180—[AMENDED]

1. The authority citation for part 180 continues to read as follows:

Authority: 21 U.S.C. 346a and 371.

2. In § 180.436, by designating the existing text as paragraph (a) and adding new paragraph (b), to read as follows:

§ 180.436 Cyfluthrin; tolerances for residues.

(a) * * *

(b) Time-limited tolerances are established for residues of the insecticide cyfluthrin (cyano(4-fluoro-3-phenoxyphenyl)methyl 3-(2,2-dichloroethenyl)-2,2-dimethylcyclopropanecarboxylate; CAS Reg. No 68359-37-5) in or on the following raw agricultural commodities:

Commodity	Parts per million	Expiration date
Corn, forage and fodder, field, pop, and sweet	0.01	July 5, 1999
Corn, grain, field and pop	0.01	Do.
Corn, sweet (K+CWHR)	0.01	Do.

[FR Doc. 95–16426 Filed 7–3–95; 8:45 am]

BILLING CODE 6560–50–F

40 CFR Parts 180, 185, and 186

[PP 1F3992, 2F4109, 2F4114, 7F3488, 7F3560, 9F3770, FAP 7H3560 and 7H5543/R2143; FRL–4960–6]

RIN 2070–AB78

Lambda Cyhalothrin; Pesticide Tolerances

AGENCY: Environmental Protection Agency (EPA).

ACTION: Final rule.

SUMMARY: This document establishes time-limited tolerances with an expiration date of November 15, 1997, for residues of the synthetic pyrethroid lambda-cyhalothrin in or on the raw agricultural commodities (RACs) soybeans; wheat, forage, hay, straw, and grain dust; sweet corn; sunflower, seeds and forage; sorghum grain and dust; corn (grain, field and pop); corn fodder and forage; peanuts; meat, fat, and meat byproducts (mbyp) and eggs of poultry

and increased tolerances in milk, fat, and meat and mbyp of cattle, goats, hogs, horses, and sheep; and in or on the processed food/feed items corn grain flour, sunflower hulls, sunflower oil, and wheat bran. Zeneca Ag Products, Inc., and Coopers Animal Health, Inc., submitted petitions to EPA requesting these regulations pursuant to the Federal Food, Drug and Cosmetic Act (FFDCA).

EFFECTIVE DATE: This regulation becomes effective July 5, 1995.

ADDRESSES: Written objections and hearing requests, identified by the document control number, [PP 1F3992, 2F4109, 2F4114, 7F3488, 7F3560, 9F3770, FAP 7H3560, and 7H5543/R2143], may be submitted to: Hearing Clerk (1900), Environmental Protection Agency, Rm. M3708, 401 M St., SW., Washington, DC 20460. Fees accompanying objections and hearing requests shall be labeled ''Tolerance Petition Fees'' and forwarded to: EPA Headquarters Accounting Operations Branch, OPP (Tolerance Fees), P.O. Box 360277M, Pittsburgh, PA 15251. A copy of any objections and hearing requests filed with the Hearing Clerk should be identified by the document control number and submitted to: Public Response and Program Resources Branch, Field Operations Division (7506C), Office of Pesticide Programs, Environmental Protection Agency, 401 M St., SW., Washington, DC 20460. In person, bring copy of objections and hearing requests to: Rm. 1132, CM #2, 1921 Jefferson Davis Hwy., Arlington, VA 22202.

A copy of objections and hearing requests filed with the Hearing Clerk may also be submitted electronically by sending electronic mail (e-mail) to: opp-docket@epamail.epa.gov. Copies of objections and hearing requests must be submitted as an ASCII file avoiding the use of special characters and any form of encryption. Copies of objections and hearing requests will also be accepted on disks in WordPerfect in 5.1 file format or ASCII file format. All copies of objections and hearing requests in electronic form must be identified by the docket number [PP 1F3992, 2F4109, 2F4114, 7F3488, 7F3560, 9F3770, FAP 7H3560, and 7H5543/R2143]. No Confidential Business Information (CBI) should be submitted through e-mail. Electronic copies of objections and hearing requests on this rule may be filed online at many Federal Depository Libraries. Additional information on electronic submissions can be found below in this document.

FOR FURTHER INFORMATION CONTACT: By mail: George T. LaRocca, Product Manager (PM) 13, Registration Division (7505C), Environmental Protection Agency, 401 M St., SW., Washington, DC 20460. Office location and telephone number: Second Floor, Crystal Mall #2, 1921 Jefferson Davis Hwy., Arlington, VA 22202, (703)-305-6100; e-mail: larocca.george.epamail.epa.gov.

SUPPLEMENTARY INFORMATION: In the **Federal Register** of April 28, 1995 (60 FR 20946), EPA issued a proposed rule that gave notice of a proposed amendment to 40 CFR parts 180, 185, and 186 to establish various time-limited tolerances and food/feed additive regulations, to expire on November 15, 1997, for residues of the pyrethroid lambda-cyhalothrin. The proposal was issued pursuant to petitions submitted to EPA under the Federal Food, Drug and Cosmetic Act (21 U.S.C. 346a(d) and 348(e)) by Zeneca, Inc. (formerly ICI Americas, Inc.), 1800 Concord Pike, Wilmington DE 19897 (PP 7F3488, 78F3560, 1F3992, 2F4109, 2F4114, 7H3560, and 7H5543) and by Coopers Animal Health, Inc., P.O. Box 419167, Kansas City, MO 64141-0167 (PP 9F3770).

There were no comments or requests for referral to an advisory committee received in response to the proposed rule.

The data submitted with the proposal and other relevant material have been evaluated and discussed in the proposed rule. Based on the data and information considered, the Agency concludes that the time-limited tolerances and food/feed additive regulations will protect the public health. Therefore, the tolerances and food/feed additive regulations are established as set forth below.

Any person adversely affected by this regulation may, within 30 days after publication of this document in the **Federal Register,** file written objections and/or request a hearing with the Hearing Clerk, at the address given above (40 CFR 178.20). A copy of the objections and/or hearing requests filed with the Hearing Clerk should be submitted to the OPP docket for this rulemaking. The objections submitted must specify the provisions of the regulation deemed objectionable and the grounds for the objections (40 CFR 178.25). Each objection must be accompanied by the fee prescribed by 40 CFR 180.33(i). If a hearing is requested, the objections must include a statement of the factual issue(s) on which a hearing is requested, the requestor's contentions on such issues, and a summary of any evidence relied upon by the objector (40 CFR 178.27). A request for a hearing will be granted if the Administrator determines that the material submitted shows the following: There is a genuine and substantial issue of fact; there is a reasonable possibility that available evidence identified by the requestor would, if established, resolve one or more of such issues in favor of the requestor, taking into account uncontested claims or facts to the contrary; and resolution of the factual issue(s) in the manner sought by the requestor would be adequate to justify the action requested (40 CFR 178.32).

A record has been established for this rulemaking under docket number [PP 1F3992, 2F4109, 2F4114, 7F3488, 7F3560, 9F3770, FAP 7H3560, and 7H5543/R2143] (including any objections and hearing requests submitted electronically as described below). A public version of this record, including printed, paper versions of electronic comments, which does not include any information claimed as CBI, is available for inspection from 8 a.m. to 4:30 p.m., Monday through Friday, excluding legal holidays. The public record is located in Room 1132 of the Public Response and Program Resources Branch, Field Operations Division (7506C), Office of Pesticide Programs, Environmental Protection Agency, Crystal Mall #2, 1921 Jefferson Davis Highway, Arlington, VA.

Written objections and hearing requests, identified by the document control number [PP 1F3992, 2F4109, 2F4114, 7F3488, 7F3560, 9F3770, FAP 7H3560, and 7H5543/R2143], may be submitted to the Hearing Clerk (1900), Environmental Protection Agency, Rm. 3708, 401 M St., SW., Washington, DC 20460.

A copy of electronic objections and hearing requests filed with the Hearing Clerk can be sent directly to EPA at:

opp-Docket@epamail.epa.gov

A copy of electronic objections and hearing requests filed with the Hearing Clerk must be submitted as an ASCII file avoiding the use of special characters and any form of encryption.

The official record for this rulemaking, as well as the public version, as described above will be kept in paper form. Accordingly, EPA will transfer any objections and hearing requests received electronically into printed, paper form as they are received and will place the paper copies in the official rulemaking record which will also include all objections and hearing requests submitted directly in writing. The official rulemaking record is the paper record maintained at the address in ''ADDRESSES'' at the beginning of this document.

Under Executive Order 12866 (58 FR 51735, Oct. 4, 1993), the Agency must determine whether the regulatory action is ''significant'' and therefore subject to review by the Office of Management and Budget (OMB) and the requirements of the Executive Order. Under section 3(f), the order defines a ''significant regulatory action'' as an action that is likely to result in a rule (1) having an annual effect on the economy of $100 million or more, or adversely and materially affecting a sector of the economy, productivity, competition, jobs, the environment, public health or safety, or State, local, or tribal governments or communities (also referred to as ''economically significant''); (2) creating serious inconsistency or otherwise interfering with an action taken or planned by another agency; (3) materially altering the budgetary impacts of entitlement, grants, user fees, or loan programs or the rights and obligations of recipients thereof; or (4) raising novel legal or policy issues arising out of legal mandates, the President's priorities, or the principles set forth in this Executive Order.

Pursuant to the terms of the Executive Order, EPA has determined that this rule is not ''significant'' and is therefore not subject to OMB review.

Pursuant to the requirements of the Regulatory Flexibility Act (Pub. L. 96-354, 94 Stat. 1164, 5 U.S.C. 601-612), the Administrator has determined that regulations establishing new tolerances or raising tolerance levels or establishing exemptions from tolerance requirements do not have a significant economic impact on a substantial number of small entities. A certification statement to this effect was published in the **Federal Register** of May 4, 1981 (46 FR 24950).

List of Subjects in 40 CFR Part 180

Environmental protection, Administrative practice and procedure, Agricultural commodities, Pesticides and pests, Reporting and recordkeeping requirements.

Dated: June 5, 1995.

Stephen L. Johnson,

Director, Registration Division, Office of Pesticide Programs.

Therefore, chapter I of title 40 of the Code of Federal Regulations is amended as follows:

PART 180—[AMENDED]

1. In part 180:

a. The authority citation for part 180 continues to read as follows:

Authority: 21 U.S.C. 346a and 371.

b. By amending § 180.438, by revising the table therein, to read as follows:

§ 180.438 Lambda-cyhalothrin; tolerance for residues.

* * * * *

Commodity	Parts per million
Broccoli	0.4
Cabbage	0.4
Cattle, fat	3.0
Cattle, meat	0.2
Cattle, mbyp	0.2
Corn, grain (field and pop)	0.05
Corn, fodder	1.0
Corn, forage	6.0
Corn, sweet (K + kwhr)	0.05
Cottonseed	0.05
Dry bulb onion	0.1
Eggs	0.01
Garlic	0.02
Goats, fat	3.0
Goats, meat	0.2
Goats, mbyp	0.2
Hogs, fat	3.0
Hogs, meat	0.2
Hogs, mbyp	0.2
Horses, fat	3.0
Horses, meat	0.2
Horses, mbyp	0.2
Lettuce, head	2.0
Milk, fat (reflecting 0.2 ppm in whole milk)	5.0
Peanuts	0.05
Peanut, hulls	0.05
Poultry, fat	0.01
Poultry, meat	0.01
Poultry, mbyp	0.01
Sheep, fat	3.0
Sheep, meat	0.2
Sheep, mbyp	0.2
Soybeans	0.01
Sorghum, grain	0.2
Sorghum, grain dust	1.5
Sunflower, seeds	0.2
Sunflower,forage	0.20
Tomatoes	0.1
Wheat, grain	0.05
Wheat, forage	2.0
Wheat, hay	2.0
Wheat, straw	2.0
Wheat, grain dust	2.0

PART 185—[AMENDED]

2. In part 185

a. The authority citation for part 185 continues to read as follows:

Authority: 21 U.S.C. 346a and 348.

b. By redesignating § 185.1310 as § 185.3765, by revising the heading, and by adding new paragraph (c), to read as follows:

§ 185.3765 Lambda-cyhalothrin.

* * * * *

(c) A tolerance, to expire on November 15, 1997, is established for the combined residues of the insecticide lambda-cyhalothrin and its epimer expressed as lambda-cyhalothrin, a 1:1 mixture of (*S*)-α-cyano-3-phenoxybenzyl-(*Z*)-(1*R*,3*R*)-3-(2-chloro-3,3,3-trifluoroprop-1-enyl)-2,2-dimethylcyclopropanecarboxylate and (*R*)-α-cyano-3-phenoxybenzyl-(*Z*)-(1*S*,3*S*)-3-(2-chloro-3,3,3-trifluoroprop-1-enyl)-2,2-dimethylcyclopropanecarboxylate and its epimer of lambda-cyhalothrin, a 1:1 mixture of (*S*)-α-cyano-3-phenoxybenzyl-(*Z*)-(1*S*,3*S*)-3-(2-chloro-3,3,3-trifluoroprop-1-enyl)-2,2-dimethylcyclopropanecarboxylate and (*R*)-α-cyano-3-phenoxybenzyl-(*Z*)-(1*R*,3*R*)-3-(2-chloro-3,3,3-trifluoroprop-1-enyl)-2,2-dimethylcyclopropanecarboxylate in or on the following food commodities:

Food	Parts per million
Corn, grain flour	0.15
Sunflower, oil	0.30
Wheat, bran	0.2

PART 186—[AMENDED]

3. In part 186

a. The authority citation for part 186 continues to read as follows:

Authority: 21 U.S.C. 348

b. By revising § 186.3765, to read as follows:

§ 186.3765 Lambda-cyhalothrin.

A tolerance, to expire on November 15, 1997, is established for the combined residues of the insecticide lambda-cyhalothrin and its epimer expressed as lambda-cyhalothrin, a 1:1 mixture of (*S*)-α-cyano-3-phenoxybenzyl-(*Z*)-(1*R*,3*R*)-3-(2-chloro-3,3,3-trifluoroprop-1-enyl)-2,2-dimethylcyclopropanecarboxylate and (*R*)-α-cyano-3-phenoxybenzyl-(*Z*)-(1*S*,3*S*)-3-(2-chloro-3,3,3-trifluoroprop-1-enyl)-2,2-dimethylcyclopropanecarboxylate and its epimer of lambda-cyhalothrin, a 1:1 mixture of (*S*)-α-cyano-3-phenoxybenzyl-(*Z*)-(1*S*,3*S*)-3-(2-chloro-3,3,3-trifluoroprop-1-enyl)-2,2-dimethylcyclopropanecarboxylate and (*R*)-α-cyano-3-phenoxybenzyl-(*Z*)-(1*R*,3*R*)-3-(2-chloro-3,3,3-trifluoroprop-1-enyl)-2,2-dimethylcyclopropanecarboxylate in or on the following feed commodities:

Food	Parts per million
Sunflower, hulls	0.50
Tomato pomace (dry or wet)	6.0
Wheat, bran	0.2

[FR Doc. 95–16433 Filed 7–3–95; 8:45 am]
BILLING CODE 6560–50–F

40 CFR Part 281

[FRL–5253–6]

Connecticut; Final Approval of State Underground Storage Tank Program

AGENCY: Environmental Protection Agency.

ACTION: Notice of final determination on the State of Connecticut's application for final approval.

SUMMARY: The State of Connecticut has applied for final approval of its Underground Storage Tank (UST) Program under Subtitle I of the Resource Conservation and Recovery Act. The Environmental Protection Agency (EPA) has reviewed Connecticut's application and has reached a final determination that Connecticut's UST program satisfies all the requirements necessary to qualify for final EPA approval. Thus, EPA is granting final approval to the State of Connecticut to operate its program in lieu of the Federal UST program.

EFFECTIVE DATE: Final approval for the State of Connecticut shall be effective at 1:00 p.m. on August 4, 1995.

FOR FURTHER INFORMATION CONTACT: Jonathan Walker, Office of Underground Storage Tanks, HPU–CAN7, U.S. EPA, Region I, JFK Federal Building, Boston, MA 02203, (617) 573–9602.

SUPPLEMENTARY INFORMATION:

A. Background

Section 9004 of the Resource Conservation and Recovery Act (RCRA) enables EPA to approve state underground storage tank programs to operate in a state in lieu of the Federal underground storage tank program. To qualify for final authorization, a state's program must: (1) be ''no less stringent'' than the Federal program, and (2) provide for adequate enforcement. Section 9004 (a) and (b) of RCRA, 42 U.S.C. 6991c (a) and (b).

On January 19, 1995, as required by 40 CFR 281.50(c), EPA acknowledged receiving from the State of Connecticut a complete official application requesting final approval to administer its underground storage tank program. On May 19, 1995, EPA published a tentative decision announcing its intent to grant Connecticut final approval of its program. See 60 FR 26859 (1995). Further background on EPA's tentative decision to grant approval is included in that decision.

Along with the tentative determination, EPA announced the availability of the application for public comment and the date of a public hearing on the application. EPA requested advance notice for testimony and reserved the right to cancel for lack of public interest. Since there was no public interest, the public hearing was canceled. No public comments were received regarding EPA's approval of Connecticut's underground storage tank program.

B. Decision

I conclude that the State of Connecticut's application for final approval meets all of the statutory and regulatory requirements established by Subtitle I of RCRA. Accordingly, the State of Connecticut is granted final approval to operate its underground storage tank program in lieu of the federal program. The State of Connecticut now has the responsibility for managing all regulated underground storage tank facilities within its borders and carrying out all aspects of the Federal underground storage tank program, except with regard to Indian lands, where EPA will continue to have regulatory authority. The State of Connecticut also has primary enforcement responsibility, although EPA retains the right to conduct inspections under Section 9005 of RCRA, 42 U.S.C. 6991d, and to take enforcement actions under Section 9006 of RCRA, 42 U.S.C. 6991e. EPA will continue to work together with the Connecticut Department of Environmental Protection (DEP) in its ongoing commitment and efforts to address environmental justice concerns in low-income urban and minority neighborhoods in the State.

Compliance With Executive Order 12866

The Office of Management and Budget has exempted this rule from the requirements of Section 6 of Executive Order 12866.

Certification Under the Regulatory Flexibility Act

Pursuant to the provisions of 5 U.S.C. 605(b), I hereby certify that the approval will not have a significant economic impact on a substantial number of small entities. This approval effectively suspends the applicability of certain federal regulations in favor of the State of Connecticut's program, thereby eliminating duplicative requirements for owners and operators of underground storage tanks within the State. It does not impose any new burdens on small entities. This rule, therefore, does not require flexibility analysis.

List of Subjects in 40 CFR Part 281

Environmental protection, Hazardous substances, Intergovernmental relations, State program approval, Underground storage tanks, Water pollution control.

Dated: June 27, 1995.

John P. DeVillars,

Regional Administrator.

[FR Doc. 95–16417 Filed 7–3–95; 8:45 am]
BILLING CODE 6560–50–M

40 CFR Parts 712 and 716

[OPPTS–82046; FRL–4954–9]

Preliminary Assessment Information and Health and Safety Data Reporting; Addition of Chemicals

AGENCY: Environmental Protection Agency (EPA).

ACTION: Final rule.

SUMMARY: The Interagency Testing Committee (ITC) in its 35th Report to EPA revised the Toxic Substances Control Act (TSCA) Section 4(e) Priority List by designating for testing 25 chemical substances. The ITC recommendations must be given priority consideration by EPA in promulgating test rules. EPA is adding certain of these chemical substances to two model information-gathering rules: the TSCA Section 8(a) Preliminary Assessment Information Rule (PAIR) and the TSCA Section 8(d) Health and Safety Data Reporting Rule. These model rules will require manufacturers and importers of the substances identified herein to report certain production, use and exposure-related information, and manufacturers, importers, and processors of the listed substances to report unpublished health and safety data to EPA.

DATES: This rule will become effective on August 4, 1995.

FOR FURTHER INFORMATION CONTACT: Susan B. Hazen, Director, TSCA Environmental Assistance Division (7408), Office of Pollution Prevention and Toxics, Environmental Protection Agency, 401 M St., SW., Rm. E–543, Washington, DC 20460, Telephone: (202) 554–1404, TDD: (202) 554–0551.

SUPPLEMENTARY INFORMATION: This rule adds 24 chemical substances to the PAIR and 12 chemical substances to the section 8(d) Health and Safety Data Reporting Rule. Manufacturers, importers, and processors of these chemicals will be required to report unpublished health and safety data, and manufacturers and importers will be required to report end use, exposure, and production volume data to EPA.

Because the ITC has expressed no need for ecological effects information for the 12 substances being added to the section 8(d) rule under the category designated ''OSHA Chemicals in Need of Dermal Absorption Testing,'' EPA is exempting from ecological effects data reporting these substances under the section 8(d) rule. Also, for substances being added to the 8(d) rule by this action, EPA is exempting certain studies on mixtures containing 8(d)-listed substances at levels below 1 percent of the mixture. For further information on these exemptions, see Unit III. of this preamble.

I. Background

Section 4(e) of TSCA established the ITC and authorized it to recommend to EPA chemical substances and mixtures (chemicals) to be given priority consideration in proposing test rules under section 4. For some of these chemicals, the ITC may designate that EPA must respond to its recommendations within 12 months. In this time, EPA must either initiate a rulemaking to test the chemical or publish in the **Federal Register** its reasons for not doing so.

On November 3, 1994, EPA announced the receipt of the 35th Report of the ITC, and it was then published in the **Federal Register** of December 29, 1994 (59 FR 67596). The 35th report revises the Committee's priority list of chemicals by designating for testing 25 chemical substances to the section 4(e) priority list.

This rule adds 24 substances to the the section 8(a) Preliminary Assessment Information Reporting Rule and 12 substances to the section 8(d) Health and Safety Data Reporting Rule. These two rules are model information gathering rules which assist the ITC in making testing recommendations and aid EPA in responding to the ITC recommendations.

EPA issued the PAIR under section 8(a) of TSCA (15 U.S.C. 2607(a)), and it is codified at 40 CFR part 712. This model section 8(a) rule establishes standard reporting requirements for manufacturers and importers of the chemicals listed in the rule at 40 CFR 712.30. These manufacturers and importers are required to submit a one-time report on general volume, end use, and exposure-related information using the Preliminary Assessment Information Manufacturer's Report (EPA Form 7710–35). EPA uses this model section 8(a) rule to gather current information on chemicals of concern quickly.

EPA issued the model Health and Safety Data Reporting Rule under section 8(d) of TSCA (15 U.S.C. 2607(d)), and it is codified at 40 CFR part 716. The section 8(d) model rule requires past, current, and prospective manufacturers, importers, and processors of listed chemicals to submit to EPA copies and lists of unpublished health and safety studies on the listed chemicals that they manufacture, import, or process. These studies provide EPA with useful information and have provided significant support for EPA's decisionmaking under TSCA sections 4, 5, 6, 8, and 9.

These rules provide for the automatic addition of ITC priority list chemicals. Whenever EPA announces the receipt of an ITC report, EPA may, without further notice and comment, amend the model information-gathering rule by adding the recommended (or designated) chemicals. The amendment adding these chemicals to the PAIR and Health and Safety Data Reporting Rule becomes effective 30 days after publication in the **Federal Register**.

II. Chemicals To Be Added

In its 35th Report to EPA, the ITC designated 25 chemical substances for dermal absorption testing. EPA is adding 24 substances to the section 8(a) PAIR and 12 substances to the section 8(d) Health and Safety Data Reporting Rule. EPA is not adding cyclohexanone (CAS No. 108–94–1) to section 8(a) or section 8(d) because of the ITC's decision to remove this chemical substance from the testing priority list in its 36th report. EPA is not adding to the section 8(d) model rule 12 of the substances listed in the ITC report because the substances were previously listed on the section 8(d) rule and are currently subject to reporting or have recently ended the 10–year reporting period. These 12 substances are listed below.

Substance	CAS No.	FR Cite
Acetonitrile	75–05–8	47 FR 38791, September 2, 1982
Benzene, 1,2-dichloro-	95–50–1	47 FR 38791, September 2, 1982
Benzene, 1,4-dichloro-	106–46–7	47 FR 38791, September 2, 1982
1,1'-Biphenyl	92–52–4	48 FR 13178, March 30, 1983
Dipropylene glycol monomethyl ether	34590–94–8	54 FR 8484, February 28, 1989
Ethane, 1,2-dichloro-	107–06–2	52 FR 16022, May 1, 1987
Formamide	75–12–7	47 FR 38791, September 2, 1982
Isophorone	78–59–1	47 FR 38791, September 2, 1982
Naphthalene	91–20–3	52 FR 16022, May 1, 1987
Propane, 1,2-dichloro-	78–87–5	47 FR 38791, September 2, 1982
Propane, 1,2,3-trichloro-	96–18–4	47 FR 38791, September 2, 1982
1-Propanol, 2-methyl-	78–83–1	51 FR 2890, January 22, 1986

For a complete listing of the substances being added to the section 8(d) model rule and the PAIR, see the regulatory text section of this document.

III. Exemptions

For the 12 substances being added to the section 8(d) rule, EPA is exempting certain types of studies from the 8(d) rule reporting requirements of 40 CFR part 716 because no ITC member has indicated a current need for the specific study types. The study types being specially exempted in this action include: (1) Ecological effects data and (2) studies conducted on mixtures (e.g., formulated products) containing a subject substance at a level below 1 percent of the mixture, unless a purpose of the study includes the investigation of the effects of an 8(d) rule-listed substance at levels below 1 percent. EPA may later require the reporting of the types of studies being exempted at this time, via an amendment to this rule using notice and comment procedures,

if circumstances indicate a need for the data.

IV. Reporting Requirements

A. Preliminary Assessment Information Rule

All persons who manufactured or imported the chemical substances named in this rule during their latest complete corporate fiscal year must submit a Preliminary Assessment Information Manufacturer's Report (EPA Form No. 7710–35) for each manufacturing or importing site at which they manufactured or imported a named substance. A separate form must be completed for each substance and submitted to the Agency no later than October 3, 1995. Persons who have previously and voluntarily submitted a Manufacturer's Report to the ITC or EPA may be able to submit a copy of the original Report to EPA or to notify EPA by letter of their desire to have this voluntary submission accepted in lieu of a current data submission. See § 712.30(a)(3).

Details of the reporting requirements, the basis for exemptions, and a facsimile of the reporting form, are provided in 40 CFR part 712. Copies of the form are available from the TSCA Environmental Assistance Division at the address listed under FOR FURTHER INFORMATION CONTACT.

B. Health and Safety Data Reporting Rule

Listed below are the general reporting requirements of the section 8(d) model rule.

1. Persons who, in the 10 years preceding the date a substance is listed, either have proposed to manufacture, import, or process, or have manufactured, imported, or processed, the listed substance must submit to EPA: A copy of each health and safety study which is in their possession at the time the substance is listed.

2. Persons who, at the time the substance is listed, propose to manufacture, import, or process; or are manufacturing, importing, or processing the listed substance must submit to EPA:

a. A copy of each health and safety study which is in their possession at the time the substance is listed.

b. A list of health and safety studies known to them but not in their possession at the time the substance is listed.

c. A list of health and safety studies that are ongoing at the time the substance is listed and are being conducted by or for them.

d. A list of each health and safety study that is initiated after the date the substance is listed and is conducted by or for them.

e. A copy of each health and safety study that was previously listed as ongoing or subsequently initiated and is now complete--regardless of completion date.

3. Persons who, after the time the substance is listed, propose to manufacture, import, or process the listed substance must submit to EPA:

a. A copy of each health and safety study which is in their possession at the time they propose to manufacture, import, or process the listed substance.

b. A list of health and safety studies known to them but not in their possession at the time they propose to manufacture, import, or process the listed substance.

c. A list of health and safety studies that are ongoing at the time they propose to manufacture, import, or process the listed substance, and are being conducted by or for them.

d. A list of each health and safety study that is initiated after the time they propose to manufacture, import, or process the listed substance, and is conducted by or for them.

e. A copy of each health and safety study that was previously listed as ongoing or subsequently initiated and is now complete--regardless of the completion date.

The bulk of reporting is required at the time the substance is listed. Persons described in categories 1 and 2 do all or most of their health and safety data reporting at the start of the reporting period. The remaining reporting requirements, specifically categories 2(d), 2(e), and 3, continue prospectively.

Detailed guidance for reporting unpublished health and safety data is provided in the **Federal Register** of September 15, 1986 (51 FR 32720).

C. Submission of PAIR Reports and Section 8(d) Studies

PAIR reports and section 8(d) health and safety studies must be sent to:

TSCA Document Processing Center (7407), Office of Pollution Prevention and Toxics, Environmental Protection Agency, 401 M St., SW., Washington, DC 20460, ATTN: (insert PAIR or 8(d) Reporting).

D. Removal of Chemical Substances from the Rules

Any person who believes that section 8(a) and/or 8(d) reporting required by this action is unwarranted, should promptly submit to EPA in detail the reasons for that belief. EPA, in its discretion, may remove the substance from the rule(s) for good cause (40 CFR 712.30 and 716.105). When withdrawing a substance from the rule, EPA will issue a rule amendment for publication in the **Federal Register**.

V. Economic Analysis

A. Preliminary Assessment Information Rule

EPA estimates the PAIR reporting cost of this rule is $234,752. To calculate this figure, EPA searched the Chemical Update System (CUS) to determine the manufacturers and importers of the 24 chemicals. This search identified 115 firms manufacturing or importing the 24 chemicals at a total of 131 sites. Manufacturing and or importing sites were identified for all the chemicals. An unknown number of the business affected by the addition of the chemicals to the Priority List may quality as a small business as defined in 40 CFR 712.25(c). However, for this analysis it is assumed that all firms identified will report. Therefore, EPA expects 115 to generate a total of 131 reports (some sites produce more than one of the 24 chemicals).

Reporting Costs (dollars)

(a) 131 reports estimated at $941 per report = $123,271
(b) 131 sites at $851 per site = $111,481
Total Cost = $234,752
Mean cost per site = $234,752/131 sites = $1,792
Mean cost per firm = $234,752/115 firms = $2,041

Reporting Burden (hours)

(a) Rule familiarization: 18 hrs/site x 131 sites = 2,358
(b) Reporting: 16 hrs/report x 131 reports = 2,096
Total burden hours = 4,454
Average burden per site = 4,454 hours/131 sites = 34
Average burden per firm = 4,454 hours/115 firms = 39

EPA Costs (dollars)

It is estimated that the annual cost to the Federal Government will be 1.774 FTEs (or 3,690 hours annually). At an estimated $64,477 per FTE, the total of 1.774 FTEs will cost EPA $114,382.

B. Health and Safety Data Reporting Rule

EPA estimates the total reporting costs for establishing section 8(d) reporting requirements for 12 chemicals will be $68,630. This cost estimate is high because the Agency is uncertain about the likely number of respondents to the rule. Although EPA has used the best available data to make its economic projections, much of the information is based upon the 1986 TSCA Inventory Update and secondary information from industry sources. Therefore, EPA tends to overestimate rather than underestimate reporting burden.

The estimated reporting costs are broken down as follows:

Initial corporate review	$ 18,217
Site identification	7,626
File searches at site	17,289
Photocopying existing studies	2,589
Title listing	790
Managerial review for CBI	15,534
Reporting on newly-initiated studies	324
Submissions after initial reporting period	5,931.36
Total	$ 68,630

Reporting Burden (hours)

(a) Initial review: 2 hours/firm x 15 firms = 30 hrs

(b) Reporting: 10.26 hours/firm x 15 firms = 154 hrs

Total reporting burden hours = 184 hrs

VI. Rulemaking Record

The following documents constitute the record for this rule (docket control number OPPTS–82046). All of these documents are available to the public in the TSCA Nonconfidential Information Center (NCIC), formerly the TSCA Public Docket Office, from 12 noon to 4 p.m., Monday through Friday, excluding legal holidays. The NCIC is located at EPA Headquarters, Rm. NE–B607, 401 M St., SW., Washington, DC 20460.

1. This final rule.
2. The economic analysis for this rule.
3. The Thirty-fifth Report of the ITC.

VII. Regulatory Assessment Requirements

A. Executive Order 12866

Under Executive Order l2866 (58 FR 51735, October 4, 1993), the Agency must determine whether the regulatory action is ''significant'' and therefore subject to review by the Office of Management and Budget (OMB) and the requirements of the Executive Order. Under section 3(f), the order defines a ''significant regulatory action'' as an action that is likely to result in a rule (1) having an annual effect on the economy of $100 million or more, or adversely and materially affecting a sector of the economy, productivity, competition, jobs, the environment, public health or safety, or State, local or tribal governments of communities (also referred to as ''economically significant''); (2) creating serious inconsistency or otherwise interfering with an action taken or planned by another agency; (3) materially altering the budgetary impacts of entitlement, grants, user fees, or loan programs or the rights and obligations of recipients thereof; or (4) raising novel legal or policy issues arising out of legal mandates, the President's priorities, or the principles set forth in this Executive Order.

Pursuant to the terms of this Executive Order, it has been determined that this rule is not ''significant'' and is therefore not subject to OMB review.

B. Paperwork Reduction Act

The information collection requirements contained in this rule have been approved by OMB under the provisions of the Paperwork Reduction Act of 1980, 44 U.S.C. 3501 *et seq.* and have been assigned OMB control numbers 2070–0054 for PAIR reporting and 2070–0004 for TSCA section 8(d) reporting.

Public reporting burden for this collection of information is estimated to average 34 hours for PAIR per response and 5 hours per response for section 8(d), including time for reviewing instructions, searching existing data sources, gathering and maintaining the data needed, and completing and reviewing the collection of information.

Send comments regarding the burden estimate or any other aspect of this collection of information, including suggestions for reducing this burden, to Chief, Information Policy Branch, 2131, U.S. Environmental Protection Agency, 401 M St., SW., Washington, DC 20460; and to the Office of Information and Regulatory Affairs, Office of Management and Budget, Washington, DC 20503, marked ''Attention: Desk Officer for EPA.''

List of Subjects in 40 CFR Parts 712 and 716

Environmental protection, Chemicals, Hazardous substances, Health and safety data, Recordkeeping and reporting requirements.

Dated: June 26, 1995.

Charles M. Auer,

Director, Chemical Control Division, Office of Pollution Prevention and Toxics.

Therefore, 40 CFR Chapter I is amended as follows:

PART 712—[AMENDED]

2. In part 712:

a. The authority citation for part 712 continues to read as follows:

Authority: 15 U.S.C. 2607(a).

b. Section 712.30(e) is amended by adding 24 chemicals in CAS number sequence, to the category ''OSHA Chemicals in Need of Dermal Absorption Testing,'' to read as follows:

§ 712.30 Chemical lists and reporting periods.

* * * * *

(e) * * *

CAS No.	Substance	Effective date	Reporting date
	* * * * * * *		
OSHA Chemicals in Need of Dermal Absorption Testing			
	* * * * * * *		
75-05-8	Acetonitrile	8/4/95	10/3/95
	* * * * * * *		
75-12-7	Formamide	8/4/95	10/3/95

CAS No.	Substance	Effective date	Reporting date
	* * * * * * *		
75-35-4	Vinylidene chloride	8/4/95	10/3/95
	* * * * * * *		
77-73-6	Dicyclopentadiene	8/4/95	10/3/95
	* * * * * * *		
78-59-1	Isophorone	8/4/95	8/4/95
78-83-1	Isobutyl alcohol	8/4/95	8/4/95
	* * * * * * *		
78-87-5	Propylene dichloride	8/4/95	10/3/95
	* * * * * * *		
91-20-3	Naphthalene	8/4/95	10/3/95
	* * * * * * *		
92-52-4	Biphenyl	8/4/95	10/3/95
	* * * * * * *		
95-50-1	o-Dichlorobenzene	8/4/95	10/3/95
	* * * * * * *		
96-18-4	1,2,3-Trichloropropane	8/4/95	10/3/95
	* * * * * * *		
98-29-3	t-Butylcatechol	8/4/95	10/3/95
	* * * * * * *		
99-08-1	m-Nitrotoluene	8/4/95	10/3/95
	* * * * * * *		
99-99-0	p-Nitrotoluene	8/4/95	10/3/95
	* * * * * * *		
106-46-7	p-Dichlorobenzene	8/4/95	10/3/95
	* * * * * * *		
107-06-2	Ethylene dichloride	8/4/95	10/3/95
	* * * * * * *		
108-93-0	Cyclohexanol	8/4/95	10/3/95
	* * * * * * *		
110-12-3	Methyl isoamyl ketone	8/4/95	10/3/95
	* * * * * * *		
120-80-9	Catechol	8/4/95	10/3/95
	* * * * * * *		
121-69-7	Dimethylaniline	8/4/95	10/3/95
	* * * * * * *		
123-42-2	Diacetone alcohol	8/4/95	10/3/95

CAS No.	Substance	Effective date	Reporting date
* * * * * * *			
127-19-5	Dimethyl acetamide	8/4/95	10/3/95
* * * * * * *			
542-92-7	Cyclopentadiene	8/4/95	10/3/95
* * * * * * *			
34590-94-8	Dipropylene glycol methyl ether	8/4/95	10/3/95
* * * * * * *			

PART 716—[AMENDED]

2. In part 716:

a. The authority citation for part 716 continues to read as follows:

Authority: 15 U.S.C. 2607(d).

b. Section 716.20 is amended by adding paragraph (b)(4) to read as follows:

§ 716.20 Studies not subject to the reporting requirements.

* * * * *

(b) * * *

(4) For the chemicals listed at § 716.120 with a special exemption referencing this paragraph, studies on mixtures containing the listed substance at levels below 1 percent of the mixture, except when a purpose of the study includes the investigation of the effects of the listed substance at levels below 1 percent.

c. Section 716.120(d) is amended by adding 12 chemicals alphabetically to the category ''OSHA Chemicals in Need of Dermal Absorption Testing.''

§ 716.120 Substances and listed mixtures to which this subpart applies.

* * * * *

(d) * * *

CAS No.	Substance	Special exemptions	Effective date	Sunset date
* * * * * * *				
OSHA Chemicals in Need of Dermal Absorption Testing				
t-Butylcatechol	98-29-3	§ 716.20(b)(3) and (b)(4) apply	8/4/95	8/4/05
* * * * * * *				
Catechol	120-80-9	§ 716.20(b)(3) and (b)(4) apply	8/4/95	8/4/05
Cyclohexanol	108-93-0	§ 716.20(b)(3) and (b)(4) apply	8/4/95	8/4/05
* * * * * * *				
Cyclopentadiene	542-92-7	§ 716.20(b)(3) and (b)(4) apply	8/4/95	8/4/05
* * * * * * *				
Diacetone alcohol	123-42-2	§ 716.20(b)(3) and (b)(4) apply	8/4/95	8/4/05

CAS No.	Substance	Special exemptions	Effective date	Sunset date
* * * * * * *				
Dicylcopentadiene	77-73-6	§ 716.20(b)(3) and (b)(4) apply	8/4/95	8/4/05
Dimethyl acetamide	127-19-5	§ 716.20(b)(3) and (b)(4) apply	8/4/95	8/4/05
* * * * * * *				
Dimethylaniline	121-69-7	§ 716.20(b)(3) and (b)(4) apply	8/4/95	8/4/05
Methyl isoamyl ketone	110-12-3	§ 716.20(b)(3) and (b)(4) apply	8/4/95	8/4/05
m-Nitrotoluene	99-08-1	§ 716.20(b)(3) and (b)(4) apply	8/4/95	8/4/05
p-Nitrotoluene	99-99-0	§ 716.20(b)(3) and (b)(4) apply	8/4/95	8/4/05
Vinylidene chloride	75-35-4	§ 716.20(b)(3) and (b)(4) apply	8/4/95	8/4/05
* * * * * * *				

[FR Doc. 95–16425 Filed 7–3–95; 8:45 am]
BILLING CODE 6560–50–F

DEPARTMENT OF HEALTH AND HUMAN SERVICES

Health Care Financing Administration

42 CFR Part 417

[OMC–022–F]

Full Reporting by Health Maintenance Organizations (HMOs) and Competitive Medical Plans (CMPs) Paid on a Cost Basis

AGENCY: Health Care Financing Administration (HCFA), HHS.

ACTION: Final rule.

SUMMARY: This rule affects HMOs and CMPs that contract with HCFA to furnish services to Medicare beneficiaries and be paid on a cost basis. It requires a cost HMO or CMP to include in its cost report the costs of hospital and skilled nursing facility (SNF) services even if it has elected (under § 417.532(c) of the HCFA regulations) to have HCFA's intermediary process those claims and pay the hospital or SNF directly.

This change is necessary so that HCFA can determine and compare the cost of all services furnished by HMOs and CMPs with the cost of equivalent services paid for under the fee-for-service system.

This rule also adds a definition and makes technical changes to clarify and update certain related provisions of subparts O and U of part 417 of the HCFA rules.

DATES: Effective Date: This rule is effective August 4, 1995.

FOR FURTHER INFORMATION CONTACT: Alfred D'Alberto, (410) 966–7610.

SUPPLEMENTARY INFORMATION:

I. Notice of Proposed Rulemaking

On February 22, 1994, we published a proposed rule (at 59 FR 8435) that would establish—

- Presumptive limits on Medicare payments to cost HMOs and CMPs and to health care prepayment plans (HCPPs) that furnish inpatient hospital services;
- An exception process under which an affected HMO, CMP or HCPP could demonstrate that payment above the presumptive limit is justified as ''reasonable'' because of the special needs of its Medicare enrollees, or because of extraordinary circumstances beyond its control; and
- Criteria for the ''reasonableness'' of the costs of HCPPs that do not furnish inpatient hospital services.

The rule also proposed to require cost HMOs and CMPs to include in their cost reports the costs of hospital and SNF services that the HMO or CMP elects to have paid by the Medicare intermediary, and to make a number of technical changes.

Under this election, although HCFA intermediaries process and pay claims, the HMO or CMP authorizes the services and retains responsibility for coordinating those services with other services it furnishes to Medicare enrollees.

Although section 1876(b)(4)(A) of the Act requires that the HMO or CMP report its ''per capita incurred cost'', HMOs and CMPs currently report only the deductibles and coinsurance they incur for the hospital and SNF services and not the full costs paid directly by the Medicare intermediary.

II. Public Comments

We received 60 letters of comment on the February 22 proposals. Seven of those letters commented on the full reporting and one on the technical changes. Careful consideration of the bulk of the comments and of the very complex exception process will delay publication of a final rule on payment limits. We have, therefore, separated those portions of the proposal that pertain to full reporting and technical changes, which need not be subjected to that delay. Those comments are discussed under part III of this preamble.

III. Discussion of Comments

A. Full Reporting

This new requirement applies only to HMOs and CMPs, because HCFA contracts with HCPPs cover only Part B services, not provider services.

Comment: All seven commenters recommended that full reporting not be required or that implementation be delayed. They expressed concern about—

- Obtaining from HCFA and its intermediaries complete and adequate information on a timely basis;
- The additional time, staff, and systems enhancement that would be required;
- The need to reimburse the HMO or CMP for these additional administrative costs.

They noted specifically the need to—

- Relate HCFA data to plan data so as to match beneficiary number, date of service, place of service and deductible and coinsurance;
- Summarize deductible and coinsurance amounts;
- Identify beneficiary status in terms of institutionalized, Medicaid-eligible, or ESRD;
- Estimate the value of incurred but not reported claims.

One commenter specifically objected to having intermediary-paid part A costs included because administrative and general (A & G) costs attributed to those services are not reimbursable to cost HMOs and CMPs.

One commenter asked whether we would expect them to include items that are not considered in the DRG computations, and if so, where they would get the data.

Response: We are providing lead time before the full reporting requirement goes into effect. During that time, we will be working to achieve the most efficient, least burdensome procedures for handling the data. Comments and recommendations from HMOs and CMPs can be useful for improving HCFA reports and minimizing systems problems. The additional administrative costs incurred because of full reporting are allowable.

We recognize that, under full reporting, there may be some reduction in payments to HMOs and CMPs. This reduction would involve service-related A & G costs only, and only a small percentage of these costs. Service-related A & G costs are generally allocated on the basis of direct identification, functional allocation, or pooling. To the extent service-related A & G costs cannot be allocated to a specific service, they are allocated to services based upon a given service's percentage of the total service costs included on the HMO's or CMP's cost report. It is this small portion of A & G costs that could be affected by full cost reporting. The inclusion of hospital and SNF services in the cost report would result in a larger portion of this category of pool A & G costs being allocated to those services. This, in turn, would result in lower payment, because the amount already paid directly to a hospital or SNF for the services they provide would constitute payment in full for those services, and any pool A & G costs allocated to those services would be disallowed. Because the portion of service-related A & G costs that could be affected in this manner is small, however, we do not anticipate that there would be a significant reduction in payments to the HMO or CMP.

With respect to the last question noted above, we would expect the report to reflect the full cost incurred by the hospital or SNF, including such things as day and cost outliers, pass throughs, graduate medical education, etc. Part of our effort during the lead time will be to ensure that we can provide accurate information on these as well as other pertinent costs.

The fact is that, without full reporting, there is no way to determine the full actual cost of services furnished by cost HMOs and CMPs and how that cost compares with the cost of the same services furnished under the fee-for-service system.

Comment: Two commenters contended that full reporting is in conflict with generally accepted accounting principles (GAAP) and with certain statements of the Financial Accounting Standards Board (the Board).

Noted as an Example: When the intermediary pays a provider, for the HMO or CMP there is no inflow or outflow of assets.

Accordingly, the transaction does not meet the Board's definition of revenue and expense.

Response: The basic rule is that HCFA pays the HMO or CMP all the allowable costs it incurs to furnish covered services to its Medicare enrollees. By law and under the contract, the HMO or CMP is required to provide or arrange for all Medicare-covered services that are generally available in the area it serves. The fact that the HMO or the CMP elects to have HCFA process and pay provider claims does not—

- Relieve it of the responsibility for furnishing provider services when necessary and appropriate; or
- Change the fact that the sums paid by the intermediary are part of the cost of providing Medicare services through an HMO or CMP.

Comment: One commenter argued that full reporting was not supported by current laws and regulations, and others contended that the amounts referred to in section 1876(b)(2) (A) and (B) of the Act and the implementing regulations (§ 417.532(g) of the HCFA rules) are in fact an actuarial projection of the average cost of Medicare covered services, and an actuarial value of the intermediary's payments.

Response: We find support for the requirement in the following provisions of the statute and regulations:

a. Section 1876(h)(4) of the Act provides that under a cost contract, the Secretary must require the HMO or CMP to report ''* * * its per capita incurred cost * * * for providing services described in subsection (a)(1) * * *'' (The services referred to in (a)(1) are all the covered services available to Medicare beneficiaries in the area served by the HMO or CMP.)

b. Section 1876(h)(2)(A) allows the HMO or CMP to elect to have HCFA pay for provider services. Section 1876(h)(2)(B) provides that the amounts paid under the election shall be deducted from the payment that would otherwise be made to the HMO or CMP * * * for the allowable costs of all Medicare-covered services.

These statutory provisions are reflected in § 417.532 of the regulations. The distinction between actuarial values and actual payment amounts is clear from a comparison between § 417.532(c)(3) and § 417.532(g). The first provides for deducting, from the reasonable cost actually incurred by the HMO or CMP, ''an *amount* equal to the

actuarial value * * * of *deductible* and *coinsurance* amounts that would have applied * * * if these enrollees had not enrolled in this or another HMO or CMP.''

Section 417.532(g) states, in part, that ''HCFA will deduct these *payments* * * * in computing the payments to the HMO or CMP''.

Over the years there have been discussions about how to handle these payments within the Medicare program budgeting. There has never been any doubt that these are actual payment amounts and not actuarial representations.

Comment: Two commenters considered that the current cost report form is not adequate for full reporting.

Response: As noted above, we want to ensure the most efficient and least burdensome procedures for full reporting. This will probably require changes in the form, to be worked out during the lead time.

Comment: One commenter thought that including intermediary payments in the cost report might require the auditor that certifies the report to extend its testing procedures to include the intermediaries.

Response: This will not be necessary. The auditor will certify that the amounts reported as paid by the intermediary are part of the HMO's or CMP's incurred costs.

B. Technical Amendments

1. *Comment:* Three commenters inferred, from our proposed revision of § 417.800(c), that we intended to change our current policy of paying 100 percent of reasonable costs for services for which beneficiaries are not liable for coinsurance.

Response: That was not our intent. We have revised paragraph (c)(2)(ii) to clearly state that coinsurance is deducted only for services that are subject to coinsurance.

2. *Other changes.* We have incorporated the proposed definition of ''furnished'', and removed obsolete provisions that applied only to contract periods that began before January 1986.

C. Changes in the Regulations

1. *Definitions.* In § 417.1, we added a definition of ''furnished'' to make clear that, in part 417, the term means made a available by the HMO, CMP, or HCPP either directly or under arrangements it makes with other entities.

2. *Full reporting.* We have amended § 417.576 to make clear that the incurred per capita costs in the cost report must include the costs paid by the Medicare intermediary.

3. *Deductions from HCPP reasonable costs.* In § 417.800, we have revised paragraph (c)(2) to make clear that the 20 percent deduction from the reasonable costs incurred by the HCPP applies only to services that are subject to coinsurance.

4. *Obsolete provisions.* We have removed the following paragraphs and sections that applied to contract periods that began before January 1986:

- Paragraph (b) of § 417.546 (Physician services and other Part B services furnished under arrangements), and the Editorial note at the end of the section.
- Paragraph (d)(2) of § 417.560 (Apportionment: Part B physician and supplier services).
- All of § 417.562 (Weighting of direct services furnished by physicians and other practitioners).

D. Other Required Information

1. Information Collection Requirements

Section 417.576 requires ''full reporting'' as discussed under part D of this preamble. This requirement is subject to review by the Office of Management and Budget under the Paperwork Reduction Act of 1980, and has been submitted for their review. The time required for compiling and processing the information and completing the report with the additional costs is estimated to be 180 hours per year.

2. Regulatory Impact Statement

Consistent with the Regulatory Flexibility Act (RFA) (5 U.S.C. 601 through 612), we prepare a regulatory flexibility analysis unless the Secretary certifies that a rule will not have a significant economic impact on a substantial number of small entities. We consider all HMOs and CMPs that contract with us to furnish services to Medicare beneficiaries on a cost basis to be small entities.

In addition, under section 1102(b) of the Act, the Secretary is required to prepare a regulatory impact analysis if a rule may have a significant impact on the operation of a substantial number of small rural hospitals. This analysis must conform to the provisions of section 604 of the RFA. For purposes of section 1102(b) of the Act, we define small rural hospital as a hospital that has fewer than 50 beds and is not located in a Metropolitan Statistical Area.

This final rule requires HMOs and CMPs paid on a cost basis to include in their cost reports the costs of hospital and SNF services even if a Medicare intermediary processes those claims and makes payments directly to the hospital or SNF. There are approximately 25 HMOs and CMPs that have elected to have the Medicare intermediaries pay for these services. As noted earlier in this preamble, we believe that payments to these HMOs and CMPs will not be reduced significantly because of the statutory limits on the A & G costs related to inpatient hospital and SNF care paid by Medicare intermediaries.

The lead time before implementation of the full reporting requirement will enable HCFA and the affected HMOs and CMPs to work out the most efficient, least burdensome, procedures for handling these additional data. The additional costs incurred by the HMOs and CMPs for full reporting are allowable costs.

We have not prepared a regulatory flexibility analysis because we have determined, and the Secretary certifies that this final rule will not have a significant economic impact on a substantial number of small entities or a significant impact on the operations of a substantial number of small rural hospitals.

In accordance with the provisions of Executive Order 12866, this regulation was not reviewed by the Office of Management and Budget.

List of Subjects in 42 CFR Part 417

Administrative practice and procedure, Grant programs—health, Health care, Health facilities, Health insurance, Health maintenance organizations (HMO), Loan programs—health, Medicare, Reporting and recordkeeping requirements.

42 CFR part 417 is amended as set forth below.

1. The authority citation for part 417 continues to read as follows:

Authority: Secs. 1102 and 1871 of the Social Security Act (42 U.S.C. 1302 and 1395hh), secs. 1301, 1306, and 1310 of the Public Health Service Act (42 U.S.C. 300e, 300e–5, and 300e–9) and 31 U.S.C. 9701.

2. In § 417.1, the following definition is added, in alphabetical order:

* * * * *

Furnished, when used in connection with prepaid health care services, means services that are made available to an enrollee either directly by, or under arrangements made by, the HMO, CMP, or HCPP.

* * * * *

§ 417.546 [Amended]

3. In § 417.546, the following changes are made:

a. Paragraph (b) and the Editorial note are removed.

b. In paragraph (a), the ''(a)'' designation is removed, and the ''(1)''

and (''2'') designations are changed to ''(a)'' and ''(b)'', respectively.

§ 417.560 [Amended]

4. In § 417.560, the following changes are made:

a. Paragraph (d)(2) is removed.

b. In paragraph (d)(1), the designation ''(1)'', and the clause ''Except as provided in paragraph (d)(2) of this section,'' are removed, and the word ''the'', preceding ''Medicare share'' is revised to read ''The''.

§ 417.562 [Removed]

5. § 417.562 is removed.

6. In § 417.576, paragraph (b)(2)(i) is revised to read as follows:

§ 417.576 Final settlement.

* * * * *

(b) * * *

(2) *Content of cost report.* The cost report and supporting documents must include the following:

(i) The per capita costs incurred in furnishing covered services to its Medicare enrollees, determined in accordance with subpart O of this part and including—

(A) The costs incurred by entities related to the HMO or CMP by common ownership or control; and

(B) For reports for cost-reporting periods that begin on or after January 1, 1996, the costs of hospital and SNF services paid by Medicare's intermediaries under the option provided by § 417.532(d).

* * * * *

7. § 417.800 is amended to revise the heading and paragraph (c)(2) to read as follows:

§ 417.800 Payment to HCPPs: Definitions and basic rules.

* * * * *

(c) *Payment of reasonable cost.* * * *

(2) *Payment for Part B services: Basic rules*—(i) *Cost basis payment.* Except as provided in paragraph (d) of this section, HCFA pays an HCPP on the basis of the reasonable costs it incurs, as specified in subpart O of this part, for the covered Part B services furnished to its Medicare enrollees.

(ii) *Deductions.* In determining the amount due an HCPP for covered Part B services furnished to its Medicare enrollees, HCFA deducts, from the reasonable cost actually incurred by the HCPP, the following:

(A) The actuarial value of the Part B deductible.

(B) An amount equal to 20 percent of the cost incurred for any service that is subject to the Medicare coinsurance.

(Catalog of Federal Domestic Assistance Program No. 93.773, Medicare—Hospital Insurance; and Program No. 93.774, Medicare—Supplementary Medical Insurance Program)

Dated: April 20, 1995.

Bruce C. Vladeck,

Administrator, Health Care Financing Administration.

Dated: June 19, 1995.

Donna E. Shalala,

Secretary.

[FR Doc. 95–16411 Filed 7–3–95; 8:45 am]

BILLING CODE 4120–01–P

FEDERAL EMERGENCY MANAGEMENT AGENCY

44 CFR Part 65

Changes in Flood Elevation Determinations

AGENCY: Federal Emergency Management Agency, FEMA.

ACTION: Final rule.

SUMMARY: Modified base flood elevations are finalized for the communities listed below. These modified elevations will be used to calculate flood insurance premium rates for new buildings and their contents.

EFFECTIVE DATES: The effective dates for these modified base flood elevations are indicated on the following table and revise the Flood Insurance Rate Map(s) (FIRMs) in effect for each listed community prior to this date.

ADDRESSES: The modified base flood elevations for each community are available for inspection at the office of the Chief Executive Officer of each community. The respective addresses are listed in the following table.

FOR FURTHER INFORMATION CONTACT: Michael K. Buckley, P.E., Chief, Hazard Identification Branch, Mitigation Directorate, 500 C Street, SW., Washington, DC 20472, (202) 646–2756.

SUPPLEMENTARY INFORMATION: The Federal Emergency Management Agency makes the final determinations listed below of modified base flood elevations for each community listed. These modified elevations have been published in newspapers of local circulation and ninety (90) days have elapsed since that publication. The Associate Director has resolved any appeals resulting from this notification.

The modified base (100-year) flood elevations are not listed for each community in this notice. However, this rule includes the address of the Chief Executive Officer of the community where the modified base flood elevation determinations are available for inspection.

The modifications are made pursuant to section 206 of the Flood Disaster Protection Act of 1973, 42 U.S.C. 4105, and are in accordance with the National Flood Insurance Act of 1968, 42 U.S.C. 4001 et seq., and with 44 CFR part 65.

For rating purposes, the currently effective community number is shown and must be used for all new policies and renewals.

The modified base (100-year) flood elevations are the basis for the floodplain management measures that the community is required to either adopt or to show evidence of being already in effect in order to qualify or to remain qualified for participation in the National Flood Insurance Program.

These modified elevations, together with the floodplain management criteria required by 44 CFR 60.3, are the minimum that are required. They should not be construed to mean that the community must change any existing ordinances that are more stringent in their floodplain management requirements. The community may at any time enact stricter requirements of its own, or pursuant to policies established by other Federal, state or regional entities.

These modified elevations are used to meet the floodplain management requirements of the NFIP and are also used to calculate the appropriate flood insurance premium rates for new buildings built after these elevations are made final, and for the contents in these buildings.

The changes in base flood elevations are in accordance with 44 CFR 65.4.

National Environmental Policy Act. This rule is categorically excluded from the requirements of 44 CFR Part 10, Environmental Consideration. No environmental impact assessment has been prepared.

Regulatory Flexibility Act. The Associate Director, Mitigation Directorate, certifies that this rule is exempt from the requirements of the Regulatory Flexibility Act because modified base flood elevations are required by the Flood Disaster Protection Act of 1973, 42 U.S.C. 4105, and are required to maintain community eligibility in the National Flood Insurance Program. No regulatory flexibility analysis has been prepared.

Regulatory Classification. This final rule is not a significant regulatory action under the criteria of section 3(f) of Executive Order 12866 of September 30, 1993, Regulatory Planning and Review, 58 FR 51735.

Executive Order 12612, Federalism. This rule involves no policies that have federalism implications under Executive

Order 12612, Federalism, dated October 26, 1987.

Executive Order 12778, Civil Justice Reform. This rule meets the applicable standards of section 2(b)(2) of Executive Order 12778.

List of Subjects in 44 CFR Part 65

Flood insurance, Floodplains, Reporting and recordkeeping requirements.

Accordingly, 44 CFR part 65 is amended to read as follows:

PART 65—[AMENDED]

1. The authority citation for part 65 continues to read as follows:

Authority: 42 U.S.C. 4001 et seq.; Reorganization Plan No. 3 of 1978, 3 CFR, 1978 Comp., p. 329; E.O. 12127, 44 FR 19367, 3 CFR, 1979 Comp., p. 376.

§ 65.4 [Amended]

2. The tables published under the authority of § 65.4 are amended as follows:

State and county	Location	Dates and name of newspaper where notice was published	Chief executive officer of community	Effective date of modification	Community No.
Alabama: Tuscaloosa County (FEMA Docket No. 7123).	City of Tuscaloosa	Nov. 25, 1994, Dec. 2, 1994, *The Tuscaloosa News*.	The Honorable Alvin P. DuPont, Mayor of the City of Tuscaloosa, P.O. Box 2089, Tuscaloosa, Alabama 35403.	Nov. 16, 1994	010203
Connecticut: Fairfield County (FEMA Docket No. 7123).	City of Stamford	Oct. 19, 1994, Oct. 26, 1994, *Stamford Advocate*.	The Honorable Stanley Esposito, Mayor of the City of Stamford, 888 Washington Boulevard, Stamford, Connecticut 06904–2152.	Sept. 30, 1994	090015 D
Florida: Collier County (FEMA Docket No. 7123).	Unincorporated Areas .	Oct. 28, 1994, Nov. 4, 1994, *Naples Daily News*.	Mr. Timothy Constantine, Chairman of the Collier County Commissioners, 3301 Tamiami Trail East, Building F, Naples, Florida 33962.	Oct. 21, 1994	120067 E
Georgia: Gwinnett County (FEMA Docket No. 7123).	Unincorporated Areas .	Sept. 1, 1994, Sept. 8, 1994, *The Atlanta Journal-Constitution*.	Mr. Wayne Hill, Chairman of the Gwinnett County Board of Commissioners, 75 Langley Drive, Lawrenceville, Georgia 30245–6900.	Aug. 25, 1994	130322 C
Indiana: Boone County (FEMA Docket No. 7123).	City of Lebanon	Oct. 11, 1994, Oct. 18, 1994, *The Reporter*.	The Honorable James Acton, Mayor of the City of Lebanon, 201 East Main Street, Lebanon, Indiana 46052.	Oct. 3, 1994	180013 C
Wisconsin: Dane County (FEMA Docket No. 7123).	City of Madison	Dec. 2, 1994, Dec. 9, 1994, *The Capital Times*.	The Honorable Paul Soglin, Mayor of the City of Madison, City-County Building, Room 403, 210 Martin Luther King, Jr. Boulevard, Madison, Wisconsin 53710.	Nov. 23, 1994	550083

(Catalog of Federal Domestic Assistance No. 83.100, ''Flood Insurance.'')

Dated: June 22, 1995.

Richard T. Moore,

Associate Director for Mitigation.

[FR Doc. 95–16413 Filed 7–3–95; 8:45 am]

BILLING CODE 6718–03–P

44 CFR Part 65

[Docket No. FEMA–7137]

Changes in Flood Elevation Determinations

AGENCY: Federal Emergency Management Agency, FEMA.

ACTION: Interim rule.

SUMMARY: This interim rule lists communities where modification of the base flood elevations is appropriate because of new scientific or technical data. New flood insurance premium rates will be calculated from the modified base flood elevations for new buildings and their contents.

DATES: These modified base flood elevations are currently in effect on the dates listed in the table and revise the Flood Insurance Rate Map(s) (FIRMs) in effect prior to this determination for each listed community.

From the date of the second publication of these changes in a newspaper of local circulation, any person has ninety (90) days in which to request through the community that the Associate Director reconsider the changes. The modified elevations may be changed during the 90-day period.

ADDRESSES: The modified base flood elevations for each community are available for inspection at the office of the Chief Executive Officer of each community. The respective addresses are listed in the following table.

FOR FURTHER INFORMATION CONTACT: Michael K. Buckley, P.E., Chief, Hazard Identification Branch, Mitigation Directorate, 500 C Street, SW., Washington, DC 20472, (202) 646–2756.

SUPPLEMENTARY INFORMATION: The modified base flood elevations are not

listed for each community in this interim rule. However, the address of the Chief Executive Officer of the community where the modified base flood elevation determinations are available for inspection is provided.

Any request for reconsideration must be based upon knowledge of changed conditions, or upon new scientific or technical data.

The modifications are made pursuant to section 201 of the Flood Disaster Protection Act of 1973, 42 U.S.C. 4105, and are in accordance with the National Flood Insurance Act of 1968, 42 U.S.C. 4001 et seq., and with 44 CFR part 65.

For rating purposes, the currently effective community number is shown and must be used for all new policies and renewals.

The modified base flood elevations are the basis for the floodplain management measures that the community is required to either adopt or to show evidence of being already in effect in order to qualify or to remain qualified for participation in the National Flood Insurance Program.

These modified elevations, together with the floodplain management criteria required by 44 CFR 60.3, are the minimum that are required. They should not be construed to mean that the community must change any existing ordinances that are more stringent in their floodplain management requirements. The community may at any time enact stricter requirements of its own, or pursuant to policies established by other Federal, state or regional entities.

The changes in base flood elevations are in accordance with 44 CFR 65.4.

National Environmental Policy Act. This rule is categorically excluded from the requirements of 44 CFR Part 10, Environmental Consideration. No environmental impact assessment has been prepared.

Regulatory Flexibility Act. The Associate Director, Mitigation Directorate, certifies that this rule is exempt from the requirements of the Regulatory Flexibility Act because modified base flood elevations are required by the Flood Disaster Protection Act of 1973, 42 U.S.C. 4105, and are required to maintain community eligibility in the National Flood Insurance Program. No regulatory flexibility analysis has been prepared.

Regulatory Classification. This interim rule is not a significant regulatory action under the criteria of section 3(f) of Executive Order 12866 of September 30, 1993, Regulatory Planning and Review, 58 FR 51735.

Executive Order 12612, Federalism. This rule involves no policies that have federalism implications under Executive Order 12612, Federalism, dated October 26, 1987.

Executive Order 12778, Civil Justice Reform. This rule meets the applicable standards of section 2(b)(2) of Executive Order 12778.

List of Subjects in 44 CFR Part 65

Flood insurance, Floodplains, Reporting and recordkeeping requirements.

Accordingly, 44 CFR part 65 is amended to read as follows:

PART 65—[AMENDED]

1. The authority citation for part 65 continues to read as follows:

Authority: 42 U.S.C. 4001 et seq.; Reorganization Plan No. 3 of 1978, 3 CFR, 1978 Comp., p. 329; E.O. 12127, 44 FR 19367, 3 CFR, 1979 Comp., p. 376.

§ 65.4 [Amended]

2. The tables published under the authority of § 65.4 are amended as follows:

State and county	Location	Dates and name of newspaper where notice was published	Chief executive officer of community	Effective date of modification	Community No.
Alabama:					
Jefferson County ..	City of Hoover	Mar. 31, 1995, Apr. 7, 1995, *The Birmingham News.*	The Honorable Frank S. Skinner, Jr., Mayor of the City of Hoover, 100 Municipal Drive, P.O. Box 360628, Hoover, Alabama 35236–0628.	Mar. 24, 1995	010123
Tuscaloosa County	City of Tuscaloosa	Mar. 31, 1995, Apr. 7, 1995, *Tuscaloosa News.*	The Honorable Alvin P. Dupont, Mayor of the City of Tuscaloosa, P.O. Box 2089, Tuscaloosa, Alabama 35403.	June 3, 1995	010203 B
Connecticut: Hartford County.	City of New Britain	Apr. 6, 1995, Apr. 13, 1995, *The Herald.*	The Honorable Linda A. Blogoslawski, Mayor of the City of New Britain, 27 West Main Street, New Britain, Connecticut 06051.	Sept. 30, 1995	090032 B
Florida: Broward ..... County	Town of Hillsboro Beach.	Mar. 23, 1995, Mar. 30, 1995, *Sun Sentinel.*	The Honorable Howard Sussman, Mayor of the Town of Hillsboro Beach, 1210 Hillsboro Mile, Hillsboro Beach, Florida 33062.	Mar. 10, 1995	120040 F
Georgia: Muscogee County.	City of Columbus	Apr. 10, 1995, Apr. 17, 1995, *Columbus Ledger-Enquirer.*	The Honorable Bobby Peters, Mayor of the City of Columbus, 100 10th Street, Columbus, Georgia 31902.	Mar. 31, 1995	135158 D
Illinois:					
DuPage County	Unincorporated Areas .	Mar. 20, 1995, Mar. 27, 1995, *Chicago Tribune.*	Mr. Gayle M. Franzen, DuPage County Board Chairman, 421 North County Farm Road, Wheaton, Illinois 60187.	Mar. 15, 1995	170197 B

State and county	Location	Dates and name of newspaper where notice was published	Chief executive officer of community	Effective date of modification	Community No.
Winnebago	Village of Machesney Park.	May 10, 1995, May 17, 1995, *The Park Journal*.	Mr. Steve Kuhn, President of the Village of Machesney Park, 300 Machesney Road, Machesney Park, Illinois 61111.	May 1, 1995	171009 A
Will County	Village of Romeoville	Mar. 27, 1995, Apr. 3, 1995, *Joliet Herald News*.	Ms. Sandra Gulden, President of the Village of Romeoville, 13 Montrose Drive, Romeoville, Illinois 60441.	June 19, 1995	170711 B
Will County	Unincorporated Areas	Mar. 27, 1995, Apr. 3, 1995, *Joliet Herald News*.	Mr. Charles Adelman, Will County Executive, 302 North Chicago Street, Joliet, Illinois 60431.	June 19, 1995	170695 B
New Jersey: Monmouth	Township of Aberdeen	Apr. 24, 1995, May 1, 1995, *Asbury Park Press*.	Mr. James M. Cox, Aberdeen Township Manager, 1 Aberdeen Drive, Aberdeen, New Jersey 07707.	Apr. 17, 1995	340312 A & B
New York:					
Erie County	Town of Cheektowaga	Mar. 16, 1995, Mar. 23, 1995, *Cheektowaga Times*.	Mr. Dennis H. Gabryszak, Supervisor for the Town of Cheektowaga, 3301 Broadway Street, Cheektowaga, New York 14227–1088.	Mar. 14, 1995	360231 E
Monroe	Town of Greece	Apr. 17, 1995, May 4, 1995, *The Greece Post*.	Mr. Roger Boily, Supervisor of the Town of Greece, 2505 West Ridge Road, Rochester, New York 14626.	Apr. 21, 1995	360417 E
North Carolina:					
Dare County	Unincorporated Areas	Mar. 28, 1995, Apr. 4, 1995, *The Coastland Times*.	Mr. Robert V. Owens, Chairman of the Dare County Board of Commissioners, P.O. Box 1000, Manteo, North Carolina 27954.	Mar. 20, 1995	375348
Gaston	City of Gastonia	May 8, 1995, May 15, 1995, *The Gaston Gazette*.	The Honorable James B. Garland, Mayor of the City of Gastonia, P.O. Box 1748, Gastonia, North Carolina 28053–1748.	May 2, 1995	370100 D
Rockingham County.	City of Reidsville	Mar. 17, 1995, Mar. 24, 1995, *Reidsville Review*.	The Honorable W. Clark Turner, Mayor of the City of Reidsville, 230 West Morehead Street, Reidsville, North Carolina 27320.	Sept. 30, 1994	370209 B
Ohio: Montgomery County.	City of Centerville	Mar. 18, 1995, Mar. 25, 1995, *Centerville-Bellbrook Times*.	The Honorable Shirley Heintz, Mayor of the City of Centerville, 100 West Spring Valley Road, Centerville, Ohio 45458.	Mar. 9, 1995	390408 C
Tennessee: Hamilton County.	Unincorporated Areas	Apr. 6, 1995, Apr. 13, 1995, *The Chattanooga Free Press*.	Mr. Claude Ramsey, Hamilton County Executive, 208 County Courthouse, Fountain Square, Chattanooga, Tennessee 37402.	Sept. 30, 1995	470071

(Catalog of Federal Domestic Assistance No. 83.100, ''Flood Insurance.'')

Dated: June 22, 1995.

Richard T. Moore,

Associate Director for Mitigation.

[FR Doc. 95–16415 Filed 7–3–95; 8:45 am]

BILLING CODE 6718–03–P

44 CFR Part 67

Final Flood Elevation Determinations

AGENCY: Federal Emergency Management Agency (FEMA).

ACTION: Final rule.

SUMMARY: Base (1% annual chance) flood elevations and modified base flood elevations are made final for the communities listed below. The base flood elevations and modified base flood elevations are the basis for the floodplain management measures that each community is required either to adopt or to show evidence of being already in effect in order to qualify or remain qualified for participation in the National Flood Insurance Program (NFIP).

EFFECTIVE DATES: The date of issuance of the Flood Insurance Rate Map (FIRM) showing base flood elevations and modified base flood elevations for each community. This date may be obtained by contacting the office where the maps are available for inspection as indicated on the table below.

ADDRESSES: The final base flood elevations for each community are available for inspection at the office of the Chief Executive Officer of each community. The respective addresses are listed in the table below.

FOR FURTHER INFORMATION CONTACT: Michael K. Buckley, P.E., Chief, Hazard Identification Branch, Mitigation Directorate, 500 C Street, SW., Washington, DC 20472, (202) 646–2756.

SUPPLEMENTARY INFORMATION: The Federal Emergency Management Agency (FEMA or Agency) makes final determinations listed below of base flood elevations and modified base flood elevations for each community listed. The proposed base flood elevations and proposed modified base flood elevations were published in newspapers of local circulation and an opportunity for the community or individuals to appeal the proposed determinations to or through the community was provided for a period of ninety (90) days. The proposed base flood elevations and proposed modified base flood elevations were also published in the **Federal Register**.

This final rule is issued in accordance with section 110 of the Flood Disaster Protection Act of 1973, 42 U.S.C. 4104, and 44 CFR part 67.

The Agency has developed criteria for floodplain management in floodprone areas in accordance with 44 CFR part 60.

Interested lessees and owners of real property are encouraged to review the proof Flood Insurance Study and Flood Insurance Rate Map available at the address cited below for each community.

The base flood elevations and modified base flood elevations are made final in the communities listed below. Elevations at selected locations in each community are shown.

National Environmental Policy Act

This rule is categorically excluded from the requirements of 44 CFR Part 10, Environmental Consideration. No environmental impact assessment has been prepared.

Regulatory Flexibility Act

The Associate Director, Mitigation Directorate, certifies that this rule is exempt from the requirements of the Regulatory Flexibility Act because final or modified base flood elevations are required by the Flood Disaster Protection Act of 1973, 42 U.S.C. 4104, and are required to establish and maintain community eligibility in the National Flood Insurance Program. No regulatory flexibility analysis has been prepared.

Regulatory Classification

This final rule is not a significant regulatory action under the criteria of section 3(f) of Executive Order 12866 of September 30, 1993, Regulatory Planning and Review, 58 FR 51735.

Executive Order 12612, Federalism

This rule involves no policies that have federalism implications under Executive Order 12612, Federalism, dated October 26, 1987.

Executive Order 12778, Civil Justice Reform

This rule meets the applicable standards of section 2(b)(2) of Executive Order 12778.

List of Subjects in 44 CFR Part 67

Administrative practice and procedure, Flood insurance, Reporting and recordkeeping requirements.

Accordingly, 44 CFR part 67 is amended as follows:

PART 67—[AMENDED]

1. The authority citation for part 67 continues to read as follows:

Authority: 42 U.S.C. 4001 et seq.; Reorganization Plan No. 3 of 1978, 3 CFR, 1978 Comp., p. 329; E.O. 12127, 44 FR 19367, 3 CFR, 1979 Comp., p. 376.

§ 67.11 [Amended]

2. The tables published under the authority of § 67.11 are amended as follows:

PROPOSED BASE (100-YEAR) FLOOD ELEVATIONS

Source of flooding and location	#Depth in feet above ground. *Elevation in feet (NGVD)
CONNECTICUT	
Bozrah (town), New London County (FEMA docket No. 7124)	
Yantic River:	
At downstream corporate limits	*120
Approximately 0.6 mile upstream of corporate limits	*122
Approximately 100 feet upstream of State Route 608	*165
Approximately 1,900 feet upstream of Gilman Dam	*243
Maps available for inspection at the Town Hall, Bozrah, Connecticut.	
FLORIDA	
Seminole County (unincorporated areas) (FEMA docket No. 7124)	
Mud Lake:	
Entire shoreline within county	*85
Howell Creek:	
Approximately 1,250 feet downstream of Dyson Drive	*30
Approximately 0.66 mile downstream of Red Bud Lake Road	*35
Lake Lotus:	
Entire shoreline within county	*64
Little Wekiva River:	
Approximately 200 feet upstream of State Route 431	*64
Approximately 900 feet upstream of State Route 431	*64
Soldier Creek:	
At upstream side of State Route 427	*27
Approximately 150 feet upstream of CSX Transportation	*42
Maps available for inspection at the Seminole County Development Review Department, County Services Building, Room W225, 1101 East First Street, Sanford, Florida.	
GEORGIA	
Columbia County (unincorporated areas) (FEMA docket No. 7124)	
Savannah River:	
Approximately 0.8 mile downstream of the City of Augusta dam and locks	*151
Approximately 2,500 feet downstream of J. Strom Thurmond Dam	*203
Watery Branch:	
At its mouth at the Savannah River	*192
Approximately 600 feet upstream of Point Comfort Road	*195
Jones Creek:	
At its mouth	*193
Approximately 4,200 feet upstream of its mouth	*197
Bettys Branch:	
At its mouth	*197
Approximately 0.5 mile upstream of Bettys Branch Road	*203
Uchee Creek:	
At its mouth	*198
Approximately 250 feet upstream of Washington Road	*204
Maps available for inspection at the Engineering Services, 630 Washington West Drive, Evans, Georgia.	

PROPOSED BASE (100-YEAR) FLOOD ELEVATIONS—Continued

Source of flooding and location	#Depth in feet above ground. *Elevation in feet (NGVD)
Gainesville (city), Hall County (FEMA docket No. 7116)	
Flat Creek:	
Approximately 0.24 mile upstream of Highland Terrace	*1,166
At upstream corporate limits	*1,172
Flat Creek Tributary:	
At confluence with Flat Creek	*1,171
Approximately 170 feet upstream of Pine Street	*1,195
Limestone Creek:	
At upstream side of Limestone Road	*1,088
At upstream corporate limits	*1,109
Limestone Creek Tributary:	
At confluence with Limestone Creek	*1,089
At downstream side of Brenau Lake Dam	*1,115
Maps available for inspection at the Joint Administration Building/Public Works Department, 300 Green Street, Room 302, Gainesville, Georgia.	
ILLINOIS	
Hampshire (Village), Kane County (FEMA docket No. 7124)	
Hampshire Creek:	
Approximately 0.25 mile downstream of State Street	*879
Approximately 0.59 mile upstream of Rowell Road	*906
Hampshire Creek Tributary No. 1:	
Approximately 375 feet downstream of Keyes Drive	*898
Approximately 720 feet upstream of Keyes Drive	*904
Maps available for inspection at the Village Hall, 234 South State Street, Hampshire, Connecticut.	
INDIANA	
Franklin County (unincorporated areas) (FEMA docket No. 7124)	
Whitewater River:	
At confluence of East Fork Whitewater River	*622
Approximately 800 feet upstream of confluence of Salt Creek	*680
East Fork Whitewater River:	
At confluence with Whitewater River	*622
At State Route 101	*624
Duck Creek:	
At confluence with Whitewater River	*670
At Duck Creek Road	*695
Maps available for inspection at the Courthouse, 459 Main Street, Brookville, Indiana.	
MAINE	
Auburn (city), Androscoggin County (FEMA docket No. 7124)	
Little Androscoggin River:	
Approximately 350 feet downstream of Lower Barker Mill Dam	*136
Approximately 1,000 feet upstream of the upstream corporate limits	*227
Taylor Brook:	
At the confluence with Little Androscoggin River	*197
At the downstream side of Hotel Road	*245
Taylor Pond:	
Entire shoreline within the community	*247
Bobbin Mill Brook:	
At confluence with Androscoggin River	*181
Approximately 120 feet upstream of Fair Street bridge	*254
Maps available for inspection at the Acting City Manager's Office, 45 Spring Street, Auburn, Maine.	
Skohegan (town), Somerset County (FEMA docket No. 7124)	
Kennebec River:	
At downstream corporate limits	*127
Approximately 1.6 miles upstream of the confluence of Whitten Brook	*174
Wesserunsett Stream:	
At confluence with Kennebec River	*132
Approximately 800 feet upstream of confluence with West Branch Wesserunsett Stream	*160
West Branch Wesserunsett Stream:	
At confluence with Wesserunsett Stream	*159
Approximately 1,900 feet upstream of State Route 150	*218
Cold Brook:	
At confluence with West Branch Wesserunsett Stream	*180
At confluence of Unnamed Brook	*225
Currier Brook:	
At confluence with Kennebec River	*159
On the downstream side of the most downstream crossing of Bigelow Hill Road	*224
Unnamed Brook:	
At confluence with Cold Brook	*225
Approximately 360 feet upstream of Private Drive	*267
Whitten Brook:	
At confluence with Kennebec River	*173
At downstream face of culvert near Whitten Court	*173
Kennebec River (North Channel):	
At confluence with Kennebec River	*159
At divergence from Kennebec River	*173
Maps available for inspection at the Town Office Building, Planning Department, 90 Water Street, Skohegan, Maine.	
MARYLAND	
Oakland (town), Garrett County (FEMA docket Nos. 7086 and 7124)	
Little Youghiogheny River:	
At the confluence with Youghiogheny River	*2,366
Approximately 0.4 mile upstream of confluence of Unnamed Tributary	*2,386
Bradley Run:	
At the confluence with Little Youghiogheny River	*2,371
Approximately 0.25 mile upstream of Bradley Lane	*2,399
Maps available for inspection at the City Hall, 15 South Third Street, Oakland, Maryland.	
MICHIGAN	
Montrose (township), Genesee County (FEMA docket No. 7128)	
Armstrong Creek:	
At confluence with Flint River	*626
At Frances Road	*683
Flint River:	
Approximately 3.1 miles upstream of Willard Road	*619
Approximately 3.0 miles upstream of the confluence of Armstrong Creek	*637
Maps available for inspection at the Office of the Township of Montrose, 139 South Saginaw Street, Montrose, Michigan.	
MISSISSIPPI	
Philadelphia (city), Neshoba County (FEMA docket No. 7120)	
Stream No. 1:	
Downstream corporate limits	*417
Upstream corporate limits	*438
Stream No. 2:	
Downstream corporate limits	*416
Upstream corporate limits	*440
Stream No. 3:	
Downstream corporate limits	*420
Approximately 1,100 feet upstream of State Route 19	*432
Maps available for inspection at the Building Official's Office, 525 Main Street, Philadelphia, Mississippi.	
NEW JERSEY	
Allendale (borough), Bergen County (FEMA docket No. 7116)	
Ho-Ho-Kus Brook:	
Approximately 75 feet upstream of the confluence of Allendale Brook (downstream corporate limits)	*238
Approximately 2,300 feet upstream of the confluence of Valentine Brook (upstream corporate limits)	*298
Allendale Brook:	
Approximately 850 feet downstream of New Street	*248
Upstream corporate limits (approximately 1.2 miles upstream of Franklin Turnpike)	*281
Ramsey Brook:	
At confluence with Ho-Ho-Kus Brook	*255
Approximately 550 feet upstream of Lake Side Drive	*353
Valentine Brook:	
Approximately 150 feet upstream of confluence with Ho-Ho-Kus Brook	*292
Approximately 4,800 feet upstream of Forest Drive (upstream corporate limits)	*325
Maps available for inspection at the Allendale Borough Hall, 500 West Crescent Avenue, Allendale, New Jersey.	
Alpine (borough), Bergen County (FEMA docket No. 7116)	
Hudson River:	
At upstream corporate limits	*8
At downstream corporate limits	*9

PROPOSED BASE (100-YEAR) FLOOD ELEVATIONS—Continued

Source of flooding and location	#Depth in feet above ground. *Elevation in feet (NGVD)
Maps available for inspection at the Alpine Borough Hall, 100 Church Street, Alpine, New Jersey.	
Carlstadt (borough), Bergen County (FEMA docket No. 7116)	
Newark Bay:	
At intersection of State Route 17 and Broad Street	*8
Maps available for inspection at the Borough Hall, 500 Madison Street, Carlstadt, New Jersey.	
East Rutherford (borough), Bergen County (FEMA docket No. 7116)	
Newark Bay:	
At intersection of State Route 17 and Orchard Street	*8
Maps available for inspection at the Borough Hall, 1 Everett Place, East Rutherford, New Jersey.	
Englewood Cliffs (borough), Bergen County (FEMA docket No. 7116)	
Hudson River:	
At upstream corporate limits	*9
At downstream corporate limits	*9
Maps available for inspection at the Municipal Building, 10 Kahn Terrace, Englewood Cliffs, New Jersey.	
Fair Lawn (borough), Bergen County (FEMA docket No. 7116)	
Saddle River:	
Approximately 1,750 feet downstream of Red Mill Road	*45
Approximately 300 feet downstream of the confluence of Ho-Ho-Kus Brook	*56
Maps available for inspection at the Borough of Fair Lawn, Municipal Building, 8–01 Fair Lawn Avenue, Fair Lawn, New Jersey.	
Fort Lee (borough), Bergen County (FEMA docket No. 7116)	
Hudson River:	
At upstream corporate limits	*9
At downstream corporate limits	*10
Maps available for inspection at the Code Enforcement Office, 309 Main Street, Fort Lee, New Jersey.	
Franklin Lakes (borough), Bergen County (FEMA docket No. 7116)	
Pond Brook:	
At downstream corporate limits	*326
Approximately 40 feet downstream of High Mountain Road	*326
Ho-Ho-Kus Brook:	
Downstream of Wyckoff Avenue (downstream corporate limits)	*307
Approximately 120 feet downstream of Edison Road	*311
Maps available for inspection at the Building Department, DeKorte Drive, Franklin Lakes, New Jersey.	
Glen Rock (borough), Bergen County (FEMA docket No. 7116)	
Ho-Ho-Kus Brook:	
At the confluence with Saddle River	*57
At Grove Street	*66
Saddle River:	
Approximately 1,700 feet downstream of the confluence of Ho-Ho-Kus Brook	*56
At the confluence of Ho-Ho-Kus Brook	*57
Maps available for inspection at the Borough of Glen Rock Borough Hall, Harding Plaza, Glen Brook, New Jersey.	
Hackensack (city), Bergen County (FEMA docket No. 7116)	
Coles Brook:	
At Main Street	*15
At Essex Street	*39
Maps available for inspection at the City Office, 65 Central Avenue, Hackensack, New Jersey.	
Hackensack Meadowlands District, Bergen County (FEMA docket No. 7116)	
Overpeck Creek:	
Approximately 800 feet north of intersection of Victoria Terrace and Hendricks Causeway	*7
Maps available for inspection at the HMDC Engineering Department, 1 De Korte Park Plaza, Lyndhurst, New Jersey.	
Harrington Park (borough), Bergen County (FEMA docket No. 7116)	
Oradell Reservoir:	
At upstream face of CONRAIL bridge	*26
At upstream corporate limits (approximately 0.5 mile upstream of Harrington Avenue)	*28
Maps available for inspection at the Harrington Park Borough Hall, 85 Harriot Avenue, Harrington Park, New Jersey.	
Hasbrouck Heights (borough), Bergen County (FEMA docket No. 7116)	
Newark Bay:	
Approximately 200 feet southeast of intersection of Ravine Avenue and State Route 17	*5
Maps available for inspection at the Borough Clerk's Office, 248 Hamilton Avenue, Hasbrouck Heights, New Jersey.	
Ho-Ho-Kus (borough), Bergen County (FEMA docket No. 7116)	
Saddle Brook:	
At East Saddle River Road	*92
At Mills Road	*159
Saddle River:	
Approximately 900 feet downstream of Bogert Road	*01
At a point approximately 1,350 feet upstream of Hollywood Avenue (upstream corporate limits)	*105
Maps available for inspection at the Ho-Ho-Kus Borough Hall, 333 Warren Avenue, Ho-Ho-Kus, New Jersey.	
Little Ferry (borough), Bergen County (FEMA docket No. 7116)	
Newark Bay:	
Along East Riser Ditch south of intersection of Huyler Street and U.S. Route 46	*5
Lodi (borough), Bergen County (FEMA Docket No. 7116)	
Saddle River:	
Approximately 640 feet upstream of Outwater Lane	*37
At Market Street (Essex Street)	*39
Maps available for inspection at the Lodi Municipal Building, One Memorial Drive, Lodi, New Jersey.	
Mahwah (township), Bergen County (FEMA docket No. 7116)	
Ho-Ho-Kus Brook:	
Approximately 100 feet upstream of the confluence of Valentine Brook	*293
Approximately 140 feet downstream of Edison Road	*311
Valentine Brook:	
Approximately 150 feet upstream of confluence with Ho-Ho-Kus Brook	*292
Approximately 3,800 feet upstream of Forest Drive (at the upstream corporate limits)	*321
Darlington Brook Tributary:	
Approximately 2,480 feet downstream of Shadyside Road	*329
Approximately 3,180 feet downstream of Shadyside Road	*329
Masonicus Brook:	
West side of CONRAIL at Mahwah/Ramsey corporate limits	*331
East side of CONRAIL at Mahwah/Ramsey corporate limits	*332
Maps available for inspection at the Municipal Building, 300 B Route 17 South, Mahwah, New Jersey.	
Maywood (borough), Bergen County (FEMA docket No. 7116)	
Coles Brook:	
Downstream corporate limits	*26
At Essex Street	*39
Maps available for inspection at the Borough of Maywood, 459 Maywood Avenue, Maywood, New Jersey.	
Moonachie (borough), Bergen County (FEMA docket No. 7116)	
Newark Bay:	
At intersection of West Park and Albert Streets	*9
North of intersection of Moonachie Avenue and Moonachie Road	*5
Maps available for inspection at the Municipal Building, 70 Moonachie Road, Moonachie, New Jersey.	

PROPOSED BASE (100-YEAR) FLOOD ELEVATIONS—Continued

Source of flooding and location	#Depth in feet above ground. *Elevation in feet (NGVD)
North Arlington (borough), Bergen County (FEMA docket No. 7116)	
Newark Bay:	
Approximately 800 feet east of intersection of Schuyler Avenue and Carrie Road	*9
Approximately 400 feet east of intersection of Schuyler Avenue and Eckhardt Terrace	*8
Maps available for inspection at the Borough Hall, 214 Ridge Road, North Arlington, New Jersey.	
Old Tappan (borough), Bergen County (FEMA docket No. 7116)	
Hackensack River:	
At downstream corporate limits (approximately 1,200 feet downstream of Westwood Avenue)	*26
At upstream face of Lake Tappan Dam	*56
Lake Tappan:	
Entire shoreline within community	*56
Dorotockeys Run:	
At downstream corporate limits (approximately 1,480 feet downstream of Central Avenue)	*44
Approximately 400 feet downstream of Central Avenue	*44
Maps available for inspection at the Old Tappan Borough Hall, 227 Old Tappan Road, Old Tappan, New Jersey.	
Palisades Park (borough), Bergen County (FEMA docket No. 7116)	
Wolf Creek:	
Approximately 240 feet upstream of Maple Avenue	*57
Approximately 410 feet upstream of Maple Avenue	*65
Maps available for inspection at the Building Inspector's Office, 275 Broad Avenue, Palisades Park, New Jersey.	
Paramus (borough), Bergen County (FEMA docket No. 7116)	
Sprout Brook:	
Downstream corporate limits (approximately 270 feet downstream of Roosevelt Avenue)	*43
Approximately 1,200 feet downstream of State Route 4	*43
Maps available for inspection at the Paramus Borough Hall, Engineer's Office, Jockish Square, Paramus, New Jersey.	
Ramsey (borough), Bergen County (FEMA docket No. 7116)	
Valentine Brook Tributary No. 2:	
At downstream corporate limits	*321
At confluence of Valentine	*331
Ramsey Brook:	
Approximately 200 feet downstream of Lakeside Drive	*341
Just downstream of Lakeside Drive	*343
Valentine Brook Tributary 2:	
At confluence with Valentine Brook	*331
Approximately 10 feet downstream of East Oak Street	*331
Maps available for inspection at the Borough of Ramsey, Engineering Department, 33 North Central Avenue, Ramsey, New Jersey.	
Ridgewood (village), Bergen County (FEMA docket No. 7116)	
Ho-Ho-Kus Brook:	
Approximately 250 feet upstream of Dam No. 2	*206
Approximately 1,050 feet upstream of Dam No. 2	*208
Maps available for inspection at the Village of Ridgewood Department of Public Works, Engineering Division, 131 North Maple Avenue, Ridgewood, New Jersey.	
River Vale (township), Bergen County (FEMA docket No. 7116)	
Cherry Brook:	
At confluence with the Hackensack River	*41
Approximately 500 feet downstream of Poplar Road	*41
Hackensack River:	
Approximately 600 feet downstream of Westwood Avenue	*26
Approximately 1,250 feet downstream of Old Tappan Road	*38
Maps available for inspection at the River Vale Town Hall, 406 Rivervale Road, River Vale, New Jersey.	
Rochelle Park (township), Bergen County (FEMA docket No. 7071)	
Saddle River:	
At Essex Street	*39
At upstream corporate limits	*44
Sprout Brook:	
At confluence with Saddle River	*43
At Plaza Way	*43
Maps available for inspection at the Clerk's Office, 405 Rochelle Avenue, Rochelle Park, New Jersey.	
Rutherford (borough), Bergen County (FEMA docket No. 7116)	
Newark Bay:	
Approximately 450 feet east of intersection of State Route 17 and Pierrepont Avenue	*8
Maps available for inspection at the Rutherford Municipal Building, 176 Park Avenue, Rutherford, New Jersey.	
Saddle Brook (township), Bergen County (FEMA docket No. 7071)	
Saddle River:	
Approximately 70 feet upstream of Outwater Lane	*37
At upstream corporate limits	*44
Coalberg Brook:	
At confluence with Saddle River	*43
Approximately 90 feet downstream of Interstate Route 80	*43
Maps available for inspection at the Building Department, 540 Saddle Road, Saddle Brook, New Jersey.	
Saddle River (borough), Bergen County (FEMA docket No. 7116)	
Saddle River:	
Approximately 1,350 feet upstream of Hollywood Avenue (downstream corporate limits)	*105
Approximately 2,150 feet downstream of Lower Cross Road	*113
Maps available for inspection at the Saddle River Municipal Building, 100 East Allendale Road, Saddle River, New Jersey.	
South Belmar (borough), Monmouth County (FEMA Docket No. 7124)	
Polly Pod and Lake Como:	
Entire shoreline within community	*10
Maps available for inspection at the Office of Administration, 1730 F Street, South Belmar, New Jersey.	
South Hackensack (township), Bergen County (FEMA docket No. 7116)	
Saddle River:	
At the CONRAIL bridge	*19
At downstream side of River Drive	*19
Maps available for inspection at the Township Hall, 227 Phillips Avenue, South Hackensack, New Jersey.	
Teaneck (township), Bergen County (FEMA docket No. 7116)	
Metzlers Creek:	
At West Hudson Avenue	*57
Approximately 60 feet upstream of West Hudson Avenue	*58
Maps available for inspection with Mr. Howarth Gilmore, Township Engineer, Municipal Building, 818 Teaneck Road, Teaneck, New Jersey.	
Tenafly (borough), Bergen County (FEMA docket No. 7116)	
Hudson River:	
At upstream corporate limits	*9
At downstream corporate limits	*9
Maps available for inspection at the Tenafly Building Department, 401 Tenafly Road, Tenafly, New Jersey.	
Waldwick (borough), Bergen County (FEMA docket No. 7116)	
Allendale Brook:	
At confluence with Ho-Ho-Kus Brook	*237
Approximately 850 feet downstream of New Street (at the upstream corporate limits)	*247
Ho-Ho-Kus Brook:	
Approximately 60 feet downstream of Dam No. 3	*228
Approximately 1,500 feet upstream of the confluence of Allendale Brook (upstream corporate limits)	*246
Approximately 1,350 feet upstream of Hollywood Avenue	*105

PROPOSED BASE (100-YEAR) FLOOD ELEVATIONS—Continued

Source of flooding and location	#Depth in feet above ground. *Elevation in feet (NGVD)
Approximately 2,150 feet downstream of Lower Cross Road (upstream corporate limits)	*113
Maps available for inspection at the Borough Clerk's Office, 15 East Prospect Street, Waldwick, New Jersey.	
Washington (township), Bergen County (FEMA docket No. 7116)	
Pine Brook:	
Approximately 230 feet upstream of confluence with Musquapsink Brook	*60
Approximately 160 feet upstream of Ridgewood Boulevard North	*86
Maps available for inspection at the Town Clerk's Office, 350 Hudson Avenue, Washington, New Jersey.	
Wood-Ridge (borough), Bergen County (FEMA docket No. 7116)	
Newark Bay:	
At intersection of Blum Boulevard and Union Street	*8
Maps available for inspection at the Borough Hall, 85 Humboldt Street, Wood-Ridge, New Jersey.	
Wyckoff (township), Bergen County (FEMA docket No. 7116)	
Ho-Ho-Kus Brook:	
Approximately 2,300 feet upstream of confluence of Valentine Brook (downstream corporate limits)	*298
Approximately 50 feet downstream of Wyckoff Avenue	*307
Ho-Ho-Kus Brook Tributary:	
Approximately 550 feet downstream of Old Post Road (at downstream corporate limits)	*320
Approximately 20 feet upstream of Clinton Avenue	*341
Goffle Brook:	
Approximately 75 feet downstream of Newtown Road	*269
Approximately 150 feet upstream of Carlton Road	*349
Demarest Avenue Tributary:	
At confluence with Goffle Brook	*289
Approximately 100 feet upstream of Jacqueline Drive	*318
Deep Voll Brook:	
At county boundary	*205
Approximately 1,000 feet upstream of Sicomac Avenue	*417
Maps available for inspection at the Township Engineer's Office, Memorial Town Hall-Scott Plaza, Wyckoff, New Jersey.	
NORTH CAROLINA	
Johnston County (unincorporated areas) (FEMA docket No. 7124)	
Black Creek:	
Approximately .45 mile upstream of U.S. Highway 301/St. 96 Highway	*123
Approximately 1,000 feet downstream of Secondary Road 1162	*126
Maps available for inspection at the Johnston County Planning Department, 206 Johnston Street, Smithfield, North Carolina.	
OHIO	
Bluffton (village), Allen County (FEMA docket No. 7110)	
Riley Creek:	
Approximately 350 feet downstream of corporate limit	*812
Approximately 100 feet upstream of Norfolk and Western Railway	*827
Little Riley Creek:	
At confluence with Riley Creek	*813
Approximately 175 feet upstream of Columbus Grove-Bluffton Road	*822
Maps available for inspection at the Bluffton Village Offices, 100 East Elm Street, Bluffton, Ohio.	
Hamilton County (unincorporated areas), (FEMA docket Nos. 7078 and 7124)	
Winton Woods Creek:	
At Daly Road	*759
Approximately 225 feet downstream of Desoto Drive	*782
West Fork Mill Creek:	
Approximately 300 feet downstream of Pippin Road	*773
At Blue Rock Road	*825
Maps available for inspection at the Hamilton County Department of Public Works, Hamilton County Administration Building, 138 East Court Street, Room 800, Cincinnati, Ohio.	
Highland Heights (city), Cuyahoga County (FEMA docket No. 7116)	
Tributary C:	
Approximately 300 feet upstream of Leverett Road	*936
Approximately 0.3 mile downstream of Highland Road	*943
Maps available for inspection at Steven Hovancsek & Associates, 2 Merit Drive, Richmond Heights, Ohio.	
Napoleon (city), Henry County (FEMA docket No. 7124)	
Maumee River:	
Approximately 1.8 miles downstream of Detroit Toledo Ironton Railroad bridge	*655
Approximately 2.3 miles upstream of Perry Street bridge	*659
Maps available for inspection at the Office of Zoning Administration, 255 West Riverview Avenue, Napoleon, Ohio.	
PENNSYLVANIA	
Avalon (borough), Allegheny County (FEMA docket No. 7110)	
Ohio River:	
Approximately 0.65 mile downstream of Divergence of Ohio River Back Channel	*723
Approximately 750 feet upstream of Divergence of Ohio River Back Channel	*724
Maps available for inspection at the Borough Hall, 640 California Avenue, Avalon, Pennsylvania.	
Baldwin (borough), Allegheny County (FEMA docket No. 7110)	
Monongahela River:	
Approximately 0.42 mile downstream of Glenwood Bridge	*735
Maps available for inspection at the Zoning Office, 3344 Churchview Avenue, Baldwin, Pennsylvania.	
Bellevue (borough), Allegheny County (FEMA docket No. 7110)	
Ohio River:	
Approximately 750 feet upstream of Divergence of Ohio River Back Channel	*724
Approximately 0.43 mile downstream of McKees Rocks Bridge	*724
Maps available for inspection at the Borough Hall, 537 Bayne Avenue, Bellevue, Pennsylvania.	
Braddock (borough), Allegheny County (FEMA docket No. 7110)	
Monongahela River:	
At a point approximately 550 feet upstream of Rankin Bridge	*739
At a point approximately 0.29 mile downstream of Lock & Dam No. 2	*740
Maps available for inspection at the Code Enforcement Office, 415 Sixth Street, Braddock, Pennsylvania.	
Clairton (city), Allegheny County (FEMA docket No. 7110)	
Monongahela River:	
Approximately 0.51 mile downstream of Glassport Bridge	*748
Approximately 500 feet downstream of confluence of Wylie Run	*750
Maps available for inspection at the City Engineer's Office, 551 Ravensburg Boulevard, Clairton, Pennsylvania.	
Collier (township), Allegheny County (FEMA docket No. 7110)	
Robinson Run:	
Approximately 1.09 miles downstream of Union Avenue	*887
Approximately 1.25 miles downstream of Union Avenue	*888
Chartiers Creek:	
Just downstream of Painters Run Road	*797
Approximately 0.39 mile upstream of State Route 50 (Washington Pike)	*801
Maps available for inspection at the Zoning Office, 2418 Hilltop Road, Collier, Pennsylvania.	
Coraopolis (borough), Allegheny County (FEMA docket No. 7110)	
Montour Run:	

PROPOSED BASE (100-YEAR) FLOOD ELEVATIONS—Continued

Source of flooding and location	#Depth in feet above ground. *Elevation in feet (NGVD)
At the upstream side of Montour Railroad	*719
Approximately 750 feet downstream of Coraopolis Boulevard	*719
Maps available for inspection at the Borough Hall, 1012 Fifth Avenue, Coraopolis, Pennsylvania.	
Crafton (borough), Allegheny County (FEMA docket No. 7110)	
Chartiers Creek:	
At Ingram Avenue	*748
Approximately 1.3 miles upstream of Ingram Avenue	*754
Maps available for inspection at the Borough Hall, 100 Stotz Avenue, Crafton, Pennsylvania.	
Cumberland (township), Greene County (FEMA docket No. 7110)	
Monongahela River:	
Approximately 500 feet downstream of confluence of Neel Run (downstream corporate limits)	*786
At confluence of Little Whiteley Creek (upstream corporate limits)	*794
Muddy Creek:	
Approximately 0.8 mile downstream of Township Route 634	*1,005
Approximately 470 feet upstream of Legislative Route 30102	*1,031
Maps available for inspection at the Cumberland Township Building, 100 Municipal Road, Carmichaels, Pennsylvania.	
Donora (borough), Washington County (FEMA docket No. 7116)	
Monongahela River:	
At approximately 0.76 mile downstream of Donora-Webster bridge (10th Street) (downstream corporate limits)	*758
At approximately 1,100 feet upstream of Donora-Monesson bridge (upstream corporate limits)	*760
Maps available for inspection at the Donora Municipal Complex—Administrative Office, 603 Meldon Avenue, Donora, Pennsylvania.	
Dravosburg (borough), Allegheny County (FEMA docket No. 7110)	
Monongahela River:	
Approximately 0.75 mile downstream of Mansfield Bridge	*746
Approximately 0.25 mile downstream of Mansfield Bridge	*746
Maps available for inspection at the Borough Hall, 226 Maple Avenue, Dravosburg, Pennsylvania.	
Dunkard (township), Greene County (FEMA docket No. 7110)	
Monongahela River:	
At confluence of Dunkard Creek	*805
Approximately 0.68 mile upstream of Point Marion Lock and Dam	*809

PROPOSED BASE (100-YEAR) FLOOD ELEVATIONS—Continued

Source of flooding and location	#Depth in feet above ground. *Elevation in feet (NGVD)
Maps available for inspection at the Dunkard Township Building, Corner of Grant Street and Taylortown Road, Bobtown, Pennsylvania.	
Dunlevy (borough), Washington County (FEMA docket No. 7124)	
Monongahela River:	
Downstream corporate limits	*765
Upstream corporate limits	*766
Maps available for inspection with Ms. Jeanne Jacobs, Borough Secretary, Mannina Avenue, Dunlevy, Pennsylvania.	
Duquesne (city), Allegheny County (FEMA docket No. 7110)	
Monongahela River:	
At a point approximately 0.27 mile upstream of Lock and Dam No. 2	*741
At a point approximately 1,200 feet upstream of McKeesport-Duquesne Bridge	*744
Maps available for inspection at the Building Inspector's Office, 12 South Second Street, Duquesne, Pennsylvania.	
East Bethlehem (township), Washington County (FEMA docket No. 7124)	
Monongahela River:	
Approximately 1,700 feet downstream of the confluence of Barneys Run (downstream corporate limits)	*780
At the confluence of Tenmile Creek (upstream corporate limits)	*783
Tenmile Creek:	
At confluence with Monongahela River	*783
Approximately 75 feet downstream of CONRAIL bridge over Tenmile Creek	*783
Maps available for inspection at the Municipal Building, Water Street, East Bethlehem, Pennsylvania.	
East Norwegian (township), Schuylkill County (FEMA docket No. 7124)	
Mill Creek:	
Approximately 660 feet downstream of Mill Creek Avenue bridge	*641
Approximately 190 feet upstream of Market Street bridge	*691
Maps available for inspection at the East Norwegian Township Offices, RD 3, Pottsville, Pennsylvania.	
East Pittsburgh (borough), Allegheny County (FEMA docket No. 7110)	
Turtle Creek:	
Backwater reach from Monongahela River up to Westinghouse Bridge at Lincoln Highway	*741
Maps available for inspection at the Borough Hall, 516 Bessemer Avenue, East Pittsburgh, Pennsylvania.	

PROPOSED BASE (100-YEAR) FLOOD ELEVATIONS—Continued

Source of flooding and location	#Depth in feet above ground. *Elevation in feet (NGVD)
Elco (borough), Washington County (FEMA docket No. 7124)	
Monongahela River:	
Downstream corporate limits (approximately 0.5 mile downstream of the confluence of Wood Run Hollow)	*769
Upstream corporate limits (approximately 0.5 mile upstream of the confluence of Wood Run Hollow)	*769
Maps available for inspection at the Elco Municipal Building, Route 88, Elco, Pennsylvania.	
Elizabeth (borough), Allegheny County (FEMA docket No. 7110)	
Monongahela River:	
Approximately 0.21 mile downstream of confluence of Fallen Timber Run	*750
At confluence of Smiths Run	*750
Fallen Timber Run:	
At confluence with Monongahela River	*750
Approximately 400 feet downstream of Rothey Street (Pennaman Avenue)	*752
Maps available for inspection at the Borough Hall, 206 Third Avenue, Elizabeth, Pennsylvania.	
Elizabeth (township), Allegheny County (FEMA docket No. 7110)	
Monongahela River:	
Approximately 100 feet upstream of confluence of Wylie Run	*750
Approximately 0.43 mile downstream of State Route 51	*750
Wylie Run:	
At confluence with Monongahela River	*750
Approximately 150 feet downstream of Glassport Road (McKeesport Road)	*750
Maps available for inspection at the Township Hall, 522 Rock Run Road, Township of Elizabeth, Pennsylvania.	
Fallowfield (township), Washington County (FEMA docket No. 7116)	
Monongahela River:	
Downstream corporate limits	*761
Upstream corporate limits (approximately 1,000 feet downstream of the North Charleroi bridge)	*761
Maps available for inspection at the Fallowfield Township Building, 9 Memorial Drive, Fallowfield, Pennsylvania.	
Forward (township), Allegheny County (FEMA docket No. 7110)	
Monongahela River:	
At confluence of Smiths Run	*750
Maps available for inspection at the Township Municipal Building, River Road, Forward, Pennsylvania.	
Franklin Park (borough), Allegheny County (FEMA docket No. 7110)	
Bear Run:	
Approximately 0.51 mile upstream of Mount Nebo Road	*950

PROPOSED BASE (100-YEAR) FLOOD ELEVATIONS—Continued

Source of flooding and location	#Depth in feet above ground. *Elevation in feet (NGVD)
Maps available for inspection at the Borough Hall, 2428 Rochester Road, Franklin Park, Pennsylvania.	
Glassport (borough), Allegheny County (FEMA docket No. 7110)	
Monongahela River:	
Approximately 0.34 mile upstream of confluence of Harrison Hollow Stream	*747
Approximately 0.17 mile upstream of Glassport Bridge	*748
Maps available for inspection at the Borough Hall, Fifth & Monongahela, Glassport, Pennsylvania.	
Greensboro (borough), Greene County (FEMA docket No. 7112)	
Monongahela River:	
Approximately 900 feet downstream of downstream corporate limits	*800
At the upstream corporate limits	*801
Maps available for inspection at the Greensboro Borough Building, Main Street, Greensboro, Pennsylvania.	
Hamilton (township), Monroe County (FEMA docket No. 7112)	
McMichael Creek:	
At upstream corporate limits	*623
Approximately 150 feet downstream of Turkey Hill Road	*466
Maps available for inspection at the Township Building, Fenner Street, Hamilton, Pennsylvania.	
Harmar (township), Allegheny County (FEMA docket No. 7110)	
Little Deer Creek:	
Approximately 150 feet downstream of Jacoby Road	*783
Approximately 700 feet upstream of Bessemer and Lake Erie Railroad	*815
Maps available for inspection at the Township Hall, 701 Freeport Road, Harmar, Pennsylvania.	
Heidelberg (borough), Allegheny County (FEMA docket No. 7110)	
Tributary A to Chartiers Creek:	
At confluence with Chartiers Creek to approximately 0.49 mile upstream of confluence	*787
Maps available for inspection at the Borough Hall, 1631 East Railroad Street, Heidelberg, Pennsylvania.	
Henderson (township), Huntingdon County (FEMA docket No. 7124)	
Juniata River:	
Approximately 0.57 mile upstream of State Route 829	*602
At upstream corporate limits	*614
Maps available for inspection at the Chairman of the Board of Supervisors' Home, R.D. 3, Box 223, Huntington, Pennsylvania.	
Homestead (borough), Allegheny County (FEMA docket No. 7110)	
Monongahela River:	
Approximately 600 feet downstream of Pittsburgh Homestead Bridge	*737
Approximately 4,000 feet upstream of Pittsburgh Homestead Bridge	*737
Maps available for inspection at the Borough Hall, 1705 Maple Street, Homestead, Pennsylvania.	
Jefferson (borough), Allegheny County (FEMA docket No. 7110)	
Lick Run:	
Approximately 400 feet upstream of Cochrans Mill Road	*963
At downstream side of Curry Hollow Road	*985
Monongahela River:	
Approximately 0.7 mile downstream of Glassport Highway Bridge	*747
At confluence of Perry Mill Run	*752
Lobbs Run:	
At confluence with Monongahela River	*752
Approximately 100 feet upstream of Walton Road	*752
Maps available for inspection at the Borough Hall, 925 Old Clairton Road, Jefferson, Pennsylvania.	
Jefferson (township), Fayette County (FEMA docket No. 7116)	
Monongahela River:	
At the downstream corporate limits	*767
At the upstream corporate limits	*774
Redstone Creek:	
At the confluence with Monongahela River	*774
Approximately 0.83 mile upstream of CONRAIL bridge	*774
Maps available for inspection at the Jefferson Township Building, Rural Route 2, Jefferson, Pennsylvania.	
Jefferson (township), Greene County (FEMA Docket No. 7124)	
Monongahela River:	
At the confluence of Tenmile Creek (at the downstream corporate limits)	*783
At the upstream corporate limits	*785
Tenmile Creek:	
At the confluence with the Monongahela River	*783
At the confluence with South Fork Tenmile River	*783
South Fork Tenmile Creek:	
At the confluence with Tenmile Creek	*783
Approximately 500 feet upstream of the confluence with Tenmile Creek	*783
Maps available for inspection at the Township Clerk's Office, Jefferson, Pennsylvania.	
Kilbuck (township), Allegheny County (FEMA docket No. 7110)	
Lowries Run:	
Approximately 0.63 mile downstream of the approximate center of the multiple lanes of Interstate 279	*798
Approximately 0.49 mile downstream of the approximate center of the multiple lanes of Interstate 279	*802
Maps available for inspection at the Township Hall, 343 Eicher Road, Kilbuck, Pennsylvania.	
Leetsdale (borough), Allegheny County (FEMA docket No. 7110)	
Big Sewickley Creek:	
At a point approximately 250 feet downstream of Ohio River Boulevard	*711
At a point approximately 250 feet upstream of Beaver Road	*711
Maps available for inspection at the Borough Hall, 85 Broad Street, Leetsdale, Pennsylvania.	
Pennsylvania	
Lincoln (borough), Allegheny County (FEMA docket No. 7110)	
Monongahela River:	
Approximately 0.23 mile upstream from the Glassport Highway Bridge	*748
At the confluence with Wylie Run	*750
Boston Hollow Run:	
Approximately 0.46 mile upstream of Pitt Street Tributary	*852
Approximately 0.66 mile upstream of Pitt Street Tributary	*889
Wylie Run:	
At confluence with the Monongahela River	*750
Approximately 0.25 mile upstream of Mill Hill Road	*859
Maps available for inspection at the Borough Hall, Port View Road, Lincoln, Pennsylvania.	
Luzerne (township), Fayette County (FEMA docket No. 7110)	
Monongahela River:	
Approximately 1.9 miles downstream of confluence of Rush Run (at downstream corporate limits)	*776
Approximately 3.6 miles upstream of confluence of Hereford Hollow (at upstream corporate limits)	*789
Maps available for inspection at the Luzerne Township Building, 415 Hopewell Road, Brownsville, Pennsylvania.	
McCandless (town), Allegheny County (FEMA docket No. 7110)	
Girty's Run:	
Approximately 0.67 mile upstream of Three Degree Road	*1,092
Maps available for inspection at the Town Hall, Zoning and Planning Office, 9955 Grubbs Road, McCandless, Pennsylvania.	
McKeesport (city), Allegheny County (FEMA docket No. 7110)	
Monongahela River:	
At McKeesport-Duquesne Bridge	*744
Approximately 0.45 mile downstream of Mansfield Bridge	*746
Youghiogheny River:	
At confluence with Monongahela River	*745

PROPOSED BASE (100-YEAR) FLOOD ELEVATIONS—Continued

Source of flooding and location	#Depth in feet above ground. *Elevation in feet (NGVD)
Approximately 500 feet upstream of 15th Avenue	*745
Maps available for inspection at the Building Inspector's Office, 201 Lysle Boulevard, McKeesport, Pennsylvania.	
Monongahela (township), Greene County (FEMA docket No. 7116)	
Monongahela River:	
At the confluence of Little Whiteley Creek	*794
At the confluence of Dunkard Creek	*805
Maps available for inspection at the Monongahela Township Building, R.D. 1, Monongahela, Pennsylvania.	
Monongahela (city), Washington County (FEMA docket No. 7110)	
Monongahela River:	
Approximately 1.1 miles downstream of Monongahela City bridge	*755
Approximately 0.9 mile upstream of Monongahela Highway	*756
Pigeon Creek:	
At confluence with Monongahela River	*756
Upstream corporate limit	*756
Maps available for inspection at the Monongahela City Hall, 449 West Main Street, Monongahela, Pennsylvania.	
Monroeville (municipality), Allegheny County (FEMA docket No. 7110)	
Turtle Creek:	
At the confluence of Lyons Run	*832
Approximately 1.48 miles upstream of confluence of Abers Creek	*866
Maps available for inspection at the Engineering Office, 2700 Monroeville Boulevard, Monroeville, Pennsylvania.	
Moon (township), Allegheny County (FEMA docket No. 7110)	
McClarens Run:	
At confluence with Montour Run	*867
Approximately 180 feet upstream of Hilton Inn Drive	*920
Montour Run:	
Approximately 850 feet downstream of State Routes 50 and 51	*719
At confluence of McClarens Run	*867
Maps available for inspection at the Building Inspector's Office, 1000 Beaver Grade Road, Moon, Pennsylvania.	
Munhall (borough), Allegheny County (FEMA docket No. 7110)	
Monongahela River:	
At a point approximately 0.76 mile upstream of Pittsburgh Homestead Bridge	*737
At a point approximately 1,250 feet downstream of Rankin Bridge	*739
Maps available for inspection at the Borough Hall, 1900 West Street, Munhall, Pennsylvania.	
Nicholson (township), Fayette County (FEMA docket No. 7112)	
Monongahela River:	
At the confluence of Cats Run	*798
Approximately 1,100 feet downstream of the confluence of Georges Creek	*800
Maps available for inspection at the Nicholson Township Building, R.D. 2, Smithfield, Pennsylvania.	
North Braddock (borough), Allegheny County (FEMA docket No. 7110)	
Monongahela River:	
At a point approximately 700 feet downstream of Lock & Dam No. 2	*740
At a point approximately 250 feet downstream of Port Perry Bridge	*741
Maps available for inspection at the Borough Hall, 600 Anderson Street, North Braddock, Pennsylvania.	
North Versailles (township), Allegheny County (FEMA docket No. 7110)	
Monongahela River:	
At a point approximately 0.55 mile upstream of Port Perry Bridge	*742
At a point approximately 0.70 mile downstream of McKeesport-Duquesne Bridge	*743
Maps available for inspection at the Township Municipal Center, 1401 Greensburg Avenue, North Versailles, Pennsylvania.	
Penn Hills (municipality), Allegheny County (FEMA docket No. 7110)	
Thompson Run:	
Approximately 0.46 mile downstream of South McCully Drive	*839
Approximately 600 feet upstream of Union Railroad culvert opening (upstream side)	*962
Maps available for inspection at the Planning Department, 12245 Frankstown Road, Penn Hills, Pennsylvania.	
Pennsylvania	
Pittsburgh (city), Allegheny County (FEMA docket No. 7110)	
Monongahela River:	
Approximately 200 feet downstream of South Tenth Street Bridge	*731
Approximately 1.11 miles upstream of Pittsburgh Homestead Bridge	*738
Spring Garden Run:	
Approximately 1,530 feet downstream of Beech Street (Mount Pleasant Road)	*906
Becks Run:	
At the confluence with the Monongahela River	*734
Approximately 1,680 feet upstream of Beck Run Road (most upstream crossing)	*819
Maps available for inspection at the Department of City Planning, 4th Floor Civic Building, 200 Ross Street, Pittsburgh, Pennsylvania.	
Plum (borough), Allegheny County (FEMA docket No. 7110)	
Pucketa Creek:	
Just upstream of State Route 366 (Greenburg Highway)	*784
At county boundary	*852
Maps available for inspection at the Planning Department, 4575 New Texas Road, Plum, Pennsylvania.	
Port Vue (Borough), Allegheny County (FEMA Docket No. 7110)	
Youghiogheny River:	
Approximately 0.12 mile upstream of West 5th Avenue	*745
Approximately 500 feet upstream of 15th Avenue	*745
Maps available for inspection at the Borough Hall, 1191 Romine Avenue, Port Vue, Pennsylvania.	
Rankin (borough), Allegheny County (FEMA docket No. 7110)	
Monongahela River:	
At Rankin Bridge	*739
Maps available for inspection at the Borough Hall, 320 Hawkins Avenue, Rankin, Pennsylvania.	
Roscoe (borough), Washington County (FEMA docket No. 7128)	
Monongahela River:	
Downstream corporate limits	*768
Upstream corporate limits	*769
Maps available for inspection at the Borough Secretary's Office, 503 Underwood Street, Roscoe, Pennsylvania.	
South Fayette (township), Allegheny County (FEMA docket No. 7110)	
Robinson Run:	
Approximately 1.13 miles downstream of Union Avenue	*888
At the downstream side of Mevey Avenue (Willow Street)	*922
Maps available for inspection at the Township Municipal Building, 515 Millers Run Road, South Fayette, Pennsylvania.	
Swissvale (borough), Allegheny County (FEMA Docket No. 7110)	
Monongahela River:	
Approximately 1.11 mile upstream of Pittsburgh Homestead Bridge	*738
Approximately 0.61 mile downstream of Rankin Bridge	*738
Maps available for inspection at the Borough Hall, 7560 Roslyn Street, Swissvale, Pennsylvania.	
Tarentum (borough), Allegheny County (FEMA docket No. 7110)	
Bull Creek:	
Approximately 280 feet downstream of confluence of Little Bull Creek	*758

PROPOSED BASE (100-YEAR) FLOOD ELEVATIONS—Continued

Source of flooding and location	#Depth in feet above ground. *Elevation in feet (NGVD)
Approximately 0.61 mile upstream of confluence of Little Bull Creek	*774
Maps available for inspection at the Borough Building, 304 Lock Street, Tarentum, Pennsylvania.	
Upper St. Clair (township), Allegheny County (FEMA docket No. 7110)	
Painters Run:	
Approximately 200 feet downstream of Bower Hill Road	*846
Approximately 400 feet upstream of Painters Run Road	*869
Maps available for inspection at the Township Municipal Building, 1820 McLaughlin Run Road, Upper St. Clair, Pennsylvania.	
Washington (township), Fayette County (FEMA docket No. 7112)	
Monongahela River:	
At downstream corporate limits	*765
At upstream corporate limits (approximately 0.6 mile upstream of the confluence of Little Redstone Creek)	*767
Little Redstone Creek:	
At confluence with Monongahela River	*767
Approximately 670 feet downstream of State Route 206 bridge	*767
Maps available for inspection at the Washington Township Offices, 1390 Fayette Avenue, Belle Vernon, Pennsylvania.	
West Elizabeth (borough), Allegheny County (FEMA docket No. 7110)	
Monongahela River:	
At State Route 51	*750
Approximately 0.76 mile upstream of State Route 51	*750
Maps available for inspection at the Borough Building, Corner of 5th & Lincoln, West Elizabeth, Pennsylvania.	
West Homestead (borough), Allegheny County (FEMA docket No. 7110)	
Monongahela River:	
Approximately 650 feet upstream of Glenwood Bridge	*736
Approximately 600 feet downstream of Pittsburgh Homestead Bridge	*737
Maps available for inspection at the Borough Engineer's Office, 401 West 8th Avenue, West Homestead, Pennsylvania.	
West Mifflin (borough), Allegheny County (FEMA docket No. 7110)	
Monongahela River:	
Approximately 0.29 mile upstream of Rankin Bridge	*739
Approximately 0.78 mile downstream of Glassport Bridge	*747
Streets Run:	
Approximately 840 feet downstream of Tributary No. 1	*807

PROPOSED BASE (100-YEAR) FLOOD ELEVATIONS—Continued

Source of flooding and location	#Depth in feet above ground. *Elevation in feet (NGVD)
Approximately 1.34 miles upstream of Tributary No. 2	*977
Maps available for inspection at the Borough Hall, 4733 Greenspring Avenue, West Mifflin, Pennsylvania.	
Whitaker (borough), Allegheny County (FEMA docket No. 7110)	
Monongahela River:	
At a point approximately 0.24 mile downstream of Rankin Bridge	*739
At a point approximately 0.29 mile upstream of Rankin Bridge	*739
Maps available for inspection at the Borough Hall, 125 Grant Street, Whitaker, Pennsylvania.	
White Oak (borough), Allegheny County (FEMA docket No. 7110)	
Crooked Run:	
Approximately 250 feet downstream of Pennsylvania Avenue	*788
At 5th Avenue	*799
Maps available for inspection at the Borough Municipal Building, 2280 Lincoln Way, White Oak, Pennsylvania.	
Wilkins (township), Allegheny County (FEMA docket No. 7110)	
Thompson Run:	
At downstream side of Factory Entrance Drive	*755
At downstream side of Union Railroad	*767
Maps available for inspection at the Township Hall, 110 Peffer Road, Wilkins, Pennsylvania.	
SOUTH CAROLINA	
Edgefield County (unincorporated areas) (FEMA docket No. 7124)	
Savannah River:	
At confluence of Fox Creek	*147
Approximately 4.65 miles upstream of Stevens Creek Dam	*195
Fox Creek:	
At its confluence with the Savannah River	*147
Approximately 2,750 feet upstream of its confluence with the Savannah River	*155
Maps available for inspection at the Edgefield County Courthouse, Room 106, Edgefield, South Carolina.	
McCormick County (unincorporated areas) (FEMA docket No. 7124)	
Savannah River:	
Approximately 0.7 mile downstream of State Highway 28	*195
Approximately 0.5 mile downstream of J. Strom Thurmond Dam	*203
Maps available for inspection at the County Administrator's Office, Airport Road, McCormick, South Carolina.	

PROPOSED BASE (100-YEAR) FLOOD ELEVATIONS—Continued

Source of flooding and location	#Depth in feet above ground. *Elevation in feet (NGVD)
TENNESSEE	
Decherd (city), Franklin County (FEMA docket No. 7110)	
Wagner Creek:	
Approximately 800 feet upstream of Sharp Springs Road	*894
At confluence of Bluespring Branch	*960
Bluespring Branch:	
At confluence with Wagner Creek	*960
Approximately 1.59 miles upstream of confluence with Wagner Creek	*994
Maps available for inspection at the Decherd City Hall, 1301 West Main Street, Decherd, Tennessee.	
Franklin County (unincorporated areas) (FEMA docket No. 7110)	
Wagner Creek:	
At upstream side of Old Cowan Road	*950
Approximately 2.2 miles upstream of Old Cowan Road	*993
Bluespring Branch:	
At confluence with Wagner Creek	*960
Approximately 2.2 miles upstream of confluence with Wagner Creek	*1,008
Sink Hole Area:	
Near the City of Decherd (North of Floyd Street)	*948
Maps available for inspection at the Franklin County Courthouse Annex, 110 South High Street, Winchester, Tennessee.	
Winchester (city), Franklin County (FEMA docket No. 7110)	
Wagner Creek:	
Approximately 800 feet upstream of Sharp Springs Road	*894
Approximately 1,300 feet upstream of Old Winchester-Decherd Road	*918
Maps available for inspection at the Winchester City Hall, 7 South High Street, Winchester, Tennessee.	
WEST VIRGINIA	
Fairmont (city), Marion County (FEMA docket No. 7124)	
Monongahela River:	
At downstream corporate limit	*870
Approximately 300 feet downstream of CSX Transportation bridge	*874
Maps available for inspection with Mr. David J. Marino, Community Planning and Development, 200 Jackson Street, Fairmont, West Virginia.	
Granville (town), Monongalia County (FEMA docket No. 7124)	
Monongahela River:	
Approximately .72 mile downstream of confluence with Dents Run	*813
At confluence of Dents Run	*813
Dents Run:	
At confluence with Monongahela River	*813
Approximately 0.71 mile upstream of the confluence with Monongahela River	*813

PROPOSED BASE (100-YEAR) FLOOD ELEVATIONS—Continued

Source of flooding and location	#Depth in feet above ground. *Elevation in feet (NGVD)
Maps available for inspection at the Town Hall, 233 Dents Run Boulevard, Granville, West Virginia.	
Marion County (unincorporated areas) (FEMA docket No. 7124)	
Monongahela River:	
At downstream county boundary	*862
Approximately 140 feet upstream of CSX Transportation Railroad bridge	*870
Maps available for inspection at the Marion County Commissioner's Office, 200 Jackson Street, Fairmont, West Virginia.	
Monongalia County (unincorporated areas) (FEMA docket No. 7116)	
Dents Run:	
Approximately 200 feet downstream of County Route 49 (Dents Run Boulevard)	*818
Approximately 0.46 mile upstream of County Route 49 (Dents Run Boulevard)	*836
Monongahela River:	
At the downstream county boundary (West Virginia State boundary)	*809
At the upstream county boundary	*862
Cobun Creek:	
Approximately 1,360 feet upstream of confluence with Monongahela River	*824
Approximately 1,740 feet upstream of confluence with Monongahela River	*830
Maps available for inspection at the Office of Emergency Management, University of West Virginia, Health Science Center, Room G252A, Morgantown, West Virginia.	
Morgantown (city), Monongalia County (FEMA docket No. 7124)	
Monongahela River:	
At downstream corporate limits	*812
Approximately 1,600 feet upstream of confluence with Cobun Creek	*819
Cobun Creek:	
At confluence with Monongahela River	*818
Approximately 130 feet downstream of U.S. Route 119	*818
Maps available for inspection at the City Engineering Department, 389 Spruce Street, Morgantown, West Virginia.	
Rivesville (town), Marion County (FEMA docket No. 7110)	
Monongahela River:	
A point approximately 0.49 mile downstream of Pharoah Run (downstream corporate limit)	*867
Approximately 600 feet upstream of confluence of Pharoah Run	*868
Maps available for inspection at the Town Hall, 142 Main Street, Rivesville, West Virginia.	
Star City (town), Monongalia County (FEMA docket No. 7124)	
Monongahela River:	
Approximately 0.81 mile downstream of Monongahela Boulevard (U.S. Route 19)	*812
Approximately 1,900 feet upstream of the confluence of Pompano Run	*813
Pompano Run:	
At confluence with Monongahela River	*812
Approximately 200 feet upstream of confluence with the Monongahela River	*812
Maps available for inspection at the Town Office, 370 Broadway Avenue, Star City, West Virginia.	
Wisconsin	
Washburn (city), Bayfield County (FEMA docket No. 7124)	
Lake Superior:	
Entire shoreline within community	*605
Maps available for inspection at the City Hall, 119 Washington Avenue, Washburn, Wisconsin.	

(Catalog of Federal Domestic Assistance No. 83.100, ''Flood Insurance'')

Dated: June 22, 1995.

Richard T. Moore,

Associate Director for Mitigation.

[FR Doc. 95–16416 Filed 7–3–95; 8:45 am]

BILLING CODE 6718–03–P

FEDERAL COMMUNICATIONS COMMISSION

47 CFR Part 0

[DA 95–1397]

Reorganization To Create a Competition Division Within the Office of General Counsel

AGENCY: Federal Communications Commission.

ACTION: Final rule.

SUMMARY: This amendment changes the Commission's Rules to incorporate a reorganization within the Office of General Counsel to create a Competition Division. This amendment also incorporates minor changes within the Office of General Counsel as a result of other reorganizations within the Commission.

EFFECTIVE DATE: July 5, 1995.

FOR FURTHER INFORMATION CONTACT: Nancy M. Camp, 202–418–0442.

SUPPLEMENTARY INFORMATION:

Order

Adopted: June 21, 1995.

Released: June 22, 1995

By the Managing Director:

In the matter of Amendment of Part 0 of the Commission's Rules to Reflect a Reorganization of the Office of General Counsel.

1. On September 27, 1994, the Commission adopted a proposed reorganization to create a Competition Division within the Office of General Counsel. The implementation of the proposed reorganization requires amendment to Part 0 of the Commission's Rules and Regulations. In accordance with the Commission's action, this Order makes the necessary revisions and other minor editorial changes in Part 0 of the Commission's Rules.

2. The amendments adopted herein pertain to agency organization. The notice and comment and effective date provisions of Section 4 of the Administrative Procedure Act, 5 U.S.C. § 553, are therefore inapplicable. Authority for the amendments adopted herein is contained in Sections (4)(i) and 5(b) of the Communications Act of 1934, as amended.

4. Accordingly, It Is Ordered, pursuant to the authority delegated under 47 C.F.R. 0.231(d) and effective upon publication in the **Federal Register**, that Part 0 of the Rules and Regulations be amended as set forth hereto.

List of Subjects in 47 CFR Part 0

Authority delegations (Government agencies), Organization and functions (Government agencies.)

Federal Communications Commission.

Andrew S. Fishel,

Managing Director.

Final Rules

Part 0 of Chapter I of Title 47 of the Code of Federal Regulations is amended as follows:

PART 0—COMMISSION ORGANIZATION

1. The authority citation for part 0 continues to read as follows:

Authority: Section 5, 48 Stat. 1068, as amended; 47 U.S.C. 155.

2. Section 0.41 is amended by removing in paragraph (f) the title ''Chief Engineer'' and adding in its place ''Office of Engineering and Technology''; revising paragraph (g); removing paragraph (j) and redesignating paragraphs (k) through (o) as (j) through (n) respectively; and revising newly redesignated paragraphs (m) and (n) to read as follows:

§ 0.41 Functions of the Office.

* * * * *

(g) To serve as the Commission's advocate for competition throughout the telecommunications industry and, specifically, to help to ensure that Commission policy development employs uniform or consistent analysis and that FCC policy encourages and promotes competitive market structures in affected industry segments by providing bureaus/offices with the necessary support to identify, evaluate, and effectively resolve competitiveness issues.

* * * * *

(m) To advise the Commission in the preparation and revision of rules and the implementation and administration of ethics regulations and the Freedom of Information, Privacy, Government in the Sunshine and Alternative Dispute Resolution Acts.

(n) To assist and make recommendations to the Commission, and to individual Commissioners assigned to review initial decisions, as to the disposition of cases of adjudication and such other cases as, by Commission policy, are handled in the same manner and which have been designated for hearing.

1. Section 0.251 is amended by revising paragraph (b); and removing and reserving paragraphs (c), (d) and (e), to read as follows:

§ 0.251 Authority delegated.

* * * * *

(b) Insofar as authority is not delegated to any other Bureau or Office, and with respect only to matters which are not in hearing status, the General Counsel is delegated authority:

(1) To act upon requests for extension of time within which briefs, comments or pleadings may be filed.

(2) To dismiss, as repetitious, any petition for reconsideration of a Commission order which disposed of a petition for reconsideration and which did not reverse, change, or modify the original order.

(3) To dismiss or deny petitions for rulemaking which are repetitive or moot or which, for other reasons, plainly do not warrant consideration by the Commission.

(4) To dismiss as repetitious any petition for reconsideration of a Commission order denying an application for review which fails to rely on new facts or changed circumstances.

(c) [Reserved]

(d) [Reserved]

(e) [Reserved]

* * * * *

[FR Doc. 95–16071 Filed 7–3–95; 8:45 am]

BILLING CODE 6712–01–M

---

47 CFR Part 1

[MD Docket No. 94–19; FCC 95–257]

FY 1994 Regulatory Fees

AGENCY: Federal Communications Commission.

ACTION: Final rule.

SUMMARY: In June 1994, the Commission adopted rules to implement Section 9 of the Communications Act to provide for the assessment and collection of regulatory fees to recover the cost of the Commission's enforcement, policy and rulemaking, user information and international activities. This MO&O is responding to petitions for reconsideration and clarification of the *FY 1994 Report and Order.* This MO&O clarifies the standards under which waivers, reductions or exemptions will be granted and the rule adopted broadens the scope of the exemptions for nonprofit entities. The intended effect of this MO&O is to provide guidance to the public and avoid any potential uncertainty.

EFFECTIVE DATE: September 5, 1995.

FOR FURTHER INFORMATION CONTACT: Jerome D. Remson, Office of General Counsel, (202) 418–1780.

SUPPLEMENTARY INFORMATION: A summary of the Commission's *Memorandum Opinion and Order* (MO&O), adopted June 15, 1995 and released June 22, 1995, is set forth below. The full text of this document is available for inspection and copying during normal business hours in the Administrative Law Division, Office of General Counsel (Rm. 616), 1919 M Street, N.W., Washington, D.C. The full text may also be purchased from the Commission's copy contractor, International Transcription Service, Inc. (ITS), 2100 M Street, N.W., Suite 140, Washington, D.C. 20037.

Summary of Memorandum Opinion and Order

1. Introduction. In the *Implementation of Section 9 of the Communications Act,* 59 FR 30984 (June 16, 1994), 9 FCC Rcd 5333 (1994) (*FY 1994 Report and Order*), the Commission adopted rules to implement Section 9 of the Communications Act, as amended, 47 U.S.C. 159. Those rules provide for the assessment and collection of regulatory fees to recover the cost of the Commission's enforcement, policy and rulemaking, user information and international activities. 47 U.S.C. 159(a). Now before the Commission are petitions for reconsideration and clarification of the *FY 1994 Report and Order.* A list of the parties filing petitions for reconsideration are set forth in Appendix A. We also considered several issues arising from petitions for waiver, reduction or exemption of the regulatory fees assessed for the 1994 fiscal year (FY 94).

2. Discussion. *Small Entities.* We properly rejected Fireweed's contention that our efforts to distribute the *NPRM* to small businesses were inadequate. As noted in the *FY 1994 Report and Order,* 9 FCC Rcd at 5337 n.6, 5 U.S.C. 609 requires that we ''assure that small entities have been given an opportunity to participate in the rulemaking.'' Although the statute lists appropriate measures which the Commission may use to ensure that the small entities have such an opportunity to participate, the Act does not require the Commission to follow any specific procedure.

3. We also rejected Fireweed's contention that our rules are biased against small entities. To the contrary, in implementing the fee schedule, we have expressly adopted procedures for payment of fees that are designed to minimize the burden on small entities, in accordance with congressional intent. Congress provided that the Commission may grant individual waivers of the fees, and it is our policy to grant individual waivers where imposition of the regulatory fee would be inequitable or would impinge on a regulatee's ability to serve the public. To the extent that Fireweed objects to specific fees, the fees for FY 1994 were adopted by Congress, and we did not depart from the fee schedule for FY 1994.

4. *Nonprofit Entities.* Section 9(h) exempts nonprofit entities from the regulatory fee requirement. 47 U.S.C. 159(h). In the *FY 1994 Report and Order,* we held that the nonprofit exemption will be available only to those regulatees who establish their nonprofit status under section 501 of the Internal Revenue Code. 26 U.S.C. 501. 9 FCC Rcd at 5340 ¶ 17. We have received requests for exemptions from the regulatory fees from regulatees that have been certified as nonprofit entities by state agencies (*i.e.,* they hold nonprofit status at the state level) but which do not possess Section 501 IRS Certification. Thus, there are instances where *bona fide* nonprofit entities should be accorded exemptions under Section 9(h) event though they have not established their tax exempt status

under Section 501. Therefore, while we will continue to grant an automatic exemption for nonprofit status to all Section 501 tax exempt organizations, we are amending our rules to allow entities to demonstrate nonprofit status by certification from a state or other government entity. *See* 47 CFR 1.1162(c).

5. *Confidentiality.* The *FY 1994 Report and Order,* 9 FCC Rcd at 5372, ¶ 110, denied a request to amend Section 0.457 of the rules to protect the confidentiality of data submitted with regulatory fee payments. We noted that regulatees could request confidentiality for such data when they submitted their fee payments. NYNEX and Cellular Telecommunications Industry Association (CTIA) now request the Commission to reconsider this determination. For FY 1994, common carrier fee calculations were based on the number of a carrier's presubscribed lines, access lines, or subscribers. The carriers argue that this information should be regarded as confidential because it can be used by competing carriers to determine the extent of market penetration and thereby gain a competitive advantage. Thus, the carriers conclude that the Commission should amend Section 0.457 of the rules to protect the confidentiality of the fee calculations.

6. The requests to amend the rules will be denied. There has been no convincing showing of a need to modify the rules. We are unaware of any FOIA requests for access to fee data. Moreover, if any regulatee perceives a need to protect information filed with the Commission from public disclosure, they can request confidential protection pursuant to 47 CFR 0.459 when they file information with the Commission.

7. *Bearer circuits:* Sprint Corporation (Sprint) filed a petition requesting reconsideration of the language in the *FY 1994 Report and Order,* 9 FCC Rcd at 5367 ¶ 98, which reads:

> The fee is to be paid by the facilities-based common carrier activating the circuit in any transmission facility for the purpose of service to an end user or resale carrier. Private submarine cable operators also are to pay fees for circuits sold on an indefeasible right of use (IRU) basis or leased in their private submarine cables to any customer of the private cable operator.

Sprint asserts that this language applies the regulatory fees for active 64 Kilobyte per second international circuits to both the operators of private submarine cable systems and to the common carriers who use circuits on such systems to provide international telecommunication services. This policy results in Sprint paying two regulatory fees for the PTAT–1 cable circuits used by Sprint Communications Co. L.P. for common carrier services. Sprint complains that this results in it being double charged as both the international carrier and the private cable operator for the same private cable circuits. Sprint points out that there is no similar double charge for other common carrier cable systems, and that the double charges place it at a severe and unjustified competitive disadvantage.

8. We agree with Sprint, and we will eliminate the double charge assessments for private submarine cable system circuits used by international common carriers. We will modify the above quoted language to read:

> Private submarine cable operators also are to pay fees for circuits sold on an indefeasible right of use (IRU) basis or leased to any customer other than an international common carrier authorized by the Commission to provide U.S. international common carrier services.

9. *Waiver Issues.* In the *FY 1994 Report and Order,* 9 FCC Rcd at 5344 ¶ 29, we stated that we would waive the regulatory fees ''on a case by case basis in extraordinary and compelling circumstances upon a showing that a waiver * * * would override the public interest in reimbursing the Commission for its regulatory costs.'' However, the *FY 1994 Report and Order* did not establish specific standards for waivers of the fees or define with specificity what information would be required.

10. We will grant waivers of the fees on a sufficient showing of financial hardship. Mere allegations or documentation of financial loss, standing alone, will not support a waiver request. Rather, we will grant a waiver only when the impact of the regulatory fee will affect a regulatee's ability to serve the public. It will be incumbent upon each regulatee to fully document its financial position and show that it lacks sufficient funds to pay the regulatory fees and to maintain its service to the public. Regulatees may be asked to provide information such as a balance sheet and profit and loss statement (audited if available), a cash flow projection for the next twelve months (with an explanation of how it is calculated), a list of their officers and their individual compensation, together with a list of their highest paid employees, other than officers, and the amount of their compensation, or similar information.

11. Evidence of bankruptcy or receivership is sufficient to establish financial hardship. Moreover, where a bankruptcy trustee, receiver, or debtor in possession is negotiating a possible transfer of a license, the regulatory fee could act as an impediment to the negotiations and the transfer of the station to a new licensee. Thus, we will waive the regulatory fees for licensees whose stations are bankrupt, undergoing Chapter 11 reorganizations or are in receivership.

12. We will also grant petitions for waivers of the regulatory fees on grounds of financial hardship from licensees of broadcast stations which are dark (not operating). When a station is dark, it generally is either without or with greatly reduced revenues. Moreover, broadcast stations which are dark must request permission to suspend operation pursuant to Section 73.1740(a)(4) of the Rules. 47 CFR 73.1740(a)(4). Petitions to go dark are generally based on financial hardship. Under these circumstances, imposition of the regulatory fees could be an impediment to the restoration of broadcast service, and it is unnecessary to require a licensee to make a further showing of financial hardship.

13. We will waive the regulatory fee for community-based translators if the licensee: (1) Is not licensed to, in whole or in part, and does not have common ownership with, the licensee of a commercial broadcast station; (2) does not derive income from advertising; and (3) is dependent on subscriptions or contributions from the members of the community served for support. Waivers will also ease the regulatory burden on these regulatees. However, the burden will remain on the translator licensees to document their eligibility for the waiver.

14. Congress in adopting the Schedule of Fees of FY 1994 did not distinguish between the fees for full service and satellite television stations. Thus, licensees with a full-service station and satellite stations, may be assessed with separate but identical fees for their full service stations and each of their supporting satellite stations. We find, however, that the regulatory fees can be particularly inequitable for licensees operating satellite stations. Thus, for those licensees that have timely filed petitions for reconsideration or for waiver or reduction of the regulatory fees for satellite stations, we will grant partial waivers and reduce the fees for licensees operating satellite stations so each set of parent and satellite stations will pay a regulatory fee based on the total number of television households served, and will be assessed a single regulatory fee comparable to the fee assessed stations serving markets with the same number of television households.

15. Withers Broadcasting Company of Texas also argues that the Commission

should reduce the regulatory fees for certain television stations operating in large markets, but which are part of that market only because the residents in the station's service area primarily view the market's principle city's stations. These stations are generally UHF stations, they lack network affiliations, and are located outside of the principle city's metropolitan area and do not provide a Grade B signal to a substantial portion of the market's metropolitan areas. Often these stations are not carried by cable systems serving the principal metropolitan areas. These stations will be assessed a fee based on the number of television households served, and will be charged the same fee as stations serving markets with the same number of television households. For example, stations that do not serve the principal metropolitan areas within their assigned markets and serve fewer than 242,000 television households will be assessed the same regulatory fee as stations not located in the top-100 markets. We will entertain requests for reductions in the regulatory fee assessments from those licensees that have filed timely petitions for waiver or reduction of the regulatory fee.

16. COMSAT General Corporation (COMSAT) petitioned the Commission to either reduce or waiver the regulatory fee for FY 1994 for its D–2 satellite. COMSAT deorbited its D–2 satellite on December 16, 1993, and *inter alia*, it urges the Commission to reduce proportionally the regulatory fee to reflect the limited period in which it was in operation. Fees are assessed on an annual basis and the Commission, will not issue pro rata refunds. COMSAT's request for a proportional reduction of the regulatory fee is denied. However, COMSAT's request for a waiver of the fee, as well as other requests for waivers discussed here, will be considered by the Office of Managing Director pursuant to its delegated authority to rule upon requests to waive, reduce or defer regulatory fees. 47 CFR 1.1166(a).

Ordering Clauses

17 Accordingly, it is ordered that the Petitions for Reconsideration identified in Appendix are granted to the extent indicated in the full text and in all other respects are denied.

18. It is further ordered that the rule changes as specified above and below are adopted.

19. It is further ordered that the rule changes made herein will become effective 60 days after publication in the **Federal Register**. This action is taken pursuant to Section 4(i), 4(j), 9 and 303(r) of the Communications Act, as amended, 47 U.S.C. 154(i), 154(j), 159 and 303(r).

Federal Communications Commission.

William F. Caton,

Acting Secretary.

List of Subjects in 47 CFR Part 1

Administrative practice and procedure.

Appendix

Petitions for Reconsideration were filed by:

Dennis C. Brown & Robert H. Schwaninger

Cellular Telecommunications Industry Association

Fant Broadcasting Company

Fireweed Communications

National Association of Broadcasters

NYNEX Corporation

Southwestern Bell Telephone Company

Sprint Corporation

Withers Broadcasting Company of Texas

Rule Change

Part 1 of Chapter I of Title 47 of the Code of Federal Regulations is amended as follows:

PART 1—PRACTICE AND PROCEDURE

1. The authority citation for Part 1 continues to read:

Authority: 47 U.S.C. 151, 154, 303, and 309(j) unless otherwise noted.

2. Section 1.1162 is amended by revising paragraph (c) to read as follows:

§ 1.1162 General exemptions from regulatory fees.

* * * * *

(c) Applicants and permittees who qualify as nonprofit entities. For purposes of this exemption, a nonprofit entity is defined as: an organization duly qualified as a nonprofit, tax exempt entity under section 501 of the Internal Revenue Code, 26 U.S.C. 501; or an entity with current certification as a nonprofit corporation or other nonprofit entity by state or other governmental authority.

* * * * *

[FR Doc. 95–16375 Filed 7–3–95; 8:45 am]

BILLING CODE 6712–01–M

DEPARTMENT OF COMMERCE

National Oceanic and Atmospheric Administration

50 CFR Parts 675 and 677

[Docket No. 950414105–5166–02; I.D. 033095A]

RIN 0648–AH69

Groundfish of the Bering Sea and Aleutian Islands Area; Chum Salmon Savings Area

AGENCY: National Marine Fisheries Service (NMFS), National Oceanic and Atmospheric Administration (NOAA), Commerce.

ACTION: Final rule.

SUMMARY: NMFS is implementing Amendment 35 to the Fishery Management Plan (FMP) for the Groundfish Fishery of the Bering Sea and Aleutian Islands Area (BSAI). This amendment prohibits the use of trawl gear in a specified area of the Bering Sea during the pollock non-roe season. Regulatory amendments also are implemented that would increase 1995 observer coverage for mothership processor vessels and for some shoreside processors receiving pollock harvested in the catcher vessel operational area (CVOA), and would require the mothership processor vessels and shoreside processors to obtain the capability for electronic transmission of daily observer reports. This action is necessary to reduce chum salmon bycatch amounts in the pollock fishery and is intended to promote the objectives of the FMP.

EFFECTIVE DATE: August 1, 1995.

ADDRESSES: Copies of Amendment 35 and the environmental assessment/regulatory impact review/final regulatory flexibility analysis (RIR/FRFA) prepared for Amendment 35 are available from the North Pacific Fishery Management Council, P.O. Box 103136, Anchorage, AK 99510; telephone: 907–271–2809.

FOR FURTHER INFORMATION CONTACT: Kaja Brix, 907–586–7228.

SUPPLEMENTARY INFORMATION: Fishing for groundfish by U.S. vessels in the exclusive economic zone of the BSAI is managed by NMFS according to the FMP for the Groundfish Fishery of the Bering Sea and Aleutian Islands Area. The FMP was prepared by the North Pacific Fishery Management Council (Council) under the Magnuson Fishery Conservation and Management Act (16 U.S.C. 1801 *et seq.*) (Magnuson Act), and is implemented by regulations governing the U.S. groundfish fisheries

at 50 CFR parts 675 and 676. General regulations that also pertain to U.S. fisheries are codified at 50 CFR part 620. Regulations governing observer coverage requirements for specified U.S. fisheries under the North Pacific Fisheries Research Plan (Research Plan) are codified at 50 CFR part 677.

In 1993, the total ''other'' (chum) salmon bycatch amount in the BSAI fisheries was 245,000 fish—approximately six times the bycatch level estimated for each of the previous 2 years and triple the previous highest bycatch amount of 72,000 ''other'' salmon estimated in the 1984 foreign trawl fishery. To reduce ''other'' salmon bycatch and address concerns for conservation of the salmon resource a specified area, the salmon savings area, which was renamed the chum salmon savings area (CSSA), was closed to trawling by emergency rule (59 FR 35476, August 15, 1994) during the 1994 pollock nonroe season. As in past years, vessels fishing in the CSSA in 1994 prior to closure of this area experienced a high ''other'' salmon bycatch rate. Continued fishing in the CSSA in 1994 would likely have led to higher bycatch rates than those seen after the closure. The CSSA has historically accounted for a large proportion of ''other'' salmon bycatch and a relatively small proportion of groundfish harvest.

A proposed rule to implement Amendment 35 to the FMP was published on April 25, 1995 (60 FR 20253). Public comment on the proposed rule was invited through June 5, 1995. A notice of availability for Amendment 35 was published in the **Federal Register** on April 6, 1995 (60 FR 17512). Comments on Amendment 35 were accepted through May 30, 1995. One letter indicating ''no comments'' was received within the comment period. NMFS is not making any changes from the proposed rule to the final rule and is implementing the following management measures.

1. The CSSA will be closed to all trawling for the month of August, with the closure continuing or being reinstated once a bycatch limit of 42,000 ''other'' salmon has been reached in the CVOA. Accounting for chum salmon bycatch attributable to the bycatch limit will begin on August 15. The CSSA will reopen to trawling on October 15. The closure area is defined by straight lines connecting the following coordinates in the order listed:

56°00′ N., 167°00′ W.;
56°00′ N., 165°00′ W.;
55°30′ N., 165°00′ W.;
55°30′ N., 164°00′ W.;
55°00′ N., 164°00′ W.;
55°00′ N., 167°00′ W.; and
56°00′ N., 167°00′ W.

2. Mothership processor vessels that receive pollock harvested in the CVOA during the 1995 pollock nonroe season will be required to carry two observers until the bycatch limit for ''other'' salmon is reached or until October 15, whichever occurs first. For the same period of time, those shoreside processing plants that also receive pollock harvested in the CVOA during the 1995 pollock nonroe season and that offload fish at two locations on the same dock and have distinct and separate equipment at each location to process those fish will also be required to have an extra observer. For 1996 and beyond, any observer coverage requirements for these vessels and shoreside plants would be implemented under the Research Plan.

3. Electronic communication capabilities will be required for each mothership processor vessel that receives pollock harvested in the CVOA during the pollock nonroe season and for each shoreside processing facility that receives pollock harvested from the CVOA during the pollock nonroe season and that is required to have 100–percent observer coverage under 50 CFR 677.10.

Classification

The Director, Alaska Region, NMFS, determined that the FMP amendment is necessary for the conservation and management of the Bering Sea and Aleutian Islands management area fisheries and that it is consistent with the Magnuson Act and other applicable laws.

The Council prepared an FRFA as part of the RIR. A copy of this analysis is available from the Council (see **ADDRESSES**).

This rule has been determined to be not significant for purposes of E.O. 12866.

List of Subjects in 50 CFR Parts 675 and 677

Fisheries, Reporting and recordkeeping requirements.

Dated: June 28, 1995.

Gary Matlock,

Program Management Officer, National Marine Fisheries Service.

For reasons set out in the preamble, 50 CFR parts 675 and 677 are amended as follows:

PART 675—GROUNDFISH OF THE BERING SEA AND ALEUTIAN ISLANDS AREA

1. The authority citation for part 675 continues to read as follows:

Authority: 16 U.S.C. 1801 *et seq.*

2. Section 675.22, paragraph (h) is added to read as follows:

§ 675.22 Time and area closures.

* * * * *

(h) *Chum Salmon Savings Area.* (1) Trawling is prohibited from August 1 through August 31 in the area defined by straight lines connecting the following coordinates in the order listed:

56°00′ N., 167°00′ W.;
56°00′ N., 165°00′ W.;
55°30′ N., 165°00′ W.;
55°30′ N., 164°00′ W.;
55°00′ N., 164°00′ W.;
55°00′ N., 167°00′ W.; and
56°00′ N., 167°00′ W.

(2) When the Regional Director determines that 42,000 nonchinook salmon have been caught by vessels using trawl gear during the time period of August 15 through October 14 in the catcher vessel operational area, defined in paragraph (g) of this section, NMFS will prohibit fishing with trawl gear for the remainder of the period September 1 through October 14 in the area defined under paragraph (h)(1) of this section.

3. Section 675.25 is revised to read as follows:

§ 675.25 Observer requirements.

(a) *General.* Bering Sea and Aleutian Islands management area groundfish observer requirements are contained in part 677 of this chapter.

(b) *Additional observer coverage requirements applicable through December 31, 1995.* (1) Each mothership processor vessel that receives pollock harvested by catcher vessels in the catcher vessel operational area, defined at § 675.22(g), during the second pollock season that starts on August 15 under § 675.23(e), is required to have a second NMFS-certified observer aboard, in addition to the observer required under § 677.10(a)(1)(i) of this chapter, for each day of the second pollock season until the chum salmon savings area is closed under § 675.22(h)(2).

(2) Each shoreside processor that offloads fish at more than one location on the same dock and has distinct and separate equipment at each location to process those fish and that receives pollock harvested by catcher vessels in the catcher vessel operational area, defined at § 675.22(g), during the second pollock season that starts on August 15, under § 675.23(e) is required to have a NMFS-certified observer, in addition to the observer required under § 677.10(a)(1)(i) of this chapter, at each location where fish is offloaded, for each day of the second pollock season until the chum salmon savings area is closed under § 675.22(h)(2).

PART 677—NORTH PACIFIC FISHERIES RESEARCH PLAN

4. The authority citation for part 677 continues to read as follows:

Authority: 16 U.S.C. 1801 *et seq.*

5. Section 677.10, paragraphs (c)(3) and (d)(3) are revised to read as follows:

§ 677.10 General requirements.

* * * * *

(c) * * *

(3) Facilitate transmission of observer data by:

(i) Allowing observers to use the vessel's communication equipment and personnel, on request, for the entry, transmission, and receipt of work-related messages, at no cost to the observers, the State of Alaska, or the United States;

(ii) Ensuring that each mothership that receives pollock harvested in the catcher vessel operational area, defined at § 675.22(g) of this chapter, during the pollock nonroe season that starts on August 15, is equipped with INMARSAT Standard A satellite communication capabilities, cc:Mail remote, and the data entry software, provided by the Regional Director, for use by the observer. The operator of each mothership processing vessel shall also make available for the observers' use the following equipment compatible therewith and having the ability to operate the NMFS-supplied data entry software program: A personal computer with a 486 or better processing chip, a DOS 3.0, or better operating system with 10 megabytes free hard disk storage and 8 megabytes RAM; and

(iii) Ensuring that the communication equipment that is on mothership processor vessels as specified at paragraph (c)(3)(ii) of this section, and that is used by observers to transmit data is fully functional and operational.

* * * * *

(d) * * *

(3) Facilitate transmission of observer data by:

(i) Allowing observers to use the shoreside processing facility's communication equipment and personnel, on request, for the entry, transmission, and receipt of work-related messages, at no cost to the observers, the State of Alaska, or the United States;

(ii) Ensuring that each shoreside processing facility that is required to have 100–percent observer coverage under § 677.10 and that receives pollock harvested in the catcher vessel operational area, defined at § 675.22(g) of this chapter, during the second pollock season that starts on August 15, under § 675.23(e) of this chapter, makes available to the observer the following equipment or equipment compatible therewith: A personal computer with a minimum of a 486 processing chip with at least a 9600–baud modem and a telephone line. The personal computer must be equipped with a mouse, Windows version 3.1, or a program having the ability to operate the NMFS-supplied data entry software program, 10 megabytes free hard disk storage, 8 megabytes RAM, and with data entry software provided by the Regional Director for use by the observers; and

(iii) Ensuring that the communication equipment that is in the shoreside processing facility as specified at paragraph (d)(3)(ii) of this section, and that is used by observers to transmit data is fully functional and operational.

* * * * *

[FR Doc. 95–16363 Filed 6–29–95; 12:59 pm]

BILLING CODE 3510–22–F

Proposed Rules

Federal Register
Vol. 60, No. 128
Wednesday, July 5, 1995

This section of the FEDERAL REGISTER contains notices to the public of the proposed issuance of rules and regulations. The purpose of these notices is to give interested persons an opportunity to participate in the rule making prior to the adoption of the final rules.

DEPARTMENT OF THE TREASURY

Office of the Comptroller of the Currency

12 CFR Parts 20 and 28

[Docket No. 95–13]

RIN 1557–AB26

International Banking

AGENCY: Office of the Comptroller of the Currency, Treasury.

ACTION: Notice of proposed rulemaking.

SUMMARY: The Office of the Comptroller of the Currency (OCC) is proposing to revise its regulations governing the international operations of national banks and the operation of foreign banks through Federal branches and Federal agencies in the United States. The proposal is part of the OCC's Regulation Review Program, which seeks to simplify OCC regulations and reduce compliance costs, consistent with maintaining safety and soundness. The proposal streamlines and consolidates into one CFR part substantially all provisions relating to international banking that were previously included in 12 CFR parts 20 and 28, and clarifies and simplifies their various requirements.

The proposal also updates the rules to implement provisions of the Foreign Bank Supervisory Enhancement Act of 1991 (FBSEA) and the Riegle-Neal Interstate Banking and Branching Efficiency Act of 1994 (Interstate Act) relating to Federal branches and agencies.

DATES: Comments must be received by September 5, 1995.

ADDRESSES: Comments should be directed to: Communications Division, 250 E Street SW, Washington, DC 20219, Attention: Docket No. 95–13. Comments will be available for public inspection and photocopying at the same location.

FOR FURTHER INFORMATION CONTACT: Raija Bettauer, Counselor for International Activities, (202) 874–0680; Manpreet Singh, Attorney, International Activities, (202) 874–0680; Timothy M. Sullivan, Director, International Banking and Finance, (202) 874–4730.

SUPPLEMENTARY INFORMATION:

Background

The OCC is proposing comprehensive revisions to its international regulations (12 CFR parts 20 and 28) as part of its Regulation Review Program (Program). The goal of the Program is to review all of the OCC's rules and to eliminate provisions that impose unnecessary regulatory burdens and do not contribute significantly to maintaining the safety and soundness of national banks or to accomplishing the OCC's other statutory responsibilities. Another goal is to improve clarity and to better communicate the standards that the rules intend to convey. The proposed revisions also update the OCC's rules to implement provisions in the FBSEA (Pub. L. 102–242, title II, 105 Stat. 2286) and Interstate Act (Pub. L. 103–328, 108 Stat. 2338) relating to Federal branches and Federal agencies of foreign banks, and add a mechanism for the OCC to obtain information on foreign banking organizations to improve the OCC's safety and soundness oversight of Federal branches and agencies.

The proposal reduces regulatory burden on national banks and Federal branches and agencies by eliminating regulatory requirements that are not essential to maintaining the safety and soundness of their operations. The proposal also reduces the complexity of the existing statutory framework for international banking by referencing and dovetailing with, as much as possible, provisions in the regulations of the Board of Governors of the Federal Reserve Board (FRB) and the Federal Deposit Insurance Corporation (FDIC).

Discussion

By updating the OCC's international banking regulations, the proposal makes the regulations more useful in providing guidance on issues arising in today's international banking context. The proposal furthers the goals of the OCC's Regulation Review Program by simplifying and clarifying applicable requirements, and by reducing regulatory duplication and complexity by promoting interagency regulatory uniformity.

The proposal consolidates into a single comprehensive international regulation the substantive requirements governing international banking operations supervised by the OCC. Currently, the OCC's international regulations appear in three different CFR parts: part 28 for Federal branches and Federal agencies; part 20 for international operations of national banks and international lending supervision; and part 5 for provisions specifically addressing corporate applications of Federal branches and Federal agencies. The proposal consolidates all substantive international banking provisions into part 28, including the provisions currently located in part 20 relating to foreign operations of national banks.

The OCC welcomes comments on the advisability of reorganizing its international banking regulations into part 28, and solicits suggestions regarding alternative organizational approaches that would be easier to use.

Because subpart B of part 20, regarding international lending supervision, was originally promulgated as an interagency rulemaking, no substantive changes are proposed to be made to the subpart at this time. The OCC will coordinate with the other agencies before making any changes to subpart B. In the interim, current subpart B of part 20 is relocated and incorporated as subpart C of part 28. Commenters may still comment on the subpart, however, in order to bring particular issues to the OCC's attention at this time.

The procedural requirements of part 5 continue to apply to Federal branches and Federal agencies, unless otherwise provided, and part 28 cross-references the procedural requirements in part 5, as appropriate. The revision of the Comptroller's Corporate Manual will also provide an opportunity to provide additional and more comprehensive guidance on the application of the general corporate regulations to the foreign bank context.

The OCC invites comment on the best means and extent of guidance needed regarding corporate applications by Federal branches and Federal agencies.

The discussion below identifies and explains significant proposed changes to the current requirements in parts 20 and 28. A derivation table comparing the sections of proposed part 28 to those of

the current parts 20 and 28 follows this section of the preamble.

The OCC requests general comments on all aspects of the proposed regulation as well as comments on specific changes in the rules.

Subpart A—Foreign Operations of National Banks

Authority, Purpose, and Scope (Section 28.1)

The proposal relocates and consolidates the current § 20.1, ''Authority and policy'', into part 28. The provisions of subpart A apply to all national banks that engage in international operations through a foreign branch, or acquire an interest in an Edge corporation, Agreement corporation, foreign bank, or certain other foreign organizations.

Definitions (Section 28.2)

The proposal updates and revises definitions applicable to foreign operations of national banks to reflect the OCC's current practice, and to be consistent with the definitions adopted by the FRB in 12 CFR part 211, subpart A (International Operations of United States Banking Organizations) (Regulation K). The proposal adds the definitions of ''foreign branch'' and ''foreign country'', and updates the definition of ''foreign bank.''

Foreign Bank (Section 28.2(c))

The proposal defines ''foreign bank'' as an organization that is organized under the laws of a foreign country, engages in the business of banking, is recognized as a bank by the home country supervisor, receives deposits, and has the power to accept demand deposits. This is modelled on the definition in Regulation K.

Foreign Branch (Section 28.2(d))

The proposal includes a new definition to define the term ''foreign branch'' as it is used in proposed § 20.3, ''Filing requirements for foreign operations of national banks.'' The proposal defines ''foreign branch'' as an office of a national bank that is located outside the United States at which banking or financial business is conducted. This definition is modelled on the definition in Regulation K.

Foreign Country (Section 28.2(e))

The definition of the term ''foreign country'' is also new. The proposal defines ''foreign country'' as one or more foreign nations, and includes the overseas territories, dependencies, and insular possessions of those nations and of the United States, and Puerto Rico. This definition is similar to the definition in Regulation K.

Filing Requirements for Foreign Operations of National Banks (Section 28.3)

The proposal requires a national bank to notify the OCC when it opens, relocates, or closes a foreign branch. This is necessary and desirable in order for the OCC to supervise consolidated national bank operations. The national bank may satisfy this requirement by providing the OCC with a copy of the appropriate filing made with the FRB. Thus, while the proposal may require notification in some instances where it is not currently required, it does not require a bank to fill out new reports. The proposal also removes the requirement for two separate filings that national banks must make currently when they establish a foreign branch or acquire certain foreign investments.

The proposal removes the requirement for reports on certain foreign exchange activities, currently found at § 20.5. The FRB's current reporting requirements for member banks requires comparable information and the reports described in current § 20.5 are not, therefore, necessary for OCC's bank supervisory purposes, since the OCC may obtain the reports from the FRB.

Permissible Activities (Section 28.4)

The proposal clarifies that a national bank may engage abroad in any activity that is available to it domestically and that is usual in connection with the banking business at the foreign location where the national bank transacts business. The proposal also notes that under Regulation K, a national bank may engage in other activities approved by the FRB. Pursuant to section 25 of the Federal Reserve Act (FRA) (12 U.S.C. 604a), the FRB also may authorize foreign branches of member banks to exercise powers that are consistent with the charter of the bank and are usual in the banking business at the location where the branch operates. The OCC's examination and supervision of national banks currently includes these overseas branches and activities.

The proposal also restates the provision previously found at 12 CFR 7.7012 regarding the permissibility of national bank guarantees of liabilities of its Edge corporations and other foreign operations. In connection with revising 12 CFR part 7, the OCC determined that this provision would be more logically placed in the international regulation.

Liability of National Banks for Foreign Branch Deposits

Section 326 of the Riegle Community Development and Regulatory Improvement Act of 1994 (CDRI Act) (12 U.S.C. 633), limits a United States bank's liability for deposits in its foreign branches in case of a sovereign action by the foreign country in question, or in cases of war, insurrection, or civil strife. This provision was included in the CDRI Act because the issue of liability for foreign branch accounts in the past has been a subject of protracted litigation. The CDRI Act permits the OCC and FRB to prescribe regulations as they deem necessary to implement this section.

The OCC invites comment on whether regulatory guidance or clarification is needed to implement the statutory provision. The comments should set forth in detail the subject areas or terms, such as ''inability to repay'' and ''due to'', for which guidance and clarification may be needed and recommendations for that guidance and clarification.

Subpart B—Federal Branches and Agencies of Foreign Banks

Authority, Purpose, and Scope (Section 28.10)

The proposal updates current § 28.1, ''Scope'', to include and clarify the authority and purpose of this subpart. The proposal clarifies that this subpart implements and clarifies the International Banking Act of 1978 (IBA) (12 U.S.C. 3101 *et seq.*), pertaining to the licensing, supervision, and operations of Federal branches and agencies of foreign banks in the United States.

Definitions (Section 28.11)

The proposal revises this section to add several definitions and update others. The changes assist in the implementation of new statutory requirements and make the OCC's regulations more consistent with FRB and FDIC regulations. By promoting uniformity among bank regulatory agencies, these changes reduce the burden of compliance with different sets of applicable regulations. The proposal adds or updates the following key definitions:

Change the Status (Section 28.11(b)) and Establish (Section 28.11(d))

These are new definitions describing the corporate activities for which OCC approval is required. The proposal defines ''change the status'' of an office to include conversion from a state branch or state agency to a Federal

branch, Federal agency, or limited Federal branch, and from a Federal branch, Federal agency, or limited Federal branch to another Federal office (branch, limited branch, or agency).

The proposal defines ''establish'' as opening and engaging in business at a new Federal branch or Federal agency. It also includes the acquisition of a Federal branch or agency through a merger, consolidation, or similar transaction with another foreign bank or a foreign bank subsidiary, and various conversions and relocations within a state, or from one state to another.

Federal Agency (Section 28.11(e))

The proposal makes this definition consistent with the definition in Regulation K and the IBA by clarifying that a Federal agency may maintain credit balances, cash checks, and lend money, but generally may not accept deposits from citizens or residents of the United States. Usage of the term ''credit balances'' is also consistent with Regulation K.

Federal Branch (Section 28.11(f))

The proposal makes this definition consistent with the definition in Regulation K and the IBA by clarifying that a Federal branch is an office licensed by the OCC that is not a Federal agency as defined in proposed § 28.11(e).

Foreign Bank (Section 28.11(g))

The proposal makes this definition consistent with the definition in Regulation K and the IBA by clarifying that a foreign bank is an organization that is organized under the laws of a foreign country, a territory of the United States, Puerto Rico, Guam, American Samoa, or the Virgin Islands, and that engages directly in the business of banking outside the United States.

Foreign Business (Section 28.11(h))

This new definition clarifies the term ''foreign business'' as it is used in proposed § 28.16, ''Deposit-taking by uninsured Federal branches'', which permits uninsured Federal branches to accept initial deposits of less than $100,000 from a ''foreign business''. The proposed definition attempts to balance Congress' concern that foreign banks not receive an unfair advantage over United States banks by engaging in retail deposit-taking through uninsured branches and the importance of maintaining credit availability to all sectors of the United States economy, including international trade finance.

The proposal defines ''foreign business'' to mean any entity, including a corporation, partnership, sole proprietorship, association, or trust that is organized under the laws of a foreign country, or any United States entity that is controlled by a foreign entity or foreign national. A foreign entity or foreign national shall be deemed to control a United States entity if the foreign entity or individual directly controls, or has the power to vote 25 percent or more of any class of voting securities of, the United States entity or controls in any manner the election of a majority of the directors or trustees of the other entity.

This definition accommodates businesses owned by foreign nationals who are residents of the United States and concerned about credit availability to their businesses. These businesses may prefer to do business with a branch of a foreign bank from their home country regardless of whether the branch is FDIC insured.

The OCC specifically invites commenters to address the scope of this definition.

Foreign Country (Section 28.11(i))

This new definition clarifies the term ''foreign country'' as used in this subpart to mean one or more foreign nations, and includes the overseas territories, dependencies, and insular possessions of those nations and of the United States, and the Commonwealth of Puerto Rico.

Home Country (Section 28.11(j))

This new definition clarifies the term ''home country'' as used in proposed § 28.12, and is similar to the definition in Regulation K. The proposal defines ''home country'' as the country in which the foreign bank is chartered or incorporated.

Home Country Supervisor (Section 28.11(k))

This new definition clarifies the term ''home country supervisor'' as it is used in proposed § 28.12, and is similar to the definition in Regulation K. The proposal defines ''home country supervisor'' as the governmental entity or entities in the foreign bank's home country with responsibility for supervising and regulating the foreign bank.

Home State (Section 28.11(l))

This new definition of ''home state'', as it is used in proposed § 28.17, is consistent with the description of ''home state'' in section 104(d) of the Interstate Act amending section 5(c) of the IBA, 12 U.S.C. 3103(c). The proposal defines ''home state'' to mean the state in which the foreign bank has an office. If a foreign bank has an office in more than one state, the home state of the foreign bank is one state of those states that is selected to be the home state by the foreign bank or, in default of such selection, by the FRB. The FRB's Regulation K, 12 CFR 211.22(b), also permits a foreign bank to change its home state designation once by providing 30 days prior notice to the FRB.

Initial Deposit (Section 28.11(m))

This new definition clarifies the term ''initial deposit'' as used in proposed § 28.16, and is similar to the definition found in the comparable FDIC regulation, 12 CFR 346.1(k). The proposal defines ''initial deposit'' to mean the first deposit transaction between a depositor and the branch made on or after the effective date of this regulation. The initial deposit may be placed into different deposit accounts or into different kinds of deposit accounts, such as demand, savings, or time accounts. Deposit accounts that are held by a depositor in the same right and capacity may be added together for the purpose of determining the dollar amount of the initial deposit.

International Banking Facility (Section 28.11(n))

This new definition clarifies the term ''International banking facility'' as it is used in proposed § 28.20, and incorporates the definition found in 12 CFR 204.8. The proposal defines ''international banking facility'' to mean a set of asset and liability accounts segregated on the books and records of a bank, a United States branch or agency of a foreign bank, or an Edge or Agreement Corporation, that includes only international banking facility time deposits and extensions of credit.

Large United States Business (Section 28.11(o))

This new definition clarifies an exception to the general prohibition of deposit taking by Federal branches in proposed § 28.16, which permits uninsured Federal branches to accept initial deposits of less than $100,000 from ''large United States businesses''. The proposal attempts to balance Congress' concern that foreign banks not receive an unfair competitive advantage over United States banks by engaging in retail deposit-taking through uninsured branches and the importance of maintaining credit availability to all sectors of the United States economy. There does not appear to be a commonly-accepted or standard definition for a ''large business''. Therefore, the proposal describes

alternative criteria for determining whether a business is a ''large United States business'' for purposes of proposed § 28.16.

The proposal defines ''large United States business'' to mean any business entity that is organized under the laws of the United States, and (1) the securities of which are registered on a national securities exchange or quoted on the National Association of Securities Dealers Automated Quotation System; *or* (2) has more than $1.0 million in annual revenues for the fiscal year preceding the year of the initial deposit. The OCC believes that this definition meets the Congress' concern without having a negative impact on the competitive position of foreign and United States banks and the availability of credit to all sectors of the United States economy.

Commenters are requested to provide detailed comments on this definition, including the appropriateness of the criteria, or alternative criteria.

Managed or Controlled (Section 28.11(q))

This new definition clarifies the term ''managed or controlled'' as used in proposed § 28.13. The definition is consistent with the definition used for the purposes of determining which entities must file the Supplement (FFIEC 002S) to the Report of Assets and Liabilities of United States Branches and Agencies of Foreign Banks (FFIEC 002). The proposal defines ''managed or controlled'' to mean that a majority of the responsibility for business decisions, including decisions with regard to lending or asset management or funding or liability management, or the responsibility for recordkeeping in respect of assets or liabilities for that non-United States office, resides at the United States branch or agency.

The OCC invites comment on whether to adopt this definition or some other definition of ''managed or controlled''.

Parent Foreign Bank Senior Management (Section 28.11(s))

This new definition clarifies the term ''parent foreign bank senior management'' as that term is used in proposed § 28.13(c). The proposal defines ''parent foreign bank senior management'' to mean individuals at the executive level of the parent foreign bank who are responsible for supervising and authorizing activities at the Federal branch or Federal agency.

Approval of Federal Branches and Federal Agencies (Section 28.12)

The proposal updates and clarifies the applicable criteria for OCC approval of the establishment of a Federal branch, Federal agency, or a limited Federal branch. In reviewing an application by a foreign bank to establish a Federal branch or Federal agency, the OCC will consider the criteria listed in sections 4(c) and 7(d) of the IBA, 12 U.S.C. 3102(c) and 3105(d). These criteria include the financial and managerial resources and future prospects of the applicant foreign bank and the Federal branch or Federal agency, information necessary to process the application, assurances regarding the prospective availability of information necessary for supervisory purposes, compliance with applicable United States law, competitive effects, the home country supervisor's consent to the proposed establishment of the Federal branch or Federal agency, and the extent of consolidated and comprehensive supervision and regulation by the home country supervisor of the applicant foreign bank.

In 1991, the FBSEA added section 7(d) to the IBA, 12 U.S.C. 3105(d), listing mandatory and discretionary criteria that the FRB was to apply in approving applications by foreign banking organizations. Many of the discretionary criteria, such as the financial and managerial resources, consent of the home country supervisor, prospective availability of information, and compliance with law are consistent with factors already considered by the OCC as a matter of practice and supervisory discretion. The proposal clarifies that the OCC continues to consider these criteria in the approval process. The FBSEA's mandatory requirement at 12 U.S.C. 3105(d) for the FRB regarding the consolidated and comprehensive supervision of the applicant bank by its home country supervisor generally is consistent with, although more stringent than, the Minimum Standards for the Supervision of International Banking Groups recommended by the Basle Committee on Banking Supervision. The proposal notes that the OCC considers, as part of its approval criteria, the extent to which the applicant foreign bank is subject to comprehensive and consolidated supervision and regulation by its home country.

The proposal also streamlines procedures for certain intrastate relocation, conversion, and fiduciary activities applications by eligible foreign banks for Federal branches and Federal agencies. An application by an eligible foreign bank to convert its Federal agency, Federal branch, or limited Federal branch to another Federal office (branch, limited branch, or agency) is deemed approved 45 days after filing with the OCC, unless the OCC notifies the bank prior to that date that the filing is not eligible for expedited approval. An application by an eligible foreign bank to exercise fiduciary powers at an established Federal branch shall be deemed approved 30 days after filing, unless the OCC notifies the bank prior to that date that the filing is not eligible for expedited approval. Expedited processing is not available if the OCC concludes that the filing presents significant supervisory or compliance concerns, or raises significant legal or policy issues.

For purposes of this section, a foreign bank is an ''eligible foreign bank'' if each Federal branch and Federal agency of the foreign bank in the United States: (1) has a composite rating of 1 or 2 under the rating system for United States branches and agencies of foreign banking organizations; (2) is not subject to a cease and desist order, consent order, formal written agreement, or Prompt Corrective Action directive (*see* 12 CFR part 6) or, if subject to such order, agreement, or directive, is informed in writing by the OCC that the parent foreign bank may be treated as an ''eligible foreign bank'' for purposes of this section; and (3) has, if applicable, a Community Reinvestment Act (CRA), 12 U.S.C. 2906, rating of ''Outstanding'' or ''Satisfactory''.

Twelve CFR part 5 contains procedural provisions applicable to Federal branches and Federal agencies. The proposal cross-references part 5 and also refers applicants to the Comptroller's Corporate Manual for additional clarification.

Permissible Activities (Section 28.13)

The proposal restates the current provision regarding the applicability of domestic law to Federal branches and Federal agencies. The OCC believes that it is not practical to provide more detailed guidance on this aspect in a regulation, and will instead use other vehicles to provide necessary clarification about the applicability of various statutes, regulations, and supervisory policies to Federal branches and Federal agencies.

The OCC specifically invites comment on forms of supplemental guidance that would be most useful.

The proposal also clarifies the OCC's current policy that the senior management of the parent bank generally must approve a decision where an applicable statute requires approval by the board of directors of a national bank.

The proposal adds a new provision to implement the provisions of the Interstate Act regarding the ability of a

United States branch or agency of a foreign bank to manage the foreign bank's offshore office activities. The Interstate Act amended the IBA, 12 U.S.C. 3105(k), to limit a branch or agency of a foreign bank to managing only those types of activities at its offshore offices that a United States bank is permitted to manage at its offshore branch or subsidiary. This prohibition applies only to those offshore offices that are ''managed or controlled'' by a foreign bank's United States branches or agencies, and the proposal defines this phrase, as discussed in the definitions section (§ 28.11(p)). Accordingly, the proposed restrictions only apply to those offshore offices for which a United States branch or agency has substantial responsibility with regard to assets or liabilities or recordkeeping.

The OCC believes that a determination that the restrictions apply should be made based on where substantive decision making authority or responsibility lies. For example, a United States branch or agency would be deemed to manage or control an offshore office if: (1) the manager for both the United States branch or agency and the offshore office are the same person or there is other significant overlap in personnel; (2) substantial responsibility for decisions regarding either assets or liabilities of the offshore office resides with staff in the United States office; or (3) recordkeeping systems for either assets or liabilities of the offshore office are maintained in the United States office. The proposed restrictions generally would not apply with respect to offshore offices that are operating facilities managed and controlled by staff located at the offshore office or at locations other than the United States.

The types of activities that United States branches or agencies of foreign banks may manage through a controlled offshore office are the same types of activities that a United States bank may manage at its foreign branch or subsidiary. These include activities permissible under the bank's charter and applicable regulations. In addition, foreign branches and subsidiaries of national banks may, to the extent permissible in the relevant offshore location, engage in activities and make investments under sections 25 and 25(a) of the FRA, 12 U.S.C. 601 through 604a and 12 U.S.C. 611 through 631, respectively.

The OCC invites comment on this new provision, including whether the procedural or quantitative supervisory requirements that may apply to an activity by a United States bank at its foreign branches or subsidiaries should also apply to the United States branch or agency of the foreign bank in this context.

Finally, the proposal adds a new provision regarding the application of section 7(h) of the IBA, 12 U.S.C. 3105(h). The FBSEA amended section 7 to provide that, unless the appropriate Federal banking agencies determine otherwise, a state branch or state agency may not engage in any type of activity that is not permissible for a Federal branch. The proposal clarifies that the OCC may issue opinions, interpretations, or rulings regarding the types of activities permissible for Federal branches. Thus, the OCC may respond to relevant inquiries by providing the OCC position in instances where there is no explicit statutory provision, current regulation, or precedent regarding permissible activities for Federal branches, in order to assist in determining whether those activities are permissible for state branches and state agencies pursuant to section 7(h).

Limitations Based on Capital of Foreign Banks (Section 28.14)

The proposal clarifies that a foreign bank's capital must be calculated in a manner similar to a national bank's capital, i.e., consistent with 12 CFR part 3. However, foreign banks' financial statements may not readily lend themselves to a calculation that results in determining its ''part 3 capital'', particularly since the Basle risk-based capital standards have not been adopted globally. Therefore, the OCC expects that this provision often will require case-by-case application, and it will exercise discretion in implementing this provision.

The proposal also requires that the business transacted by all Federal branches and Federal agencies be aggregated with business transacted by all state branches and state agencies in determining the foreign bank's compliance with limitations based upon the capital of the foreign bank. This approach parallels the requirements applicable to state-licensed branches and agencies.

The OCC invites comments on this aspect of the proposal.

Capital Equivalency Deposits (CED) (Section 28.15)

The proposal restates the current provision that eligible CED instruments for Federal branches and Federal agencies include dollar deposits or investment securities that are permissible investments for a national bank. The proposal also permits high-grade commercial paper and bankers' acceptances, as functional equivalents of deposits. In the past, the OCC has noted that the quality of bank certificates of deposit offered as CED has occasionally been questionable or difficult to ascertain. Also, the securities used as CED may be very volatile or difficult to price at market value. Therefore, the proposal requires that the CED securities be marketable and, if not priced in a published source (such as the Wall Street Journal or the Financial Times), be priced by an independent pricing service at least quarterly. The proposal also authorizes the OCC to disallow, on a case-by-case basis, specific certificates of deposit or securities. As a general rule, the proposal parallels in many respects asset pledge requirements that apply to state branches and agencies, such as those operating in New York.

Deposit-Taking by Uninsured Federal Branches (Section 28.16)

The proposal implements amendments to section 6 of the IBA regarding deposit-taking by uninsured Federal branches, 12 U.S.C. 3104. First, section 214 of the FBSEA, as amended by section 302(a) of the Defense Production Act Amendments of 1992 (Pub. L. 102–558, 106 Stat. 4198), amended section 6 of the IBA in 1991 to generally prohibit a foreign bank from establishing any new branches that take domestic retail deposits of less than $100,000. Subsequently, section 107(b) of the Interstate Act amended the IBA to require the OCC and the FDIC, after consultation with the other Federal banking agencies, to revise their regulations regarding deposit-taking by uninsured branches. The objective of this amendment was to ensure that foreign banks do not enjoy an unfair competitive advantage over United States banks through their remaining ability to accept certain types of deposits. At the same time, the Congress was concerned about, and required the bank regulatory agencies to consider, any negative impact that further restrictions in this regard might have on maintaining and improving the credit availability to all sectors of the United States economy, including trade finance.

Section 107(b) of the Interstate Act requires the OCC and the FDIC, in reviewing their regulations, to consider whether to permit an uninsured branch of a foreign bank to accept initial deposits of less $100,000 only from the six types of customers specified in the statute. The OCC notes that the Interstate Act does not require the OCC to implement the six exemptions

described in the Interstate Act verbatim, or only just those six. Rather, the statute specifically provides that the OCC ''shall consider whether to permit'' uninsured branches to accept initial deposits of less than $100,000 from the enumerated exemptions, and also consider the importance of maintaining and improving credit availability to all sectors of the United States economy, including international trade finance. By inviting the agencies to consider the enumerated exemptions, Congress intended the agencies to utilize their expertise in implementing this provision.

The Interstate Act also provides that the agencies must reduce, from the current 5 percent of average branch deposits, to no more than 1 percent, the exemption that allows uninsured branches to accept initial deposits of less than $100,000 from any party on a de minimis basis. The agencies also are allowed to establish reasonable transition rules to facilitate termination of any deposit taking activity that previously was permissible.

The OCC has carefully considered Congress' concern that foreign banking organizations not receive an unfair competitive advantage over United States banking organizations. An OCC study conducted in 1994, entitled ''Are Foreign Banks Out-Competing U.S. Banks in the U.S. Market?'' (OCC Study), found that although the market share of foreign-owned banks (subsidiaries, branches, and agencies) in the United States grew during the 1980s and early 1990s, foreign-owned banks in the United States, including Federal branches and agencies, persistently underperformed United States banks as measured by profitability, efficiency, and, recently, credit quality. In addition, the OCC has reviewed data that updates available figures on the deposit taking activities of uninsured United States branches of foreign banks. As of year-end 1994, these offices of foreign banks held $386 billion of total deposits, which funded just over half of the total United States assets of these offices. All available data relating to these deposits suggest that, as a group, uninsured United States offices of foreign banks do not compete for retail deposits. Of the total deposits accepted by these offices, 78 percent were accepted from other banks or non-United States entities. The data also suggests that these uninsured offices obtain less than 2 percent of their total funding from small deposits.

The proposal states the OCC policy to interpret and implement the relevant statutory provisions in view of the Congressional concerns that prompted the IBA amendment, such as ensuring equal competitive opportunities among United States and foreign banks and credit availability to all sectors of the economy, including trade finance. The proposal provides that an uninsured Federal branch may accept initial deposits of less than $100,000 from the six types of customers specified in the Interstate Act. The proposal also includes certain other relationships within the exemptions, where those relationships appear to be consistent with the purposes of the Act. Proposed § 28.16(b)(3) permits an uninsured branch to accept deposits from persons with whom the branch or foreign bank has a written agreement to extend credit or provide nondeposit banking services within 12 months after the date of the initial deposit. This approach recognizes that in a banking relationship, a deposit may, in some cases, precede the extension of credit or providing of other nondeposit banking services by the branch or foreign bank. Proposed § 28.16(b)(6) also permits an uninsured branch to accept deposits from Federal and state governmental units. The data described earlier suggests that the ability of uninsured branches of foreign banks to accept deposits from Federal and state governments does not confer an unfair competitive advantage to uninsured branches of foreign banks compared to domestic banking organizations. Proposed § 28.16(b)(8) permits an uninsured branch to accept deposits from persons that may deposit funds with an Edge corporation pursuant to Regulation K, 12 CFR 211.4 (generally including foreign persons, foreign governments, and other persons engaged in international business activity). This exemption is consistent with the Congressional concern not to impair international trade or trade finance.

The OCC invites comment on the proposed categories of exemptions. If additional exemptions are suggested, the commenters are requested to specify why the additional exemption is needed and its impact on the United States and foreign banks' competitive opportunities, as well as on improving credit availability in the United States.

In addition, the proposal includes the 1 percent *de minimis* exemption, and provides for criteria and procedure for requesting additional exemptions. Currently, the *de minimis* amount is based on the average daily deposits of the branch for the last thirty days of the previous calendar quarter. The OCC solicits comment on streamlining and simplifying the method for calculating the *de minimis* amount, such as basing the *de minimis* amount on the branch's average deposits calculated using the branch's deposits at the end of each month for the previous calendar quarter. The commenters are requested to address whether that alternative approach, or any other, would reduce regulatory burden while still providing a reliable indicator of compliance with the *de minimis* amount.

The OCC also is considering extending the exemption in § 28.16(b)(3) to permit uninsured Federal branches to accept deposits from persons, *and their affiliates*, to whom the branch, foreign bank, *or any financial institution affiliate* thereof has extended credit or provided other non-deposit banking services within the past 12 months, or with whom the branch, bank, *or financial institution affiliate* has a written agreement to extend credit or provide such services. The term ''affiliate'' might be defined to mean any entity (including an individual) that controls, is controlled by, or is under common control with, another entity. An entity would be deemed to control another entity if the entity directly controls or has the power to vote 25 percent or more of any class of voting securities of the other entity, or controls in any manner the election of a majority of the directors or trustees of the other entity. The term ''financial institution'' could be defined to mean any depository institution, depository institution holding company, or foreign bank as those terms are defined in section 3 of the Federal Deposit Insurance Act, 12 U.S.C. 1813, any broker or dealer, or futures commission merchant as defined in 12 U.S.C. 4402, and any investment advisor.

These additional exemptions may be warranted by the close connection among the foreign entity's various components. For instance, affiliates of the foreign bank and its depositors may prefer to do business with a branch of the foreign bank with which they have a direct or indirect relationship. This deposit relationship may, in some cases, precede the extension of credit or providing of other nondeposit banking services by the branch, foreign bank, or financial institution affiliate.

The OCC is also considering adding a new exemption, not specified in the Interstate Act, that permits uninsured branches, as a matter of convenience to its customers, to accept deposits from immediate family members of individuals that may qualify for an exemption under § 28.16(b)(1) through (b)(7).

The OCC requests comment on extending the proposed exemption in the above manner. Commenters are requested to specify the effect on competitive opportunities among

United States and foreign banks and credit availability to all sectors of the economy as a result of the extension.

The Interstate Act permits the OCC to establish reasonable transition rules to facilitate termination of any deposit-taking activity that previously was permissible. The proposal provides for a five-year transition period for existing transaction accounts. The transition period for a time deposit is proposed to be until the maturity of the deposit. Thus, an uninsured branch may not retain deposits accepted before the effective date of this section for longer than five years or, in the case of time deposits, until maturity of the deposit, unless the deposit falls within a new exemption under paragraph (b) or is granted an exception by the OCC under paragraph (c).

Deposits received after the effective date of the regulation would be regarded as initial deposits that must qualify under one of the new exemptions, or be accepted under the new 1 percent *de minimis* exemption. With regard to the *de minimis* exemption, uninsured Federal branches will start with a clean slate, i.e. the new 1 percent limit will apply prospectively. It will exclude deposits in the existing 5 percent *de minimis* account that are phased out, as described above.

The OCC invites comment on this transition rule. If an alternate approach is recommended, commenters are requested to detail whether the alternate imposes a recordkeeping burden on uninsured branches and the extent of the burden, particularly in comparison to the approach contained in the proposal.

Changes in Activities and Operations (Section 28.17)

The proposal adds a new provision to clarify the OCC's current policy regarding certain changes in activities and operations. The proposal requires a Federal branch or Federal agency simply to provide a notice to the OCC when it changes its corporate title or mailing address, converts to a state branch, state agency, or a representative office, or when its parent foreign bank changes its home state designation.

Recordkeeping and Reporting. (Section 28.18)

The proposal reorganizes and clarifies the recordkeeping and reporting requirements in current § 28.10 for Federal branches and Federal agencies. The proposal restates current OCC policy and practice that the OCC may require a parent foreign bank to provide the OCC with the information regarding its affairs. The proposal also adds a specific requirement that a foreign bank operating a Federal branch or Federal agency in the United States provide the OCC with a copy of regulatory reports designated by the OCC that are filed with other Federal regulatory agencies. These reports may be necessary for the OCC to effectively supervise Federal branches and agencies. The OCC believes that asking only for copies of information that is already prepared to satisfy existing requirements for other United States regulators would preclude the need, in most cases, to impose new report-preparation requirements on Federal branches and agencies.

The proposal also clarifies the current requirement that a Federal branch or Federal agency maintain a set of accounts and records in English reflecting all transactions on a daily basis. To eliminate unnecessary burden and translation costs, the proposal does not require that all records be maintained in English; however, a Federal branch or Federal agency must maintain sufficient records in English to permit examiners to perform their responsibilities.

Enforcement (Section 28.19)

The proposal clarifies the OCC's enforcement authority, pursuant to 12 U.S.C. 3108(b), to bring actions under 12 U.S.C. 1818 for violations of the IBA in addition to any other remedies provided by the IBA or any other law.

Maintenance of Assets (Section 28.20)

The proposal amplifies and clarifies the current asset maintenance requirement for Federal branches and Federal agencies contained in the IBA and current § 28.9. The proposal contains provisions regarding the minimum amount of required assets, valuation of assets, and eligibility of assets for asset maintenance purposes. The proposal is in most respects identical to the FDIC's asset maintenance requirements for insured branches 12 CFR 346.20. The proposed provision is also similar to the comparable provisions in the New York state banking law and regulations.

In the past, the OCC has imposed asset maintenance requirements in a few cases as a condition of licensing and has exercised this authority in connection with certain enforcement actions. In the future, the asset maintenance requirement may increase in importance as a tool that the OCC uses in its overall supervision of foreign banks. Therefore, the OCC believes that the proposal will be helpful in clarifying aspects of the asset maintenance requirement.

The OCC invites comment on whether the detail provided by the proposal is helpful in clarifying the use and scope of the provision to the industry.

Also, the OCC invites comment on whether to exclude any classified asset entirely, as the provided in proposed § 28.20(c)(2)(ii), or whether to include certain classified assets (e.g. ''substandard'') in eligible assets in full or in part based on different risk weights and percentages.

Voluntary Liquidation (Section 28.22)

Currently, the OCC's regulations do not provide guidance on the procedures and standards applicable to a voluntary liquidation or termination of a Federal branch or Federal agency. In the past, the OCC has applied and modified the standards applicable in a national bank liquidation pursuant to 12 U.S.C. 181. The proposal clarifies the voluntary liquidation process for Federal branches and Federal agencies by referencing the applicable provisions in 12 CFR part 5. It also adds requirements that are specific to a Federal branch or Federal agency, such as notice to customers and creditors, and return of examination reports and the branch certificate.

Termination of Federal Branches and Agencies (Section 28.23)

The proposal clarifies the OCC's authority to terminate Federal branches and Federal agencies. The termination grounds include those stated in section 4(i) of the IBA, 12 U.S.C. 3102(i), the grounds for national bank termination referred to in 12 U.S.C. 191 and 12 U.S.C. 1821(c)(5), including unsafe and unsound practices, insufficiency or dissipation of assets, concealment of books and records, a money laundering offense, or a recommendation from the FRB to terminate a Federal branch or Federal agency pursuant to section 7(e)(5) of the IBA, 12 U.S.C. 3105(e)(5).

Derivation Table

Only substantive modifications, additions, and changes are indicated.

Revised provision	Original provision	Comments
§ 28.2	§ 20.2	Modified.
§ 28.3	§§ 20.3, 20.4	Significant change.
§ 28.4		Added.

Revised provision	Original provision	Comments
	§ 20.5	Removed.
§ 28.11	§ 28.2	Significant change.
§ 28.12	§ 28.3	Significant change.
§ 28.13	§ 28.4	Significant change.
§ 28.14	§ 28.5	Modified.
§ 28.15	§ 28.6	Significant change.
§ 28.16	§ 28.8	Significant change.
§ 28.17		Added.
§ 28.18	§ 28.10	Significant change.
§ 28.19		Added.
§ 28.20	§ 28.9	Significant change.
§ 28.22		Added.
§ 28.23		Added.
Subpart C	Subpart B of part 20	No change.

Regulatory Flexibility Act

It is hereby certified that this regulation will not have a significant economic impact on a substantial number of small entities. Accordingly, a regulatory flexibility analysis is not required. This regulation will reduce the regulatory burden on national banks and Federal branches and Federal agencies of foreign banks, regardless of size, by simplifying and clarifying existing regulations.

Executive Order 12866

The OCC has determined that this proposed rule is not a significant regulatory action.

Unfunded Mandates Act of 1995

Section 202 of the Unfunded Mandates Act of 1995 (Unfunded Mandates Act) (signed into law on March 22, 1995) requires that an agency prepare a budgetary impact statement before promulgating a rule that includes a Federal mandate that may result in the expenditure by state, local, and tribal governments, in the aggregate, or by the private sector, of $100 million or more in any one year. If a budgetary impact statement is required, section 205 of the Unfunded Mandates Act also requires an agency to identify and consider a reasonable number of regulatory alternatives before promulgating a rule. Because the OCC has determined that the proposed rule will not result in expenditures by state, local, and tribal governments, or by the private sector, of $100 million or more in any one year, the OCC has not prepared a budgetary impact statement or specifically addressed the regulatory alternatives considered. Nevertheless, as discussed in the preamble, the rule has the effect of reducing burden.

Paperwork Reduction Act

The collections of information contained in this notice of proposed rulemaking have been submitted to the Office of Management and Budget for review in accordance with the Paperwork Reduction Act of 1980 (44 U.S.C. 3504(h)). Comments on the collections of information should be sent to Legislative and Regulatory Activities Division, Attention: 1557–0102, Office of the Comptroller of the Currency, 250 E Street, SW, Washington, DC 20219, with a copy to the Office of Management and Budget, Paperwork Reduction Project (1557–0102), Washington, D.C. 20503.

The collections of information in this proposed regulation are in 12 CFR §§ 28.3, 28.13, 28.14, 28.15, 28.16, 28.17, 28.18, 28.20, 28.52, 28.53, and 28.54.

Much of this information is required by statute. Other items of information are needed by the OCC to maintain the safety and soundness of Federal branches and agencies and of national bank operations in the United States and abroad. This information will be used by the OCC to evaluate national banks with international operations and Federal branches and agencies for supervisory, prudential, and legal purposes and for statistical and examination purposes.

The likely respondents/recordkeepers are for-profit institutions.

The estimated annual burden per respondent varies from 9 hours to 64 or more hours, depending on individual circumstances, with an estimated average of 36.3 hours.

Estimated number of respondents: 185

Estimated annual frequency of responses: One per year.

List of Subjects

12 CFR Part 20

Foreign banking, National banks, Reporting and recordkeeping requirements.

12 CFR Part 28

Federal agencies, Federal branches, Foreign banking, National banks, Reporting and recordkeeping requirements.

Authority and Issuance

For the reasons set out in the preamble and under the authority of 12 U.S.C. 93a, chapter I of title 12 of the Code of Federal Regulations is proposed to be amended as set forth below:

PART 20—[REMOVED]

1. Part 20 is removed.

2. Part 28 is revised to read as follows:

PART 28—INTERNATIONAL BANKING ACTIVITIES

Subpart A—Foreign Operations of National Banks

Sec.
28.1 Authority, purpose, and scope.
28.2 Definitions.
28.3 Filing requirements for foreign operations of national banks.
28.4 Permissible activities.
28.5 Filing of notice.

Subpart B—Federal Branches and Agencies of Foreign Banks

28.10 Authority, purpose, and scope.
28.11 Definitions.
28.12 Approval of Federal branches and Federal agencies.
28.13 Permissible activities.
28.14 Limitations based upon capital of foreign banks.
28.15 Capital equivalency deposits.
28.16 Deposit-taking by uninsured Federal branches.
28.17 Changes in activities and operations.
28.18 Recordkeeping and reporting.
28.19 Enforcement.
28.20 Maintenance of assets.
28.21 Service of process.
28.22 Voluntary liquidation.
28.23 Termination of Federal branches and Federal agencies.

Subpart C—International Lending Supervision

28.50 Authority, purpose, and scope.
28.51 Definitions.
28.52 Allocated transfer risk reserve.

28.53 Accounting for fees on international loans.
28.54 Reporting and disclosure of international assets.

Authority: 12 U.S.C. 1 *et seq.*, 93a, 161, 602, 1818, 3102, 3108, and 3901 *et seq.*

Subpart A—Foreign Operations of National Banks

§ 28.1 Authority, purpose, and scope.

(a) *Authority*. This subpart is issued pursuant to 12 U.S.C. 1 et seq., 24(Seventh), 93a, and 602.

(b) *Purpose*. This subpart sets forth filing requirements for national banks that engage in international operations and clarifies permissible foreign activities of national banks.

(c) *Scope*. This subpart applies to all national banks that engage in international operations through a foreign branch, or acquire an interest in an Edge corporation, Agreement corporation, foreign bank, or certain other foreign organizations.

§ 28.2 Definitions.

For purposes of this subpart:

(a) *Agreement corporation* means a corporation having an agreement or undertaking with the Board of Governors of the Federal Reserve System (FRB) under section 25 of the Federal Reserve Act (FRA), 12 U.S.C. 601 through 604a.

(b) *Edge corporation* means a corporation that is organized under section 25(a) of the FRA, 12 U.S.C. 611 through 631.

(c) *Foreign bank* means an organization that:

(1) Is organized under the laws of a foreign country;

(2) Engages in the business of banking;

(3) Is recognized as a bank by the bank supervisory or monetary authority of the country of its organization or principal banking operations;

(4) Receives deposits to a substantial extent in the regular course of its business; and

(5) Has the power to accept demand deposits.

(d) *Foreign branch* means an office of a national bank (other than a representative office) that is located outside the United States at which a banking or financing business is conducted.

(e) *Foreign country* means one or more foreign nations, and includes the overseas territories, dependencies, and insular possessions of those nations and of the United States, and the Commonwealth of Puerto Rico.

§ 28.3 Filing requirements for foreign operations of national banks.

(a) *Notice requirement.* A national bank shall notify the OCC when it:

(1) Establishes, opens, closes, or relocates a foreign branch; or

(2) Files an application, notice, or report with the FRB regarding the acquisition or divestment of an interest in, or closing of, an Edge corporation, Agreement corporation, foreign bank, or other foreign organization.

(b) *Other applications and notices accepted*. The OCC accepts a copy of an application form, notice, or report submitted to another Federal agency that covers the proposed action and contains substantially the same information required by the OCC.

(c) *Additional information.* A national bank shall furnish the OCC with any additional information as the OCC may require in connection with the national bank's foreign operations.

§ 28.4 Permissible activities.

(a) *Generally.* Subject to the applicable approval process, if any, a national bank may engage in activities in a foreign country that are:

(1) Permissible for a national bank in the United States; and

(2) Usual in connection with the business of banking in the country where it transacts business.

(b) *Additional activities.* In addition to its general banking powers, a national bank may engage in any activities in a foreign country that are permissible under the FRB's Regulation K, 12 CFR part 211.

(c) *Foreign operations guarantees.* A national bank may guarantee the deposits and other liabilities of its Edge and Agreement corporations and of its corporate instrumentalities in foreign countries.

§ 28.5 Filing of notice.

(a) *Where to file.* A national bank shall file any notice or submission required under this subpart with the Office of the Comptroller of the Currency, International Banking and Finance, 250 E Street SW, Washington, DC 20219.

(b) *Availability of forms.* Individual forms and instructions for filings are available from International Banking and Finance.

Subpart B—Federal Branches and Agencies of Foreign Banks

§ 28.10 Authority, purpose, and scope.

(a) *Authority*. This subpart is issued pursuant to the authority in the International Banking Act of 1978 (IBA), 12 U.S.C. 3101 et seq., and 12 U.S.C. 93a.

(b) *Purpose and scope.* This subpart implements and clarifies the IBA pertaining to the licensing, supervision, and operations of Federal branches and Federal agencies in the United States.

§ 28.11 Definitions.

For purposes of this subpart:

(a) *Agreement corporation* means a corporation having an agreement or undertaking with the FRB under section 25 of the FRA, 12 U.S.C. 601 through 604a.

(b) *Change the status* of an office means conversion of a:

(1) State branch or state agency operated by a foreign bank, or a commercial lending company controlled by a foreign bank, into a Federal branch, limited Federal branch, or Federal agency;

(2) Federal agency into a Federal branch or limited Federal branch;

(3) Federal branch into a limited Federal branch or Federal agency; or

(4) Limited Federal branch into a Federal branch or Federal agency.

(c) *Edge corporation* means a corporation that is organized under section 25(a) of the FRA, 12 U.S.C. 611 through 631.

(d) *Establish a Federal branch or Federal agency* means to:

(1) Open and conduct business through a Federal branch or Federal agency;

(2) Acquire directly, through merger, consolidation, or similar transaction with another foreign bank, the operations of a Federal branch or Federal agency that is open and conducting business;

(3) Acquire a Federal branch or Federal agency through the acquisition of a foreign bank subsidiary that will cease to operate in the same corporate form following the acquisition;

(4) Change the status of an office; or

(5) Relocate a Federal branch or Federal agency within a state or from one state to another.

(e) *Federal agency* means an office or place of business, licensed by the OCC and operated by a foreign bank in any state, that may engage in the business of banking, including maintaining credit balances, cashing checks, and lending money, but may not accept deposits from citizens or residents of the United States. Obligations may not be considered credit balances unless they are:

(1) Incidental to, or arise out of the exercise of, other lawful banking powers;

(2) To serve a specific purpose;

(3) Not solicited from the general public;

(4) Not used to pay routine operating expenses in the United States such as salaries, rent, or taxes;

(5) Withdrawn within a reasonable period of time after the specific purpose for which they were placed has been accomplished; and

(6) Drawn upon in a manner reasonable in relation to the size and nature of the account.

(f) *Federal branch* means an office or place of business, licensed by the OCC and operated by a foreign bank in any state, that may engage in the business of banking, including accepting deposits, that is not a Federal agency as defined in paragraph (e) of this section.

(g) *Foreign bank* means an organization that is organized under the laws of a foreign country, a territory of the United States, Puerto Rico, Guam, American Samoa, or the Virgin Islands, and that engages directly in the business of banking outside the United States.

(h) *Foreign business* means any entity, including a corporation, partnership, sole proprietorship, association, or trust that is organized under the laws of a foreign country, or any United States entity that is controlled by a foreign entity or foreign national. A foreign entity or foreign national shall be deemed to control a United States entity if the foreign entity or individual directly controls, or has the power to vote 25 percent or more of any class of voting securities of, the United States entity or controls in any manner the election of a majority of the directors or trustees of the other entity.

(i) *Foreign country* means one or more foreign nations, and includes the overseas territories, dependencies, and insular possessions of those nations and of the United States, and the Commonwealth of Puerto Rico.

(j) *Home country* means the country in which the foreign bank is chartered or incorporated.

(k) *Home country supervisor* means the governmental entity or entities in the foreign bank's home country responsible for supervising and regulating the foreign bank.

(l) *Home state* of a foreign bank means the state in which the foreign bank has a branch, agency, subsidiary commercial lending company, or subsidiary bank. If a foreign bank has an office in more than one state, the home state of the foreign bank is the state that is selected to be the home state by the foreign bank or, in default of the foreign bank's selection, by the FRB.

(m) *Initial deposit* means the first deposit transaction between a depositor and the Federal branch made on or after [effective date of the final regulation]. The initial deposit may be placed into different deposit accounts or into different kinds of deposit accounts, such as demand, savings, or time accounts. Deposit accounts that are held by a depositor in the same right and capacity may be added together for the purpose of determining the dollar amount of the initial deposit.

(n) *International banking facility* means a set of asset and liability accounts segregated on the books and records of a depository institution, a United States branch or agency of a foreign bank, or an Edge corporation or Agreement corporation, that includes only international banking facility time deposits and extensions of credit.

(o) *Large United States business* means any business entity including a corporation, partnership, sole proprietorship, association, or trust that engages in commercial activity for profit, is organized under the laws of the United States or any state, and:

(1) The securities of which are registered on a national securities exchange or quoted on the National Association of Securities Dealers Automated Quotation System; or

(2) Has more than $1.0 million in annual revenues for the fiscal year preceding the year of the initial deposit.

(p) *Limited Federal branch* means a Federal branch that, pursuant to an agreement between the parent foreign bank and the FRB, may receive only those deposits that would be permissible for an Edge corporation to receive.

(q) *Managed or controlled* by a Federal branch or agency means that a majority of the responsibility for business decisions, including but not limited to decisions with regard to lending, asset management, funding, or liability management, or the responsibility for recordkeeping of assets or liabilities for a non-United States office, resides at the Federal branch or Federal agency.

(r) *Manual* means the Comptroller's Corporate Manual (12 CFR 5.2(c)).

(s) *Parent foreign bank senior management* means individuals at the executive level of the parent foreign bank who are responsible for supervising and authorizing activities of the Federal branch or Federal agency.

(t) *Person* means an individual or a corporation, government, partnership, association, or any other entity.

(u) *State* means any state of the United States or the District of Columbia.

(v) *United States bank* means a bank organized under the laws of the United States or any state of the United States.

§ 28.12 Approval of Federal branches and Federal agencies.

(a) *Approval requirements.* A foreign bank shall submit an application to and obtain prior approval from the OCC before it:

(1) Establishes a Federal branch, Federal agency, or limited Federal branch; or

(2) Exercises fiduciary powers at a Federal branch. A foreign bank may submit an application to exercise fiduciary powers at the time of filing an application for a Federal branch or at any subsequent date.

(b) *Standards for approval.* In reviewing an application by a foreign bank to establish a Federal branch or Federal agency, the OCC shall consider:

(1) The financial and managerial resources and future prospects of the applicant foreign bank and the Federal branch or Federal agency;

(2) Whether the foreign bank has furnished to the OCC the information the OCC requires to assess the application adequately, and provided the OCC with adequate assurances that information will be made available to the OCC on the operations or activities of the foreign bank or any of its affiliates that the OCC deems necessary to determine and enforce compliance with the IBA and other applicable Federal banking statutes;

(3) Whether the foreign bank and its United States affiliates are in compliance with applicable United States law;

(4) The convenience and needs of the community to be served and the effects of the proposal on competition in the domestic and foreign commerce of the United States;

(5) Whether the foreign bank is subject to comprehensive supervision or regulation on a consolidated basis by its home country supervisor; and

(6) Whether the home country supervisor has consented to the proposed establishment of the Federal branch or Federal agency.

(c) *Comprehensive supervision or regulation on a consolidated basis.* In determining whether a foreign bank is subject to comprehensive supervision or regulation on a consolidated basis, the OCC reviews various factors, including whether the foreign bank is supervised or regulated in a manner that its home country supervisor receives sufficient information on the worldwide operations of the foreign bank to assess the foreign bank's overall financial condition and compliance with laws and regulations as specified in the FRB's Regulation K, 12 CFR 211.24.

(d) *Conditions on approval.* The OCC may impose any conditions on its

approval that it deems necessary, including a condition permitting future termination of any activities based on the inability of the foreign bank to provide information on its activities or those of its affiliates, that the OCC deems necessary to determine and enforce compliance with United States banking laws.

(e) *Expedited approval.* Unless the OCC concludes that the filing presents significant supervisory or compliance concerns, or raises significant legal or policy issues, the OCC shall process the following filings by an eligible foreign bank under expedited approval procedures:

(1) *Intrastate relocations.* An application submitted by an eligible foreign bank to relocate a Federal branch or agency within a state is deemed approved by the OCC as of the seventh day after the close of the applicable public comment period in 12 CFR part 5, unless the OCC notifies the bank prior to that date that the filing is not eligible for expedited approval.

(2) *Conversions.* An application submitted by an eligible foreign bank to convert a Federal agency to a Federal branch or limited Federal branch, a Federal branch to a Federal agency or limited Federal branch, or a limited Federal branch to a Federal branch or a Federal agency is deemed approved by the OCC 45 days after filing with the OCC, unless the OCC notifies the bank prior to that date that the filing is not eligible for expedited approval.

(3) *Fiduciary powers.* An application submitted by an eligible foreign bank to exercise fiduciary powers at an established Federal branch is deemed approved by the OCC 30 days after filing with the OCC, unless the OCC notifies the bank prior to that date that the filing is not eligible for expedited approval.

(f) *Eligible foreign bank.* For purposes of this section, a foreign bank is an eligible foreign bank if each Federal branch and Federal agency of the foreign bank in the United States:

(1) Has a composite rating of 1 or 2 under the rating system for United States branches and agencies of foreign banking organizations;

(2) Is not subject to a cease and desist order, consent order, formal written agreement, Prompt Corrective Action directive (*see* 12 CFR part 6) or, if subject to such order, agreement, or directive, is informed in writing by the OCC that the Federal branch or Federal agency may be treated as an ''eligible foreign bank'' for purposes of this section; and

(3) Has, if applicable, a Community Reinvestment Act (CRA), 12 U.S.C. 2906, rating of ''Outstanding'' or ''Satisfactory''.

(g) *Procedures for approval.* A foreign bank shall file an application for approval pursuant to this section in accordance with 12 CFR part 5 and the Manual.

(h) *Additional requirements.* Nothing in this section relieves a foreign bank from obtaining the required approval of the FRB to establish a Federal branch or Federal agency in accordance with the FRB's Regulation K, 12 CFR part 211.

§ 28.13 Permissible activities.

(a) *Applicability of laws.*—(1) *General.* Except as otherwise provided by the IBA, other Federal laws or regulations, or otherwise determined by the OCC, the operations of a foreign bank at a Federal branch or Federal agency shall be conducted with the same rights and privileges and shall be subject to the same duties, restrictions, penalties, liabilities, conditions, and limitations that would apply if the Federal branch or Federal agency were a national bank operating at the same location.

(2) *Parent foreign bank senior management approval.* Unless otherwise provided by the OCC, any provision in law, regulation, policy, or procedure that requires a national bank to obtain the approval of its board of directors will be deemed to require a Federal branch or Federal agency to obtain the approval of parent foreign bank senior management.

(b) *Offshore activities.*—(1) *Federal branches and Federal agencies.* A Federal branch or Federal agency of a foreign bank shall not manage, through an office of the foreign bank that is located outside the United States and that is managed or controlled by that Federal branch or Federal agency, any type of activity that a United States bank is not permitted to manage at any branch or subsidiary of the United States bank that is located outside the United States.

(2) *Activities managed in foreign branches or subsidiaries of United States banks.* Activities that a United States bank may manage at its branch or subsidiary abroad include those activities that the bank may engage in abroad. A United States bank may engage abroad in activities permitted by the United States bank's state or Federal charter, regulations issued by the chartering authority, and other United States banking laws.

(c) *Additional guidance regarding permissible activities.* For purposes of section 7(h) of the IBA, 12 U.S.C. 3105(h), the OCC may issue opinions, interpretations, or rulings regarding permissible activities of Federal branches.

§ 28.14 Limitations based upon capital of foreign banks.

(a) *General.* Any limitation or restriction based upon the capital of a national bank shall be deemed to refer, as applied to a Federal branch or agency, to the dollar equivalent of the capital of the foreign bank.

(b) *Calculation.* Unless otherwise provided by the Comptroller, a foreign bank's capital must be calculated in a manner consistent with 12 CFR part 3 of this chapter.

(c) *Aggregation.* The business transacted by all Federal branches and Federal agencies shall be aggregated with the business transacted by all state branches and state agencies in determining the foreign bank's compliance with limitations based upon the capital of the foreign bank. The foreign bank shall designate one Federal branch or Federal agency office in the United States to maintain consolidated information so that compliance can be monitored.

§ 28.15 Capital equivalency deposits.

(a) *Capital equivalency deposits.* (1) For purposes of section 4(g) of the IBA, 12 U.S.C. 3102(g), unless otherwise provided by the OCC, a foreign bank's capital equivalency deposits shall consist of dollar deposits, including certificates of deposit and other instruments evidencing a deposit, investment securities of the type that may be held by national banks, high-grade commercial paper, bankers' acceptances, and other assets that the OCC permits for this purpose.

(2) The agreement with the depository bank to hold the capital equivalency deposit and the amount of the deposit must comply with the requirements in section 4(g) of the IBA, including the qualifying components and required minimum amount of the capital equivalency deposit. If a foreign bank has more than one Federal branch or Federal agency in a state, it shall determine the capital equivalency deposits and the amount of liabilities requiring capital equivalency coverage on an aggregate basis for all the foreign bank's Federal branches or Federal agencies.

(b) *Value of assets.* The obligations referred to in paragraph (a) of this section must be valued at principal amount or market value, whichever is lower. If no market value is available from a published source, they must be priced by an independent pricing service at least once every calendar quarter.

(c) *Increase in capital equivalency deposits.* For prudential or supervisory reasons, the OCC may require, in individual cases or otherwise, that a foreign bank increase its capital equivalency deposit above the minimum amount.

(d) *Deposit arrangements.* A depository bank shall segregate a foreign bank's capital equivalency deposit on its books and records. The funds deposited and obligations referred to in paragraph (a) of this section that are placed in safekeeping at a depository bank to satisfy a foreign bank's capital equivalency deposit requirement:

(1) May not be reduced in aggregate value by withdrawal without the prior approval of the OCC;

(2) Must be pledged and maintained pursuant to an agreement prescribed by the OCC; and

(3) Must be free from any lien, charge, right of setoff, credit or preference in connection with any claim of the depository bank against the foreign bank.

(e) *Maintenance of capital equivalency ledger account.* Each Federal branch or Federal agency shall maintain a capital equivalency account and keep records of the amount of liabilities requiring capital equivalency coverage in a manner and form prescribed by the OCC.

§ 28.16 Deposit-taking by uninsured Federal branches.

(a) *Policy.* In carrying out this section, the OCC shall consider the importance of according foreign banks competitive opportunities equal to those of United States banks and the availability of credit to all sectors of the United States economy, including international trade finance.

(b) *General.* An uninsured Federal branch may accept initial deposits of less than $100,000 only from:

(1) Individuals who are not citizens or residents of the United States at the time of the initial deposit;

(2) Individuals who are:

(i) Not citizens of the United States;

(ii) Residents of the United States; and

(iii) Employed by a foreign bank, foreign business, foreign government, or recognized international organization;

(3) Persons to whom the branch or foreign bank has extended credit or provided other nondeposit banking services within the past 12 months, or with whom the branch or bank has a written agreement to extend credit or provide such services within 12 months after the date of the initial deposit;

(4) Foreign businesses and large United States businesses;

(5) Foreign governmental units and recognized international organizations;

(6) Federal and state governmental units, including any political subdivision or agency thereof;

(7) Persons who are depositing funds in connection with the issuance of a financial instrument by the branch for transmission of funds, or transmission of funds by any electronic means;

(8) Persons who may deposit funds with an Edge corporation as provided in the FRB's Regulation K, 12 CFR 211.4, including persons engaged in certain international business activities; and

(9) Any other depositor if:

(i) The amount of deposits under paragraph (b)(9) of this section does not exceed on an average daily basis 1 percent of the average of the branch's deposits for the last 30 days of the most recent calendar quarter, excluding deposits of other offices, branches, agencies, or wholly owned subsidiaries of the foreign bank; and

(ii) The branch does not solicit deposits from the general public by advertising, display of signs, or similar activity designed to attract the attention of the general public.

(c) *Application for an exemption.* A foreign bank may apply to the OCC for an exemption to permit an uninsured Federal branch to accept or maintain deposit accounts that are not listed in paragraph (b) of this section. The request should describe:

(1) The types, sources, and estimated amounts of such deposits and explain why the OCC should grant an exemption; and

(2) How the exemption improves and maintains the availability of credit to all sectors of the United States economy, including the international trade finance sector.

(d) *Aggregation of deposits.* For purposes of paragraph (b)(9) of this section only, a foreign bank that has more than one Federal branch in the same state may aggregate deposits in all the Federal branches in that state, but excluding deposits of other branches, agencies or wholly owned subsidiaries of the bank. The average amount must be computed by using the sum of deposits as of the close of business of the last 30 calendar days ending with and including the last day of the calendar quarter divided by 30. The Federal branch shall maintain records of the calculation until its next examination by the OCC.

(e) *Notification to depositors.* A Federal branch that accepts deposits pursuant to this section shall provide notice to depositors pursuant to 12 CFR 346.7, which generally requires that the Federal branch conspicuously display a sign at the branch and include a statement on each signature card, passbook, and instrument evidencing a deposit that the deposit is not insured by the FDIC.

(f) *Transition period.* An uninsured Federal branch may maintain a deposit lawfully accepted prior to [the effective date of the final regulation]:

(1) If the deposit qualifies under paragraph (b) or paragraph (c) of this section; or

(2) No later than until:

(i) The maturity of a time deposit; or

(ii) Five years after [the effective date of the final regulation] for all other deposits.

(g) *Insured banks in United States territories.* For purposes of this section, the term ''foreign bank'' does not include any bank organized under the laws of any territory of the United States, Puerto Rico, Guam, American Samoa, or the Virgin Islands whose deposits are insured by the FDIC pursuant to the Federal Deposit Insurance Act, 12 U.S.C. 1811 et seq.

§ 28.17 Changes in activities and operations.

(a) *Notification.* A Federal branch or Federal agency shall notify the OCC if:

(1) It changes its corporate title;

(2) It changes its mailing address;

(3) It converts to a state branch, state agency, or representative office; or

(4) The parent foreign bank changes the designation of its home state.

(b) *Where to file.* A Federal branch or agency shall file any notice under this section with the Office of the Comptroller of the Currency, International Banking and Finance, 250 E Street SW, Washington, DC 20219.

(c) *Other notices accepted.* The OCC accepts a copy of an application form, notice, or report submitted to another Federal regulatory agency that covers the proposed action and contains substantially the same information as would be required by the OCC.

§ 28.18 Recordkeeping and reporting.

(a) *General.* A Federal branch or agency shall comply with applicable recordkeeping and reporting requirements that apply to national banks and with any additional requirements that may be prescribed by the OCC. A Federal branch or Federal agency, and the parent foreign bank, shall furnish information relating to the affairs of the parent foreign bank and its affiliates that the OCC may from time to time request.

(b) *Regulatory reports filed with other agencies.* A foreign bank operating a Federal branch or Federal agency in the United States shall provide the OCC with a copy of reports filed with other Federal regulatory agencies that are

designated in guidance issued by the OCC.

(c) *Maintenance of accounts, books, and records.* (1) Each Federal branch or Federal agency shall maintain a set of accounts and records reflecting its transactions that are separate from those of the foreign bank and any other branch or agency. The Federal branch or Federal agency shall keep a set of accounts and records in English sufficient to permit the OCC to examine the condition of the Federal branch or Federal agency and its compliance with applicable laws and regulations. The branch or agency shall promptly provide any additional records requested by the OCC for examination or supervisory purposes.

(2) A foreign bank with more than one Federal branch or Federal agency in a state shall designate one of those offices to maintain consolidated asset, liability, and capital equivalency accounts for all Federal branches or Federal agencies in that state.

§ 28.19 Enforcement.

As provided by section 13 of the IBA, 12 U.S.C. 3108(b), the OCC may enforce compliance with the requirements of the IBA, other applicable banking laws, and regulations or orders of the OCC under section 8 of the Federal Deposit Insurance Act, 12 U.S.C. 1818, in addition to any other remedies otherwise provided by the IBA or any other law.

§ 28.20 Maintenance of assets.

(a) *General rule.* (1) For prudential, supervisory, or enforcement reasons, the OCC may require a foreign bank to hold certain assets in the state in which its Federal branch or Federal agency is licensed. Those assets shall consist of currency, bonds, notes, debentures, drafts, bills of exchange, or other evidence of indebtedness including loan participation agreements or certificates, or other obligations payable in the United States or in United States funds or, with the approval of the OCC, funds freely convertible into United States funds in an amount prescribed by the OCC.

(2) If asset maintenance is required, the amount of assets may not be less than 105 percent of the aggregate amount of liabilities of the Federal branch or Federal agency, payable at or through the branch or agency in the state where it is licensed. To determine the aggregate amount of liabilities for purposes of this section, the foreign bank shall include bankers' acceptances, but exclude accrued expenses, and amounts due and other liabilities to the head office and any other branches, offices, agencies, subsidiaries, and affiliates of the foreign bank.

(b) *Value of assets.* For the purposes of this section, marketable securities must be valued at principal amount or market value, whichever is lower.

(c) *Eligible assets.* (1) In determining compliance with the asset maintenance requirements, the Federal branch or Federal agency will be given credit for:

(i) Capital equivalency deposits maintained pursuant to § 28.15;

(ii) Reserves required to be maintained by the Federal branch or Federal agency pursuant to the FRB's authority under 12 U.S.C. 3105(a); and

(iii) Assets pledged, and surety bonds payable, to the FDIC to secure the payment of domestic deposits.

(2) In determining eligible assets for purposes of this section, the Federal branch or Federal agency shall exclude, at a minimum:

(i) All amounts due from the head office or any other branch, office, agency, subsidiary, or affiliate of the foreign bank;

(ii) Any classified asset;

(iii) Any asset that, in the determination of the OCC, is not supported by sufficient credit information;

(iv) Any deposit with a bank in the United States, unless that bank has executed a valid waiver of offset agreement;

(v) Any asset not in the Federal branch's actual possession unless the branch holds title to the asset and maintains records sufficient to enable independent verification of the branch's ownership of the asset, as determined at the most recent examination; and

(vi) Any other particular asset or class of assets as provided by the OCC, based on a case-by-case assessment of the risks associated with the asset.

(d) *International banking facility.* Unless specifically exempted by the OCC, the assets and liabilities of any international banking facility operated through the Federal branch or Federal agency must be included in the computation of eligible assets and liabilities for purposes of this section.

§ 28.21 Service of process.

A foreign bank operating at any Federal branch or Federal agency is subject to service of process at the location of the Federal branch or Federal agency.

§ 28.22 Voluntary liquidation.

(a) *Procedures.* Unless otherwise provided, a Federal branch or Federal agency that proposes to close its operations shall comply with the requirements in 12 CFR 5.48 and the Manual.

(b) *Notice to customers and creditors.* A foreign bank shall provide any customers and known creditors, not otherwise notified in writing, with written notice of the impending closure of the Federal branch or Federal agency at least 30 days prior to its closure.

(c) *Report of Condition.* The Federal branch or Federal agency shall submit a Report of Assets and Liabilities of United States Branches and Agencies of Foreign Banks as of the close of the last business day prior to the start of liquidation of the Federal branch or Federal agency. This report must include a certified maturity schedule of all remaining liabilities, if any.

(d) *Return of reports and certificate.* The Federal branch or Federal agency shall return to the OCC all Reports of Examination and the Federal branch or Federal agency license certificate within 30 days of closure to the public.

§ 28.23 Termination of Federal branches and Federal agencies.

(a) *Grounds for termination.* The OCC may revoke the authority of a foreign bank to operate a Federal branch or Federal agency if:

(1) The OCC determines that there is reasonable cause to believe that the foreign bank has violated or failed to comply with any of the provisions of the IBA, other applicable Federal laws or regulations, or orders of the OCC;

(2) A conservator is appointed for the foreign bank or a similar proceeding is initiated in the foreign bank's home country;

(3) One or more of the grounds for termination, including unsafe and unsound practices, insufficiency or dissipation of assets, concealment of books and records, a money laundering conviction, or other grounds as specified in 12 U.S.C. 191, exists;

(4) The OCC receives a recommendation from the FRB, pursuant to 12 U.S.C. 3105(e)(5), that the license of a Federal branch or Federal agency be terminated.

(b) *Procedures.*—(1) *Notice and hearing.* Except as otherwise provided in this section, an order by the OCC to terminate the license of a Federal branch or Federal agency shall be issued after notice to the Federal branch or Federal agency and after an opportunity for a hearing.

(2) *Procedures for hearing.* A hearing under this section shall be conducted pursuant to subpart A of the OCC's Rules of Practice and Procedure in 12 CFR part 19.

(3) *Expedited procedure.* The OCC may act without providing a hearing if the OCC determines that expeditious action is necessary in order to protect

the public interest. When the OCC finds that it is necessary to act without providing an opportunity for a hearing, the OCC in its sole discretion, may:

(i) Provide the Federal branch or Federal agency with notice of the intended termination order;

(ii) Grant the Federal branch or Federal agency an opportunity to present a written submission opposing issuance of the order; or

(iii) Take any other action designed to provide the Federal branch or Federal agency with notice and an opportunity to present its views concerning the termination order.

Subpart C—International Lending Supervision

§ 28.50 Authority, purpose, and scope.

(a) *Authority.* This subpart is issued pursuant to 12 U.S.C. 1 et seq., 93a, 161, and 1818; and the International Lending Supervision Act of 1983 (Pub. L. 98–181, title IX, 97 Stat. 1153, 12 U.S.C. 3901 et seq.).

(b) *Purpose.* This subpart implements the requirements of the International Lending Supervision Act of 1983 (12 U.S.C. 3901 et seq.).

(c) *Scope.* This subpart requires national banks and District of Columbia banks to establish reserves against the risks presented in certain international assets and sets forth the accounting for various fees received by the banks when making international loans.

§ 28.51 Definitions.

For the purposes of this subpart:

(a) *Banking institution* means a national banking association or a District of Columbia bank.

(b) *Federal banking agencies* means the Board of Governors of the Federal Reserve System, the OCC, and the Federal Deposit Insurance Corporation.

(c) *International assets* means those assets required to be included in banking institutions' *Country Exposure Report* forms (FFIEC No. 009).

(d) *International loan* means a loan as defined in the instructions to the *Report of Condition and Income* for the respective banking institution (FFIEC Nos. 031, 032, 033 and 034) and made to a foreign government, or to an individual, a corporation, or other entity not a citizen of, resident in, or organized or incorporated in the United States.

(e) *International syndicated loan* means a loan characterized by the formation of a group of *managing* banking institutions and, in the usual case, assumption by them of underwriting commitments, and participation in the loan by other banking institutions.

(f) *Loan agreement* means the document signed by all of the parties to a loan, containing the amount, terms and conditions of the loan, and the interest and fees to be paid by the borrower.

(g) *Restructured international loan* means a loan that meets the following criteria:

(1) The borrower is unable to service the existing loan according to its terms and is a resident of a foreign country in which there is a generalized inability of public and private sector obligors to meet their external debt obligations on a timely basis because of a lack of, or restraints on the availability of, needed foreign exchange in the country; and

(2) The terms of the existing loan are amended to reduce stated interest or extend the schedule of payments; or

(3) A new loan is made to, or for the benefit of, the borrower, enabling the borrower to service or refinance the existing debt.

(h) *Transfer risk* means the possibility that an asset cannot be serviced in the currency of payment because of a lack of, or restraints on the availability of, needed foreign exchange in the country of the obligor.

§ 28.52 Allocated transfer risk reserve.

(a) *Establishment of Allocated Transfer Risk Reserve.* A banking institution shall establish an allocated transfer risk reserve (ATRR) for specified international assets when required by the OCC in accordance with this section.

(b) *Procedures and Standards*—(1) *Joint agency determination.* At least annually, the Federal banking agencies shall determine jointly, based on the standards set forth in paragraph (b)(2) of this section, the following:

(i) Which international assets subject to transfer risk warrant establishment of an ATRR;

(ii) The amount of the ATRR for the specified assets; and

(iii) Whether an ATRR established for specified assets may be reduced.

(2) *Standards for requiring ATRR*—(i) *Evaluation of assets.* The Federal banking agencies shall apply the following criteria in determining whether an ATRR is required for particular international assets:

(A) Whether the quality of a banking institution's assets has been impaired by a protracted inability of public or private obligors in a foreign country to make payments on their external indebtedness as indicated by such factors, among others, as whether:

(*1*) Such obligors have failed to make full interest payments on external indebtedness;

(*2*) Such obligors have failed to comply with the terms of any restructured indebtedness; or

(*3*) A foreign country has failed to comply with any International Monetary Fund or other suitable adjustment program; or

(B) Whether no definite prospects exist for the orderly restoration of debt service.

(ii) *Determination of amount of ATRR.* (A) In determining the amount of the ATRR, the Federal banking agencies shall consider:

(*1*) The length of time the quality of the asset has been impaired;

(*2*) Recent actions taken to restore debt service capability;

(*3*) Prospects for restored asset quality; and

(*4*) Such other factors as the Federal banking agencies may consider relevant to the quality of the asset.

(B) The initial year's provision for the ATRR shall be ten percent of the principal amount of each specified international asset, or such greater or lesser percentage determined by the Federal banking agencies. Additional provision, if any, for the ATRR in subsequent years shall be fifteen percent of the principal amount of each specified international asset, or such greater or lesser percentage determined by the Federal banking agencies.

(3) *Notification.* Based on the joint agency determinations under paragraph (b)(1) of this section, the OCC shall notify each banking institution holding assets subject to an ATRR:

(i) Of the amount of the ATRR to be established by the institution for specified international assets; and

(ii) That an ATRR to be established for specified assets may be reduced.

(c) *Accounting treatment of ATRR*—(1) *Charge to current income.* A banking institution shall establish an ATRR by a charge to current income and the amounts so charged shall not be included in the banking institution's capital or surplus.

(2) *Separate accounting.* A banking institution shall account for an ATRR separately from the Allowance for Possible Loan Losses, and shall deduct the ATRR from ''gross loans and leases'' to arrive at ''net loans and leases.'' The ATRR must be established for each asset subject to the ATRR in the percentage amount specified.

(3) *Consolidation.* A banking institution shall establish an ATRR, as required, on a consolidated basis. Consolidation should be in accordance with the procedures and tests of significance set forth in the instructions for preparation of *Consolidated Reports of Condition and Income* (FFIEC Nos.

031, 032, 033 and 034). For bank holding companies, the consolidation shall be in accordance with the principles set forth in the ''Instructions to the Bank Holding Company Financial Supplement to Report F.R. Y–6'' (Form F.R. Y–9). Edge and Agreement corporations engaged in banking shall report in accordance with instructions for preparation of the Report of Condition for Edge and Agreement Corporations (Form F.R. 2886b).

(4) *Alternative accounting treatment.* A banking institution need not establish an ATRR if it writes down in the period in which the ATRR is required, or has written down in prior periods, the value of the specified international assets in the requisite amount for each such asset. For purposes of this paragraph, international assets may be written down by a charge to the Allowance for Possible Loan Losses or a reduction in the principal amount of the asset by application of interest payments or other collections on the asset. However, the Allowance for Possible Loan Losses must be replenished in such amount necessary to restore it to a level which adequately provides for the estimated losses inherent in the banking institution's loan portfolio.

(5) *Reduction of ATRR.* A banking institution may reduce an ATRR when notified by the OCC or, at any time, by writing down such amount of the international asset for which the ATRR was established.

§ 28.53 Accounting for fees on international loans.

(a) *Restrictions on fees for restructured international loans.* No banking institution shall charge any fee in connection with a restructured international loan unless all fees exceeding the banking institution's administrative costs, as described in paragraph (c)(2) of this section, are deferred and recognized over the term of the loan as an interest yield adjustment.

(b) *Amortizing fees.* Except as otherwise provided by this section, fees received on international loans shall be deferred and amortized over the term of the loan. The interest method should be used during the loan period to recognize the deferred fee revenue in relation to the outstanding loan balance. If it is not practicable to apply the interest method during the loan period, the straight-line method shall be used.

(c) *Accounting treatment of international loan or syndication administrative costs and corresponding fees.* (1) Administrative costs of originating, restructuring, or syndicating an international loan shall be expensed as incurred. A portion of the fee income equal to the banking institution's administrative costs may be recognized as income in the same period such costs are expensed.

(2) The administrative costs of originating, restructuring, or syndicating an international loan include those costs which are specifically identified with negotiating, processing and consummating the loan. These costs include, but are not necessarily limited to: Legal fees; costs of preparing and processing loan documents; and an allocable portion of salaries and related benefits of employees engaged in the international lending function and, where applicable, the syndication function. No portion of supervisory and administrative expenses or other indirect expenses such as occupancy and other similar overhead costs shall be included.

(d) *Fees received by managing banking institutions in an international syndicated loan.* Fees received on international syndicated loans representing an adjustment of the yield on the loan shall be recognized over the loan period using the interest method. If the interest yield portion of a fee received on an international syndicated loan by a managing banking institution is unstated or differs materially from the pro rata portion of fees paid other participants in the syndication, an amount necessary for an interest yield adjustment shall be recognized. This amount shall at least be equivalent (on a pro rata basis) to the largest fee received by a loan participant in the syndication that is not a managing banking institution. The remaining portion of the syndication fee may be recognized as income at the loan closing date to the extent that it is identified and documented as compensation for services in arranging the loan. Such documentation shall include the loan agreement. Otherwise, the fee shall be deemed an adjustment of yield.

(e) *Loan Commitment fees.* (1) Fees which are based upon the unfunded portion of a credit for the period until it is drawn and represent compensation for a binding commitment to provide funds or for rendering a service in issuing the commitment shall be recognized as income over the term of the commitment period using the straight-line method of amortization. Such fees for revolving credit arrangements, where the fees are received periodically in arrears and are based on the amount of the unused loan commitment, may be recognized as income when received provided the income result would not be materially different.

(2) If it is not practicable to separate the commitment portion from other components of the fee, the entire fee shall be amortized over the term of the combined commitment and expected loan period. The straight-line method of amortization should be used during the commitment period to recognize the fee revenue. The interest method should be used during the loan period to recognize the remaining fee revenue in relation to the outstanding loan balance. If the loan is funded before the end of the commitment period, any unamortized commitment fees shall be recognized as revenue at that time.

(f) *Agency fees.* Fees paid to an agent banking institution for administrative services in an intentional syndicated loan shall be recognized at the time of the loan closing or as the service is performed, if later.

§ 28.54 Reporting and disclosure of international assets.

(a) *Requirements.* (1) Pursuant to section 907(a) of the International Lending Supervision Act of 1983 (title IX, Pub. L. 98–181, 97 Stat. 1153, 12 U.S.C. 3906) (the Act) a banking institution shall submit to the OCC, at least quarterly, information regarding the amounts and composition of its holdings of international assets.

(2) Pursuant to section 907(b) of the Act (12 U.S.C. 3906), a banking institution shall submit to the OCC information regarding concentrations in its holdings of international assets that are material in relation to total assets and to capital of the institution, such information to be made publicly available by the OCC on request.

(b) *Procedures.* The format, content and reporting and filing dates of the reports required under paragraph (a) of this section shall be determined jointly by the Federal banking agencies. The requirements to be prescribed by the agencies may include changes to existing reporting forms (such as the Country Exposure Report, form FFIEC No. 009) or such other requirements as the agencies deem appropriate. The agencies also may determine to exempt from the requirements of paragraph (a) of this section banking institutions that, in the agencies' judgment, have de minimis holdings of international assets.

(c) *Reservation of Authority.* Nothing contained in this rule shall preclude the OCC from requiring from a banking institution such additional or more frequent information on the institution's holdings of international assets as the office may consider necessary.

Dated: June 26, 1995.

Eugene A. Ludwig,

Comptroller of the Currency.

[FR Doc. 95–16201 Filed 7–3–95; 8:45 am]

BILLING CODE 4810–33–P

CONSUMER PRODUCT SAFETY COMMISSION

16 CFR Parts 1500 and 1507

Multiple Tube Mine and Shell Fireworks Devices

AGENCY: Consumer Product Safety Commission.

ACTION: Proposed rule.

SUMMARY: The Commission is proposing to amend its fireworks regulations to require that multiple tube mine and shell devices that have any tube with an inner diameter of 1.5 inches (3.8 cm) or greater pass a performance test for stability. Specifically, these devices would be required to have a minimum tip angle above 60 degrees. Requirements currently enforced by the Commission do not adequately address the risk of injury posed by the potential tipover of these fireworks devices, and labeling would not adequately reduce the risk. Although a voluntary standard exists, the Commission does not believe that it would adequately reduce the risk of tipover or that compliance would be adequate. The Commission is issuing this proposed rule under the authority of the Federal Hazardous Substances Act. The Commission is not proposing any action on multiple tube devices having an inner diameter of less than 1.5 inches.

DATES: Written comments in response to this notice must be received by the Commission no later than September 18, 1995.

ADDRESSES: Comments should be mailed, preferably in five (5) copies, to the Office of the Secretary, Consumer Product Safety Commission, Washington, DC 20207, or delivered to the Office of the Secretary, Consumer Product Safety Commission, Room 502, 4330 East-West Highway, Bethesda, Maryland 20814; telephone (301) 504–6800.

FOR FURTHER INFORMATION CONTACT: Michael A. Babich, Ph.D, Project Manager, Directorate for Epidemiology and Health Sciences, Consumer Product Safety Commission, Washington, DC 20207–001; telephone (301) 504–0994, ext. 1383.

SUPPLEMENTARY INFORMATION:

A. Background

Multiple tube mine and shell fireworks devices (also called ''display racks'' and referred to in this notice as ''multiple tube devices'') are classified by the Department of Transportation (''DOT'') as 1.4G explosive devices (formerly Class C common fireworks devices) which are suitable for use by consumers. Multiple tube devices are non-reloadable devices that fire multiple aerial shells and/or comets into the air while producing visual or audible effects. These devices consist of several vertical tubes with a common fuse, either with or without a horizontal base.

Because it is designed to fire sequentially, there is a danger that after the first shot or few shots, the device may become unstable and tip over. The other shots may then fire horizontally or at an angle and hit the operator or spectators. The Commission is aware of two deaths to spectators involving multiple tube devices that occurred in this manner. Both of these incidents involved devices with tubes larger than 1.5 inches in diameter.

The Commission regulates fireworks devices pursuant to the provisions of the Federal Hazardous Substances Act (''FHSA''). 15 U.S.C. 1261 *et seq.* Under current regulations, the Commission has declared certain specified fireworks devices to be ''banned hazardous substances.'' 16 CFR 1500.17(a)(3), (8) and (9). Additional regulations prescribe the requirements that fireworks devices not specifically listed as banned must meet to avoid being classified as banned hazardous substances. 16 CFR part 1507. These include a requirement that fuses burn for 3 to 6 seconds, resist side ignition, and remain securely attached to the device; a requirement that the minimum horizontal dimension or diameter of the base of a device must be at least one third of the height of the device; and a requirement to prevent blowout of the tube. Finally, additional Commission regulations prescribe specific warnings required on various legal fireworks devices, 16 CFR 1500.14(b)(7), and designate the size and location of these warnings. 16 CFR 1500.121.

On July 1, 1994, the Commission issued an advance notice of proposed rulemaking (''ANPR'') discussing the hazard presented by multiple tube devices of all sizes, but noted the more severe incidents with large devices. 59 FR 33928. The ANPR used 1 inch (2.54 cm) as the cutoff between small and large devices. The ANPR explained that the Commission was considering several regulatory alternatives: (1) Ban all multiple tube devices; (2) ban multiple tube devices with an inside tube diameter of greater than 1 inch; (3) require additional labeling on all multiple tube devices; (4) establish performance or design criteria to modify these devices; (5) pursue individual product recalls; and (6) take no mandatory action, but encourage development of a voluntary standard.

The Commission is proposing a performance standard for multiple tube devices with any inner tube diameter of 1.5 inches or more. As explained below, the Commission believes that 1.5 inches is a more appropriate measure for distinguishing between large and small devices. The Commission is not proposing any further regulatory action on small devices.

B. Statutory Authority

This proceeding is conducted under provisions of the FHSA. 15 U.S.C. 1261 *et seq.* Fireworks are ''hazardous substances'' within the meaning of section 2(f)(1)(A) of the FHSA because they are flammable or combustible substances, or generate pressure through decomposition, heat, or other means, and ''may cause substantial personal injury or substantial illness during or as a proximate result of any customary or reasonably foreseeable handling or use * * *'' 15 U.S.C. 1261(f)(1)(A).

Under section 2(q)(1)(B) of the FHSA, the Commission may classify as a ''banned hazardous substance'' any hazardous substance intended for household use which, notwithstanding the precautionary labeling required by the FHSA, presents such a hazard that keeping the substance out of interstate commerce is the only adequate means to protect the public health and safety. *Id.* 1261(q)(1)(B). A proceeding to classify a substance as a banned hazardous substance under section 2(q)(1) of the FHSA is governed by the requirements set forth in section 3(f) of the FHSA, and by section 701(e) of the Federal Food, Drug, and Cosmetic Act (''FDCA'') (21 U.S.C. 371(e)). *See* 15 U.S.C. 1261(q)(2).

The July 1, 1994, ANPR was the first step necessary to declare the specified multiple tube devices banned hazardous substances under section 2(q)(1). *See* 15 U.S.C. 1262(f). This proposed regulation continues the regulatory process in accordance with the requirements of 15 U.S.C. 1262(h). Under the proposed rule, multiple tube devices with tubes measuring 1.5 inches or larger in diameter would be considered banned hazardous substances unless they comply with the tip angle test explained below.

If the Commission determines to issue a final rule, it must publish the text of the final rule and a final regulatory analysis that includes: (1) A description of the potential costs and benefits of the rule; (2) a description of alternatives considered by the Commission (including a description of their potential costs and benefits and an explanation of why they were not chosen); and (3) a summary of significant issues raised by comments on the preliminary regulatory analysis published with the proposed rule. *Id.* 1262(i)(1). The Commission also must make findings that: (1) Any relevant voluntary standard is unlikely to adequately reduce the risk of injury or substantial compliance with the voluntary standard is unlikely; (2) the expected benefits of the regulation bear a reasonable relationship to expected costs; and (3) the regulation imposes the least burdensome requirement that would adequately reduce the risk of injury. *Id.* 1262(i)(2).

If the Commission decides to finalize the rule, procedures established under section 701(e) of the FDCA would govern. 15 U.S.C. 1261(q)(2). These procedures provide that once the Commission issues a final rule, persons who would be adversely affected by the rule have a period of thirty (30) days in which to file objections stating reasonable grounds therefor, and to request a public hearing on those objections. 21 U.S.C. 371(e). Should valid objections be filed, a hearing to receive evidence concerning the objections would be held and the presiding officer would issue an order after the hearing, based upon substantial evidence. 21 U.S.C. 371(e); 16 CFR part 1502.

C. The Product: Large Devices

The ANPR broadly addressed multiple tube devices of all sizes. As discussed in section E below, the Commission is narrowing the focus of this proceeding to devices that have any tube equal to or greater than 1.5 inches in inner diameter (hereinafter referred to as ''large devices''). The Commission believes that devices 1.5 inches or more are the most appropriate devices for the Commission's focus. The large devices involved in fatalities and tested by the Commission staff have had tube diameters that measured at least 1.5 inches. The staff believes that devices with tubes between 1.0 and less than 1.5 inches are rare. Moreover, the fireworks industry defines large devices as those with tube diameters greater than or equal to 1.5 inches. Thus, economic information from the industry is organized in this manner. Because there are few, if any, devices with inner tube diameters between 1.0 and 1.5 inches, the Commission believes that this change will have little or no impact.

Large multiple tube devices are relatively new, first introduced by domestic manufacturers around 1986. Generally, they consist of three or more tubes grouped together, sometimes on a wooden base, fused in a series to fire sequentially. Where bases are used, they come in a variety of different dimensions. The devices fire aerial shells or comets from the tubes, producing visual and audible effects. These devices are among the largest fireworks available to consumers. They are sometimes referred to as display racks.(13) [1]

The tubes may be individually labeled or have a single label surrounding them. In any case, Commission regulations require that multiple tube devices display the following conspicuous label:

Warning (or Caution) Emits Showers of Sparks (or Shoots Flaming Balls, if More Descriptive)

Use only under [close] adult supervision.
For outdoor use only.
Place on a hard smooth surface (or place upright on level ground, if more descriptive).
Do not hold in hand.
Light fuse and get away.
16 CFR 1500.14(b)(7)(ix).

The National Fireworks Association (''NFA'') reports retail sales of large multiple tube devices between $24 and $36 million annually, with an estimated 400,000 to 700,000 units sold per year. Prices range from $30 to $130 per unit. Most devices range in price from $50 to $60. The NFA reports that domestic devices account for about 75 percent of the market (by dollar volume) and somewhat less by unit sales. Imported devices are manufactured primarily in China, and go through several wholesalers before reaching the retail vendor.(13)

Because the devices fire sequentially, the force from one of the earlier shots can tip the device over, causing it to fall into a horizontal position. A subsequent shot can discharge as the device is falling or when it is in a horizontal position. When this occurs there is a risk that one of the projectiles may strike the operator of the device or spectators and cause serious injury or even death.

D. Risk of Injury

As reported in the ANPR, the Commission is aware of two deaths involving large multiple tube devices. In both incidents, the device tipped over while functioning. The projectile fired horizontally from the device and struck the victim. In each case, the victim was a spectator.

The first fatality occurred in July of 1991. A 3-year-old boy was standing between his father's legs approximately 40 feet from an area where fireworks were being set off at a family reunion. The device had been placed on concrete blocks. The device tipped over after the third shot, and the fourth shell fired horizontally in the direction of the boy, striking him in the left ear. He died the next morning.(2, Tab A)

The second fatality occurred in July of 1992. The victim, a 65-year-old grandmother, was sitting at the end of a picnic table watching a family fireworks display approximately 40 feet away. Her son placed a large multiple tube device on a piece of wafer board that extended about one foot over the end of a boat dock. He placed a 2×4 block of wood under the end of the board so that the device would shoot out over the lake. After lighting the device, he walked toward the shore and noticed that the device had tipped over after the third shot. The fourth shell discharged horizontally and struck his mother in the temple and eye. She died the next morning.(2, Tab A)

E. Small Multiple Tube Devices

The Commission is not proposing any action concerning multiple tube devices with tube diameters less than 1.5 inches. As explained below, it does not appear that the tip angle proposed for large devices would be appropriate for small devices. Furthermore, the Commission's data indicate that no deaths and relatively few injuries have occurred with the small devices.(5) The Directorate for Economics estimates that with the large number of small devices on the market (many of which might have to be modified to meet a standard) and the relatively few number of reported incidents, the costs of regulatory action might substantially exceed anticipated benefits.(13)

F. Commission Tests To Develop a Standard

1. Testing Prior to the ANPR

As recounted in the ANPR, after the Commission learned about the first fatality, the staff informed the fireworks industry, including the American Pyrotechnics Association (''APA'') and the American Fireworks Standards Laboratory (''AFSL''). Several domestic manufacturers of large multiple tube devices began developing a test for the potential of these devices to tip over while functioning. The test used a 2-

[1] Numbers in parentheses refer to documents listed at the end of this notice.

inch (5 cm) thick block of medium density (2 pounds per cubic foot or 0.032g/cm^3) polyurethane upholstery foam to simulate grassy or other uneven surfaces.

AFSL then began work to revise its standard for these devices to incorporate such a dynamic stability test. AFSL issued an interim revised voluntary standard in January 1993 (which is the current version of the standard). The Commission also collected samples of large multiple tube devices and tested them for tipover using the industry's dynamic stability test.(1 and 14)

2. Dynamic Stability Testing

After issuing the ANPR, the Commission staff devised a plan to develop a dynamic stability test that could provide a reliable performance standard for multiple tube devices. The staff's objective was to develop a test that could reliably distinguish between large multiple tube devices that are dangerously unstable and those that do not present an unreasonable tipover risk. Like the industry, the staff attempted to identify a test surface that would simulate grass (the surface believed to be commonly used for fireworks displays), and that would produce consistent results in repeated tests.

In order to accomplish this goal, the staff had to identify a surface on which the devices would consistently tipover or remain upright at the same rate as on grass. If the tipover rate was significantly greater on the test surface than on grass, the standard might be too stringent. If the tipover rate was significantly lower on the test surface than on grass, the standard might not adequately protect consumers. The staff's testing focused principally on large devices since these present the most serious hazard.

The staff tested large multiple tube devices in two phases. In phase I, three devices were tested on grass and on three types of foam. The type of foam that yielded tipover results closest to those on grass was to be used in phase II, where six additional devices were tested with grass and one type of foam.[2] All nine large multiple tube devices had inner tube diameters of at least 1.5 inches. Three devices (numbers 2, 3, and 4) were modified by trimming their bases, thereby increasing their tip-over rates. This was done to help assess the relationship between grass and foam by having a broad range of tipover rates among the devices.(6 and 8)

The staff took measurements of conditions during testing, such as wind-speed and temperature, and determined that these factors had little effect on the testing results. The staff also measured the level and topography of the ground used for testing on grass. This testing was conducted on typical field grass in the Leesburg, Virginia area. The grass area varied from mostly grass to a mixture of grass and weeds. Steps were taken to assure that the locations for tests on the field were randomly selected and were relatively level.(6, 7 and 8)

The staff began testing in phase I with 2-inch thick foams of three different densities. This thickness was chosen, in part, because the AFSL standard specifies 2-inch thick medium density foam. However, in the initial tests, the tipover rates with all three densities of two-inch thick foam were significantly greater than with grass (39–50 tipovers out of 50 on foam compared with 4 out of 50 on grass). Therefore, the experimental design was changed to include high density foam of three smaller thicknesses (0.75, 1.0, and 1.5 inches) in the hope of achieving better agreement in the tipover rates.(6 and 8)

The results of phase I are summarized in Table 1. None of the three foams agreed consistently with grass for all three devices. With device 1, only 0.75 inch foam agreed adequately with grass. With device 2 (unmodified), only 1.0-inch foam agreed. With device 3, none of the foams agreed with grass, although 1.5-inch foam came the closest. (Specifically, the tipover rates with all three foams were significantly lower than the rate with grass.) One-inch foam was chosen for phase II testing because it appeared to be the best overall choice among the three foams, i.e., it did not consistently underestimate or overestimate the tipover rates on grass.(6 and 8)

TABLE 1.—PHASE I—INCIDENCE AND PERCENTAGE OF TIPOVER WITH LARGE MULTIPLE TUBE DEVICES ON GRASS OR HIGH DENSITY POLYURETHANE UPHOLSTERY FOAM

Device	Grass	Polyurethane foam		
		0.75 inch	1.0 inch	1.5 inch
1	4/50 8%	4/50 8%	14/50* 28%	40/50* 80%
2[a]	32/50 64%	9/50* 18%	25/50 50%	43/50* 86%
3[a]	27/50 54%	2/50* 4%	3/50* 6%	7/50* 14%

* Significantly different from grass, P<0.05.
[a] Device modified to increase tipover rate.

In phase II, six additional devices were tested on grass and 1.0-inch thick high density foam. The results were then combined with the results from phase I (Table 2). Once again, there was not consistent agreement between the tipover rates on foam and on grass. Four devices (numbers 5, 7, 8, and 9) did not tip over in 50 tests each with grass and 1.0-inch thick foam. With device 2, the tipover rate with foam (25/50) did not differ significantly from that with grass (32/50). However, with device 3, the tipover rate with foam (3/50) was significantly *less* than that with grass (27/50). With devices 1 and 6, the tipover rate with foam was significantly *greater* than that with grass.(6 and 8)

TABLE 2.—PHASE II—INCIDENCE AND PERCENTAGE OF TIPOVER WITH LARGE MULTIPLE TUBE DEVICES ON GRASS OR 1.0-INCH HIGH DENSITY POLYURETHANE UPHOLSTERY FOAM

Device	Grass	Foam
1[a]	4/50 8%	14/50* 28%
2[b]	32/50	25/50

[2] Testing of a seventh device originally included in phase II was discontinued because burning material from the device started fires in the testing field.

TABLE 2.—PHASE II—INCIDENCE AND PERCENTAGE OF TIPOVER WITH LARGE MULTIPLE TUBE DEVICES ON GRASS OR 1.0-INCH HIGH DENSITY POLYURETHANE UPHOLSTERY FOAM—Continued

Device	Grass	Foam
	64%	50%
3 [b]	27/50	3/50*
	54%	6%
4 [b]	30/50	36/50
	60%	72%
5	0/90	0/50
	0%	0%
6 [a]	10/50	25/50*
	20%	50%
7	0/50	0/50
	0%	0%
8	0/90	0/50
	0%	0%
9	0/50	0/50
	0%	0%

* Significantly different from grass, P<0.05.
[a] Device has no base.
[b] Device modified to increase tipover rate.

The three modified devices (numbers 2, 3, and 4) were also tested on grass in unmodified form, and they rarely tipped over. Seven of the nine large devices that were tested have particleboard bases (all except 1 and 6). Unless they were modified, devices with bases tipped over only rarely (see table 2), once in 400 tests on grass. On the other hand, the two devices without bases (1 and 6) tipped over more frequently on grass, 14 times in 100 tests (see table 2).(6 and 8)

In addition to testing large devices, the staff tested two devices with tube diameters less than or equal to 1.0 inch on grass and on 1.0-inch high density foam. With one of these devices, the tipover rate was significantly greater with foam than with grass (99 tipovers out of 100 on foam compared with 62 out of 100 on grass). This limited testing of small devices did not support such a dynamic test for small multiple tube devices.(6 and 8)

The staff concluded that the dynamic stability test it studied could not reasonably form the basis for a standard addressing the tipover hazard with large multiple tube devices. Particularly problematic was the dynamic test's inconsistency. Among the large devices, there were two cases (devices 1 and 6) in which foam significantly *over-predicted* the tipover rate with grass. This means that a device could fail to comply with such a dynamic standard even though it is stable when tested on grass. In other words, such a standard would be excessively stringent.(6 and 8)

In another case (device 3) foam significantly *under-predicted* the tipover rate with grass. This means that a device could be very unstable when operated on grass but could actually comply with such a dynamic standard based on the foam test.(6 and 8) Such a standard would not reliably protect consumers.

In statistical terminology, the lack of agreement between foam and grass is due to a highly significant ''interaction'' between the device and test surface. That is, different devices behave differently on different foams, and one cannot predict which foam (if any) would be appropriate for which device. Thus, the staff determined that there was not sufficient agreement between tipover rates on 1.0-inch thick high density foam and on grass.(8)

Moreover, the sensitivity of the dynamic stability test is limited. In other words, unless a device is very unstable and tips over in frequent firings, the chances of discovering its tipover potential are low. It would require observing a very large number of samples to increase the chance of detecting a tipover. This is impractical for routine compliance testing.(8) Use of a sensitive test is important for these devices because a tipover can lead to a fatality.

3. The Tip Angle Test

Because the testing on foam did not provide a reliable dynamic test, the staff considered whether a static test based on the physical properties of large multiple tube devices could be developed. The staff measured the dimensions, mass and static tipover resistance (''tip angle'') of all the devices tested. The angle at which a device will first tip over depends on its base-height ratio, mass and center of gravity. A device's dynamic stability—i.e., its ability to remain upright—depends on its tip angle as well as other factors such as its lift force, the firing order, and the time between firings. As explained below, the staff found that tip angle was one measure that could predict qualitatively whether a device would tip over while functioning and also be sufficiently sensitive for routine compliance testing.(9)

The staff measured the tip angle of devices by placing one edge of the device against a mechanical stop approximately 1/16-inch high (to prevent sliding) at the edge of a horizontal hinged platform. The platform was slowly raised from the horizontal until the device tipped over. The tip angle was considered to be the angle at which the device first tips over. The test was repeated for each edge of the device to determine the minimum tip angle. In this manner, the staff measured the tip angle for the nine large devices that had been subjected to the dynamic tests, including the unmodified forms of devices 2, 3, and 4.(9)

The staff then compared these measurements and the results of the dynamic tests to determine whether there was a relationship between the minimum tip angle of a device and its dynamic stability on grass (see table 3).(9)

TABLE 3.—STATIC TIPOVER RESISTANCE AND DYNAMIC TIPOVER RATE OF LARGE MULTIPLE TUBE DEVICES

Minimum tip angle (degrees)	Tipover rate on grass		Device
	Percent	Incidence	
37	64	32/50	[a] 2
37	20	10/50	6
37	8	4/50	1
35, 42 [b]	54	27/50	[a] 3
40	60	30/50	[a] 4
61	0	0/90	5
64	0	0/50	7
65	2.5	1/40	4
68	0	0/40	2
69	0	0/50	9
70	0	0/40	3
78, 80 [b]	0	0/90	8

[a] Device modified to increase tipover rate.
[b] Different samples of same device.

The staff conducted supplemental tests on large devices other than those it had examined when considering a dynamic test. One device was a modified form of device 1, that originally had no base. The staff glued a 12 inch (30.5 cm) square particleboard base to the device. With this modification, the tip angle increased from 37 degrees to 68 degrees. The tipover incidence on grass also decreased, from 4/50 to 0/50. The additional test with this device demonstrates that a device can be modified by adding a base, and the device's stability will improve.(9)

The second additional device that the staff tested, an imported one, had a square plastic base. The tip angle of this device ranged from 54 to 55 degrees (based on measurements of four individual samples) and it did not tip over in 50 tests on grass.(16) [3]

Because none of the seven devices originally tested had tip angles between 43 and 61 degrees, the staff modified the base of a device with a large

[3] The staff previously tested this type of device (tip angle: 52–55 degrees and tipover rate: 2/40), but the bases of some of the devices were cracked. Therefore, the staff does not consider the earlier tests to be reliable and has not considered them in determining an appropriate tip angle.(10 and 11)

particleboard base to obtain a tip angle near 50 degrees. The staff trimmed 2 and 1/16 inches off of the two long edges of the base. The minimum tip angle of the device ranged from 50 to 51 degrees (based on measurements of eight individual samples) and it tipped over in 33 out of 51 tests on grass.(16) Table 4 shows the tip angle and tipover rate of the three additional devices that the staff tested.

TABLE 4.—STATIC TIPOVER RESISTANCE AND DYNAMIC TIPOVER RATE OF ADDITIONAL LARGE MULTIPLE TUBE DEVICES [a]

Minimum tip angle (degrees)	Tipover rate on grass		Description of device
	Percent	Incidence	
50–51 [b]	65	33/51	Four-tube device with base. Base trimmed to obtain 50 degree tip angle.
54–55 [b]	0	0/50	Seven-tube device with plastic base.
68	0	0/50	Seven-tube device. Same as device 1, but with added 12 inch base.

[a] Does not include devices that the staff considered to present inconclusive results.
[b] Range of values for replicate samples.

The Commission is proposing a standard requiring that large multiple tube devices must have a minimum tip angle above 60 degrees. The Commission's data indicate that substantially all of the devices measuring a tip angle above 60 degrees did not tip over while functioning on grass. Among such devices, there was only one tipover in 450 tests. On the other hand, devices with tip angles below 60 degrees had tipover rates as high as 65 percent.

The Commission believes that requiring devices to have minimum tip angles above 60 degrees offers an appropriate margin of safety. The fact that no tipovers were observed with a device that had a tip angle of 54–55 degrees might appear to suggest that a tip angle of 54 degrees would be sufficient to protect against the tipover hazard. However, a device that had a tip angle of 50–51 degrees had an unusually high incidence of tipovers (33/51), as compared with previous tests. Thus, it is likely that some devices with 55 degree tip angles would tip over when tested on grass. The Commission concludes that in order to adequately protect the public, it is appropriate to require that the minimum tip angle be above 60 degrees.

The staff also measured the tip angles of the two small devices tested in dynamic tests. The staff did not find a relationship between the tip angle of these devices and their performance on grass.(9) This preliminary testing indicates that additional work would be required to find a proper test for the small devices.

G. Comments Responding to the ANPR

The Commission received 131 comments in response to the ANPR published on July 1, 1994. While many commenters opposed banning multiple tube fireworks devices, several commenters supported more limited action, such as a performance standard or additional labeling. The significant issues and the Commission's responses are summarized below.

1. A Possible Ban

a. *Banning multiple tube fireworks.* Many commenters opposed banning multiple tube fireworks for use by consumers. Most were consumers stating that a ban would deprive them of their enjoyment of this product, with its unique quality of repeating devices using one fuse and its resemblance to public display fireworks. Commenters opposing a ban also included professional fireworks display technicians, manufacturers, distributors, and retailers.

Some commenters took the opposite view, favoring the option of banning multiple tube devices. These commenters included the National Fire Protection Association (''NFPA''), the Fire Marshall's Association of North America and the U.S. Eye Injury Registry. They argued that the other alternatives mentioned in the ANPR would not be as effective in reducing injury.

The Commission in its ANPR stated that one possible outcome of the rulemaking was a ban of all multiple tube mine and shell devices. A range of other less severe alternatives also was discussed. As explained above, the Commission is proposing a performance standard for large devices that would improve the stability, and thus the safety, of these devices, but still leave them available for consumers to purchase and display.

b. *Economic burden.* Many commenters argued that a ban of multiple tube devices would place a severe economic burden on manufacturers, distributors, and retailers of consumer fireworks. Some of these commenters reported that product modifications would result in per unit cost increases of 16-to-33 percent.

A ban might create a severe economic burden for some firms. However, the Commission is proposing a performance standard, rather than a ban, and it is expected that most products would comply with the standard without modification. The potential economic effect of the proposed standard is discussed in section H.

c. *Illegal fireworks.* Some commenters stated that a ban of multiple tube devices would encourage the spread of illegal fireworks and/or homemade devices.

As noted, however, the Commission is proposing a performance standard rather than a ban. In addition, it is expected that most products would not have to be modified to meet the standard and would continue to be available. The continued availability of these devices on the market, especially those that do not require modification to meet the standard, will be sufficient to avoid any increase in the use of illegal and/or homemade fireworks.

d. *Reduction in injuries.* Some commenters argued that there is no evidence that a ban or other regulation would reduce injuries.

Reports of deaths and injuries, as well as tests conducted by the staff, show that some multiple tube devices tip over during normal operation, resulting in the horizontal discharge of the device. Although the frequency of tipover during CPSC tests has declined in recent years, any tipover that occurs has the potential to cause injury or death. Therefore, it is reasonable to expect that a regulation designed to reduce the frequency of tipover will reduce the potential for injury and death.

2. A Possible Regulation Other Than a Ban

a. *New standards.* Many commenters, although they opposed a ban of multiple

tube mine and shell fireworks, stated that they were *not* opposed to less intrusive actions such as new standards, or additional labeling, and/or consumer education. Some commenters specifically stated that they favor a standard to reduce the potential for tipover.

As explained in this notice, the Commission is proposing a performance standard that would improve the stability, and thus the safety, of these devices but still leave them available for consumers to purchase and display.

b. *Labeling and education.* Some commenters stated that improved labeling and/or education are sufficient to address the tipover hazard.

In addressing a product hazard, it is most effective to remove the hazardous design features out of the product. The tipover hazard stems from the design of the product and could occur even if a user does read the warning label. Although some users may read and follow the information on a warning label, fireworks are frequently used at night when it is too dark for someone to read a warning label. Their frequent use at parties or celebrations further reduces the likelihood that warnings will be read and followed.

c. *Multiple tube devices have improved.* Some commenters argued that the design and quality of multiple tube devices have improved in recent years and that regulation is no longer necessary.

Although manufacturers have made design and quality changes and reduced the dynamic stability hazard of some large multiple tube devices since the two deaths, additional domestic and imported large multiple tube mine and shell devices have been distributed which tipped over while functioning during official CPSC compliance testing. During fiscal year 1994, 32 official samples of large multiple tube mine and shell devices were tested for possible tipover while functioning. All 24 imported samples and one domestic sample tipped over while functioning. Since design and quality changes and development of the voluntary standard for multiple tube mine and shell devices have not yet corrected the dynamic stability hazard, the staff believes a regulation addressing it is necessary.

d. *Existing regulations are sufficient.* Some commenters stated that existing regulations are sufficient and that poor quality products should be addressed on an individual basis.

Existing fireworks regulations under the FHSA do not address the tipover hazard with multiple tube mine and shell devices. The continued manufacture and distribution to consumers of devices which fail official compliance testing for this tipover hazard is evidence that the existing regulations and compliance actions on a case-by-case basis have not sufficiently eliminated the dynamic stability hazard.

3. General Regulatory Issues

a. *Innovations in fireworks design.* The NFPA commented that innovations in the industry make it difficult to develop adequate regulations. A standard that works for today's devices might be inadequate for new products.

The Commission agrees that it is not always possible to anticipate problems that may occur in the future. However, new fireworks products created by industry are still required to meet CPSC regulations that prescribe safety requirements for assorted fireworks devices. If new products have additional hazardous characteristics, CPSC can evaluate them and correct any hazards by working with industry or by promulgating a mandatory safety rule. Moreover, new products that pose a ''substantial product hazard'' can be addressed through the Commission's section 15 regulation. *See* 16 CFR part 1115. In short, manufacturers remain free to design new devices as long as their performance meets the CPSC safety requirements.

b. *Consumer responsibility.* Several commenters stated that the consumer should be responsible for using fireworks devices safely and that manufacturers should not have to guard against all conceivable misuses of their products.

Certainly, consumers must exercise caution when using fireworks. They should follow the use instructions provided and, particularly with multiple tube devices, set them on a level, smooth surface. The Commission's concern, however, is that even when set on a level patch of grass, these devices may tip over and cause injury or death. It is reasonably foreseeable that a consumer would set up these devices in an open field that is covered with grass and is relatively level. This is the kind of condition for which the staff designed its test procedures.

c. *Voluntary standards.* Many commenters stated that voluntary standards efforts are sufficient to address the tipover hazard. Some took the opposite view.

The AFSL has adopted a voluntary standard involving the use of polyurethane upholstery foam as a substitute test surface for grass. The AFSL standard specifies 1-inch foam for devices with any tube that has an inside diameter less than or equal to 1.0 inch and 2-inch foam for devices with any tube that has an inside diameter greater than 1.0 inch. However, AFSL has not provided CPSC with any statistical evaluation of the use of polyurethane upholstery foam as a substitute test surface. As explained above, CPSC staff did not find sufficient agreement between grass and foam in the tests that it conducted of the tipover rates of large multiple tube devices.

The AFSL standard also requires a ''tip angle'' of at least 18 degrees, whereas CPSC tests show that devices with tip angles less than 60 degrees may tip over during operation. Finally, AFSL has stated that *no* domestic products are certified to the standard and has not stated how many imported devices have been tested and certified. Nor has AFSL provided information regarding the number of products that meet the standard.

d. *Large and small diameter devices should be treated separately.* Some commenters stated that large and small diameter multiple tube devices should be treated separately, arguing that deaths were associated only with large diameter devices, while only minor injuries were associated with small devices. Another commenter argued that all multiple tube devices should be banned because it would be more difficult to enforce a ban that applies only to large diameter devices.

As explained above, the Commission is proposing a performance standard that would apply only to devices with inside diameters of at least 1.5 inches. In tests conducted by the staff, a performance standard based on the tip angle test did not appear to be appropriate for smaller devices. Additional work would be needed to develop a standard for smaller devices.

e. *Comment period.* Two commenters complained that the comment period was too short and came at the busiest time of the year for people in the fireworks industry.

The Commission believes that the comment period was adequate. The Commission provided 60 days for comments, which is the maximum amount of time allowed under the FHSA for comments on an ANPR. Over 100 comments were received. Consistent with Commission policy, the staff has considered comments received after the close of the comment period. Finally, all interested persons will have an additional opportunity to comment on the proposed rule.

f. *Rulemaking process and data analysis.* One commenter asked how the CPSC rulemaking process works. The same commenter asked who at CPSC analyzed the injury and death data and

what experience they have with multiple tube devices or other fireworks. The commenter also stated that public servants should be required to sign their work.

The process for developing a rule under section 2(q)(1)(B) of the FHSA is explained in section B above. The CPSC staff has been involved with fireworks safety since the agency's inception. Data on injuries and deaths are collected and analyzed by statisticians in the Directorate for Epidemiology and Health Sciences. In some cases, investigators are assigned to obtain additional information about specific incidents. Individual staff with experience in fireworks safety include laboratory scientists, statisticians, and compliance officers. Prior to issuing the ANPR, the staff prepared a briefing package for the Commission that included a briefing memorandum, technical reports, and a draft ANPR. The memorandum and technical reports identified their respective authors and were available to the public when they were forwarded to the Commission. At a public meeting, the staff briefed the Commission on the hazards associated with multiple tube devices.

g. *Unreasonable risk of injury.* Some commenters asked about the statement in the ANPR that the Commission has reason to believe that an ''unreasonable risk of injury'' may be associated with these devices. These commenters asked what constitutes an unreasonable risk, whether costs are considered, and why a complete ban is being considered if the Commission only states that the devices ''may'' present an unreasonable risk. Some commenters stated that the Commission should not try to protect consumers against all risks.

For several types of rulemaking proceedings, the Commission's statutes require a finding that the product to be regulated poses an unreasonable risk of injury. In this proceeding under section 2(q)(1)(B) of the FHSA, however, it is not necessary for the Commission to make an unreasonable risk finding. Thus, discussion of unreasonable risk in the ANPR was unnecessary. Nevertheless, the unreasonable risk inquiry is similar to the kind of analysis that is required for this proceeding. 15 U.S.C. 1262(i)(2).

In this proceeding, before the Commission can issue a final rule, it must determine that the potential benefits of its action concerning certain multiple tube devices bears a reasonable relationship to the potential costs. In other words, the anticipated costs cannot be out of proportion to the expected benefits. Through this inquiry, the Commission considers the likely consequences of its intended action. A similar cost-benefit inquiry is conducted when the Commission determines whether there is an unreasonable risk of injury.

The ANPR used the term ''may'' since the Commission makes only a preliminary determination at the time it issues an ANPR, which explains options the Commission is considering but does not itself impose any requirements. With regard to the question of the desirable level of protection from risk, the Commission's statutes do not direct it to seek a ''zero risk level.'' Rather, for the most part, the proper standard is that of unreasonable risk, as explained above.

4. Incidents Involving Multiple Tube Devices

a. *Number of incidents and relative risk.* Many commenters said that the small number of injuries and deaths associated with multiple tube devices or Class C fireworks does not justify further regulation. Several commenters compared the risk of a fireworks incident with other consumer products or activities such as bicycling or other sports. They argued that because there are fewer injuries associated with fireworks, little benefit would result from any Commission action. Some commenters also argued that, compared with other fireworks devices, there were relatively few incidents with multiple tube devices.

Many factors are considered before the Commission determines whether to pursue action to address a risk posed by a consumer product. The number of injuries or deaths associated with a product is only one of those factors. For example, the Commission also considers the severity of the hazard. Here, the Commission has reports of two deaths associated with large multiple tube devices. Clearly this represents the most severe of possible harms. The Commission also considers the risk of injury, which depends on exposure. As compared to the other products and activities cited by the commenters, exposure to fireworks devices is infrequent and only for short periods of time. In addition, the Commission considers how susceptible the hazard is to a remedy. The number of incidents with other products may be greater, but their amenability to a regulatory remedy may not be as great.

Even though the documented number of fatalities and estimated number of hospital emergency room-treated injuries is relatively low, CPSC field tests have found that large multiple tube devices have the potential for serious injury or death due to tipover during use. Moreover, the number of incidents reported to CPSC is not the limit on the number that may have occurred. Except for a 1992 special study, fireworks incidents have not been routinely assigned for investigation. Therefore, the cases identified represent only the minimum number that may have injured consumers.

b. *Nature of incidents.* Some commenters said that the fatalities were ''freak'' occurrences or were the result of misuse.

The circumstances documented in the two fatalities should not be considered as ''freak'' occurrences or outside CPSC's regulatory authority, because they involved normal and foreseeable use of the product. The incidents are described in detail in section D above. Both incidents occurred during family gatherings a day or two after the July 4th holiday. The large devices were purchased and ignited for aerial sequence, the multiple tube devices tipped over and a projectile load struck a bystander resulting in death. The bystanders thought that they were a safe distance away. Circumstances, such as those indicated above, commonly occur at gatherings of families or friends.

c. *Severity of injuries.* Three commenters claimed that the injuries were not severe.

Two documented burn injuries associated with the tipover of small multiple tube mine and shell fireworks devices were investigated by Commission staff in 1992. The CPSC staff does not consider these burn injuries to be minor in nature. In the first report, the victim received a second degree thermal burn on her right lower leg while watching a fireworks display in the back yard of a friend's home. She has permanent scars on her leg as a result of the incident. In the second report, a 3-year-old boy received a burn to his left inner forearm and left thigh when a multiple tube tipped over after firing three shots and fired the fourth shot horizontally along the ground and into the boy's lap. The child was given first aid and later taken to the hospital emergency room for additional treatment for second degree burns. At any rate, the severity of injuries with small devices is immaterial here because the Commission's proposed regulation addresses only large devices, with which there have been at least two deaths.

d. *Personal experience.* Many commenters, including both consumers and technicians, said that in their personal experience, multiple tube devices and/or Class C fireworks have not tipped over or caused few or no injuries.

However, the cases show that there have been at least two deaths with these devices and the potential for tipover is high under certain conditions of foreseeable use. It is foreseeable that the tipover hazard may result in serious injury or death.

e. *Whether device associated with a fatality was illegal.* Some commenters said that one of the devices that was associated with a fatality was illegal.

Only one of the large multiple tube mine and shell devices involved in the two deaths was definitely identified by brand name. Tests of additional units of that device indicated it complied with the fireworks regulations of the FHSA, which are enforced by CPSC. Some devices, although legal under the FHSA fireworks regulations, may be illegal under state, local or other federal laws. Available information indicates that in the states where the deaths occurred, the purchase, possession and/or use of large multiple tube mine and shell devices are restricted or prohibited. However, the devices involved in both deaths are legal under the FHSA fireworks regulations as long as they conform to the applicable labeling and performance requirements. Regardless of whether a particular device violated the law of a state or locality, it may still be appropriate to provide federal regulation.

f. *Lack of perception of danger.* One commenter stated that consumers and spectators do not perceive the danger of fireworks.

The Commission agrees that victims of fireworks injuries may not perceive the potential danger of watching a private fireworks exhibition featuring multiple tube fireworks devices. Two people have died after being hit by a mine from a multiple tube device that tipped over during use. It is possible that neither victim perceived that they were in danger for the following reasons:

- The fireworks device was not pointing towards them when ignited.
- Each victim was approximately 40 feet from the device.

5. Technical Issues

a. *Proposed precautions.* Several commenters proposed various precautions to prevent tipover, such as using bricks to hold the device down. Some suggested safety equipment such as goggles and a minimum distance for spectators.

Staff believes that there are several valid safety precautions for small multiple tube devices. These include the use of bricks to hold a functioning device down, the use of bricks or cinder blocks as a hard flat firing surface (if of sufficient size to prevent the device from bouncing off during its functioning), the use of goggles for eye protection, and a minimum distance of 70-to-100 feet for spectators.

However, using bricks or cinder blocks as a hard flat firing surface could create an extremely dangerous situation if the firing area is too small to prevent the devices from falling or bouncing off and tipping over. With large devices, normal safety goggles would be unlikely to prevent impact injuries to the eye.

Requiring a minimum distance of 70-to-100 feet would not be effective with the majority of the large multiple tube devices, since these devices shoot their shells 200-to-600 feet into the air. For other than professional fireworks displays, it is impractical to suggest that spectators stand this distance from fireworks while they are being fired.

b. *Proposed technical fixes.* Commenters proposed various technical fixes to reduce tipover such as:

- Increasing the base-to-height ratio by increasing the base size;
- Lowering the center of gravity by increasing the base weight;
- Reducing the lift force;
- Requiring hold down spikes driven into the ground;
- Attaching support wires to the device which can then be staked into the ground.

All of these ideas are valid methods to reduce tipover. The last two, however, require the consumer to take steps to render the device safe that may not be feasible in certain circumstances. For instance, spikes cannot easily be driven into concrete or asphalt surfaces, nor can support wires. Moreover, consumers firing a variety of fireworks devices at night may not remember or be able to read specific instructions accompanying the different devices.

c. *Relative safety of multiple tube fireworks.* Two commenters stated that multiple tube devices are safer than other fireworks devices because they have a larger base.

Not all multiple tube mine and shell devices have a large base. In fact, some have no base. Others have bases that vary in size from a few inches in diameter to sizes greater than a foot in diameter. The safety of a device is not dependent only on the size of the base. Other factors, such as the firing sequence, internal fuse burn times, projectile launching force, shell weight, device shape, center of gravity, quality of materials and construction, and how the consumer uses the device, all enter into the safety of a device. However, several of these factors are addressed by the tip angle. As explained above, devices with bases were not as likely to tip in the staff's testing as those without bases.

6. General Issues

a. *Uses and benefits of fireworks.* The Commission received many comments concerning the general use and benefits of fireworks. Many commenters noted the importance of fireworks to their celebration of the nation's birthday, stressing the beauty and patriotism of these occasions. Some commenters noted the use of fireworks for various purposes, including agriculture, religious celebrations, and fostering an interest in science.

The Commission understands the important role that fireworks can play and the enjoyment that people receive from watching these displays. Narrowly tailored action to improve the safety of the devices will not prevent consumers from continuing to enjoy fireworks, and will increase safety.

b. *Over-regulation.* One commenter stated that the Commission's proceeding conflicts with efforts to reduce the size and cost of the federal government and that the agency is over-regulating. Another commenter stated that the Commission was over-regulating because this type of regulation is really a ''states' rights'' issue.

The Commission is a major participant in efforts to ''re-invent'' government by making it more efficient and less costly. This means that the Commission must find efficient ways to achieve its mission of protecting consumers from unreasonable risks of injury associated with consumer products. Consistent with the detailed statutory findings the Commission must make to issue a rule, the Commission uses its regulatory authority sparingly. However, it does not mean that the Commission should abandon its mission. The Commission believes that a performance standard will reduce the risk of injury and death associated with multiple tube fireworks devices with the least burden possible.

With regard to states' rights, the FHSA specifically recognizes fireworks as products that the Commission may regulate. 15 U.S.C. 1261(q)(1)(B). Of course, states can issue some regulations that the Commission cannot: The Commission does not have the authority to regulate the *use* of a product. For example, states or local governments may pass legislation requiring that bicycle riders wear helmets. The Commission cannot issue such requirements. Many states do in fact have requirements for fireworks that are more stringent than CPSC's. The Commission's fireworks regulations do not preempt more restrictive state or

local requirements. *See* 15 U.S.C. 1261n(b)(4).

c. *Support of regulation.* One commenter asked who supports further regulation of fireworks and what their relationship is to CPSC.

Based on the comments received in response to the ANPR, the NFPA, Fire Marshals Association of North America (FMANA), and United States Eye Injury Registry (USEIR) favor a ban of multiple tube devices. The NFPA and FMANA maintain that only licensed professionals should be permitted to use fireworks. Other commenters, such as AFSL and the family of one of the victims, favor additional regulation of multiple tube devices. Many consumers stated that they oppose a ban of these devices, but most of them also stated that they do not oppose a mandatory performance standard or improved labeling. None of these groups or individuals has any special relationship to CPSC other than as parties interested in the Commission's activities.

H. The Proposed Standard

The Commission is proposing a standard requiring that multiple tube devices that have any tube measuring 1.5 inches (3.8 cm) or more in inner diameter must have a minimum tip angle greater than 60 degrees. Large multiple tube devices that do not meet the tip angle requirement would be banned. The tip angle may be measured by placing the device on an inclined plane, that is, a smooth surface inclined at an angle 60 degrees from the horizontal. The tip angle of each edge of the device must be measured. The device must not tip over from the 60 degree angle when measured at any edge of the device.

An apparatus or ''testing block'' for testing multiple tube devices is illustrated in the figure below. The height and width of the inclined plane (not including the portion of the plane below the mechanical stop) must be at least 1 inch (2.54 cm) greater than the largest dimension of the base of the device(s) to be tested. The test apparatus must be placed on a smooth, hard surface that is shown to be horizontal with a spirit level or equivalent instrument. The mechanical stop must be 1/16 inches (1.6 mm) in height and perpendicular to the inclined plane. The stop must be positioned parallel to the bottom edge of the inclined plane and in such a way that no portion of the device to be tested or its base touches the horizontal surface.

BILLING CODE 6355–01–P

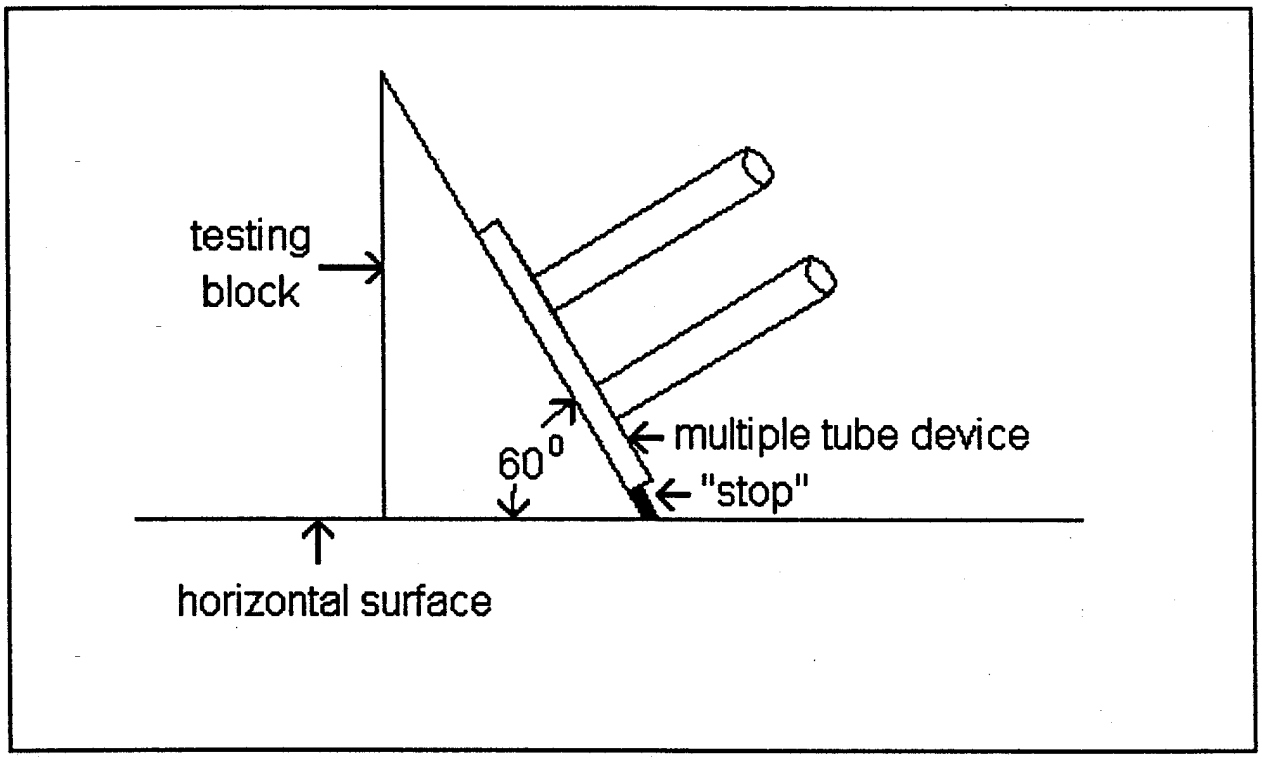

Side view of an apparatus or testing block for testing compliance with the proposed 60 degree tilt angle standard.

BILLING CODE 6355–01–C

Any device that cannot be tested using the apparatus described above or that presents a tipover hazard while functioning even though it complies with the static test, may be examined to determine whether it presents a ''substantial product hazard'' under section 15 of the Consumer Product Safety Act. 15 U.S.C. 2064. If the Commission determines that a substantial product hazard exists, then appropriate enforcement action may be taken.

The Commission notes that all of the devices tested complied with the voluntary standard's limitation of 12 grams of lift powder per tube. The Commission encourages manufacturers to continue to follow this aspect of the voluntary standard since the amount of lift charge may affect tipover. If the Commission observes large devices with more than 12 grams of lift powder, the Commission could revisit this issue.

1. Potential Effect on Reduction of Injuries

The Commission is aware of two deaths involving the tipover of multiple tube devices with tubes that have an inside diameter of 1.5 inches or more. The Commission is proposing a performance standard that would require these devices to have a

minimum tip angle greater than 60 degrees. According to the Commission's tests, devices that do not tip over below this angle are not likely to tip while functioning. Thus, the Commission believes that devices meeting this requirement are not likely to fall over while firing and injure operators and spectators.

2. Potential Effect on Consumer Choice and Cost

The proposed standard would only affect large multiple tube devices. Because most large multiple tube devices currently available already meet the proposed standard, the proposed standard would likely have little effect on consumer choice. Devices that do not have a base would have to add one, but consumers are not likely to perceive any significant loss of enjoyment as a result. While some devices may be discontinued, loss of consumer choice would be minimized by the availability of devices that do comply with the standard. Smaller multiple tube devices would continue to be available without any change.

Some number of large devices may have to be modified to add bases. But, current information indicates that about 25 percent of the large devices would have to be modified. The price of these devices could increase by 25 to 30 percent per unit to comply with the standard.(13)

3. Potential Effect on Industry

Although some changes in production may be made if the proposed amendment were issued on a final basis, the effect on overall production costs is not expected to be large. As explained above, most devices already comply with the standard. Modifying those that do not would add approximately 25 to 30 percent to retail costs, according to trade and industry sources. This modification would generally consist of adding a base to devices that do not currently have one.(13)

I. Alternatives

1. Ban

In the ANPR, the Commission stated that two possible alternatives in this rulemaking were to ban all sizes of multiple tube mine and shell devices or to ban large devices. The Commission has decided not to propose either of these alternatives. Although a ban would reduce the risk of injury and death associated with these devices, the costs would be much greater than for a standard. As explained above, the Commission is not proposing any action concerning multiple tube devices with tubes less than 1.5 inches in diameter. Even a ban of only the large devices could be very costly since such a prohibition would eliminate all such devices, which have sales of approximately $24 to $36 million annually.(13) The Commission believes that a ban of all large multiple tube devices is not necessary because a standard will achieve similar benefits with lower costs.

2. Additional Labeling

The current product has extensive labeling. The text of the labels is quoted in section C above. One alternative available to the Commission is to add further warning or instructional labeling to large multiple tube devices or to modify the existing warning. Although this may have less impact on manufacturers and importers than a performance standard, the Commission believes that any additional or altered labeling is unlikely to be effective in reducing the risk of injury.

Some users may read and follow warning labels. However, fireworks are frequently used at night, reducing the likelihood that warning labels will be read. Additionally, the fact that fireworks often are used at a party or celebration further reduces the likelihood that the user will take the time to read and follow a warning label. Moreover, tipover may occur even if the user reads and follows the warning label.(1, Tab E)

In both incidents involving large multiple tube devices, the victims were spectators who were approximately 40 feet (12 meters) away from the device. Both victims probably perceived that they were a safe distance from the device. The devices were placed on smooth, hard surfaces, although one was angled to shoot over a lake. In light of these facts, it is unlikely that a warning label would have prevented these deaths.(1, Tab E)

3. Voluntary Standard

A final alternative is for the Commission to take no mandatory action, but to encourage the development of a voluntary standard. The AFSL has developed a voluntary standard applicable to large multiple tube devices. AFSL's Interim Revised Voluntary Standard for Mines and Shells—Single or Multiple Shot (January 28, 1993) requires that large multiple tube devices not tip over (except as the result of the last shot) when shot on a 2-inch thick medium density foam pad. An AFSL representative anticipates that the standard will be finalized and approved by AFSL's Standards Committee and Board of Directors in the Fall of 1995.(14)

The Commission does not believe that AFSL's existing voluntary standard adequately reduces the risk of injury due to large devices tipping over while functioning. The Commission's tests using polyurethane foam did not find sufficient agreement between performance on foam and on grass. AFSL has not made available to the Commission any data supporting its dynamic test.

In addition, even if the AFSL standard were effective, the Commission does not believe that compliance with the standard would be adequate. According to AFSL, not a single domestically manufactured device has been certified as complying with the AFSL standard. The majority of large multiple tube devices are domestic. An AFSL representative recently stated that AFSL is working to implement a certification program and hopes to certify some domestic devices by mid-June 1995. Although AFSL reports that some shipments of imported large devices have been tested and certified in China this year, AFSL has not stated the number of devices. Thus, the Commission has little evidence that compliance with AFSL's voluntary program would be adequate.(14)

J. Comment Period

In accordance with section 4 of Executive Order 12889 implementing the North America Free Trade Act, the Commission is providing 75 days for public comment on the proposed rule. The Commission is particularly interested in acquiring additional data on the effect the proposed standard would have on the price to the consumer, the costs to the manufacturer, and the benefits to be derived from fireworks that comply with the proposed standard.

K. Preliminary Regulatory Analysis

a. Statutory Requirement

The Commission has preliminarily determined to issue a performance standard that would require that multiple tube devices with any tube measuring 1.5 inches in inner diameter or larger must have a minimum tip angle greater than 60 degrees. Accordingly, as explained earlier in this notice, the Commission is preparing to take action under the FHSA to prohibit large multiple tube devices that do not meet the tip angle requirement. Section 3(h) of the FHSA requires the Commission to prepare a preliminary regulatory analysis. 15 U.S.C. 1261(h).

The following discussion addresses these requirements.

b. Introduction

The Commission is considering amending the FHSA fireworks regulations to establish new dynamic stability requirements for large multiple tube devices. Large devices are defined as having an inside tube diameter of 1.5 inches or greater. These devices present a tipover hazard when firing. In June 1994, the Commission voted to proceed with an ANPR to develop a mandatory standard to address the tipover hazard. Although the ANPR addressed both large and small multiple tube mine and shell fireworks devices, the Commission proposes that only large tubes be addressed in a standard to reduce the risk of injury from tipovers. The proposed standard will require that devices that do not remain stable at a 60 degree angle in prescribed tests would be banned hazardous substances. It is expected that devices not passing these tests will be able to comply with the standard by adding a base of adequate size.

c. Background

Large multiple tube devices, which are relatively new products, became popular in the mid 1980's. These devices typically consist of three or more tubes fused in a series to fire sequentially and grouped together, sometimes on top of a wooden base. These devices are designed to fire aerial shells, comets, or mines producing visual and audible effects from non-reloadable tubes. They are among the largest Class C fireworks available for direct consumer use.

The National Fireworks Association (NFA) reports that retail sales of these devices are between $24-$36 million annually, with an estimated 400,000 to 700,000 units sold per year. Prices range from $30 to $130 per unit, with most devices in the $50-$60 price range. The NFA reports that domestic devices account for about 75 percent of the market (by dollar volume) and somewhat less by unit sales. There may be hundreds of firms engaged in the manufacturing, importing, and distribution of these fireworks. Imported devices are primarily manufactured in China, and go through several wholesalers before reaching the retail vendor.

d. Requirements of the Rule

To amend regulations under the FHSA, the Commission is required to publish a preliminary and final regulatory analysis containing a discussion of various factors. These factors include a description of the potential benefits and potential costs of the rule, including any benefits and costs that cannot be quantified in monetary terms, and an identification of those most likely to receive the benefits and bear the costs. The regulations also require a description of any reasonable alternatives to the rule, together with a summary description of their costs and benefits, and a brief explanation of why such alternatives were not chosen. In addition, the Commission must address the requirements of Section 603 of the Regulatory Flexibility Act, which considers the effects on small firms, and the requirement for review pursuant to the National Environmental Policy Act.

e. Analysis of Proposed Standard

1. *Potential benefits.* One of the potential risks of injury associated with large multiple tube devices is the tipover hazard. The Directorate for Epidemiology and Health Science reports two deaths associated with the tip-over hazard from January 1, 1988 through December 1993. This averages to about 1 death every 3 years. The potential benefits of eliminating fatalities are about $5 million over a three year period based on the statistical value of life suggested in recent economic literature.[4] In addition, if there have been any unreported injuries or deaths, the potential benefits would be somewhat higher.

2. *Potential costs.* Most devices that already have bases will not have to be modified to meet the standard. The devices that will not have to be modified are generally domestically manufactured, and according to the NFA, account for at least 75 percent of the retail dollar volume of the market. The price of the remaining devices (mainly imports), representing $6 to $9 million in retail sales value, are expected to increase by 25 to 30 percent per unit in order to meet the standard.[5] Thus, the total annual cost to consumers of modifying the affected devices would be between 25–30 percent of retail sales, or between $1.5 million and $2.7 million. While the standard may result in certain devices being discontinued, the loss of consumer choice would be minimized by the availability of close substitutes that comply with the standard. If the changes eliminate one death every three years, the cost per life saved will be between $4.5 and $8 million.

f. Alternatives to the Rule

The Commission could consider several other alternatives, including: A product ban; modifying large and small tubes; and deferral to the voluntary standard.

1. *Product ban.* The expected benefits to society of banning all large multiple tube mine and shell devices would be one life saved every three years, the same as the potential benefits of the standard.[6] However, costs to society of a ban (as opposed to a standard) would be much greater, because under a ban consumers would not be able to use large tube devices. While these costs cannot be measured precisely, the fact that consumers are willing to spend $24-$36 million annually to buy the large tube devices suggests that the costs could be substantial.

2. *Modify large and small tubes.* Small multiple tube mine and shell devices are defined as having tubes with an inside diameter of less than 1.5 inches. Trade sources report that annual retail sales range from $600 million to $1 billion, with an estimated 50 million to 110 million units sold per year. There are an estimated 150 injuries per year with small devices and no reported fatalities. The total injury costs from these incidents are an estimated $750,000 per year. It is not certain what percentage of the market for small devices would be affected by a dynamic stability standard. However, observations from sales catalogues indicates that the majority of the small devices would have to be modified.

Given that annual retail sales are as high as $1 billion and that injury costs are less than $1 million per year, it is likely that the costs of applying the mandatory standard to small devices would be substantially greater than the benefits. For example, if 50 percent of the market for small devices had to be modified, then the total annual cost to consumers could be as high as $150 million.

3. *Defer to the voluntary standard.* The American Fireworks Standards Laboratory (AFSL) revised its standard for mines and shells on January 28, 1993, in order to address the potential tipover hazard associated with multiple tube mine and shell devices. The AFSL's revisions included a dynamic stability test for all multiple tube

[4] *See* Viscusi, W.K., ''The Value of Risks to Life and Health,'' *Journal of Economic Literature,* December 1993.

[5] Trade and industry sources report that modifying the devices would add about 25 to 30 percent to production costs. Additionally, anecdotal evidence from sales catalogues indicates that comparable devices without bases are significantly less expensive.

[6] The benefits might be somewhat higher if there are other hazards in addition to the tip-over hazard that are associated with multiple tube mine and shell fireworks devices. However, other hazards have not been identified.

devices. However, the Commission has concerns over the effectiveness of and conformance to the AFSL standard. Although AFSL has stated that some imported large devices have been tested and certified to its standard, the Commission does not know how many or which devices. Consequently, deferring to the voluntary standard might not address any of the fatalities.

L. Regulatory Flexibility Certification

Under the Regulatory Flexibility Act, 5 U.S.C. 601 *et seq.*, agencies are generally required to prepare proposed and final regulatory flexibility analyses describing the impact of the rule on small businesses and other small entities, unless the head of the agency certifies that the rule will not, if promulgated, have a significant effect on a substantial number of small entities. The Commission staff has analyzed the potential effect of the proposed amendment on industry. Available information suggests that the proposed standard will not have a significant impact on a substantial number of small businesses. While there are probably hundreds of small businesses engaged in the manufacturing, importing, and distribution of fireworks, the standard will only affect those firms involved in the production and distribution of large multiple tube devices that will need to be modified. As described above, the devices that will need to be modified account for only about 25 percent of the large multiple tube mine and shell devices that are sold in the U.S. Moreover, the standard will not affect the small multiple tube mine and shell devices which make up the bulk of the market. The devices subject to the standard constitute only a small segment of the overall fireworks market.

Thus, the Commission certifies that no significant adverse impact on a substantial number of small firms or entities would result from the proposed amendment.

M. Environmental Considerations

The Commission's regulations governing environmental review procedures provide that the amendment of rules or safety standards establishing design or performance requirements for products normally have little or no potential for affecting the human environment. *See* 16 CFR 1021.6(c)(1). The Commission does not foresee that this proposed amendment to the existing fireworks regulations would involve any special or unusual circumstances that might alter this conclusion.

The proposed standard is not expected to affect existing packaging, or materials in construction now in manufacturers' inventories. Existing inventories of finished products would not be rendered unusable through the implementation of the rules. Any remaining inventory not imported or manufactured after the effective date can probably be modified to meet the new standard.

The requirements of the standard are not expected to have a significant effect on the overall materials used in the production or packaging or in the amount of materials discarded after the standard goes into effect. Therefore, no significant environmental effects will result from the proposed standard.

Thus, the Commission concludes that no environmental assessment or environmental impact statement is required in this proceeding.

N. Effective Date

The rule will take into account the ordering season for fireworks and is proposed to take effect not earlier than 6 months from publication of the final rule in the **Federal Register**. It will apply to multiple tube fireworks devices with any tube measuring 1.5 inches or more in inner diameter that enter commerce or are imported on or after that date.

List of Subjects in 16 CFR Part 1500

Consumer protection, Hazardous materials, Hazardous substances, Imports, Infants and children, Labeling, Law enforcement, and Toys.

Conclusion

For the reasons given above, the Commission preliminarily finds that cautionary labeling required by the FHSA is not adequate for multiple tube devices with any tube 1.5 inches (3.8 cm) or larger in inner diameter and that, due to the degree and nature of the tipover hazard presented by these devices, in order to protect the public health and safety it is necessary to keep these devices out of commerce unless they have a minimum tip angle of at least 55 degrees. Thus, the Commission proposes to amend Title 16 of the Code of Federal Regulations to read as follows:

PART 1500—[AMENDED]

1. The authority for Part 1500 continues to read as follows:

Authority: 15 U.S.C. 1261–1278.

2. Section 1500.17 is amended to add a new paragraph (a) (12) to read as follows:

(a) * * *

(12) Multiple tube mine and shell fireworks devices that have any tube measuring 1.5 inches (3.8 cm) or more in inner diameter and have a minimum tip angle greater than 60 degrees in accordance with the requirements of § 1507.12.

* * * * *

PART 1507—[AMENDED]

1. The authority for Part 1507 continues to read as follows:

Authority: Sec. 2(q)(1)(B), (2), 74 Stat. 374 as amended 80 Stat. 1304–1305; (15 U.S.C. 1261); sec. 701(e), 52 Stat. 1055 as amended; 21 U.S.C. 371(e)); sec. 30(a), 86 Stat. 1231; 15 U.S.C. 2079(a)).

2. Part 1507 is amended to add a new § 1507.12 to read as follows:

§ 1507.12 Multiple tube mine and shell devices.

(a) *Application.* Multiple tube mine and shell devices with any tube measuring 1.5 inches (3.8 cm) or more in inside diameter shall be subject to the tip angle test described in this section.

(b) *Testing procedure.* The device shall be placed on a smooth surface which can be inclined at an angle greater than 60 degrees from the horizontal as shown in figure 1 below. The height and width of the inclined plane (not including the portion of the plane below the mechanical stop) shall be at least 1 inch (2.54 cm) greater than the largest dimension of the base of the device to be tested. The test shall be conducted on a smooth, hard surface that is horizontal as measured by a spirit level or equivalent instrument. The mechanical stop shall be 1/16 inches (1.6 cm) in height and perpendicular to the inclined place. The stop shall be positioned parallel to the bottom edge of the inclined plane and in such a way that no portion of the device to be tested or its base touches the horizontal surface. The device shall not tip over from the 60 degree incline. The procedure shall be repeated for each edge of the device.

BILLING CODE 6355–01–P

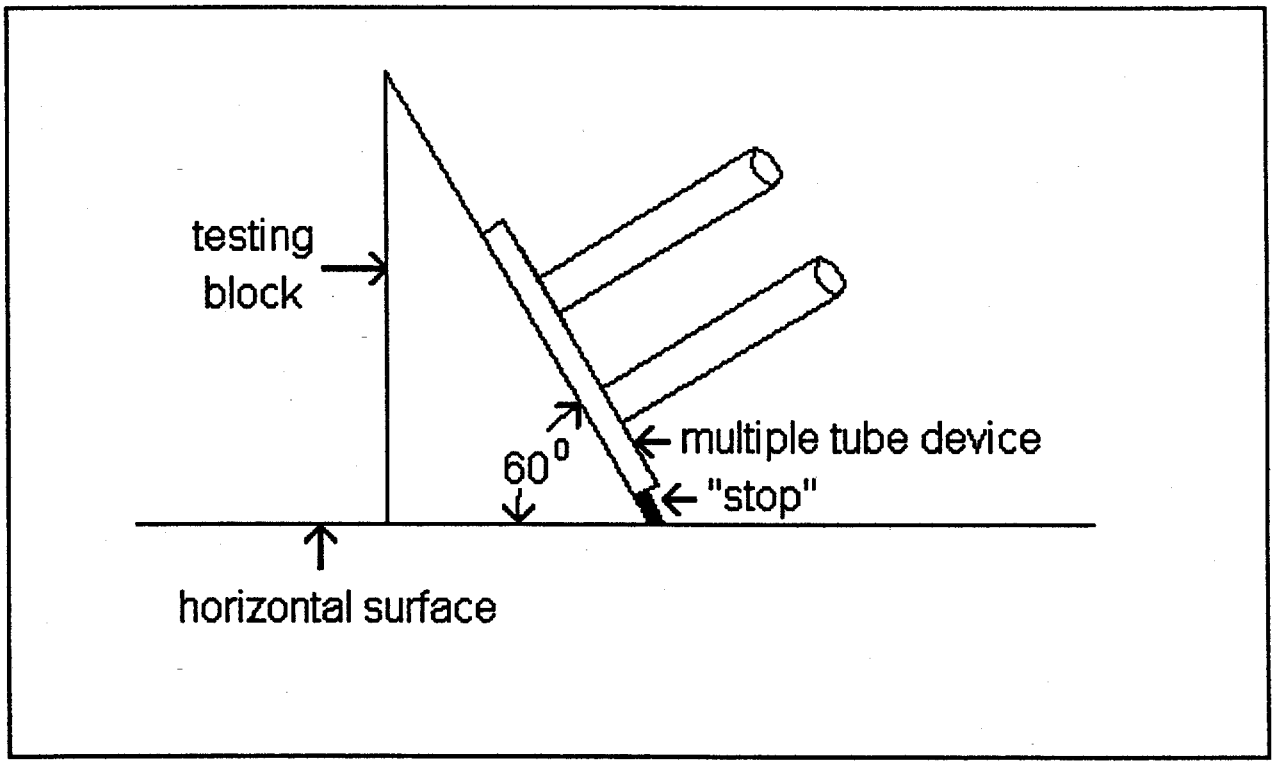

Figure 1

Side view of an apparatus or testing block for testing compliance with the proposed 60 degree tilt angle standard.

BILLING CODE 6355–01–C

Dated: June 27, 1995.

Sadye E. Dunn,

Secretary, Consumer Product Safety Commission.

Reference Documents

The following documents contain information relevant to this rulemaking proceeding and are available for inspection at the Office of the Secretary, Consumer Product Safety Commission, Room 502, 4330 East-West Highway, Bethesda, Maryland 20814:

1. Multiple Tube Mine and Shell Fireworks Devices: Advance Notice of Proposed Rulemaking; Request for Comments and Information, 59 Fed. Reg. 33928 (July 1, 1994).
2. Briefing Package: Multiple Tube Mine and Shell Fireworks Devices, Consumer Product Safety Commission, May 31, 1994.
3. Briefing Memorandum on Multiple Tube Mine and Shell Fireworks Devices, from Ronald L. Medford, HIR to the Commission, June 8, 1995.
4. Memorandum from Michael Babich, Project Manager, HSHE, ''Responses to Public Comments on Multiple Tube Mine and Shell Devices,'' May 22, 1995.
5. Memorandum from Leonard Schacter, EPHA, to Michael Babich, HSHE, ''Annual Estimated Injuries Associated with Multiple tube Mine and Shell Fireworks Devices,'' June 1, 1995.
6. Memorandum from James Carleton and Jay Sonenthal, LSHS, to Michael Babich, HSHE, ''Results for Dynamic Stability Testing of Large Multiple Tube Mine and Shell Devices, May 18, 1995.
7. Memorandum from Thomas Caton, ESME, to Michael Babich, HSHE, ''Fireworks Testing: Test Surface Roughness,'' May 22, 1995.
8. Report from Terry Kissinger, EPHA, to Michael Babich, HSHE, ''A Comparison of the Tipover Performances of Multiple Tube Mine and Shell Devices on Grass and Foam,'' January 1995.
9. Memorandum from George F. Sushinsky, LSEL, to Michael Babich, HSHE, ''Dimensional and Stability Measurements of Fireworks,'' March 10, 1995.
10. Memorandum from George F. Sushinsky, LSEL, to Michael Babich, HSHE, ''Tip Angle Measurements of a Device with a Plastic Base,'' April 13, 1995.
11. Memorandum from Jay Sonenthal, LSHL, to Michael Babich, HSHE, ''Test of a Device with a Plastic Base,'' May 22, 1995.
12. Memorandum from Sam Hall, CERM, to Michael Babich, HSHE, ''Acceptable Tipover Rate for Multiple Tube Devices,'' November 21, 1994.
13. Memorandum from Anthony Homan, ECPA, to Michael Babich, HSHE, ''Multiple Tube Mine and Shell Fireworks Devices—Regulatory Analysis,'' May 18, 1995.
14. Memorandum from Sam Hall, CERM, to Michael Babich, HSHE, ''AFSL's Interim Voluntary Standard for Large Multiple Tube Mine and Shell Devices and Staff's Proposed Mandatory Static Performance Standard, May 25, 1995.
15. Product and Performance Standard for Mines and Shells—Single or Multiple Shot,'' Version 1.1, American Fireworks Standards Laboratory, Bethesda, Maryland, January 28, 1993.
16. Memorandum from Neil Gasser, LSHL, to Michael Babich, HSHE, ''Additional Tests of Multiple Tube Mine and Shell Devices,'' June 8, 1995.

[FR Doc. 95–16313 Filed 7–3–95; 8:45 am]

BILLING CODE 6355–01–P

DEPARTMENT OF THE INTERIOR

Office of Surface Mining Reclamation and Enforcement

30 CFR Part 948

West Virginia Program Amendment

AGENCY: Office of Surface Mining Reclamation and Enforcement (OSM), Interior.

ACTION: Proposed rule; reopening and extension of public comment period.

SUMMARY: OSM is announcing the receipt of additional revisions to the West Virginia permanent regulatory

program (hereinafter referred to as the West Virginia program) under the Surface Mining Control and Reclamation Act of 1977 (SMCRA). The additional revisions pertain to a previously proposed amendment (WV–074) to West Virginia's Surface Mining Reclamation Regulations. The proposed revisions concern the definition of chemical treatment, ownership and control files, roads, as-built designs, noncoal mine waste, durable rock fills, small operator assistance and other matters. The amendment is intended to improve operational efficiency and revise the West Virginia program to be consistent with the corresponding Federal regulations and SMCRA.

DATES: Written comments must be received on or before 4 p.m. on July 20, 1995.

ADDRESSES: Written comments should be mailed or hand delivered to James C. Blankenship, Jr., Director, Charleston Field Office at the address listed below

Copies of the proposed amendment, the West Virginia program, and the administrative record are available for public review and copying at the addresses below during normal business hours, Monday through Friday, excluding holidays. Each requester may receive one free copy of the proposed amendment by contacting OSM's Charleston Field Office.

James C. Blankenship, Jr., Director, Charleston Field Office, Office of Surface Mining Reclamation and Enforcement, 1027 Virginia Street, East, Charleston, West Virginia 25301, Telephone: (304) 347–7158

West Virginia Division of Environmental Protection, 10 McJunkin Road, Nitro, West Virginia 25143, Telephone (304) 759–0515

In addition, copies of the proposed amendments are available for inspection during regular business hours at the following locations:

Office of Surface Mining Reclamation and Enforcement, Morgantown Area Office, 75 High Street, Room 229, PO Box 886, Morgantown, West Virginia 26507, Telephone: (304) 291–4004

Office of Surface Mining Reclamation and Enforcement, Beckley Area Office, 323 Harper Park Drive, Suite 3, Beckley, West Virginia 25801, Telephone: (304) 255–5265

Office of Surface Mining Reclamation and Enforcement, Logan Area Office, 313 Hudgins Street, 2nd Floor, PO Box 506, Logan, West Virginia 25601, Telephone: (304) 752–2851

FOR FURTHER INFORMATION CONTACT: Mr. James C. Blankership, Jr., Director, Charleston Field Office; Telephone: (304) 347–7158.

SUPPLEMENTARY INFORMATION:

I. Background

SMCRA was passed in 1977 to address environmental and safety problems associated with coal mining. Under SMCRA, OSM works with States to ensure that coal mines are operated in a manner that protects citizens and the environment during mining, that the land is restored to beneficial use following mining, and that the effects of past mining at abandoned coal mines are mitigated.

Many coal-producing States, including West Virginia, have sought and obtained approval from the Secretary of the Interior to carry out SMCRA's requirements within their borders. In becoming the primary enforcers of SMCRA, these ''primacy'' states accept a shared responsibility with OSM to achieve the goals of the Act. Such States join with OSM in a shared commitment to the protection of citizens—our primary customers—from abusive mining practices, to be responsive to their concerns, and to allow them full access to information needed to evaluate the effects of mining on their health, safety, general welfare, and property. This commitment also recognizes the need for clear, fair, and consistently applied policies that are not unnecessarily burdensome to the coal industry—producers of an important source of our Nation's energy.

Under SMCRA, OSM sets minimum regulatory and reclamation standards. Each primacy State ensures that coal mines are operated and reclaimed in accordance with the standards in its approved State program. The States serve as the front-line authorities for implementation and enforcement of SMCRA, while OSM maintains a State performance evaluation role and provides funding and technical assistance to States to carry out their approved programs. OSM also is responsible for taking direct enforcement action in a primacy State, if needed, to protect the public in cases of imminent harm or, following appropriate notice to the State, when a State acts in an arbitrary and capricious manner in not taking needed enforcement actions required under its approved regulatory program.

Currently there are 24 primacy states that administer and enforce regulatory programs under SMCRA. These states may amend their programs, with OSM approval, at any time so long as they remain no less effective than Federal regulatory requirements. In addition, whenever SMCRA or implementing Federal regulations are revised, OSM is required to notify the States of the changes so that they can revise their programs accordingly to remain no less effective than the Federal requirements.

On January 21, 1981, the Secretary of the Interior conditionally approved the West Virginia program. Background information on the West Virginia program, including the Secretary's findings, the disposition of comments, and the conditions of approval can be found in the January 21, 1981, **Federal Register** (46 FR 5915). Subsequent actions concerning the conditions of approval and program amendments can be found at 30 CFR 948.10, 948.12, 948.13, 948.15, and 948.16.

II. Discussion of the Proposed Amendment

In a series of three letters dated June 28, 1993, and July 30, 1993 (Administrative Record Nos. WV–888, WV–889 and WV–893), the West Virginia Division of Environmental Protection (WVDEP) submitted an amendment to its approved permanent regulatory program that included numerous revisions to the West Virginia Surface Coal Mining and Reclamation Act (WVSCMRA § 22A–3–1 *et seq.*) and the West Virginia Surface Mining Reclamation Regulations (CSR § 38–2–1 *et seq.*)

OSM announced receipt of the proposed amendment in the August 12, 1993, **Federal Register** (58 FR 42903) and invited public comment on its adequacy. Following this initial comment period, WVDEP revised the amendment on March 12, 1994, and September 1, 1994 (Administrative Record Nos. WV–933 and WV–937). OSM reopened the comment period on August 31, 1994, September 29, 1994, and May 19, 1995, and held public meetings in Charleston, West Virginia on September 7, 1993, October 27, 1994, and May 30, 1995.

OSM and WVDEP held a telephone conference on January 18, 1995, to discuss the States revisions to the program amendment which were submitted on September 1, 1994, and announced for public comment in the September 29, 1994, **Federal Register** (59 FR 49620). This meeting was followed-up by a letter on February 15, 1995, which identified provisions in the September 1, 1994, submittal where OSM either needed further clarification or where OSM believed the proposal was less effective than the Federal rules.

The WVDEP responded by revising and resubmitting the September 1, 1994, revisions on May 8, 1995 and May 16, 1995, (Administrative Record Nos. 979A and 979B). These revisions were passed by the West Virginia Legislature as House Bill—2134. Also included were

new State initiatives found in Senate Bills—287 and 350, and House Bill—2523.

This notice requests public comment on the revised program revisions and new initiatives submitted to OSM by the WVDEP on May 8, 1995 and May 16, 1995. These revisions include the following:

1. CSR 38–2–2.92 Definitions

The WVDEP proposes to define ''chemical treatment'' as it applies to the prohibition of bond release where water treatment is necessary to bring point source discharges into compliance with effluent standards.

2. CSR 38–2–3.1(o) Ownership and Control File

The WVDEP proposes to add a provision which will allow permittee, upon request and with the approval of the Director, to submit and maintain a centralized ownership and control file. Any permit application which references an approved centralized ownership and control file may be determined to be complete and accurate for all permitting actions including revisions, transfers, assignments and sales.

3. CSR 38–2–3.26 Ownership and Control Changes

The WVDEP proposes to add provisions governing the reporting of name changes, replacements, and additions to the ownership and control information for any surface mining operation or permittee. The permittee or operator is required to notify the Director if no changes have occurred.

4. CSR 38–2–3.27(a) Permit Renewals

The WVDEP proposes to add a provision which will allow the Director to waive the requirements for permit renewal if the permittee certifies in writing that all coal extraction is completed, that all backfilling and regrading will be completed within 60 days prior to the expiration date of the permit and that an application for Phase I bond release will be filed prior to the expiration date of the permit. Failure to complete backfilling and regrading within 60 days prior to the expiration date of the permit will nullify the waiver.

5. CSR 38–2–3.34 (b), (g) Improvidently Issued Permits

The WVDEP proposes to amend paragraph (b) by inserting the phrase ''in paragraph (b) of subsection 3.32 of this section'' to clarify that if a permit is issued at a time in which the applicant was in violation of environmental laws that the permit was improperly issued and must be withdrawn. Paragraph (g) is being revised to clarify that permit issuance includes permit revisions for ownership and control purposes.

6. CSR 38–2–4.4 Infrequently Used Access Roads

The WVDEP proposes to add a provision requiring infrequently used access roads to be designed to ensure environmental protection appropriate for their planned duration and use, and to be constructed in accordance with current prudent engineering practices and any necessary design criteria established by the Director. A statement has been added to clarify that prospecting roads are to be designed, constructed, maintained, and reclaimed in accordance with subsection 13.6 which governs prospecting roads. Cross references have also been revised.

7. CSR 38–2–4.7(a)(1) Performance Standards for Roads

The WVDEP proposes to add a new provision requiring that each road be designed, located, constructed, maintained, and reclaimed so as to minimize downstream sedimentation and flooding.

8. CSR 38–2–4.12 Certification

The WVDEP proposes to add a provision requiring that, where the certification statement for a primary road indicates a change from design standards or construction requirements in the approved permit, such changes must be documented in as-built plans and submitted as a permit revision.

9. CSR 38–2–13.6 (a)(7), (f)(6) Prospecting Roads

WVDEP proposes to correct a typographical error at paragraph (a)(7) and to revise paragraph (f)(6) by requiring topsoil removal and replacement in accordance with section 14.3.

10. CSR 38–2–14.14(g)(8) Durable Rock Fills

The WVDEP proposes to amend its rules to require that surface runoff from areas above and adjacent to durable rock fills be diverted into channels which have bee designed using the best current technology available to safely pass the peak runoff from a 100 year, 24-hour precipitation event. The channel must be designed and constructed to ensure stability of the fill, control erosion, and minimize infiltration into the fill.

11. CSR 38–2–14.15(M) Coal Processing Waste Disposal

The WVDEP proposes to add provisions governing the placement of coal processing waste in the backfill. Disposal facilities must be designed using current prudent engineering practices and must meet any design criteria established by the regulatory authority. Designs must be certified by a qualified registered professional engineer. Under the proposal, no coal processing waste that contains acid-producing or toxic-forming material may be placed in the backfill.

12. CSR 38–2–14.19 Disposal of Noncoal Waste

WVDEP proposes to add provisions to regulate the disposal of noncoal waste such as grease, lubricants, garbage, abandoned machinery, lumber and other materials generated during mining activities. Under the proposal, final disposal of noncoal waste will be in accordance with a permit issued pursuant to Chapter 22, Article 15 of the Code of West Virginia (Solid Waste Management Act). Timber from clearing and grubbing operations may be wind-rowed at the projected toe of the outslope.

13. CSR 38–2–17 Small Operator Assistance

WVDEP proposes to increase the production limit of those operators eligible for assistance under the Small Operator Assistance Program (SOAP) from 100,000 to 300,000 tons and to provide for payment of additional services as authorized under the Energy Policy Act of 1992. WVDEP is also proposing to provide for interstate coordination and exchange of information collected under SOAP.

14. CSR 38–2–17.3(b) Eligibility for Assistance

WVDEP proposes to use the total attributed annual production in determining eligibility for assistance under SOAP. Production from operations where the applicant owns more than a 10 percent interest will be attributed to the applicant.

15. CSR 38–2–17.4 Request for Assistance

WVDEP proposes to require SOAP applicants to provide information on forms provided by the Director of WVDEP.

16. CSR 38–2–17.7 (a)(4) Liability of SOAP Operators

The WVDEP proposes to clarify that SOAP applicants will be liable for the cost of program services performed if

actual and attributed production for all locations exceed 300,000 tons during the 12 month period immediately following permit issuance.

17. CSR 38–2C–4 Training of Blasters

WVDEP proposes to add a provision that would allow applicants for certification or recertification to complete a self-study course in lieu of the existing training program. Self-study materials would be provided by the WVDEP.

18 CSR 38–2C–10.1 Violations by a Certified Blaster

WVDEP proposes to remove language authorizing the Director to issue a cessation order and/or take other action as provided by the WVSCMRA § 22–3–16 and 17 when a certified blaster is in violation of WVSCMRA § 22–3–1. The Director retains his authority to issue a notice of violation.

19. CSR 38–2C–11 Penalties

WVDEP proposes to revise its rules to provide for a hearing before the Director to show cause why a blasters certification should not be suspended.

20. CSR 38–D–4.4(b) Reclamation Objectives and Priorities

WVDEP proposes to clarify its objectives and priorities for abandoned mine lands reclamation projects by indicating the provision applies to ''past' coal mining practices which may or may not constitute an extreme danger.

21. CSR 38–2D–6.3(a) Acceptance of Gifts of Land

WVDEP proposes to remove the requirement that the director accept gifts of land in accordance with Department of Justice procedures for the acquisition of real property.

22. CSR 38–2D–8.7(a) Grant Application Procedures

WVDEP proposes to remove provisions which describe the procedures for submitting a grant application to OSM for the reclamation of abandoned mine lands.

23. WV § 22B–3–4(c) Environmental Quality Board Rulemaking Authority

WVDEP proposes to authorize the Environmental Quality Board to grant variances to in-stream water quality standards for coal remining operations. The standards established in the variance would exist for the term of the NPDES permit. Under the proposal, the Board will promulgate procedural rules on granting site-specific coal remining variances. At a minimum, the procedures would include a description of the data and information required from an applicant for a variance, criteria employed by the board in its decision, and provisions for public comment and hearing. The proposed rule gives direction as to when a variance may be granted.

WVDEP gave notice to OSM that WVSCMRA § 22–3–8–6(B) was being revised to require that an operator provide the Director with proof of payment of workers compensation premiums on an annual basis, and that § 22–1–6(D)(7) was being revised to authorize the Director to employ in-house council to perform all legal services. The director finds that these revisions do not require an amendment to the West Virginia State Program pursuant to 30 CFR 732.17(c).

III. Public Comment Procedures

OSM is extending the comment period to provide the public an opportunity to comment on the proposed revisions in the State program. In accordance with 30 CFR 732.17(h), OSM is seeking comments on whether the proposed amendment satisfies the applicable program criteria of 30 CFR 732.15. If the amendment is deemed adequate, it will become part of the West Virginia program.

Written Comments

Written comments should be specific, pertain only to the issues proposed in this rulemaking, and include explanations in support of the commenter's recommendations. Comments received after the time indicated under **DATES** or at locations other than the OSM Charleston Field Office will not necessarily be considered in the final rulemaking or included in the Administrative Record.

IV. Procedural Determinations

Executive Order 12866

This rule is exempted from review by the Office of Management and Budget (OMB) under Executive Order 12866 (Regulatory Planning and Review).

Executive Order 12778

The Department of the Interior has conducted the reviews required by section 2 of Executive Order 12778 (Civil Justice Reform) and has determined that, to the extent allowed by law, this rule meets the applicable standards of subsections (a) and (b) of that section. However, these standards are not applicable to the actual language of State regulatory programs and program amendments since each such program is drafted and promulgated by a specific State, not by OSM. Under sections 503 and 505 of SMCRA (30 U.S.C. 1253 and 1255) and 30 CFR 730.11, 732.15 and 732.17(h)(10), decisions on proposed State regulatory programs and program amendments submitted by the States must be based solely on a determination of whether the submittal is consistent with SMCRA and its implementing Federal regulations and whether the other requirements of 30 CFR Parts 730, 731, and 732 have been met.

National Environmental Policy Act

No environmental impact statement is required for this rule since section 702(d) of SMCRA (30 U.S.C. 1292(d)) provides that agency decisions on proposed State regulatory program provisions do not constitute major Federal actions within the meaning of section 102(2)(C) of the National Environmental Policy Act (42 U.S.C. 4332(2)(C)).

Paperwork Reduction Act

This rule does not contain information collection requirements that require approval by OMB under the Paperwork Reduction Act (44 U.S.C. 3507 *et seq.*).

Regulatory Flexibility Act

The Department of the Interior has determined that this rule will not have a significant economic impact on a substantial number of small entities under the Regulatory Flexibility Act (5 U.S.C. 601 *et seq.*). The State submittal which is the subject of this rule is based upon corresponding Federal regulations for which an economic analysis was prepared and certification made that such regulations would not have a significant economic effect upon a substantial number of small entities. Accordingly, this rule will ensure that existing requirements previously promulgated by OSM will be implemented by the State. In making the determination as to whether this rule would have a significant economic impact, the Department relied upon the data and assumptions for the corresponding Federal regulations.

List of Subjects in 30 CFR Part 948

Intergovernmental relations, Surface mining, Underground mining.

Dated: June 28, 1995.

Ronald C. Recker,

Acting Regional Director, Appalachian Regional Coordinating Center.

[FR Doc. 95–16378 Filed 7–3–95; 8:45 am]

BILLING CODE 4310–05–M

ENVIRONMENTAL PROTECTION AGENCY

40 CFR Part 52

[IN41–1–6343b; FRL–5221–7]

Approval and Promulgation of Implementation Plans; Indiana

AGENCY: Environmental Protection Agency (EPA).

ACTION: Proposed rule.

SUMMARY: The United States Environmental Protection Agency (USEPA) proposes to approve Indiana's August 3, 1994, and February 6, 1995, submittal of requested revisions to the Indiana State Implementation (SIP) for ozone which applies Reasonably Available Control Technology to all major sources of volatile organic compounds in moderate and above ozone nonattainment areas, including those sources for which USEPA has not issued a control techniqes guideline (CTG) (i.e., non-CTG sources). In the final rules section of this **Federal Register**, the USEPA is approving this action as a direct final rule without prior proposal because USEPA views this as a noncontroversial action and anticipates no adverse comments. A detailed rationale for the approval is set forth in the direct final rule. If no adverse comments are received in response to that direct final rule, no further activity is contemplated in relation to this proposed rule. If USEPA receives adverse comments, the direct final rule will be withdrawn and all public comments received will be addressed in a subsequent final rule based on the proposed rule. USEPA will not institute a second comment period on this action, unless warranted by significant revisions to this rulemaking based on any comments received in response to this action. Any parties interested in commenting on this notice should do so at this time.

DATES: Comments on this proposed rule must be received on or before August 4, 1995.

ADDRESSES: Written comments should be mailed to: J. Elmer Bortzer, Chief, Regulation Development Section, Regulation Development Branch (AR–18J), U.S. Environmental Protection Agency, Region 5, 77 West Jackson Boulevard, Chicago, Illinois 60604.

Copies of the State submittal and USEPA's analysis of it are available for inspection at: Regulation Development Section, Regulation Development Branch (AR–18J), U.S. Environmental Protection Agency, Region 5, 77 West Jackson Boulevard, Chicago, Illinois 60604.

FOR FURTHER INFORMATION CONTACT: Rosanne Lindsay, Regulation Development Section, Regulation Development Branch (AR–18J), U.S. Environmental Protection Agency, Region 5, 77 West Jackson Boulevard, Chicago, Illinois 60604, (312) 886–6036.

SUPPLEMENTARY INFORMATION: For additional information see the direct final rule published in the rules section of this **Federal Register**.

Dated: May 25, 1995.

Valdas V. Adamkus,

Regional Administrator.

[FR Doc. 95–16360 Filed 7–3–95; 8:45 am]

BILLING CODE 6560–50–P

---

40 CFR Parts 63 and 430

[FRL–5253–8]

RIN 2060–AD03 and 2040–AB53

Effluent Limitations Guidelines, Pretreatment Standards, and New Source Performance Standards: Pulp, Paper, and Paperboard Category; National Emission Standards for Hazardous Air Pollutants for Source Category: Pulp and Paper Production

AGENCY: Environmental Protection Agency (EPA).

ACTION: Notice of data availability.

SUMMARY: On December 17, 1993, EPA proposed standards to reduce the discharge of water pollutants and emissions of hazardous air pollutants from the pulp, paper, and paperboard industry (58 FR 66078). This action announces the availability of additional data and information that EPA will consider for the promulgation of effluent limitations guidelines and standards and air emission standards for this industry.

DATES: Comments are not solicited at this time. They will be solicited at a later date.

ADDRESSES: The data being announced today have been placed in the EPA Water Docket at EPA Headquarters at Waterside Mall, room L102, 401 M Street SW., Washington, DC 20460, telephone (202) 260–3027. The Docket staff requests that interested parties call for an appointment before visiting the Docket. A reasonable fee may be charged for copying.

FOR FURTHER INFORMATION CONTACT: Ms. Debra Nicoll, Engineering and Analysis Division (4303), U.S. Environmental Protection Agency, 401 M Street SW., Washington, DC 20460, telephone number (202)260–5386.

SUPPLEMENTARY INFORMATION:

Overview

On December 17, 1993 (58 FR 66078), EPA proposed standards to reduce the discharge of toxic, conventional, and nonconventional pollutants and emissions of hazardous air pollutants from the pulp, paper, and paperboard industry. On March 17, 1994 (59 FR 12567), EPA published a correction notice to the proposed rules and extended the comment period, which closed on April 17, 1994. In the preamble to the proposed rules, EPA solicited data on various issues and questions related to the proposed effluent standards. The Agency has received new information on some of these topics and has added new information to the Docket. Today's notice announces the availability of new information in the Water Docket for the Pulp, Paper, and Paperboard Point Source Category. Subsequent sections of today's notice summarize the information that has been added to the Water Docket.

The Water Docket also houses the public comments that EPA received on the proposed rulemaking. To assist reviewers in finding the public comments and the materials announced today, a Users Guide for the record is available in the Water Docket. The materials announced today appear in the record starting at Section 18.

EPA is still reviewing the data announced today and therefore does not publish any analyses in this notice. Accordingly, the Agency is not soliciting comment on this notice or the new data at this time. EPA will publish its analyses, including any new regulatory options, if appropriate, in a subsequent notice. At that time, EPA will establish a 30-day comment period to solicit comment on the new information and new analyses. The Agency's intention in making the additional data available in the Docket at this time is to provide the public as much time as possible to review the new information. After making more progress in reviewing the data, the Agency will then request comment on the data and the Agency's findings. EPA received (and welcomed) considerable data after the close of the comment period on April 18, 1994. All comments submitted after that date will be considered as though timely filed and are part of the administrative record. There is no need for commenters to resubmit data or comments already sent to EPA.

The Agency issued a previous notice of data availability on February 22, 1995 (60 FR 9813). In that notice, EPA

announced the availability of new data related to the proposed air emissions standards; that new data is located in Air Docket A–92–40. EPA did not solicit comment on that data in the notice. EPA will seek comment on that information in a subsequent notice.

EPA Sampling Activities

Following the December 1993 Notice of Proposed Rulemaking, EPA conducted a sampling and analysis program to collect additional data characterizing the performance of bleached papergrade kraft and papergrade sulfite mills employing advanced pulping and bleaching technologies.

Wastewater samples from bleached kraft mills were collected at Louisiana-Pacific Corporation (Samoa, California); Crestbrook Forest Industries, Ltd. (Skookumchuck, British Columbia, Canada); Stora Billerud AB—Gruvon Mill (Grums, Sweden); and Enocell Oy (Uimaharju, Finland). The pulping and bleaching technologies evaluated at these kraft mills are: 1) oxygen delignification in conjunction with elemental chlorine-free (ECF) bleaching; 2) ECF bleaching in addition to both oxygen delignification and extended delignification; and 3) totally chlorine-free (TCF) bleaching.

Wastewater samples for both ECF and TCF bleaching at a papergrade sulfite mill were collected at Stracel SA in Strasbourg, France.

The information relating to these sampling activities that has been added to the Docket includes: Pre-sampling site visit reports; Sampling and Analysis Plans; Analytical laboratory reports; Data quality review memoranda; and Correspondence and telephone contact reports.

AF&PA/NCASI Industry Surveys

In response to several of the data solicitations described in the Notice of Proposed Rulemaking, five separate surveys were developed and administered by the National Council of the Paper Industry for Air and Stream Improvement (NCASI) on behalf of the American Forest & Paper Association (AF&PA). Completed surveys were provided to EPA for consideration in developing the final regulations. Each survey is described below. Except as noted, the survey data are now available in the Docket.

a. Data Request for Secondary Fiber Non-Deink Mills. This data request collected information about water use, wastewater treatment, and wastewater recycle and reuse at mills that make products from non-deinked secondary fiber. The survey sought to evaluate the technical feasibility of zero discharge (100% wastewater recycle) as a basis for new source performance standards by identifying characteristics, if any, distinguishing zero discharge mills from mills not currently achieving zero discharge.

NCASI mailed the questionnaires to mills with production comprised of a high percentage (at least 80%) of non-deinked secondary fiber and several other mills that previously claimed they achieve 100% recycle. NCASI forwarded the completed survey forms to EPA. About half of the mills responding claimed the survey data as confidential business information. Survey forms for the remaining mills are available for public review in the Docket.

b. Recovery Furnace Capacity Survey. The survey objective was to compile a detailed inventory of the recovery furnaces operated by the industry. Information requested included furnace capacity data, current operating rates, and a history of the modifications and capacity upgrades which have been made to each recovery furnace. This information was collected to help resolve the disparity between AF&PA and EPA cost estimates for the proposed rule.

NCASI distributed the questionnaires to companies with bleached and unbleached kraft mills and requested information on the recovery furnaces. Survey data for over 100 mills have been provided to EPA. Survey data not claimed as confidential business information have been placed in the public Docket.

c. Best Management Practices Questionnaire. NCASI conducted this survey to collect general information regarding the existing infrastructure (e.g., tanks, curbing) and control systems in place at mills for preventing and controlling pulping liquor leaks and spills. The survey also requested information about the costs associated with implementing spill prevention and control programs. Survey forms were sent to a group of bleached, unbleached and dissolving kraft mills; dissolving and papergrade sulfite mills; semi-chemical mills; and non-wood chemical pulp mills.

d. Capital and Operating Cost Requests. The Capital and Operating Cost Request collected engineering cost information for process technologies forming the basis of the proposed effluent limitations guidelines and standards. NCASI distributed the surveys to several mills that recently (1) installed extended delignification, oxygen delignification, or pressure screens; (2) upgraded brown stock washers; (3) increased chlorine dioxide capacity; or (4) upgraded recovery furnace capacity. The objective was to collect cost information that could be used to modify, if appropriate, cost curves used by EPA to estimate the costs of complying with the proposed regulations or other control options. Information not claimed as confidential business information are available for review in the Docket.

e. Operating Data Requests for Recently Installed Pulping and Bleaching Technologies. This survey was developed to collect information from mills that have made pulping and bleaching process changes in the last three years. These data were collected to update the status of the process technologies in place at the mills to better evaluate industry comments and revise mill-specific compliance cost estimates, if appropriate.

NCASI distributed the questionnaires and provided the results to EPA. Information not claimed as confidential business information is available for review in the Docket.

Other Data Added to the Docket

EPA has collected and received other data since proposal in addition to that described above. EPA and its contractors have visited several mills to further assess controls considered at the time of proposal and to collect information to fully evaluate comments and data submitted by the industry and other interested parties. EPA has met with industry representatives and other interested parties, and has participated in several technical conferences since the proposal.

Many of these activities are documented by materials now included in the Docket. These materials include site visit reports, meeting reports, correspondence with industry and other interested parties, and technical literature.

EPA is also adding to the Docket data and other information characterizing performance, costs, and technical feasibility of regulatory control options. For example, EPA has received and added to the Docket effluent performance data from several mills that use complete chlorine dioxide substitution, which is key to the industry's suggested technology basis for papergrade kraft mills. The industry-suggested alternative was described in the proposal at 58 FR 66078, 66173 (December 17, 1993), but was not fully analyzed at that time due to insufficient data. The Agency is now reviewing the new data and will give serious consideration to the industry's

alternative as a technology basis for setting limitations and standards.

EPA is also adding to the Docket information that describes changes to the computer implementation of the statistical methodology used to develop effluent limitations. The Agency plans to modify the computer implementation that was used for the proposal. While the statistical methodology remains unchanged, the revised computer program provides more reliable results in an interim step used to calculate the limitations. A memorandum describing the change is available in the Docket.

Dated: June 26, 1995.

Robert Perciasepe,

Assistant Administrator for Water.

[FR Doc. 95–16423 Filed 7–5–95; 8:45 am]

BILLING CODE 6560–50–P

---

40 CFR Part 80

[FRL–5255–4)

Announcement of Hearing Regarding Opt-Out of the Reformulated Gasoline Program: Jefferson County, Albany and Buffalo, New York; Twenty-Eight Counties in Pennsylvania; and Hancock and Waldo Counties in Maine, General Procedures for Future Opt-Outs

AGENCY: Environmental Protection Agency (EPA).

ACTION: Notice of hearing.

SUMMARY: EPA is announcing a hearing to take place July 5, 1995, at 11:00 a.m., in Washington, DC The Agency will hold a public hearing on the proposed opt-out of the reformulated gasoline program for designated New York, Pennsylvania, and Maine counties and on the general procedures for future opt-outs.

DATES: The hearing will be conducted on July 5, 1995, from 11:00 a.m. until 5:00 p.m.

ADDRESSES: The hearing will take place at the Hyatt Regency Washington on Capitol Hill, 400 New Jersey Avenue, NW, Washington, DC 20001, in the Ticonderoga Room.

Materials relevant to this notice have been placed in Docket A–94–68. The docket is located at the Air Docket Section, Mail Code 6102, U.S. Environmental Protection Agency, 401 M Street, SW, Washington, DC 20460, in room M–1500 Waterside Mall. Documents may be inspected from 8:00 a.m. to 4:00 p.m. A reasonable fee may be charged for copying docket material.

FOR FURTHER INFORMATION CONTACT: Mr. Mark Coryell, U.S. Environmental Protection Agency Office of Air and Radiation, 401 M Street, SW (6406J), Washington, DC 20460, (202)233–9014.

SUPPLEMENTARY INFORMATION: In a separate action published in the **Federal Register** on June 14, 1995 (60 FR 31269), EPA proposed to remove Jefferson County and the Albany and Buffalo areas in New York; twenty-eight counties in Pennsylvania; and Hancock and Waldo counties in Maine from the list of covered areas identified in section 80.70 of the reformulated gasoline rule. This was based on requests from the Governors of New York, Pennsylvania and Maine that these areas opt out of this federal program. EPA also proposed general rules establishing the criteria and procedures for states to opt-out of the RFG program.

A copy of this notice and other relevant material are available on the OAQPS Technology Transfer Network Bulletin Board System (TTNBBS). The TTNBBS can be accessed with a dial-in phone line and a high-speed modem (PH# 919–541–5742). The parity of your modem should be set to none, the data bits to 8, and the stop bits to 1. Either a 1200, 2400, or 9600 baud modem should be used. When first signing on, the user will be required to answer some basic informational questions for registration purposes. After completing the registration process, proceed through the following series of menus:

(M) OMS
(K) Rulemaking and Reporting
(3) Fuels
(9) Reformulated gasoline

A list of ZIP files will be shown, all of which are related to the reformulated gasoline rulemaking process. Today's notice will be in the form of a ZIP file and can be identified by the following title: OPTOHEAR.ZIP. The June 14, 1995, proposal for opt-out of specific New York, Pennsylvania, and Maine RFG areas and the proposed general opt-out criteria is identified by the following title: OPTONPRM.ZIP. To download these files, type the instructions below and transfer according to the appropriate software on your computer:

<D>ownload, <P>rotocol, <E>xamine, <N>ew, <L>ist, or <H>elp Selection or <CR> to exit: D filename.zip

You will be given a list of transfer protocols from which you must choose one that matches with the terminal software on your own computer. The software should then be opened and directed to receive the file using the same protocol. Programs and instructions for de-archiving compressed files can be found via <S>ystems Utilities from the top menu, under <A>rchivers/de-archivers. Please note that due to differences between the software used to develop the document and the software into which the document may be downloaded, changes in format, page length, etc. may occur.

List of Subjects in 40 CFR Part 80

Environmental protection, Air pollution control, Fuel additives, Gasoline, and Motor vehicle pollution.

Dated: June 29, 1995.

Mary D. Nichols,

Assistant Administrator Office of Air and Radiation.

[FR Doc. 95–16606 Filed 6–30–95; 3:00 pm]

BILLING CODE 6560–50–M

---

40 CFR Part 140

[FRL–5254–2]

RIN 2040–AC51

Marine Sanitation Devices; Proposed Regulation to Establish Drinking Water Intake Zones in Two Sections of the Hudson River, New York State

AGENCY: Environmental Protection Agency (EPA).

ACTION: Proposed rule.

SUMMARY: The Environmental Protection Agency is proposing to establish two Drinking Water Intake Zones in two portions of the Hudson River, in response to an application received by the New York State Department of Environmental Conservation (NYSDEC). Establishment of a Drinking Water Intake Zone serves to completely *prohibit the discharge of vessel sewage,* treated or untreated, to waters contained in that zone. Proposed Zone 1 is bounded by the Mohawk River on the south and Lock 2 on the north. It is approximately 8 miles long. Zone 2 is bounded on the south by the Village of Roseton on the western shore and bounded on the north by the southern end of Houghtaling Island. Zone 2 is approximately 60 miles long.

DATES: Comments on this proposed rule must be submitted to EPA on or before September 5, 1995. Public Hearings regarding this proposed rule will be held in New Paltz, New York on August 9, 1995 and in Waterford, New York on August 10, 1995. Comments may be submitted orally or in writing at either of these Public Hearings.

ADDRESSES: Written comments or requests for information may also be submitted to Patrick M. Durack, Chief, Water Permits and Compliance Branch (25th Floor), U.S. Environmental

Protection Agency Region 2, 290 Broadway, New York, New York, 10007–1866.

Public Hearings are scheduled at the following locations:

1. On August 9, 1995 at the offices of the New York State Department of Environmental Conservation at 21 South Putt Corners Road, New Paltz, NY from 6:30 p.m. to 8:30 p.m.

2. On August 10, 1995 at the Town of Waterford Civic Center, 35 Third Street, Waterford, NY from 6:30 p.m. to 8:30 p.m.

FOR FURTHER INFORMATION CONTACT: Philip Sweeney, 212–637–3765.

SUPPLEMENTARY INFORMATION:

I. Background

In July 1992 the New York State Department of Environmental Conservation (NYSDEC) submitted an application for two reaches of the Hudson River to be designated by EPA as Drinking Water Intake Zones. Section 312(f)(4)(B) of Public Law 92–500, as amended by Public Law 95–217 and Public Law 100–4, (the ''Clean Water Act''), states, ''Upon application by a State, the Administrator shall, by regulation, establish a drinking water intake zone in any waters within such State and prohibit the discharge of sewage from vessels within that zone.'' Region II requested that authority for taking action in response to this application be delegated from the Administrator to the Regional Administrator. That authority was delegated on November 16, 1992.

Proposed Zone 1 is in the Hudson River/Champlain Canal and is bounded by the Mohawk River on the south and Lock 2 on the north. It is approximately 8 miles long. This zone is classified in the Official Compilation of Codes, Rules and Regulations of the State of New York (6 NYCRR) Part 941.6, Item Number 1, as one Class A segment. This classification was assigned in February 1967. Class A is the standard given to waters of New York for the protection of a source of water supply for drinking, culinary, or food processing purposes. There is one drinking water intake located in Zone 1, authorized for 2.0 million gallons per day, which serves the Town and Village of Waterford, Saratoga County, New York. This portion of the Hudson River adjoins Saratoga County on the west and Rensselaer County on the east.

Zone 2 is also in the Hudson River and is bounded on the south by the Village of Roseton on the western shore and on the north by the southern end of Houghtaling Island. This zone is classified in 6 NYCRR as two segments, both Class A. The northern segment, which stretches from the southern end of Houghtaling Island (at light #72) to the southern end of Esopus Island (at light #28), was classified as Class B in 1966 and reclassified by the State of New York as Class A in 1969. The southern segment of Zone 2 stretches from the southern end of Esopus Island (at light #28) to the line formed by Roseton on the west shore and Low Point on the east shore in the general area of Chelsea, New York. This southern segment of Zone 2 was classified on October 15, 1966 as Class A. There are six authorized drinking water intakes in Zone 2. They are listed below:

Community served	Authorized taking in million gallons per day
Rhinebeck Village and Hamlet of Rhinecliff	1.0
Hyde Park Fire and Water District, Town of Hyde Park	6.0
City and Town of Poughkeepsie	16.0
New York City, Chelsea Emergency Pump Station	100.0
Port Ewan Water District, Town of Esopus	1.0
Highland Water District	3.0

Authority to enforce the prohibition of vessel sewage discharges lies with the U.S. Coast Guard, which may by agreement utilize enforcement officers of the U.S. Environmental Protection Agency, other Federal agencies, or States, in accordance with § 312(k) of the Clean Water Act. Both the Federal and New York State governments will take a role in implementation and enforcement of the proposed prohibition in the two drinking water intake zones. The prohibition will take effect sixty (60) days after notice of the final regulation. This regulation will be issued after consideration of all public comments received as a result of this notice. At the time of final rulemaking, EPA will publish a notice on the implementation plan for this prohibition. A major focus of the implementation plan for this prohibition will be public education, specifically boater education. For the purposes of boater understanding and compliance, it is worthwhile to note landmarks which approximate the boundaries of the drinking water intake zones, which are in view of the Hudson River boater. For Zone 1, the Mohawk River and Lock #2 are visible landmarks. For Zone 2, the northern border is at the southern end of Houghtaling Island. The Newburgh-Beacon Bridge, which is south of the southern zone border, is an obvious landmark for the southern end of Zone 2. All of Zone 2 lies between Houghtaling Island and the Newburgh-Beacon Bridge, and these landmarks are therefore useful markers for boaters.

II. Compliance with Other Acts and Orders

A. Executive Order 12866

Under Executive Order 12866 (58 FR 51735, October 4, 1993), the Agency must determine whether the regulatory action is significant and therefore subject to Office of Management and Budget (OMB) review and the requirements of the Executive Order. The Order defines ''significant regulatory action'' as one that is likely to result in a rule that may:

(1) Have an annual effect on the economy of $100 million or more or adversely affect in a material way the economy, a sector of the economy, productivity, competition, jobs, the environment, public health or safety, or state, local, or tribal governments or communities;

(2) Create a serious inconsistency or otherwise interfere with an action taken or planned by another agency;

(3) materially alter the budgetary impact or entitlement, grants, user fees, or loan programs or the rights and obligations of recipients thereof; or

(4) Raise novel legal or policy issues arising out of legal mandates, the President's priorities, or the principles set forth in the Executive Order.

It has been determined that this rule is not a ''significant regulatory action'' under the terms of Executive Order 12866 and is therefore not subject to OMB review.

B. Regulatory Flexibility Act

Pursuant to the Regulatory Flexibility Act of 1980, 5 U.S.C. 6501 *et seq.*, whenever an agency is developing regulations, it must prepare and make available for public comment the impact of the regulations on small entities (i.e., small businesses, small organizations, and small governmental jurisdictions). A regulatory flexibility analysis is not required if the head of the agency certifies that the rule will not have significant economic effect on a substantial number of small entities. EPA policy dictates that an Initial Regulatory Flexibility Analysis (IRFA) be prepared if the proposed action will have *any* effect on any small entity. An abbreviated IRFA can be prepared depending on the severity of the economic impact and the relevant statute's allowance of alternatives.

The Agency has prepared an IRFA for this proposed rule. In summary, the

IRFA describes that a prohibition of vessel sewage discharge in these two zones will apply to any commercial or recreational vessel with on-board toilet facilities that navigates the Hudson River in the described areas. Only commercial vessels are considered small entities with respect to the Regulatory Flexibility Act. All vessels are already subject to the EPA Marine Sanitation Device Standards at 40 CFR Part 140 and the U.S. Coast Guard Marine Sanitation Device Standards at 33 CFR Part 159. These standards prohibit the overboard discharge of vessel sewage in any freshwater lakes, freshwater reservoirs, or other freshwater impoundments whose inlet or outlet is such as to prevent the ingress or egress by vessel traffic subject to this regulation, or in rivers not capable of being navigated, (40 CFR 140.3). In other waters, including the Hudson River, vessels with on-board toilets shall have U.S. Coast Guard certified marine sanitation devices which either retain sewage or treat sewage to the applicable standards. There are three types of marine sanitation devices certified by the U.S. Coast Guard. Type I and Type II devices are both flow-through devices that treat sewage through maceration and disinfection. Type III devices are holding tanks. Vessel sewage is held in tanks until it can be properly disposed of at a pump-out facility, or it may be discharged untreated outside of U.S. territorial waters. Most Type III devices are equipped with a discharge option, in the form of a Y-valve, which allows the boater to discharge the sewage directly overboard, which is legal only outside of U.S. territorial waters. Since the Hudson River is a U.S. territorial water, the discharge of untreated vessel sewage is prohibited under the existing regulations. Today's proposal, therefore, will not change the legal requirements for boats with Type III devices. Consequently, the only small entities affected by this proposed rule will be commercial boats with on-board toilets with a Type I or II marine sanitation device which use these approximately 68 miles of the Hudson River. The proposal will affect these vessels by requiring retention and pump-out of their treated sewage, or discharge outside of the designated zones. This proposal requires no reporting or recordkeeping activity on the part of small entities. Because of the nominal cost associated with purchase of portable Type III devices and use of pump-out facilities, and the option to discharge sewage treated in accordance with Federal standards outside of the zones, this proposed rule imposes no significant economic impact on a substantial number of small entities.

As mentioned above, NYSDEC submitted the application for these proposed Drinking Water Intake Zones under Section 312(f)(4)(B) of the Clean Water Act—the section that sets national standards for discharges of vessel sewage and prohibits the states or political subdivision thereof from adopting or enforcing any other regulation or standard for vessel sewage discharges. There are several exceptions to this prohibition. Section 312(f)(4)(B) is one of these exceptions. This section was added to the Clean Water Act in 1977 in order to provide the states with an opportunity to have a more stringent standard (i.e., a prohibition) for drinking water intake areas. The Act states, ''Upon application by a State, the Administrator shall, by regulation, establish a drinking water intake zone in any waters within such State and prohibit the discharge of sewage from vessels within that zone.'' EPA interprets this statement to limit its discretion in establishing drinking water intake zones once a state has submitted an application. The statute in this case precludes the Agency from considering other regulatory options, thus limiting EPA's flexibility in implementing this portion of the Act.

C. Paperwork Reduction Act

The Paperwork Reduction Act, 44 U.S.C. 3501 *et seq.*, is intended to minimize the reporting and recordkeeping burden on the regulated community, as well as minimize the cost of Federal information collection and dissemination. In general, the Act requires that information requests and recordkeeping requirements affecting 10 or more non-Federal respondents be approved by the Office of Management and Budget. Since today's rule would not establish or modify any information and recordkeeping requirements, it is not subject to the requirements of the Paperwork Reduction Act.

D. Unfunded Mandates Reform Act of 1995

Under Section 202 of the Unfunded Mandates Reform Act of 1995 (the Act), P.L. 104–4, which was signed into law on March 22, 1995, EPA generally must prepare a written statement for rules with Federal mandates that may result in estimated costs to State, local, and tribal governments in the aggregate, or to the private sector, of $100 million or more in any one year. When such a statement is required for EPA rules, under Section 205 of the Act EPA must identify and consider alternatives, including the least costly, most cost-effective or least burdensome alternative that achieves the objectives of the rule. EPA must select that alternative, unless the Administrator explains in the final rule why it was not selected or it is inconsistent with law. Before EPA establishes regulatory requirements that may significantly or uniquely affect small governments, including tribal governments, it must develop under Section 203 of the Act a small government agency plan. The plan must provide for notifying potentially affected small governments, giving them meaningful and timely input in the development of EPA regulatory proposals with significant Federal intergovernmental mandates, and informing, educating, and advising them on compliance with the regulatory requirements.

EPA has determined that this rule does not include a Federal mandate that may result in estimated annualized costs of $100 million or more to either State, local, and tribal governments in the aggregate, or to the private sector. All vessels that are equipped with marine sanitation devices and that navigate the Hudson River are already subject to the EPA Marine Sanitation Device Standards at 40 CFR Part 140 and the U.S. Coast Guard Marine Sanitation Device Standards at 33 CFR Part 159. These standards prohibit the overboard discharge of untreated vessel sewage in the Hudson River and require that vessels with on-board toilets shall have U.S. Coast Guard certified marine sanitation devices which either retain sewage or treat sewage to the applicable standards. There are three types of marine sanitation devices certified by the U.S. Coast Guard. Only those vessels that have either one of the two types of certified flow-through devices will be affected by this proposed rule. Those vessels affected by this rule will either retain and pump out treated sewage or discharge outside of the designated zones. Any costs associated with those activities will be minimal and it is therefore estimated that the annualized costs to State, local and tribal governments in the aggregate, or to the private sector, will not be or exceed $100 million. Thus, today's rule is not subject to the requirements of Section 202 and 205 of the Act. Because the rule contains no regulatory requirements that might significantly or uniquely affect small governments, it also is not subject to the requirements of Section 203 of the Act. Small governments are subject to the same requirements as other entities whose duties result from this rule and they have the same ability as other entities to retain and pump out treated

sewage or discharge outside of the designated zones.

List of Subjects in 40 CFR Part 140

Environmental protection; Sewage disposal, Vessels.

Dated: June 21, 1995.

William J. Muszynski,

Acting Regional Administrator.

For the reasons set out in the preamble, 40 CFR part 140 is proposed to be amended as follows:

PART 140—[AMENDED]

1. The authority citation for part 140 continues to read as follows:

Authority: Sec. 312, as added Oct. 18, 1972, Pub. L. 92–500, sec. 2, 86 Stat. 871. Interpret or apply sec. 312(b)(1), 33 U.S.C. 1322(b)(1).

2. In § 140.4 paragraph (b)(1) is amended by designating the undesignated text after the colon as paragraph (b)(1)(i) and by adding paragraph (b)(1)(ii) to read as follows:

§ 140.4 Complete prohibition.

* * * * *

(b)***

(1)***

(ii) Two portions of the Hudson River in New York State, the first of which is bounded by the Mohawk River on the south and Lock 2 on the north, as described in item 1 of 6 New York Code of Rules and Regulations (NYCRR) Part 941.6, and the second of which is bounded on the north by the southern end of Houghtaling Island and on the south by a line between the Village of Roseton on the western shore and Low Point on the eastern shore, as described in Items 2 and 3 of 6 NYCRR Part 858.4.

[FR Doc. 95–16418 Filed 7–3–95; 8:45 am]

BILLING CODE 6560–50–P

---

40 CFR Part 180

[PP 5E4425/P619; FRL–4962–5]

RIN 2070–AC18

Imidacloprid; Pesticide Tolerance

AGENCY: Environmental Protection Agency (EPA).

ACTION: Proposed rule.

SUMMARY: EPA proposes to establish a tolerance for residues of the insecticide (1-[6-chloro-3-pyridinyl)methyl]-*N*-nitro-2-imidazolidinimine (referred to in this document as imidacloprid) and its metabolites in or on the raw agricultural commodity dried hops. The Interregional Research Project No. 4 (IR-4) requested pursuant to the Federal Food, Drug and Cosmetic Act (FFDCA) the proposed regulation to establish a maximum permissible level for residues of the insecticide.

DATES: Comments identified by the document control number, [PP 5E4425/P619], must be received on or before August 4, 1995..

ADDRESSES: By mail, submit written comments to: Public Response and Program Resources Branch, Field Operations Division (7506C), Office of Pesticide Programs, Environmental Protection Agency, 401 M St., SW., Washington, DC 20460. In person, bring comments to: Rm. 1132, CM #2, 1921 Jefferson Davis Highway, Arlington, VA 22202. Information submitted as a comment concerning this document may be claimed confidential by marking any part or all of that information as ''Confidential Business Information''. CBI should not be submitted through e-mail. Information marked as CBI will not be disclosed except in accordance with procedures set forth in 40 CFR part 2. A copy of the comment that does not contain CBI must be submitted for inclusion in the public record. Information not marked confidential may be disclosed publicly by EPA without prior notice. All written comments will be available for public inspection in Rm. 1132 at the address given above, from 8 a.m. to 4:30 p.m., Monday through Friday, excluding legal holidays.

Comments and data may also be submitted electronically by sending electronic mail (e-mail) to: opp-docket@epamail.epa.gov. Electronic comments must be submitted as an ASCII file avoiding the use of special characters and any form of encryption. Comments and data will also be accepted on disks in WordPerfect 5.1 file format or ASCII file format. All comments and data in electronic form must be identified by the docket number [PP 5E4425/P619]. Electronic comments on this proposed rule may be filed online at many Federal Depository Libraries. Additional information on electronic submissions can be found in the ''SUPPLEMENTARY INFORMATION'' section of this document.

FOR FURTHER INFORMATION CONTACT: By mail: Hoyt L. Jamerson, Registration Division (7505W), Office of Pesticide Programs, Environmental Protection Agency, 401 M St. SW., Washington, DC 20460. Office location and telephone number: Sixth Floor, Crystal Station #1, 2800 Jefferson Davis Highway, Arlington, VA 22202, (703)-308-8783; e-mail: jamerson.hoyt@epamail.epa.gov.

SUPPLEMENTARY INFORMATION: The Interregional Research Project No. 4 (IR-4), New Jersey Agricultural Experiment Station, P.O. Box 231, Rutgers University, New Brunswick, NJ 08903, has submitted pesticide petition (PP) 5E4425 to EPA on behalf of the Agricultural Experiment Stations of Oregon and Washington. This petition requests that the Administrator, pursuant to section 408(e) of the Federal Food, Drug, and Cosmetic Act (FFDCA), 21 U.S.C. 346a(e), amend 40 CFR 180.472 by establishing a tolerance for residues of the insecticide imidacloprid (1-[(6-chloro-3-pyridinyl)methyl]-*N*-nitro-2-imidazolidinimine) and its metabolites containing the 6-chloropyridinyl moiety, all expressed as 1-[(6-chloro-3-pyridinyl)-methyl]-*N*-nitro-2-imidazolidinimine, in or on the raw agricultural commodity dried hops at 6 parts per million (ppm).

In the **Federal Register** of June 28, 1994 (59 FR 33204), EPA established a time-limited tolerance for residues of imidacloprid on dried hops at 3.0 ppm. The imidacloprid tolerance for dried hops was established to expire on June 28, 1995, to allow IR-4 sufficient time to conduct additional residue field trials in support of a permanent tolerance for this use. Subsequently, IR-4 submitted the data from the residue field trials and petition 5E4425 in support of a permanent tolerance, but EPA extended the time-limited tolerance to expire on June 28, 1996 (60 FR 24784, May 10, 1995), when it became apparent that the IR-4 proposed tolerance could not be established prior to the June 28, 1995 expiration date. The IR-4 residue data have been reviewed and determined to be adequate to support a permanent tolerance for imidacloprid on dried hops at 6 ppm.

The toxicological data considered in support of the proposed tolerance include:

1. A 1-year chronic feeding study in dogs fed diets containing 0, 200, 500, or 1,250/2,500 ppm (average intake was 0, 6.1, 15, or 41/72 milligrams (mg)/kilogram (kg)/day) with a noobserved-effect level of 1,250 ppm based on increased plasma cholesterol and liver cytochrome P-450 levels in dogs at the 2,500-ppm dose level. The high dose was increased to 2,500 ppm (72 mg/kg/day) from week 17 onward due to lack of toxicity at the 1,250-dose level.

2. A 2-year feeding/carcinogenicity study in rats fed diets containing 0, 100, 300, 900, or 1,800 ppm with a NOEL for chronic effects at 100 ppm (5.7 mg/kg/day in males, 7.6 mg/kg/day in females) that included decreased body weight gain in females at 300 ppm (24.9 mg/kg/day) and above; and increased thyroid

lesions in males at 300 ppm (16.9 mg/kg/day) and above, and in females at 900 ppm (73 mg/kg/day) and above. There were no apparent carcinogenic effects under the conditions of the study.

3. A 2-year carcinogenicity study in mice fed diets containing 0, 100, 330, 1,000, or 2,000 ppm with a NOEL of 1,000 ppm (208 mg/kg/day in males, 274 mg/kg/day in females) based on decreased food consumption and decreased water intake at the 2,000-ppm dose level. There were no apparent carcinogenic effects observed under the conditions of this study.

4. A three-generation reproduction study with rats feed diets containing 0, 100, 250, or 700 ppm with a reproductive no-observed-effect level (NOEL) of 100 ppm (equivalent to 8 mg/kg/day based on decreased pup body weight observed at the 250-ppm dose level.

5. A developmental toxicity study in rat given gavage doses at 0, 10, 30, or 100 mg/kg/day during gestation days 6 to 16 with a NOEL for developmental toxicity at 30 mg/kg/day based on increased wavy ribs observed at the 100 mg/kg/day dose level.

6. A developmental toxicity study in rabbits given gavage doses at 0, 8, 24, or 72 mg/kg/day during gestation days 6 through 19 with a NOEL for developmental toxicity at 24 mg/kg/day based on decreased body weight and increased skeletal abnormalities observed at the 72 mg/kg/day dose level.

7. Imidacloprid, which was tested in a battery of 23 mutagenic assays, was negative for mutagenic effects in all but two of the assays. Imidacloprid tested positive for chromosome aberrations in an *in vitro* cytogenetic study with human lymphocytes for the detection of induced clastogenic effects, and for genotoxicity in an *in vitro* cytogenetic assay measuring sister chromatid exchange in Chinese hamster ovary cells.

Dietary risk assessments for imidacloprid indicate that there is minimal risk from established tolerances and the proposed tolerance for dried hops. A cancer risk assessment is not appropriate for imidacloprid since the pesticide is assigned to ''Group E'' (evidence of noncarcinogenicity for humans) of EPA's cancer classification system. Dietary risk assessments for the pesticide were conducted using the Reference Dose (RfD) to assess chronic exposure and risk and the Margin of Exposure (MOE) for acute toxicity.

The RfD is calculated at 0.057 mg/kg/ of body weight/day based on a NOEL of 5.7 mg/kg/day from the 2-year rat feeding/carcinogenicity study and 100-fold uncertainty factor. The theoretical maximum residue contribution (TMRC) from existing tolerances and the proposed tolerance for dried hops utilizes less than 5 percent of the RfD for the general population and 26 percent of the RfD for nonnursing infants less than one year in age.

The MOE is a measure of how closely the high end acute dietary exposure comes to the no-observed-effect level from the toxicity endpoint of concern. For imidacloprid the MOE was calculated as a ratio of the NOEL (24 mg/kg/day) from the rabbit developmental toxicity study to dietary exposure, as estimated for the population subgroup at greatest risk (females of childbearing age). The MOE for this subgroup is estimated at 2500 for high-end exposure. Acute dietary margins of exposure of less than 100 are generally of concern to EPA. A MOE of 2,500 poses minimal risk.

Established tolerances for meat, milk, poultry, and eggs are adequate to cover secondary residues resulting from the feeding of spent hops to livestock.

The metabolism of imidacloprid in plants and animals is adequately understood. An adequate analytical method is available for enforcement purposes. The enforcement method has been submitted to the Food and Drug Administration for publication in the Pesticide Analytical Manual, Volume II (PAM II). Because of the long lead time for publication of the method in PAM II, the analytical method is being made available in the interim to any one interest in pesticide enforcement when requested from: Calvin Furlow, Public Response and Program Resources Branch, Field Operations Divisions (7506C), Office of Pesticide Programs, Environmental Protection Agency, 401 M St., SW., Washington, DC 20460. Office location and telephone number: Rm. 1130A, CM #2, 1921 Jefferson Davis Hwy., Arlington, VA 22202, (703)-305-5937.

There are currently no actions pending against the continued registration of this chemical.

Based on the information and data considered, the Agency has determined that the tolerance established by amending 40 CFR part 180 would protect the public health. Therefore, it is proposed that the tolerance be established as set forth below.

Any person who has registered or submitted an application for registration of a pesticide, under the Federal Insecticide, Fungicide, and Rodenticide Act (FIFRA) as amended, which contains any of the ingredients listed herein, may request within 30 days after publication of this notice in the Federal Register that this rulemaking proposal be referred to an Advisory Committee in accordance with section 408(e) of the FFDCA.

A record has been established for this rulemaking under docket number [PP 5E4425/P619] (including comments and data submitted electronically as described below). A public version of this record, including printed, paper versions of electronic comments, which does not include any information claimed as CBI, is available for inspection from 8 a.m. to 4 p.m., Monday through Friday, excluding legal holidays. The public record is located in Rm. 1132 of the Public Response and Program Resources Branch, Field Operations Division (7506C), Office of Pesticide Programs, Environmental Protection Agency, Crystal Mall #2, 1921 Jefferson Davis Highway, Arlington, VA.

Electronic comments can be sent directly to EPA at:

opp-Docket@epamail.epa.gov

Electronic comments must be submitted as an ASCII file avoiding the use of special characters and any form of encryption.

The official record for this rulemaking, as well as the public version, as described above will be kept in paper form. Accordingly, EPA will transfer all comments received electronically into printed, paper form as they are received and will place the paper copies in the official rulemaking record which will also include all comments submitted directly in writing. The official rulemaking record is the paper record maintained at the address in ''ADDRESSES'' at the beginning of this document.

Under Executive Order 12866 (58 FR 51735, Oct. 4, 1993), the Agency must determine whether the regulatory action is ''significant'' and therefore subject to all the requirements of the Executive Order (i.e., Regulatory Impact Analysis, review by the Office of Management and Budget (OMB)). Under section 3(f), the order defines ''significant'' as those actions likely to lead to a rule (1) having an annual effect on the economy of $100 million or more, or adversely and materially affecting a sector of the economy, productivity, competition, jobs, the environment, public health or safety, or State, local or tribal governments or communities (also known as ''economically significant''); (2) creating serious inconsistency or otherwise interfering with an action taken or planned by another agency; (3) materially altering the budgetary impacts of entitlement, grants, user fees, or loan programs; or (4) raising novel legal or policy issues arising out of legal

mandates, the President's priorities, or the principles set forth in this Executive Order.

Pursuant to the terms of this Executive Order, EPA has determined that this rule is not ''significant'' and is therefore not subject to OMB review.

Pursuant to the requirements of the Regulatory Flexibility Act (Pub. L. 96-354, 94 Stat. 1164, 5 U.S.C. 601-612), the Administrator has determined that regulations establishing new tolerances or raising tolerance levels or establishing exemptions from tolerance requirements do not have a significant economic impact on a substantial number of small entities. A certification statement to this effect was published in the **Federal Register** of May 4, 1981 (46 FR 24950).

List of Subjects in 40 CFR Part 180

Environmental protection, Administrative practice and procedure, Agricultural commodities, Pesticides and pests, Reporting and recordkeeping requirements.

Dated: June 23, 1995.

Peter Caulkins,

Acting Director, Registration Division, Office of Pesticide Programs.

Therefore, it is proposed that 40 CFR part 180 be amended as follows:

PART 180—[AMENDED]

1. The authority citation for part 180 continues to read as follows:

Authority: 21 U.S.C. 346a and 371.

2. In § 180.472, paragraph (a) is amended in the table therein by adding and alphabetically inserting dried hops, and paragraph (d) is removed, as follows:

§ 180.472 1-[(6-Chloro-3-pyridinyl)methyl]-N-nitro-2-imidazolidinimine; tolerances for residues.

(a) * * *

Commodity	Parts per million
* * * * *	
Hops, dried	6
* * * * *	

* * * * *

[FR Doc. 95–16429 Filed 7–3–95; 8:45 am]

BILLING CODE 6560–50–F

40 CFR Part 180

[PP 4E4374/P617; FRL–4961–9]

Rin 2070–AC18

Dimethoate; Pesticide Tolerance

AGENCY: Environmental Protection Agency (EPA).

ACTION: Proposed rule.

SUMMARY: This document proposes that a tolerance be established for residues of the insecticide dimethoate in or on the raw agricultural commodity asparagus. The Interregional Research Project No. 4 (IR-4) requested this proposed regulation to establish a maximum permissible level for residues of the insecticide in or on the commodity in a petition submitted pursuant to the Federal Food, Drug and Cosmetic Act (FFDCA).

DATE: Comments, identified by the document control number [PP 4E4374/P617], must be received on or before August 4, 1995.

ADDRESSES: By mail, submit written comments to EPA's Office of Pesticide Programs (OPP) at: Public Response and Program Resources Branch, Field Operations Division (7506C), Office of Pesticide Programs, Environmental Protection Agency, 401 M St., SW., Washington, DC 20460. In person, bring comments to: Rm. 1132, CM #2, 1921 Jefferson Davis Hwy., Arlington, VA 22202. Information submitted as a comment concerning this document may be claimed confidential by marking any part or all of that information as ''Confidential Business Information.'' CBI should not be submitted through e-mail. Information marked as CBI will not be disclosed except in accordance with procedures set forth in 40 CFR Part 2. A copy of the comment that does not contain CBI must be submitted for inclusion in the public record. Information not marked confidential may be disclosed publicly by EPA without prior notice. All written comments will be available for public inspection in Rm. 1132 at the address given above, from 8 a.m. to 4:30 p.m., Monday through Friday, excluding legal holidays.

Comments and data may also be submitted electronically by sending electronic mail (e-mail) to: opp-docket@epamail.epa.gov. Electronic comments must be submitted as an ASCII file avoiding the use of special characters and any form of encryption. Comments and data will also be accepted on disks in WordPerfect in 5.1 file format or ASCII file format. All comments and data in electronic form must be identified by the docket number [PP 4E4374/P617]. No Confidential Business Information (CBI) should be submitted through e-mail. Electronic comments on this proposed rule may be filed online at many Federal Depository Libraries. Additional information on electronic submissions can be found below in this document.

FOR FURTHER INFORMATION CONTACT: By mail: Hoyt L. Jamerson, Emergency Response and Minor Use Section (7505W), Registration Division, Environmental Protection Agency, 401 M St., SW., Washington, DC 20460. Office location and telephone number: Sixth Floor, Crystal Station #1, 2800 Jefferson Davis Highway, Arlington, VA 22202, (703)-308-8783; e-mail: Jamerson.Hoyt@epamail.epa.gov.

SUPPLEMENTARY INFORMATION: The Interregional Research Project No. 4 (IR-4), New Jersey Agricultural Experiment Station, P.O. Box 231, Rutgers University, New Brunswick, NJ 08903, has submitted pesticide petition 4E4374 to EPA on behalf of the Agricultural Experiment Stations of North Carolina and Oklahoma. The petition requested that the Administrator, pursuant to section 408(e) of the Federal Food, Drug, and Cosmetic Act (21 U.S.C. 346a(e)), amend 40 CFR 180.204 to establish a tolerance for residues of the pesticide dimethoate (*O,O*-dimethyl *S*-(*N*-methylcarbamoylmethyl) phosphorodithioate) including its oxygen analog (*O,O*-dimethyl *S*-(*N*-methylcarbamoylmethyl) phosphorothioate) in or on the raw agricultural commodity asparagus at 0.15 part per million (ppm). The petitioner proposed that use of dimethoate on asparagus be geographically limited to exclude California and Arizona based on the geographical representation of the residue data submitted. Additional residue data will be required to expand the area of usage. Persons seeking geographically broader registration should contact the Agency's Registration Division at the address provided above.

The data submitted in the petition and other relevant material have been evaluated. The toxicological data considered in support of the proposed tolerance include:

1. A 3-month feeding study in rats fed diets containing 0, 2, 8, 32, 50, and 400 ppm with a no-observed-effect level (NOEL) for plasma, red blood cell and brain cholinesterase inhibition of 32 ppm (equivalent to 1.6 milligrams (mg)/kilogram (kg) kg/day) and a systemic NOEL of 50 ppm (equivalent to 2.5 mg/kg/day) based on depressed growth and

food consumption, and increased kidney and liver weight ratios at the 400-ppm dose level.

2. A 3-month feeding study in dogs fed diets containing 0, 2, 10, 50, and 1,500 ppm with a NOEL for red blood cell cholinesterase inhibition of 2 ppm (equivalent to 0.05 mg/kg/day) and a NOEL for systemic effects of 50 ppm (equivalent to 1.25 mg/kg/day) based on tremors and decreased food consumption in females at the 1,500-ppm dose level.

3. A 1-year feeding study in dogs fed diets containing 0, 5, 20, or 125 ppm with a NOEL for cholinesterase inhibition of less than 5 ppm (equivalent to less than 0.18 mg/kg/day) based on decreased brain and red blood cell cholinesterase at the 5-ppm dose level and a systemic NOEL of less than 5 ppm based on decreased liver weight in females at the 5-ppm dose level.

4. A two-generation reproduction study in rats fed diets containing 0, 1, 15, or 65 ppm (equivalent to 0/0, 0.08/0.09, 1.2/1.3, or 5.46/6.04 mg/kg/day for males/females) with a tentative reproductive NOEL of 15 ppm based on decreased fertility in the F1b and F2a, and F2b matings: decreased pup weight during the lactation period for both sexes and generations and decreased live births in the F2b litters.

5. A developmental toxicity study in rats given gavage doses of 0, 3, 6, or 18 mg/kg/day with no developmental toxicity observed under the conditions of the study. The NOEL for maternal toxicity was established at 6 mg/kg/day; rats fed 18 mg/kg/day (lowest-effect level) displayed hypersensitivity, tremors, and unsteady gait.

6. A developmental toxicity study in rabbits given gavage doses of 0, 10, 20, or 40 mg/kg/day from day 7 to day 19 of gestation with a developmental NOEL of 20 mg/kg/day based on significant reduction in fetal weight at the 40- mg/kg/day dose level. The maternal NOEL was established at 10 mg/kg/day based on body weigth decrement at 20 mg/kg/day dose level.

7. A 2-year chronic feeding/carcinogenicity study in rats fed diets containing 0, 5, 25, or 100 ppm (equivalent to 0, 0.25, 1.25, or 5.0 mg/kg/day) with a systemic NOEL of 25 ppm based on increased female mortality, decreased male body weight gain, anemia in males and increased leukocytes in male and female rats at the 100-ppm dose level. The NOEL for cholinesterase inhibition was established at 5 ppm based on cholinesterase inhibition at the 25-ppm dose level. In male rats, there were dose-related trends for (1) spleen hemangiosarcomas (malignant tumors associated with connective tissue, and blood and lymph vessels); (2) combined spleen hemangioma (benign tumors) and hemangiosarcoma; and (3) combined spleen hemangioma and hemangiosarcoma, and skin hemangiosarcoma. Furthermore, there were significant pair-wise comparisons between control and the high dose (100 ppm) for spleen (hemangioma/hemangiosarcoma) and in the combined tumors of spleen and skin hemangioma/hemangiosarcoma and lymph angioma/angiosarcoma (benign and malignant tumors made up of lymph vessels). There was also a significant difference by pair-wise comparison between the control and low dose (5 ppm) for (1) lymph angiosarcoma, (2) combined lymph angioma and angiosarcoma, and (3) combined spleen and skin hemangioma/hemangiosarcoma and lymph angioma/angiosarcoma. There were no significant tumor increases in female rats.

8. A 78-week carcinogenicity study in B6C3F1 mice fed diets containing 0, 25, 100, or 200 ppm (equivalent to 0, 3.75, 15, or 30 mg/kg/day). In male mice there were significant dose-related increased trends for (1) combined lung adenoma and/or adenocarcinoma, (2) for lymphoma, and (3) for the combined group of lymphoma, reticularsarcoma, and leukemia. In female mice there were significant dose-related trends for (1) liver carcinoma and for (2) combined liver adenoma and/or carcinoma.

9. Dimethoate is regarded as a mutagenic compound based on the results of studies designed to determine gene mutation and structural chromosome aberrations. Dimethoate is a bacterial mutagen and shows equivocal results for gene mutations in mammalian cells. It produces clastogenic effects in several studies in vitro and in vivo, and there are suggestive results for dominant lethal effects. The National Toxicology Program has concluded that dimethoate is a mutagenic compound based on its testing for gene mutation and chromosomal aberrations.

Dimethoate has been classified as a possible human carcinogen (category C) by the Office of Pesticide Programs' Health Effects Division's Carcinogenicity Peer Review Committee. The Peer Review Committee supports this classification based on the appearance of equivocal hemolymphoreticular tumors in male mice, the compound-related (no dose response) weak effect of combined spleen (hemangioma and hemangiosarcoma), skin (hemangiosarcoma), and lymph (angioma and angiosarcoma) tumors in male rats, and positive mutagenic activity associated with dimethoate.

The Peer Review Committee concluded that the lung tumors seen in male mice were not biologically significant tumors related to compound administration, since there were no statistically significant differences based on pair-wise comparisons with controls and each dose level. The incidence of lung tumors in the control groups was variable, and there was a high background level of these tumors. The increase in lymphoma observed in male mice in the high-dose group was of borderline statistical significance by pair-wise comparison with controls. The incidence of lymphoma in mice is also common and variable. The Committee agreed that the increased incidence for the combined hemolymphoreticular tumors in male mice is compound related but could only classify this incidence as equivocal. The incidence of hemolymphoreticular tumors in male mice was relatively low and consistent with historical control, only occurred in one sex (males), and was evident only in the high-dose group.

The Committee concluded that in female mice there were no significant pair-wise comparisons, there was only the trend with combined tumors, and the combined incidence was similar to historical controls. In addition, there also was no evidence of precursor lesions to carcinogenicity. Regarding the carcinogenicity study in rats, the Committee concluded that although there were significant pair-wise comparisons at the low and high doses for all tumors combined, these tumors did not indicate much more than a weak effect.

EPA has concluded that dimethoate poses no greater than a negligible cancer risk to humans; therefore, the Agency has chosen to use reference dose calculations to estimate dietary risk from dimethoate residues. The reference dose (RfD) for dimethoate is established at 0.0005 mg/kg body weight/day. The RfD is based on a NOEL of 0.05 mg/kg bwt/day for brain cholinesterase inhibition from a 2-year feeding study in rats and an uncertainty factor of 100. The anticipated residue contribution (ARC) for the general population from published uses and the proposed use on asparagus utilizes 21 percent of the RfD. The ARC for the subgroup most highly exposed, nonnursing infants, utilizes 41 percent of the RfD based on published uses and the proposed use on asparagus. The dietary risk assessment indicates that there is no appreciable risk from the establishment of the proposed tolerance for asparagus.

The nature of the residue in plants is adequately understood and an adequate analytical method, gas chromatography with a flame photometric detector, is available for enforcement purposes. An analytical method for enforcing this tolerance has been published in the Pesticide Analytical Manual (PAM), Vol. II. No secondary residues in meat, milk, poultry, or eggs are expected since asparagus is not considered a livestock feed commodity. There are presently no actions pending against the continued registration of this chemical.

Based on the above information considered by the Agency the tolerance established by amending 40 CFR 180.204 would protect the public health. Therefore, it is proposed that the tolerance be established as set forth below.

Any person who has registered or submitted an application for registration of a pesticide, under the Federal Insecticide, Fungicide, and Rodenticide Act (FIFRA) as amended, which contains any of the ingredients listed herein, may request within 30 days after publication of this document in the Federal Register that this rulemaking proposal be referred to an Advisory Committee in accordance with section 408(e) of the Federal Food, Drug, and Cosmetic Act.

A record has been established for this rulemaking under docket number [PP 4E4374/P617] (including any comments and data submitted electronically as described below). A public version of this record, including printed, paper versions of electronic comments, which does not include any information claimed as CBI, is available for inspection from 8 a.m. to 4:30 p.m., Monday through Friday, excluding legal holidays. The public record is located in Room 1132 of the Public Response and Program Resources Branch, Field Operations Division (7506C), Office of Pesticide Programs, Environmental Protection Agency, Crystal Mall #2, 1921 Jefferson Davis Highway, Arlington, VA.

The official record for this rulemaking, as well as the public version, as described above will be kept in paper form. Accordingly, EPA will transfer all comments received electronically into printed, paper form as they are received and will place the paper copies in the official rulemaking record which will also include all comments submitted directly in writing. The official rulemaking record is the paper record maintained at the address in ''ADDRESSES'' at the beginning of this document.

Under Executive Order 12866 (58 FR 51735, Oct. 4, 1993), the Agency must determine whether the regulatory action is ''significant'' and therefore subject to all the requirements of the Executive Order (i.e., Regulatory Impact Analysis, review by the Office of Management and Budget (OMB)). Under section 3(f), the order defines ''significant'' as those actions likely to lead to a rule (1) having an annual effect on the economy of $100 million or more, or adversely and materially affecting a sector of the economy, productivity, competition, jobs, the environment, public health or safety, or State, local or tribal governments or communities (also known as ''economically significant≥); (2) creating serious inconsistency or otherwise interfering with an action taken or planned by another agency; (3) materially altering the budgetary impacts of entitlement, grants, user fees, or loan programs; or (4) raising novel legal or policy issues arising out of legal mandates, the President's priorities, or the principles set forth in this Executive Order.

Pursuant to the terms of this Executive Order, EPA has determined that this rule is not ''significant'' and is therefore not subject to OMB review.

Pursuant to the requirements of the Regulatory Flexibility Act (Pub. L. 96-354, 94 Stat. 1164, 5 U.S.C. 601-612), the Administrator has determined that regulations establishing new tolerances or raising tolerance levels or establishing exemptions from tolerance requirements do not have a significant economic impact on a substantial number of small entities. A certification statement to this effect was published in the **Federal Register** of May 4, 1981 (46 FR 24950).

List of Subjects in 40 CFR Part 180

Administrative practice and procedure, Agricultural commodities, Pesticides and pests, Reporting and recordkeeping requirements.

Dated: June 23, 1995

Peter Caulkins,

Acting Director, Registration Division, Office of Pesticide Programs.

Therefore, it is proposed that 40 CFR part 180 be amended as follows:

PART 180—[AMENDED]

1. The authority citation for part 180 continues to read as follows:

Authority: 21 U.S.C. 346a and 371.

2. In § 180.204, paragraph (b) is amended in the table therein by adding and alphabetically inserting a new entry, to read as follows:

§ 180.204 Dimethoate including its oxygen analog; tolerances for residues.

* * * * *

(b) * * *

Commodity	Parts per million
Asparagus	0.15

* * * * *

[FR Doc. 95–16432 Filed 7–3–95; 8:45 am]

BILLING CODE 6560–50–F

FEDERAL EMERGENCY MANAGEMENT AGENCY

44 CFR Part 67

[Docket No. FEMA–7138]

Proposed Flood Elevation Determinations

AGENCY: Federal Emergency Management Agency, FEMA.

ACTION: Proposed rule.

SUMMARY: Technical information or comments are requested on the proposed base (1% annual chance) flood elevations and proposed base flood elevation modifications for the communities listed below. The base flood elevations are the basis for the floodplain management measures that the community is required either to adopt or to show evidence of being already in effect in order to qualify or remain qualified for participation in the National Flood Insurance Program (NFIP).

DATES: The comment period is ninety (90) days following the second publication of this proposed rule in a newspaper of local circulation in each community.

ADDRESSES: The proposed base flood elevations for each community are available for inspection at the office of the Chief Executive Officer of each community. The respective addresses are listed in the following table.

FOR FURTHER INFORMATION CONTACT: Michael K. Buckley, P.E., Chief, Hazard Identification Branch, Mitigation Directorate, 500 C Street, SW., Washington, DC 20472, (202) 646–2756.

SUPPLEMENTARY INFORMATION: The Federal Emergency Management Agency (FEMA or Agency) proposes to make determinations of base (1% annual chance) flood elevations and modified base flood elevations for each community listed below, in accordance with section 110 of the Flood Disaster Protection Act of 1973, 42 U.S.C. 4104, and 44 CFR 67.4(a).

These proposed base flood and modified base flood elevations, together with the floodplain management criteria required by 44 CFR 60.3, are the minimum that are required. They should not be construed to mean that the community must change any existing ordinances that are more stringent in their floodplain management requirements. The community may at any time enact stricter requirements of its own, or pursuant to policies established by other Federal, state or regional entities. These proposed elevations are used to meet the floodplain management requirements of the NFIP and are also used to calculate the appropriate flood insurance premium rates for new buildings built after these elevations are made final, and for the contents in these buildings.

National Environmental Policy Act. This proposed rule is categorically excluded from the requirements of 44 CFR Part 10, Environmental Consideration. No environmental impact assessment has been prepared.

Regulatory Flexibility Act. The Associate Director, Mitigation Directorate, certifies that this proposed rule is exempt from the requirements of the Regulatory Flexibility Act because proposed or modified base flood elevations are required by the Flood Disaster Protection Act of 1973, 42 U.S.C. 4104, and are required to establish and maintain community eligibility in the National Flood Insurance Program. As a result, a regulatory flexibility analysis has not been prepared.

Regulatory Classification. This proposed rule is not a significant regulatory action under the criteria of section 3(f) of Executive Order 12866 of September 30, 1993, Regulatory Planning and Review, 58 FR 51735.

Executive Order 12612, Federalism. This proposed rule involves no policies that have federalism implications under Executive Order 12612, Federalism, dated October 26, 1987.

Executive Order 12778, Civil Justice Reform. This proposed rule meets the applicable standards of section 2(b)(2) of Executive Order 12778.

List of Subjects in 44 CFR Part 67

Administrative practice and procedure, Flood insurance, Reporting and recordkeeping requirements.

Accordingly, 44 CFR part 67 is proposed to be amended as follows:

PART 67—[AMENDED]

1. The authority citation for part 67 continues to read as follows:

Authority: 42 U.S.C. 4001 et seq.; Reorganization Plan No. 3 of 1978, 3 CFR, 1978 Comp., p. 329; E.O. 12127, 44 FR 19367, 3 CFR, 1979 Comp., p. 376.

§ 67.4 [Amended]

2. The tables published under the authority of § 67.4 are proposed to be amended as follows:

Source of Flooding and Location	#Depth in feet above ground. *Elevation in feet (NGVD)
GEORGIA	
Cook County (Unincorporated Areas)	
Bear Creek:	
Approximately 1.1 miles downstream of East Sixth Street in the City of Adel	*214
At a point approximately 1,000 feet upstream of the confluence of Giddens Mill Creek	*230
Giddens Mill Creek:	
At confluence with Bear Creek	*230
Approximately 325 feet upstream of Elm Street	*231
Maps available for inspection at the County Commissioner's Office, 212 North Parrish Street, Adel, Georgia.	
Send comments to Ms. Faye Hughes, Cook County Administrator, 212 North Parrish Street, Adel, Georgia 31620.	
NEW YORK	
Kiantone (Town), Chautauqua County	
Stillwater Creek:	
Approximately 1,880 feet downstream of U.S. Route 62	*1,244
Approximately 1,665 feet upstream of confluence of Widow Bostwick Creek	*1,253
Widow Bostwick Creek:	
At confluence with Stillwater Creek	*1,250
At South Main Street extension	*1,315
Maps available for inspection at the Town Hall, 1521 Peck Settlement Road, Jamestown, New York.	
Send comments to Mr. Michael C. Haller, Supervisor of the Town of Kiantone, Town Hall, 1521 Peck Settlement Road, P.O. Box 2076, Station A, Jamestown, New York 14702.	
OHIO	
Payne (Village), Paulding County	
Flatrock Creek:	
At Sitzler Road	*741
Approximately 0.9 mile upstream of Sitzler Road	*743
Maps available for inspection at the Village of Payne Water Plant, 211 North Laura Street, Payne, Ohio.	
Send comments to The Honorable Michael Brigner, Mayor of the Village of Payne, 131 North Main Street, Payne, Ohio 45880.	
WISCONSIN	
Cadott (Village), Chippewa County	
Yellow River:	
At downstream corporate limits	*943
At upstream corporate limits	*967
Maps available for inspection at the Cadott Village Office, 110 Central Street, Cadott, Wisconsin.	
Send comments to Mr. Ken Luebftorf, President of the Village of Cadott, P.O. Box 40, Cadott, Wisconsin 54727.	

§ 67.4 [Amended]

3. The tables published under the authority of § 67.4 are proposed to be amended as follows:

State	City/town/county	Source of flooding	Location	#Depth in feet above ground. *Elevation in feet (NGVD)	
				Existing	Modified
Delaware	Arden (village), New Castle County.	South Branch, Naaman Creek.	Approximately 2,000 feet upstream of CSX Transportation.	None	*188
			Approximately 1,100 feet upstream of Marsh Road.	None	*270

State	City/town/county	Source of flooding	Location	#Depth in feet above ground. *Elevation in feet (NGVD)	
				Existing	Modified
Maps available for inspection at the Village Secretary's Office, 2005 Harvey Road, Arden, Delaware.					
Send Comments to Ms. Irene O'Connor, Arden Village Secretary, 2005 Harvey Road, Arden, Delaware 19810.					
Delaware	Ardentown (village), New Castle County.	South Branch, Naaman Creek.	Approximately 100 feet upstream of CONRAIL.	None	*135
			Approximately 2,000 feet upstream of CONRAIL.	None	*189
Maps available for inspection at the Ardentown Chairman's Office, 2308 Brae Road, Ardentown, Delaware.					
Send comments to Mr. Harold Kalmus, Chairman of the Ardentown Village Assembly, 2308 Brae Road, Ardentown, Delaware 19810.					
Delaware	New Castle County (unincorporated areas).	Shellpot Creek	Approximately 1,275 feet downstream of Governor Printz Boulevard.	*10	*17
			At Kennedy Road	None	*376
		Naaman Creek	Approximately 350 feet upstream of confluence with Delaware River.	*10	*11
			Approximately 0.35 mile upstream of State Route 92.	None	*44
		South Branch, Naaman Creek.	At confluence with Naaman Creek	None	*35
			At upstream corporate limit	None	*359
		Dragon Creek	Upstream side of 5th Street	None	*10
			Approximately 1.1 miles upstream of 5th Street.	None	*10
		Persimmon Run	At its confluence with West Branch of Christina River.	None	*97
			Approximately 0.6 mile upstream of Sandy Brae Road.	None	*115
		Yorkshire Ditch	At the confluence with the Christina River	*63	*64
			Approximately 260 feet upstream of its confluence with the Christina River.	None	*65
		Tributary to West Branch Christina River.	Approximately 750 feet upstream of the confluence with West Branch Christina River.	None	*109
			Approximately 1,260 feet upstream of the confluence with West Branch Christina River.	None	*110
		West Branch Christina River.	Approximately 1,000 feet upstream of Swim Club Access Road.	*90	*91
			Approximately 740 feet upstream of Elkton Road.	*105	*108
		East Branch Christina River.	At the confluence with the Christina River	*155	*157
			Approximately 0.9 mile upstream of Wedgewood Road.	*230	*229
		Christina River	Approximately 570 feet upstream of Nottingham Road (State Route 273).	None	*134
			Approximately 350 feet upstream of Wedgewood Road.	*155	*162
Maps available for inspection at the Engineering Building, 2701 Capital Trail, Newark, Delaware.					
Send comments to Mr. Dennis E. Greenhouse, New Castle County Executive, City-County Building, 800 French Street, Wilmington, Delaware 19801.					
Delaware	Newark (city), New Castle County.	West Branch	At Swim Club Access Road	*87	*88
		Christina River	At State boundary	*105	*108
		Christina River	Approximately 570 feet upstream of Nottingham Road (Route 273).	None	*134
			At downstream side of Wedgewood Road	*155	*159
		Persimmon Run	At its confluence with West Branch Christina River.	None	*97
			Approximately 100 feet upstream of Sandy Brae Road.	None	*109
		Silver Brook	At the confluence with Christina River	None	*70
			Approximately 420 feet upstream of Park Lane.	None	*78

State	City/town/county	Source of flooding	Location	#Depth in feet above ground. *Elevation in feet (NGVD)	
				Existing	Modified
		Yorkshire Ditch	Approximately 260 feet upstream of confluence with the Christina River.	None	*65
			Approximately 710 feet upstream of Bellview Road.	None	*70
		Tributary to West Branch Christina River.	At the confluence with West Branch Christina River.	*105	*108
		River	Approximately 750 feet upstream of the confluence with West Branch Christina River.	*105	*109
Maps available for inspection at the City Hall, 220 Elkton Road, Newark, Delaware.					
Send comments to The Honorable Ron Gardner, Mayor of the City of Newark, P.O. Box 390, Newark, Delaware 19715.					
Delaware	Wilmington (city), New Castle County.	Shellpot Creek	Approximately 1,275 feet downstream of Governor Printz Boulevard.	*10	*17
			Approximately 500 feet downstream of Governor Prince Boulevard.	*10	*17
Maps available for inspection at the Louis L. Redding City-County Building, City Clerk's Office, 800 French Street, Wilmington, Delaware.					
Send comments to The Honorable James H. Sills, Jr., Mayor of the City of Wilmington, City-County Building, 800 French Street, Wilmington, Delaware 19801–3537.					
Florida	St. Cloud (city), Osceola County.	East Lake Tohopekaliga	In the vicinity of the intersection of Montana Avenue and Second Avenue.	*62	*58
			Approximately 1,400 feet east of the intersection of Cypress Street and Oregon Avenue.	None	*62
Maps available for inspection at the St. Cloud Planning Department, 2901 17th Street, St. Cloud, Florida.					
Send comments to The Honorable Ernie Geahart, Mayor of the City of St. Cloud, City Hall, 1300 Ninth Street, St. Cloud, Florida 34769.					
Georgia	Fayetteville (city), Fayette County.	Ginger Cake Creek	At Lanier Avenue	*812	*813
			Approximately 50 feet downstream of Fayetteville Waterworks dam.	*817	*821
		Perry Creek	At upstream side of State Route 92 (Lee Street).	None	*878
			Approximately 100 feet upstream of State Route 92 (Lee Street).	None	*878
Maps available for inspection at the Fayetteville Engineering Department, 240 East Lanier Avenue, Fayetteville, Georgia.					
Send comments to The Honorable Mike Wheat, Mayor of the City of Fayetteville, P.O. Box 302, Fayetteville, Georgia 30214.					
Georgia	Fayette County Unincorporated Areas.	Morning Creek	Approximately 0.72 mile upstream of the confluence with Flint River.	*789	*788
			Approximately 250 feet upstream of the County boundary.	*841	*843
		Broadnax Creek	At the confluence with Morning Creek	*839	*841
			Approximately 1,300 feet upstream of the upstream County boundary.	*839	*841
		Tar Creek	At the confluence with Whitewater Creek	*843	*846
			Approximately 0.66 mile upsteam of Rivers Road.	None	*926
		Sandy Creek	At the confluence with Whitewater Creek	*800	*808
			Approximately 150 feet upstream of Adams Road.	None	*882
		Sandy Creek	At the confluence with Sandy Creek	*822	*824
		Tributary	At a point approximately 0.33 mile upstream of the confluence with Sandy Creek.	*823	*824
		Flat Creek	At a point approximately 0.53 mile upstream of Smoke Rise Terrace.	None	*856
			At a point approximately 0.24 mile downstream of Pendleton Trail.	None	*910
		Line Creek	Approximately 0.9 mile downstream of Rockaway Road.	None	*746
			Approximately 0.8 mile downstream of Rockaway Road.	None	*751

State	City/town/county	Source of flooding	Location	#Depth in feet above ground. *Elevation in feet (NGVD)	
				Existing	Modified
			Approximately 300 feet upstream of the confluence of Trickum Creek.	None	*872
			Approximately 500 feet upstream of Johnson Road.	None	*894
		Trickum Creek	Approximately 200 feet upstream of the confluence with Line Creek.	None	*872
			Approximately 200 feet upstream of County boundary.	None	*919
		Ginger Cake Creek	At the confluence with Whitewater Creek	*791	*793
			Approximately 0.44 mile upstream of Brogdon Road.	None	*889
		Perry Creek	At the confluence with Whitewater Creek	*776	*780
			At State Route 92 (Lee Street)	None	*876
		Whitewater Creek	At a point approximately 350 feet downstream of State Route 85.	None	*750
			Approximately 500 feet downstream of confluence of Whitewater Creek Tributary.	*874	*873
		South Camp Creek	At confluence with Whitewater Creek	*757	*759
			Approximately 0.73 mile upstream of the confluence with Whitewater Creek.	*758	*759
Maps available for inspection at the Fayette County Engineering Department, 140 Stonewall Avenue West, Fayetteville, Georgia.					
Send comments to Mr. Rick Price, Chairman, Fayette County Board of Commissioners, 140 Stonewall Avenue West, Fayette, Georgia 30214.					
Georgia	City of Peachtree City,.	Flat Creek	Approximately 250 feet downstream of Lake Kedron Dam.	*807	*808
	Fayette County		Approximately 0.53 mile upstream of Smoke Rise Terrace.	None	*856
		Gin Branch	At the confluence with Flat Creek	*817	841
			Approximately 400 feet downstream of Peachtree Parkway.	*840	*841
		South Camp Creek	Approximately 1,100 feet upstream of E.A. Brown Dam.	*790	787
			Approximately 100 feet upstream of Spear Road.	None	*847
Maps available for inspection at the Peachtree Engineering Department, 151 Willow Bend Road, Peachtree City, Georgia.					
Send comments to The Honorable Bob Lenox, May of the City of Peachtree City, 151 Willow Bend Road, Peachtree City, Georgia 30269.					
Georgia	City of Peachtree City,.	Flat Creek	Approximately 250 feet downstream of Lake Kedron Dam.	*807	*808
	Fayette County		Approximately 0.53 mile upstream of Smoke Rise Terrace.	None	*856
		Gin Branch	At the confluence with Flat Creek	*817	841
			Approximately 400 feet downstream of Peachtree Parkway.	*840	*841
		South Camp Creek	Approximately 1,100 feet upstream of E.A. Brown Dam.	*790	787
			Approximately 100 feet upstream of Spear Road.	None	*847
Maps available for inspection at the Peachtree Engineering Department, 151 Willow Bend Road, Peachtree City, Georgia.					
Send comments to The Honorable Bob Lenox, Mayor of the City of Peachtree City, 151 Willow Bend Road, Peachtree City, Georgia 30269.					
Georgia	Tyrone (town),	Trickum Creek	Approximately 1,300 feet upstream of the confluence with Line Creek.	None	*876
	Fayette County		Approximately 0.52 mile downstream of Kirkley Road.	None	*895
		Flat Creek	Approximately 0.40 mile upstream of Dogwood Terrace.	None	878
			Approximately 125 feet upstream of Swanson Drive.	None	*927
Maps available for inspection at the Building Official's Office, 881 Senoia Road, Tyrone, Georgia.					
Send comments to The Honorable Norman Davis, Mayor of the Town of Tyrone, 881 Senoia Road, Tyrone, Georgia 30290.					
Illinois	Adams County (unincorporated areas).	Interior Drainage	Approximately 600 feet south of the confluence of Curtis Creek.	*485	*468

State	City/town/county	Source of flooding	Location	#Depth in feet above ground. *Elevation in feet (NGVD)	
				Existing	Modified
			Approximately 900 feet northeast of the confluence of Mill Creek.	*480	*468

Maps available for inspection at the Adams County Highway Department, 5200 Broadway, Quincy, Illinois.

Send comments to Mr. Leslie J. Knox, Adams County Board Chairman, Ursa, Illinois 62376.

Minnesota	Aitkin County, (unincorporated areas).	Cedar Lake	Entire shoreline within community	None	*1,202
		Lake Minnewawa	Entire shoreline within community	None	*1,225
		Horseshoe Lake	Entire shoreline within community	None	*1,225
		Big Pine Lake	Entire shoreline within community	None	*1,265
		Round Lake	Entire shoreline within community	None	*1,260

Maps available for inspection at the Aitkin County Office of Zoning, Courthouse, 209 2nd Street NW., Aitkin, Minnesota.

Send comments to Ms. Margaret Sherman, Chairman of the Aitkin County Board of Commissioners, Aitkin County Courthouse, 209 2nd Street, NW., Aitkin, Minnesota 56431.

Minnesota	International Falls (city), Koochiching County.	Rainy River	Approximately 3.7 miles downstream of Toll Bridge.	None	*1,089
			Approximately 0.5 mile upstream of Toll Bridge.	None	*1,111

Maps available for inspection at the City Engineer's Office, 601 6th Avenue, International Falls, Minnesota.

Send comments to The Honorable Jack Murray, Mayor of the City of International Falls, P.O. Box 392, International Falls, Minnesota 56649.

Minnesota	Koochiching County, (unincorporated areas).	Rainy River	At downstream county boundary within the City of International Falls.	None	*1,111
			At Canadian National Railroad bridge	None	*1,112

Maps available for inspection at the Administration Office, Koochiching County Courthouse, International Falls, Minnesota.

Send comments to Mr. Larry Chezick, Chairman of the Koochiching County Board of Commissioners, Koochiching County Courthouse, International Falls, Minnesota 56649.

New Jersey	North Wildwood (city), Cape May County.	Atlantic Ocean	At the intersection of 16th Avenue and Ocean Avenue.	*10	*11
			At the intersection of 10th Avenue and JFK Drive.	*11	*14
			At the intersection of Oak Avenue and Virginia Avenue.	*11	*10

Maps available for inspection at the Joint Construction Office of Wildwood, 4004 Pacific Avenue, North Wildwood, New Jersey.

Send comments to The Honorable Aldo A. Palombo, Mayor of the City of North Wildwood, P.O. Box 499, North Wildwood, New Jersey 08260.

New Jersey	Wildwood (city), Cape May County.	Atlantic Ocean	At the intersection of Taylor Avenue and Ocean Avenue.	*10	*14
			At the intersection of Garfield Avenue and Ocean Avenue.	*10	*11

Maps available for inspection at the Joint Construction Office of Wildwood, 4004 Pacific Avenue, Wildwood, New Jersey.

Send comments to The Honorable Edmund Grant, The Mayor of the City of Wildwood, 4400 New Jersey Avenue, Wildwood, New Jersey 08260.

New Jersey	Wildwood Crest (borough), Cape May County.	Atlantic Ocean	At the intersection of Ocean Avenue and Buttercup Road.	*10	*14
			Approximately 200 feet southeast of the intersection of Hollywood Avenue and Atlantic Avenue.	*10	*11
			Approximately 170 feet northwest of the intersection of Myrtle Road and Ocean Avenue.	*11	*10

State	City/town/county	Source of flooding	Location	#Depth in feet above ground. *Elevation in feet (NGVD)	
				Existing	Modified
Maps available for inspection at the Joint construction Office of Wildwood (JCOW), 4004 Pacific Avenue, Wildwood, New Jersey.					
Send comments to The Honorable John Pantalone, Mayor of the Borough of Wildwood Crest, 6101 Pacific Avenue, P.O. Box 529, Wildwood Crest, New Jersey 08260.					
New York	Waterford (town), Saratoga County.	Unnamed Ponding Area	Northeast of the Intersection of Old Champlain Canal and the Delaware and Hudson Railroad.	*34	*36
Maps available for inspection at the Town Hall, 65 Broad Street, Waterford, New York.					
Send comments to Mr. John Lawler, Supervisor of the Town of Waterford, Saratoga County, 65 Broad Street, Waterford, New York 12188.					
Ohio	Oakwood (village), Paulding County.	Auglaize River	Approximately 0.5 mile downstream of Norfolk and Southern Railroad.	None	*711
			Approximately 0.6 mile upstream of State Route 613.	None	*712
Maps available for inspection at the Village Hall, 228 North First Street, Oakwood, Ohio.					
Send comments to The Honorable Martin W. Harmon, Mayor of the Village of Oakwood, P.O. Box 128, Oakwood, Ohio 45873.					
Pennsylvania	Caln (township), Chester County.	Beaver Creek	Approximately 0.6 mile downstream of Lloyd Avenue.	None	*245
			Approximately 300 feet downstream of Lloyd Avenue.	None	*250
		Copeland Run	At CONRAIL	None	*282
			Approximately 100 feet upstream of Donofrio Drive.	None	*282
Maps available for inspection at the Caln Township Engineering and Codes Department, Municipal Building, 253 Municipal Drive, Thorndale, Pennsylvania.					
Send comments to Mr. Daniel Fox, Township Manager, 253 Municipal Drive, P.O. Box 149, Thorndale, Pennsylvania 19372–0149.					
Pennsylvania	Downingtown (borough), Chester County.	East Branch, Brandywine Creek.	Approximately 650 feet downstream of U.S. Highway 30.	None	*247
			Approximately 375 feet upstream of U.S. Highway 30.	None	*250
Maps available for inspection at the Borough Hall, 4 West Lancaster Avenue, Downingtown, Pennsylvania.					
Send comments to The Honorable Linda M. Baugher, Mayor of the Borough of Downingtown, 4 West Lancaster Avenue, P.O. Box 403, Downingtown, Pennsylvania 19335–2800.					
Pennsylvania	East Brandywine (Township), Chester County.	Beaver Creek	At its upstream corporate limit	*483	*482
Maps available for inspection at the East Brandywine Township Municipal Office, 1214 Horseshoe Pike, Downingtown, Pennsylvania.					
Send Comments to Hudson L. Voltz, Esquire, Chairman of the East Brandywine Township Board of Supervisors, 1214 Horseshoe Pike, Downingtown, Pennsylvania 19335.					
Pennsylvania	East Caln (township), Chester County.	East Branch Brandywine Creek.	Approximately 650 feet downstream of CONRAIL, approximately 600 feet east of the intersection of Brandywine Avenue and Boot Road.	None	*233
Maps available for inspection at the East Caln Township Building, 110 Bell Tavern Road, P.O. Box 232, Downingtown, Pennsylvania.					
Send comments to Mr. William van Roden, Chairman of the East Caln Township Board of Supervisors, 110 Bell Tavern Road, P.O. Box 232, Downingtown, Pennsylvania 19335.					
Pennsylvania	East Coventry (township), Chester County.	Schuylkill River	At the confluence with Pigeon Creek	*126	*122
			At the upstream corporate limits	*139	*135
		Pigeon Creek	At the confluence with the Schuylkill River	*126	*125
			At downstream side of Bethel Road	*126	*125

State	City/town/county	Source of flooding	Location	#Depth in feet above ground. *Elevation in feet (NGVD)	
				Existing	Modified
Maps available for inspection at the East Coventry Township Building, 855 Ellis Woods Road, Pottstown, Pennsylvania.					
Send comments to Mr. Robert J. Megay, Chairman of the Board of Supervision, 855 Ellis Woods Road, Pottstown, Pennsylvania 19464.					
Pennsylvania	East Fallowfield (township), Chester County.	Doe Run	Approximately 1.64 miles downstream of State Route 82.	None	*264
		West Branch, Brandywine Creek.	Approximately 700 feet downstream of Strasburg Road.	*250	*251
Maps available for inspection at the Township Building, 2264 Strasburg Road, East Fallowfield Township Board of Supervisors, 2264 Strasburg Road, East Fallowfield, Pennsylvania.					
Send comments to Mr. David Leavitt, Chairman of the East Fallowfield, Pennsylvania 19320–4426.					
Pennsylvania	East Pikeland (township), Chester County.	Schuylkill River	At the confluence of Stony Run	*110	*107
			Approximately 0.8 mile upstream of CONRAIL.	*113	*109
		French Creek	Downstream of State Routes 724 and 23 (Schuylkill Road).	*117	*118
Maps available for inspection at the East Pikeland Township Building, Rapps Dam Road, Pemberton, Pennsylvania.					
Send comments to Ms. Barbara Appleman, Chairwoman of the Board of Supervisors, Township of East Pikeland, P.O. Box 58, Pemberton, Pennsylvania 19442.					
Pennsylvania	East Vincent (township), Chester County.	Schuylkill River	Approximately 1,300 feet upstream of State Route 683.	*117	*113
			At the upstream corporate limits	*127	*122
		Pigeon Creek	the confluence with Schuylkill River	*127	*122
			Approximatley 1,550 feet downstream of Bethel Road.	None	*124
		French Creek	Approximately 1,700 feet downstream of Hollow Road.	None	*206
			Approximately 0.4 mile upstream of Bertolet School Road.	None	*249
Maps available for inspection at the East Vincent Township Building, 262 Ridge Road, Spring City, Pennsylvania.					
Send comments to Mr. Everett Wilson, Chairman of the East Vincent Township Board of Supervisors, 74 Seven Stars Road, Spring City, Pennsylvania 19475.					
Pennsylvania	Highland (township), Chester County.	Buck Run	Approximately 1,050 feet downstream of Buck Run Road.	None	*357
			Approximately 900 feet upstream of most upstream CONRAIL crossing.	None	*447
		Doe run	Approximately 560 feet upstream of abandoned CONRAIL.	None	*339
			Approximately 1,400 feet upstream of Creek Road.	None	*413
Maps available for inspection at the Highland Township Building, R.D. 3, Coatesville, Pennsylvania.					
Send comments to Mr. David McGuigan, Chairman of the Township of Highland Board of Supervisors, R.D. 2, Box 152, Parkesburg, Pennsylvania 19320.					
Pennsylvania	Kennett Square (borough) Chester County.	Tributary 2 to East Branch Red Clay Creek.	Approximately 750 feet downstream of Walnut Road.	None	*316
Maps available for inspection at the Kennett Square Borough Hall, 120 North Broad Street, Kennett Square, Pennsylvania.					
Send comments to The Honorable Charles Cramer, Mayor of the Borough of Kennett Square, P.O. Box 5, Kennett Square, Pennsylvania 19348.					
Pennsylvania	New Eagle (borough) Washington County.	Monongahela River	Approximately 200 feet downstream of confluence of Mingo Creek.	*753	*755
			Upstream corporate limits	*754	*755

State	City/town/county	Source of flooding	Location	#Depth in feet above ground. *Elevation in feet (NGVD)	
				Existing	Modified
Maps available for inspection at the Borough Office, 157 Main Street, New Eagle, Pennslyvania.					
Send comments to The Honorable Thomas McGinty, Mayor of the Borough of New Eagle 157 Main Street, New Eagle, Pennsylvania 15067.					
Pennsylvania	New Garden (township) Chester County.	West Branch Red Clay Creek.	Approximately 1,050 feet upstream of Cedarcroft Road.	None	*286
			At the downstream side of Township Line Road..	None	*294
Maps available for inspection at the New Garden Township Building, 8934 Gap Newport Pike, Avondale, Pennsylvania.					
Send comments to Mr. Robert N. Taylor, Chairman of the Township of New Garden Board of Supervisors, 8934 Gap Newport Pike, Avondale, Pennsylvania 19311.					
Pennsylvania	North Coventry (township), Chester Country.	Schuylkill Rover	Approximately 900 feet downstream of U.S. Route 422.	*139	*135
			At the county boundary	*151	*148
Maps available for inspection at the North Coventry Township Building, 845 South Hanover Street, Pottstown, Pennsylvania.					
Send comments to Mr. Robert Layman, North Coventry Township Manager, 845 Hanover Street, Pottstown, Pennsylvania 19465.					
Pennsylvania	Phoenixville (borough) Chester County.	Schuylkill River	Approximately 0.6 mile downstream of State Route 29 (Church Street).	*101	*98
			At confluence of Stony Run	*110	*107
		French Creek	At confluence with Schuylkill River	*102	*99
			Approximately 50 feet downstream of Main Street.	*102	*101
Maps available for inspection at the Phoenixville Borough Hall, 140 Church Street, Phoenixville, Pennsylvania.					
Send comments to The Honorable Charles F. Ash, Mayor of the Borough of Phoenixville, 140 Church Street, Phoenixville, Pennsylvania 19460.					
Pennsylvania	Roscoe (borough) Washington County.	Monongahela River	Downstream corporate limits	*765	*768
			Upstream corporate limits	*766	*769
Maps available for inspection at the Borough Secretary's Office, 503 Underwood Street, Roscoe, Pennsylvania.					
Send comments to The Honorable Harold J. Donaldson, Mayor of the Borough of Roscoe, Washington County, P.O. Box 83, Roscoe, Pennsylvania 15477.					
Pennsylvania	Sadsbury (township), Chester County.	Little Buck Run	Approximately 0.6 mile downstream of most downstream crossing of U.S.Route 10.	None	*470
			Approximately 610 feet upstream of Private Road.	None	*592
Maps available for inspection at the Sadsbury Township Building, Pine Alley, Sadsburyville, Pennsylvania.					
Send comments to Mr. Charles A. Pluck, Chairman of the Sadsbury Township Board of Supervisors, P.O. Box 261, Sadsburyville, Pennsylvania 19369.					
Pennsylvania	Schuylkill (township), Chester County.	Schuylkill River	At confluence of Valley Creek (at the county boundary).	*93	*88
			Approximately 0.5 mile upstream of confluence of Pickering Creek.	*101	*98
		Pickering Creek	At confluence with Schuylkill River	*100	*98
			At downstream side of State Route 23	*100	*98
		French Creek	At upstream side of State Route 23 and 724 (Nutt Road).	None	*118
			At downstream side of Township Line Road.	None	*119

State	City/town/county	Source of flooding	Location	#Depth in feet above ground. *Elevation in feet (NGVD)	
				Existing	Modified
Maps available for inspection at the Schuylkill Township Hall, 801 Valley Park Road, Phoenixville, Pennsylvania.					
Send comments to Mr. T.J. Ryan, Chairman of the Board of Supervisors, Township of Schuylkill, 801 Valley Park Road, Phoenixville, Pennsylvania 19460.					
Pennsylvania	Spring City (borough), Chester County.	Schuylkill River	Approximately 1.2 miles downstream of State Route 683.	*112	*109
			Approximately 1,300 feet upstream of State Route 683.	*117	*113
Maps available for inspection at the Spring City Borough Hall, 6 South Church Street, Spring City, Pennsylvania.					
Send comments to The Honorable Timothy W. Hoyle, Mayor of the Borough of Spring City, 431 Broad Street, Spring City, Pennsylvania 19475.					
Pennsylvania	Thornbury (township), Chester County.	West Fork of East Branch Chester Creek.	Approximately 950 feet upstream of Farm Road.	None	*287
			Approximately 1,600 feet upstream of Farm Road.	None	*290
Maps available for inspection at the Thornbury Township Building, Building #3, 754 Cheyney-Thornton Road, Westtown, Pennsylvania.					
Send comments to Mr. Charles A. Wilson, Chairman of the Thornbury Township Board of Supervisors, P.O. Box 30, Westtown, Pennsylvania 19319.					
Pennsylvania	Upper Uwchlan (township), Chester County.	East Branch, Brandywine Creek.	Approximately 575 feet downstream of Dolans Mill Road.	None	*283
			Approximately 0.7 mile upstream of Lyndell Road at its upstream corporate limit.	None	*343
Maps available for inspection at the upper Uwchlan Township Building, 140 Pottstown Pike, Chester Springs, Pennsylvania.					
Send comments to Mr. Walter Styer, Chairman of the Upper Uwchlan Township Board of Supervisors, 140 Pottstown Pike, Chester Springs, Pennsylvania 19425.					
Pennsylvania	West Bradford (township), Chester County.	East Branch, Brandywine Creek.	Approximately 0.75 mile upstream of Strasburg Road.	None	*206
			Approximately 0.3 mile downstream of Downingtown West Chester Road.	None	*209
		West Branch, Brandywine Creek.	Approximately 750 feet upstream of its confluence with Tributary 2.	None	*194
			At confluence of Broad Run	None	*198
			Approximately 750 feet upstream of Northbrook Road.	None	*203
Maps available for inspection at the West Bradford Township Hall, 1385 Campus Drive, Downingtown, Pennsylvania.					
Send comments to Mr. Jack H. Hines, West Bradford Township Manager, 1385 Campus Drive, Downingtown, Pennsylvania 19335.					
Pennsylvania	West Brandywine (township), Chester County.	West Branch, Brandywine Creek.	At State Highway 340	None	*364
			Approximately 50 feet upstream of Hibernia Road.	None	*443
Maps available for inspection at the West Brandywine Township Building, 1199 Lafayette Road, Coatesville, Pennsylvania.					
Send comments to Mr. Thomas J. McCaffrey, Chairman for the West Brandywine Township Board of Supervisors, 1199 Lafayette Road, Coatesville, Pennsylvania 19320.					
Pennsylvania	West Chester (borough), Chester County.	Marshall Manor Tributary ..	At the downstream Limit of Study (Goshen Road).	None	*360
			Approximately 195 feet upstream of Hillside Drive South.	None	*419

State	City/town/county	Source of flooding	Location	#Depth in feet above ground. *Elevation in feet (NGVD)	
				Existing	Modified
Maps available for inspection at the Building Inspector's Office, 401 East Gay Street, West Chester, Pennsylvania.					
Send comments to Ms. Eleanor E. Loper, West Chester Borough Council President, 401 East Gay Street, West Chester, Pennsylvania 19380.					
Pennsylvania	West Grove (borough), Chester County.	Middle Branch White Clay Creek.	Approximately 150 feet downstream of Valley Road.	None	*372
			Approximately 50 feet upstream of Valley Road.	None	*373
Maps available for inspection at the West Grove Borough Building, 117 Rose Hill Avenue, West Grove, Pennsylvania.					
Send comments to Mr. Charles I. Sensenig, President of the West Grove Borough Council, 245 West Evergreen Street, West Grove, Pennsylvania 19390.					
Pennsylvania	West Marlborough (township), Chester County.	Buck Run	At upstream side of State Route 82	None	*326
			Approximately 1,700 feet downstream of Buck Run Road.	None	*358
Maps available for inspection at the Township Building, Doe Run Road, Route 82, Village of Doe Run, Pennsylvania.					
Send comments to Mr. Charles C. Brosius, Chairman of the West Marlborough Township Board of Supervisors, R.D. 8, Box 317, Coatesville, Pennsylvania 19320.					
Pennsylvania	West Sadsbury (township), Chester County.	Pine Creek No. 2	At confluence with East Branch Octoraro Creek and Williams Run.	None	*464
			Approximately 575 feet upstream of Zion Hill Road.	None	*483
		East Branch	Just downstream of State Route 372	None	*458
		Octoraro Creek	At confluence with Pine Creek and Williams Run.	None	*464
		Officers Run	Approximately 150 feet upstream of State Route 41.	None	*461
			Approximately 350 feet downstream of CONRAIL bridge.	None	*474
		Valley Creek No. 3	Approximately 175 feet upstream of State Route 41.	None	*461
Maps available for inspection at the West Sadsbury Township Building, Moscow Road, Parkesburg, Pennsylvania.					
Send comments to Mr. James Landis, Chairman of the West Sadsbury Board of Supervisors, R.D. 2, Township Building, Parkesburg, Pennsylvania19365.					
Pennsylvania	West Whiteland (township), Chester County.	West Fork of East Branch Chester Creek.	At upstream side of Street Road	*263	*258
			Approximately 150 feet downstream of Westbourne Road.	*263	*262
Maps available for inspection at the West Whiteland Township Building, 222 N. Pottstown Pike, Exton, Pennsylvania.					
Send comments to Mr. Stephen J. Ross, West Whiteland Township Manager, P.O. Box 210, 222 N. Pottstown Pike, Exton, Pennsylvania 19341.					
Pennsylvania	Willistown (township), Chester County.	East Branch, Ridley Creek	Approximately 500 feet upstream of Warrior Road.	None	*437
			Approximately 0.2 mile upstream of Warrior Road.	None	*445
Maps available for inspection at the Willistown Township Municipal Building, 688 Sugartown Road, Malvern, Pennsylvania.					
Send comments to Mr. William A. Rosenberry, Willistown Township Manager, 688 Sugartown Road, Malvern, Pennsylvania 19355.					
Tennessee	Johnson City (city), Washington County.	Brush Creek	Approximately 280 feet upstream of the confluence with Watauga River.	*1,404	*1,406
			Approximately 1,725 feet upstream of Clinchfield Railroad.	*1,689	*1,690
		Knob Creek	Approximately 75 feet downstream of Sewage Treatment Plant Road.	*1,410	*1,409
			At the upstream side of Denny Mill Road	None	*1,574

State	City/town/county	Source of flooding	Location	#Depth in feet above ground. *Elevation in feet (NGVD)	
				Existing	Modified
		Sinking Creek	Approximately 1,800 feet downstream of Dave Buck Road.	*1,550	*1,552
			Approximately 500 feet upstream of Sinking Creek Road.	*1,845	*1,844
		Twin Falls Branch	At confluence with Knob Creek	*1,472	*1,473
			Approximately 620 feet upstream of Oakland Avenue.	None	*1,473
Maps available for inspection at the Johnson City Engineer's Office, City Garage Road and Water Street, Johnson City, Tennessee.					
Send comments to The Honorable Jeff Anderson, Mayor of the City of Johnson City, P.O. 2150, Johnson City, Tennessee 37605.					
Tennessee	Washington County (unincorporated areas).	Brush Creek	Approximately 600 feet upstream of Breached Dam.	*1,476	*1,481
			Approximately 300 feet upstream of Farm Bridge.	*1,551	*1,550
		Knob Creek	Approximately 1,500 feet downstream of Sewage Treatment Plant Road.	*1,385	*1,387
			Approximately 1,600 feet upstream of Knob Creek Road.	None	*1,604
		Sinking Creek	Approximately 200 feet upstream of Clinchfield Railroad.	*1,721	*1,722
			Approximately 0.5 mile upstream of New Lone Oak Road.	*1,937	*1,938
Maps available for inspection at the Washington County Zoning Administrator's Office, Washington County Courthouse, Jonesborough, Tennessee.					
Send comments to Mr. George Jaynes, Washington County Executive, P.O. Box 219, Jonesborough, Tennessee 37659					
Wisconsin	Dane County Unincorporated Areas.	Badger Mill Creek	Approximately 500 feet upstream of confluence with the Sugar River.	*921	*922
			Approximately 0.67 mile upstream of Nesbitt Road.	*971	*972
		Dry Tributary to Badger Mill Creek.	At the confluence with Badger Mill Creek	None	*930
			Approximately 0.32 mile upstream of Edward Street.	None	*976
		East Branch Badger Mill Creek.	At confluence with Badger Mill Creek	*971	*972
			Approximately 0.25 mile upstream of the confluence with Badger Mill Creek.	*978	*979
		Badger Mill Creek Diversion Channel.	At confluence with Badger Mill Creek	*950	*951
			At divergence from Badger Mill Creek	*955	*957
Maps available for inspection at the City/County Building, 210 Martin Luther King, Jr., Boulevard, Room 116, Madison, Wisconsin.					
Send comments to Mr. Richard Phelps, Dane County Executive, 210 Martin Luther King, Jr., Boulevard, Room 421, Madison, Wisconsin 53709.					
Wisconsin	Washburn County Unincorporated Areas.	Red Cedar Lake	Entire shoreline with county	None	*1,189
		Bear Lake	Entire shoreline with county	None	*1,222
		Trego Lake	Entire shoreline with county	None	*1,036
		Matthews Lake	Entire shoreline with county	None	*995
		Spooner Lake	Entire shoreline with county	None	*1,093
Maps available for inspection at the Washburn County Zoning Administration, 110 West 4th Avenue, Shell Lake, Wisconsin.					
Send comments to Mr. Hubert Smith, Chairman of the Washburn County Board of Supervisors, 110 West 4th Avenue, Shell Lake, Wisconsin 54871.					

(Catalog of Federal Domestic Assistance No. 83.100, *Food Insurance.'')

Dated: June 22, 1995.

Richard T. Moore,

Associate Director for Mitigation.

[FR Doc. 95–16414 Filed 7–3–95; 8:45 am]

BILLING CODE 6718–03–P–M

FEDERAL COMMUNICATIONS COMMISSION

47 CFR Part 73

[MM Docket No. 95–90; FCC 95–226]

Broadcast Services; Network/Affiliate Rule; Advertising

AGENCY: Federal Communications Commission.

ACTION: Notice of proposed rulemaking.

SUMMARY: This Notice of Proposed Rulemaking proposes to re-examine the Commission's rules prohibiting a broadcast television licensee from entering into agreements with a network that limits the licensee's ability to alter its advertising rates and from being represented for the sale of advertising by a network with which it is affiliated. This action is needed to determine if the costs of these rules exceed their benefits.

DATES: Comments are due by August 28, 1995, and reply comments are due by September 27, 1995.

ADDRESSES: Federal Communications Commission, Washington, DC 20554.

FOR FURTHER INFORMATION CONTACT: Paul Gordon (202–776–1653) or Tracy Waldon (202–739–0769), Mass Media Bureau.

SUPPLEMENTARY INFORMATION: This a synopsis of the Commission's *Notice of Proposed Rule Making* in MM Docket No. 95–90, adopted June 14, 1995 and released June 14, 1995. The complete text of this *NPRM* is available for inspection and copying during normal business hours in the FCC Reference Center (Room 239), 1919 M Street, N.W. Washington, D.C., and also may be purchased from the Commission's copy contractor, International Transcription Service, (202) 857–3800, 2100 M Street, N.W., Suite 140, Washington, DC 20037.

Synopsis of Notice of Proposed Rule Making

1. With this *Notice of Proposed Rule Making (NPRM),* the Commission continues its reexamination of the rules regulating broadcast television network/affiliate relationships in light of changes in the video marketplace. This *NPRM* takes a fresh look at 47 CFR 73.658 (h) and (i) (the Commission's ''network control of station advertising rates'' rule and the ''network advertising representation'' rule, respectively). Section 73.658(h) prohibits agreements by which a network can influence or control the rates its affiliates set for the sale of their non-network broadcast time, and Section 73.658(i) prohibits broadcast television affiliates that are not owned by their networks from being represented by their networks for the sale of non-network advertising time. Both rules address station relationships with any broadcast television network, *i.e.,* any organization that provides and identical program to be broadcast simultaneously by two or more stations.

2. In reconsidering these rules, our central focus is on whether they continue to effectively serve this Commission's cornerstone interests of promoting diversity and competition. In this *NPRM,* after first reviewing the initial premises for these rules, we will look at the changes in the competitive environment over the years since the rules were adopted, and we will consider the current marketplace in which they operate. We will inquire whether networks would have the capability and the incentive to exercise undue market or bargaining power in the absence of these rules and will examine public interest

3. The network rules governing control of station rates and network advertising representation were originally adopted to protect the ability of affiliates to serve as viable, independent sources of programming, and to foster competition in the provision of advertising. As the Commission stated in 1941, ''[c]ompetition between stations in the same community inures to the public good because only by attracting and holding listeners can a broadcast station successfully compete for advertisers. Competition for advertisers[,] which means competition for listeners[,] necessarily results in rivalry between stations to broadcast programs calculated to attract and hold listeners, which necessarily results in the improvement of the quality of their program service. This is the essence of the American system of broadcasting.''[1] The Commission still believes, fifty years later, that healthy and vigorously competitive television advertising markets are in the public interest.

4. Having discussed why network influence over national spot advertising rates implicates our public interest concerns, we turn to the practical questions of whether networks, under current market conditions, have the ability to exercise this influence, and whether they would choose to exercise it. The first question asks the degree to which a network could pressure its affiliates to act in a manner that benefits the network, but which may not be in the best interests of either the public or the licensee. The second question asks whether a network, even if it had such power, would have any incentive to exercise it. Finally, we request comment on whether the existing rules effectively perform their functions and whether elimination or modification of the rules would serve the public interest.

5. The public interest may be harmed if networks possess sufficient bargaining power over their affiliates such that exercise of this bargaining power would result in reductions of affiliate advertising revenues significant enough to inhibit the affiliate's ability to present programming that best serves its community. In order to assess whether networks today have a substantial degree of bargaining power with respect to their affiliates, we must define the relevant alternatives available to the two parties. To the extent that an affiliate has alternative opportunities to affiliate with a given network, network bargaining power could be reduced. In the same manner, it is also presumed that the more potential affiliates in a market, the more bargaining power the network will have.

6. We ask parties to comment on whether, and if so the extent to which, the balance of bargaining power has shifted toward affiliates in the years since these advertising rules were promulgated, and what effect the current balance of bargaining power has on our related public interest concerns of diversity and competition.

7. Even if a network has undue bargaining power over its affiliates, it may not have the incentive or ability to exercise that bargaining power to influence national video advertising rates in a way that would harm the public interest. Presumably, a network would find it in its interest to manipulate the national spot advertising rates of its affiliates only if it could earn higher profits by doing so. Whether a network could profit form this activity depends on the availability of other sources of advertising time to which advertisers can turn that are ''reasonably interchangeable'' with network advertising time. Understanding the goals of advertisers and the role of the national advertising representatives is critical in determining whether national spot advertisements are reasonably

[1] *Report on Chain Broadcasting,* Commission Order No. 37; Docket 5060, at 47, quoting *Spartanburg Advertising Co.,* Docket No. 5451, (January 9, 1940).

interchangeable substitutes for network advertisements. We must also consider whether there are products, in addition to national spot advertisements, that might substitute for broadcast television network advertising. If these other products provide competitive alternatives to network and national spot advertisements, the ability of a network to adversely influence rates in the national video advertising market will be substantially diminished.

8. In this regard, we propose to use the same analytical framework as in our pending television ownership proceeding.[2] In that item, we sought comment on whether the advertising time supplied by broadcast television networks, program syndicators, cable networks, and perhaps cable multiple system operators were reasonably interchangeable. We noted that the amounts of advertising time sold by other suppliers, such as direct broadcast satellite, wireless cable, or video dialtone program providers, were too small to have an appreciable effect on national broadcast advertising.

9. The *Report on Chain Broadcasting* argued that a network would exert pressure on its affiliates to raise their national spot ad rates so as to make network ads more attractive to advertisers, and thus more profitable. In this way, the network's profits would increase at the expense of its affiliates' profits. The 1980 *Network Inquiry Report*[3] argued that a network and its affiliates together had incentives to manipulate the network and national spot advertising rates so that all parties' profits increased. Under either of these scenarios, if networks or networks and their affiliates together have the incentive and the market power to manipulate national video advertising rates to their advantage, the Commission's goals of diversity and competition could be adversely affected in the absence of the rules.

10. The ability of a network or a network and its affiliates to influence national video advertising rates depends again upon the availability of reasonably interchangeable substitutes. If we were to conclude on the basis of the record that each network's advertising time competes vigorously with: (1) the advertising time of the other networks; (2) the advertising time for national spot ads sold by affiliates and independent stations; and (3) advertising time offered by syndicators and cable networks, then networks, either with or without their affiliates, will likely be unable to affect prices significantly in the national video advertising market. Under this scenario, if a network, or a network and its affiliates, were to attempt to raise their advertising rates above competitive levels, national advertisers would have several alternative suppliers to go to, and they would likely switch their patronage to these alternatives. We request comment on the ability of advertisers to switch to these alternative advertising providers and the resulting effect on station revenues. Commenters should focus on the degree to which these potential and actual competitors limit the ability of a network and/or its affiliates from profitably raising national television advertising rates above competitive levels.

11. Alternatively, if we were to conclude on the basis of the record that networks face few competitors in the national video advertising market other than each other and broadcast television stations (through national spot sales), we must still determine whether a network, or a network and its affiliates, could affect national television advertising rates in a manner that should concern us. Including only these competitors in the relevant market, we seek comment on whether any network, or a network and its affiliates acting in concert, could adversely affect national video advertising rates.

12. Finally, the record that we develop in this proceeding may indicate that network and national spot advertisements do not compete for the same advertisers. Should that be the case, changes in the rates for national spot advertisements will likely have no impact on the demand for network advertising and, consequently, no impact on network advertising rates. Such a finding would lead us to question the continued need for our advertising rules. We seek comment on what basis if any exists that would support retention of our advertising rules if we determine that network advertising time and national spot advertising time do not compete with each other for the same advertisers.

13. We also seek comment and information on the nature and extent of the services currently provided by national television advertising representatives. If general industry practice is for a television licensee to instruct the representative what rates to charge (leaving the latter no discretion to alter them), we question what harm there would be in allowing networks to represent their affiliates. On the other hand, licensees might generally provide their representatives a range of rates within which to charge advertisers, thereby giving the representatives some latitude in managing the stations' transactions. We ask whether this would facilitate the adverse consequences in the national television advertising market and the resulting public interest concerns that were previously discussed.

14. Finally, we must address the question of whether our rules effectively prevent the harms they were designed to redress. Can networks currently influence national spot advertising rates indirectly, by using mechanisms other than possible influence or control over affiliates' rates? For example, since a network currently can control the amount of national spot time its affiliates have available to sell during network programming, does this allow the network indirectly to control the affiliates' national spot rates? If we find that networks, with or without their affiliates, can easily circumvent the advertising rules, then eliminating those rules would appear to cause no additional harm.

15. Whether we repeal, modify, or retain the prohibitions on network control of station advertising rates and network representation of affiliates in the advertising market depends on the nature of the competitive advertising interrelationships among the various video program providers. Should the record indicate that neither television broadcast networks nor networks and their affiliates have the ability or incentive to manipulate the market price for network or national spot television advertising time, we would consider eliminating or modifying the rules if the record indicates that they are ineffective in correcting the public interest harm they were designed to remedy. On the other hand, should we determine that networks, or networks and their affiliates, have the ability and incentive to manipulate the market price for network or national spot television advertising time, and that these rules effectively address any resulting public interest harm, we would consider retaining the rules.

16. However, the record might indicate that we should eliminate one rule, but not the other. For example, we might determine on the basis of the record established that networks, acting as station advertising representatives, in fact have no influence over national spot rates of the stations they represent. If these representatives have no ability to affect their clients' rates, we would likely be inclined to eliminate the rule prohibiting network representation of affiliates in the national spot advertising market, even though we may wish to

[2] *Further Notice of Proposed Rule Making* in MM Docket 91–221, 60 FR 6490 (Feb 2, 1995).

[3] Network Inquiry Special Staff, *New Television Networks: Entry, Jurisdiction, Ownership and Regulation, Final Report,* (October 1990).

retain the rule prohibiting network control of station advertising rates. We ask for comment on the circumstance under which it might be appropriate to repeal one rule but retain the other.

Administrative Matters

17. Pursuant to applicable procedures set forth in Sections 1.415 and 1.419 of the Commission's Rules, 47 CFR § § 1.415 and 1.419, interested parties may file comments on or before August 28, 1995, and reply comments on or before September 27, 1995. To file formally in this proceeding, you must file an original plus four copies of all comments, reply comments, and supporting comments. If you want each Commissioner to receive a copy of your comments, you must file an original plus nine copies. You should send comments and reply comments to Office of the Secretary, Federal Communications Commission, Washington, D.C. 20554. Comments and reply comments will be available for public inspection during regular business hours in the FCC Reference Center (Room 239), 1919 M Street, N.W., Washington, D.C. 20554.

18. This is a non-restricted notice and comment rulemaking proceeding. *Ex parte* presentations are permitted, except during the Sunshine Agenda period, provided they are disclosed as provided in the Commission Rules. *See generally* 47 CFR § § 1.1202, 1.1203, and 1.1206(a).

Initial Regulatory Flexibility Analysis

19. *Reason for the Action:* This proceeding was initiated to review and update the Commission's Rules concerning network control of station advertising rates and affiliate advertising representation by networks in light of changes in the video programming industry.

20. *Objective of this Action:* This *Notice* is intended to reexamine the Commission's rules regulating broadcast television stations' sale of advertising.

21. *Legal Basis*: Authority for the actions proposed in this *Notice* may be found in Sections 4 and 303 of the Communications Act of 1934, as amended, 47 U.S.C. 154 and 303.

22. *Recording, Recordkeeping, and Other Compliance Requirements Inherent in the Proposed Rule:* None.

23. *Federal Rules that Overlap, Duplicate, or Conflict with the Proposed Rules:* None

24. *Description, Potential Impact, and Number of Small Entities Involved:* Approximately 1,500 existing television broadcasters of all sizes may be affected by the proposals contained in this decision.

25. *Any Significant Alternatives Minimizing the Impact on Small Entities and Consistent with the Stated Objectives:* The proposals contained in this *NPRM* are intended to simplify and ease the regulatory burden currently placed on commercial television broadcasters.

26. As required by Section 603 of the Regulatory Flexibility Act, the Commission has prepared the above Initial Regulatory Flexibility Analysis (IRFA) of the expected impact on small entities of the proposals suggested in this document. Written public comments are requested on the IRFA. These comments must be filed in accordance with the same filing deadlines as comments on the rest of this *Notice of Proposed Rule Making,* but they must have a separate and distinct heading designating them as responses to IRFA. The Secretary shall send a copy of this *Notice of Proposed Rule Making,* including the IRFA, to the Chief Counsel for Advocacy of the Small Business Administration in accordance with paragraph 603(a) of the Regulatory Flexibility Act. Pub. L. No. 96–354, 94 Stat. 1164, 5 U.S.C. Section 601 *et seq.* (1981).

27. This *Notice of Proposed Rule Making* is issued pursuant to authority contained in Sections 4(i) and 303 of the Communications Act of 1934, as amended, 47 U.S.C. 154(i), 303.

List of Subjects 47 CFR Part 73

Television broadcasting.

Federal Communications Commission.

William F. Caton,

Acting Secretary.

[FR Doc. 95–16374 Filed 7–3–95; 8:45 am]

BILLING CODE 6712–01–M

DEPARTMENT OF TRANSPORTATION

National Highway Traffic Safety Administration

49 CFR Part 575

[Docket No. 94–30, Notice 3]

RIN 2127–AF17

Consumer Information Regulations Uniform Tire Quality Grading Standards

AGENCY: National Highway Traffic Safety Administration (NHTSA), Department of Transportation (DOT).

ACTION: Supplemental notice of proposed rulemaking; extension of comment period; notice of public meeting.

SUMMARY: On May 24, 1995, NHTSA published a notice of proposed rulemaking (NPRM) to amend the Uniform Tire Quality Grading Standards (UTQGS). Pursuant to requests from several tire manufacturers, NHTSA announces an extension of the period for submitting written comments on the NPRM from July 10, 1995 to August 14, 1995. The agency also announces the holding of a public meeting to supplement the written comments. Finally, NHTSA proposes an additional calculation to supplement the proposed rolling resistance regression equation so that the equation can be used to calculate a specific rolling resistance coefficient.

DATES: *Public meeting and copies of oral testimony:* The public meeting will be held July 24, 1995, beginning at 9 a.m. Those wishing to make oral presentations should contact Mr. Orron Kee at the address or telephone number listed below, and submit copies of their planned testimony by July 20, 1995.

Written comments: Written comments on the May 24, 1995 NPRM and this SNPRM must be received on or before August 14, 1995.

Proposed Effective Date: If adopted, the amendments proposed in this notice would become effective one year after date of publication of the final rule in the **Federal Register**.

ADDRESSES: *Public Meeting:* The meeting will be held in Room 2230 Nassif Building, 400 Seventh Street, S.W, Washington, D.C.

Written Comments: Comments on the NPRM and SNPRM should refer to Docket No. 94–30; Not. 2 or the docket and notice number shown above, and be submitted to: Docket Section, National Highway Traffic Safety Administration, 400 Seventh Street, SW, Room 5111, Washington, DC 20590. Docket room hours are from 9:30 a.m. to 4 p.m., Monday through Friday.

Written copies of oral testimony: Written copies of oral testimony for the meeting should be provided to Mr. Orron Kee at the address below.

FOR FURTHER INFORMATION CONTACT: Mr. Orron Kee, Office of Market Incentives, Office of the Associate Administrator for Rulemaking, National Highway Traffic Safety Administration, 400 Seventh Street, SW, Room 5320, Washington, DC 20590, telephone (202) 366–0846.

SUPPLEMENTARY INFORMATION:

Background

In the May 24, 1995 **Federal Register**, NHTSA published a notice of proposed rulemaking (NPRM) to amend the Uniform Tire Quality Grading Standards (UTQGS)(49 CFR 575.104) to: Revise the

treadwear testing procedures to maintain the base course wear rate of course monitoring tires at its current value; create a new traction grade of ''AA'' in addition to the current traction grades of A, B, and C; and replace the temperature resistance grade with a rolling resistance/fuel economy grade. (60 FR 27472)

Requests for Extension of Comment Period and for Public Meeting

Subsequent to the May 1995 NPRM, NHTSA received requests for extension of the period for submitting written comments on the NPRM and for a public meeting on the NPRM from the Goodyear Tire and Rubber Company, the Kelly Springfield Tire Company, Multinational Business Services, Inc., Cooper Tire and Rubber Company, and Bridgestone/Firestone, Inc. A copy of each letter has been placed in NHTSA's docket at Docket No. 94–30, Notice 2. NHTSA has decided to grant these requests. A public meeting will be held on July 24, 1995 in Room 2230, Nassif Building, 400 Seventh Street, S.W., Washington, DC. The meeting will begin at 9 a.m. Although NHTSA wishes to hear as many views as possible, it reserves the right to limit the number of witnesses and the time allotted to each speaker. The period for submitting written comments, originally scheduled to end July 10, is extended to August 14, 1995.

Topics for Public Meeting

To focus the discussion at the public meeting, NHTSA asks those testifying at the meeting to address one or more of the following topics:

1. Effect of rolling resistance improvements on traction under each of the following conditions: wet road surface, dry road surface, and low temperatures.
2. Effect of rolling resistance improvements on cornering and handling performance.
3. Differences in the rolling resistance, traction, and handling characteristics of original equipment tires and replacement passenger car tires.
4. Costs of:

(A) Testing for rolling resistance grading instead of temperature resistance grading;

(B) Revising tire molds, tread labels, and brochures to include rolling resistance grades;

(C) Improving the rolling resistance performance of replacement tires so that it equals that of original equipment passenger cars; and

(D) Leadtime necessary before commencing to test and label tires for rolling resistance.

5. Carbon dioxide reduction and fuel economy improvement benefits from low rolling resistance tires.
6. Suggestions and supporting data for other test procedure revisions to improve treadwear test consistency and repeatability.
7. Cost of regrading tires under existing regulation when treadwear rating increases due to changes in the base course wear rate.
8. Cost of labeling for higher traction grade:

(A) Cost if that higher grade is the only change made to the UTQGS regulation; and

(B) Additional cost if higher grade is added at same time as rolling resistance grade.

Oral testimony is not limited to the topics listed above. NHTSA welcomes additional comments at the meeting on any other issue raised in the May 24, 1995 NPRM or this SNPRM to amend the UTQGS Standard.

Procedural Matters for the Public Meeting

Persons wishing to speak at the public meeting should contact Mr. Orron Kee, whose address and telephone number appear in the beginning of this notice. Please contact Mr. Kee by July 20, 1995, so that NHTSA can determine the need for any special equipment, and can make any other special arrangements. NHTSA asks that, if possible, each participant provide Mr. Kee with a copy of his or her oral presentation by July 20, 1995, and limit the presentation to 30 minutes. If the presentation will include slides, motion pictures, or other visual aids, please bring at least one copy of each such aid to the meeting so that the agency can include them in the public record.

To facilitate communication, NHTSA will provide auxiliary aids (e.g., sign language interpreter, braille materials, large print materials and/or a magnifying device) to participants as necessary, during the meeting. Any person desiring auxiliary aids should contact Ms. Barbara Carnes, NHTSA Office of Safety Performance Standards, telephone (202) 366–1810, by July 12, 1995.

If the number of requests for oral presentations exceeds the available time, NHTSA will ask prospective speakers and organizations with similar views to combine or summarize their presentations. If time permits at the end of the scheduled presentations, NHTSA will permit unscheduled speakers to make statements.

The NHTSA presiding officials at the meeting may ask questions of any speaker. Further, any attendee at the meeting may submit written questions for the agency panel, at its discretion, to address to presenters of testimony. However, there will be no opportunity for attendees to directly question any presenter of testimony.

A schedule of persons making oral presentations will be available at the designated meeting room. Please be aware that NHTSA will place a copy of any written statement provided by those persons in the docket for this notice. A verbatim transcript of the meeting will be prepared and placed in the docket as soon as possible following the hearing.

Any interested person can submit written comments on the issues set out in this notice, for inclusion in the docket. Unless a person is requesting confidential treatment for information in his or her submission, the person need not submit more than three copies of the comments. NHTSA asks however, that if possible, 10 copies be provided. Any written testimony submitted will be considered as comments to the NPRM.

Supplemental Proposal

Among the proposals in the May 24, 1995 NPRM was a proposal to replace the UTQGS' temperature resistance grade with a rolling resistance/fuel economy grade. On page 27481 of the NPRM, NHTSA explained that the substitution was proposed because NHTSA tentatively concluded that fuel economy information is more understandable and more meaningful to the tire-buying public than the temperature resistance rating. Further, adding the fuel economy grade furthers the initiatives in the Climate Change Action Plan issued by the Clinton Administration in October 1993 in a national effort to reduce greenhouse gas emissions.

NHTSA proposed to base the new fuel economy rating on a rolling resistance coefficient instead of rolling resistance itself since doing so would partially normalize rolling resistance variations by tire size within a tire line. The rolling resistance coefficient (C_r) is calculated by dividing the rolling resistance by the load on the tire when tested in accordance with SAE Recommended Practice J–1269, Rolling Resistance Measurement Procedure for Passenger Car, Light Truck, and Highway Truck and Bus Tires, revised March, 1987 (SAE J–1269). One tire manufacturer, Michelin, commented in response to the agency's April 25, 1994 Request for Comments on UTQGS that the rolling resistance coefficient ranges from 0.0073 to 0.0156, while other tire manufacturers, Goodyear, assessed the range as being between 0.0067 and

0.0152, and Standard Testing Laboratories (STL), assessed it as being between 0.005 to 0.015. (59 FR 19686)

In the NPRM, NHTSA proposed two alternative ways of calculating the tire's fuel economy based on the rolling resistance coefficient. In the final rule, one of the two alternatives may be adopted. The first method begins by using 0.010 as the midpoint of all the rolling resistance coefficient ranges suggested by Michelin, Goodyear, and STL in their comments on the April 1994 Request for Comments. The first method would rate tires with a coefficient of less than 0.010 as ''A'' for fuel economy. Tires with a coefficient of 0.010 to 0.015 would be rated ''B,'' while tires with a rolling resistance coefficient greater than 0.015 would be rated ''C.'' The first method would be consistent with the views of those commenters that stated that if a rolling resistance/fuel economy rating were established, the A, B, and C ratings would be simpler, and therefore preferable.

The second method of calculating the tire's fuel economy favors a more differentiated, quantitative expression of the amount of potential fuel savings than would be provided by a general indication as in the case of the letter ratings. For example, a tire with rolling resistance coefficient of 0.0080 would be graded as achieving a 9 percent increase in fuel savings (100(0.0150–0.0080)/(0.0150)(5)). (The number (5) in the preceding calculation represents a 5 percent change in rolling resistance.) Similarly, a tire with a rolling resistance coefficient of 0.0150 would be graded as achieving a 1 percent increase in fuel economy.) A tire with a rolling resistance coefficient of 0.0150 or greater would be graded as 0 percent, indicating no fuel savings.

After publishing the NPRM containing these two alternative calculation methods, NHTSA determined that the SAE J–1269 calculation results not in a specific coefficient, but in a regression equation that specifies the rolling resistance coefficient as a function of tire load and pressure. In order to compare different tires, a specific combination of tire load and pressure must be specified. To compare fuel economy ratings of tires, it is more meaningful to compare coefficients against coefficients, rather than (as proposed in the NPRM), equations against equations.

NHTSA therefore proposes that variables (tire load and pressure) in the SAE J–1269 equations be calculated using the test load and pressure specified for the high speed performance test in Table II of Standard No. 109 *New Pneumatic Tires* (49 CFR 571.109). That test has the same values for test load and pressure as those in the temperature resistance test presently specified in the UTQGS. NHTSA proposes to use the high speed performance test values because the values specified in Table II are close to the test points specified in SAE J–1269.

Standard No. 109's high speed performance test procedures specify a test load of 88 percent of the tire's maximum load with a pressure somewhat less than the maximum pressure, in accordance with the value provided in Table II of Standard No. 109. The pressures specified in Table II are not reduced by the same amount for the higher pressure 300, 340, and 350 kPa tires as they are for the 240 and 280 kPa tires. Stamping a tire as 300, 340, or 350 kPa signifies that the pressures are available if needed, not that the tires must be inflated to the maximum pressures. Standard load conventional tires all reach their maximum load capacity at 240 kPa or 280 kPa (for P-metric tires). Tires stamped with 300 kPa or 350 kPa maximum pressure have the same maximum load capacity as tires stamped 240 kPa maximum pressure. Standard load conventional tires stamped with 340 kPa maximum pressure have the same maximum load capacity as tires stamped 280 kPa. 300, 340 or 350 kPa-stamped tires may have an additional 60 or 110 kPa inflation pressure, when needed for specific uses.

Public comment is sought on the proposed method for calculating a specific rolling resistance coefficient using the SAE J–1269 rolling resistance regression equation. Comment is also sought whether there are alternative methods of selecting the load and pressure values to calculate a specific coefficient, using the SAE J–1269 equation.

Rulemaking Analyses and Notices

A. E.O. 12866 and DOT Regulatory Policies and Procedures

This notice has not been reviewed under E.O. 12866, Regulatory Planning and Review. The agency has considered the impact of this rulemaking action and has concluded that it is not ''significant'' under the DOT's Regulatory Policies and Procedures. The amendments proposed in this notice are intended to make the UTQGS more meaningful and helpful to consumers in selecting tires to meet their needs. Adoption of the new calculation method proposed in this notice would not inherently increase the costs, either to manufacturers or to consumers, of replacing the temperature resistance grade with the rolling resistance grade. Discussion of the impacts of the NPRM is contained in the agency's Preliminary Regulatory Evaluation, a copy of which has been placed in NHTSA's Docket No. 94–30, Notice 2.

B. Regulatory Flexibility Act

NHTSA has considered the impacts of this rulemaking action under the Regulatory Flexibility Act. I hereby certify that the proposed amendment would not have a significant economic impact on a substantial number of small entities. Accordingly, the agency has not prepared a preliminary regulatory flexibility analysis. The agency believes that no passenger car tire manufacturers qualify as small businesses. Further, as noted above, adoption of the proposed calculation method would not impose any additional costs.

C. National Environmental Policy Act

NHTSA has analyzed this rulemaking for purposes of the National Environmental Policy Act and has determined that implementation of the proposal in this document would have no significant impact on the quality of the human environment.

D. Federalism

NHTSA has analyzed this proposal in accordance with the principles and criteria contained in E.O. 12612 and has determined that the proposals in this notice do not have sufficient federalism implications to warrant preparation of a Federalism Assessment. No state laws would be affected.

E. Civil Justice Reform

The proposed amendment in this notice would not have any retroactive effect. Under 49 U.S.C. 30103(b), whenever a Federal motor vehicle safety standard is in effect, a state or political subdivision thereof may prescribe or continue in effect a standard applicable to the same aspect of performance of a motor vehicle only if the state's standard is identical to the Federal standard. However, the United States government, a state or political subdivision of a state may prescribe a standard for a motor vehicle or motor vehicle equipment obtained for its own use that imposes a higher performance requirement than that required by the Federal standard. 49 U.S.C. 30161 sets forth a procedure for judicial review of final rules establishing, amending or revoking Federal motor vehicle safety standards. A petition for reconsideration or other administrative proceedings is not required before parties may file suit in court.

Comments

Interested persons are invited to submit written comments on the amendments proposed in this rulemaking action. It is requested but not required that any comments be submitted in 10 copies.

Comments must not exceed 15 pages in length (49 CFR 553.21). This limitation is intended to encourage commenters to detail their primary arguments in concise fashion. Necessary attachments, however, may be appended to those comments without regard to the 15-page limit.

If a commenter wishes to submit certain information under a claim of confidentiality, 3 copies of the complete submission including the purportedly confidential business information should be submitted to the Chief Counsel, NHTSA at the street address shown above, and 7 copies from which the purportedly confidential information has been expunged should be submitted to the Docket Section. A request for confidentiality should be accompanied by a cover letter setting forth the information specified in 49 CFR 512, the agency's confidential business information regulation.

All comments received on or before the close of business on the comment closing date indicated above for the proposal will be considered, and will be available to the public for examination in the docket at the above address both before and after the closing date. To the extent possible, comments received too late for consideration in regard to the final rule will be considered as suggestions for further rulemaking action. Comments on the proposal will be available for public inspection in the docket. NHTSA will continue file relevant information in the docket after the closing date, and it is recommended that interested persons continue to monitor the docket for new material.

Those persons desiring to be notified upon receipt of their comments in the rules docket should enclose a self-addressed stamped postcard in the envelope with their comments. Upon receiving the comments the docket supervisor will return the postcard by mail.

List of Subjects in 49 CFR Part 575

Consumer protection, Motor vehicle safety, reporting and recordkeeping, Tires.

In consideration of the foregoing, 49 CFR Part 575 would be amended as follows;

PART 575—CONSUMER INFORMATION REGULATIONS

1. The authority citation for Part 575 would continue to read as follows:

Authority: 49 U.S.C. §§ 322, 30111, 30115, 30117, and 30166; delegation of authority at 49 CFR 1.50.

2. Section 575.104 would be amended by revising paragraph (g).

§ 575.104 Uniform tire quality grading standards.

* * * * *

[Alternative 1 to paragraph (g)]:

(g) *Fuel economy grading.* The fuel economy grade is calculated as follows:

(1) The tire's rolling resistance coefficient is determined in accordance with the procedures of SAE Recommended Practice J–1269, Rolling Resistance Measurement Procedure for Passenger Car, Light Truck, and Highway Truck and Bus Tires, revised March, 1987 (SAE J–1269). In evaluating the rolling resistance coefficient (using the regression equation from the SAE J–1269 procedure), use the load value specified in Standard No. 109 *New Pneumatic Tires* (49 CFR 571.109) for the tire and its corresponding test pressure specified in Table II of Standard No. 109, for the high speed performance test.

(2) The rolling resistance coefficient (C_r) is the ratio of rolling resistance force (F_r) to the normal load (F_n) on the tire: or

$$C_r = \frac{F_r}{F_n}$$

Example No 1: F_n = 1,100 pounds of force (lbf); F_r = 8 lbf; then

$$C_r = \frac{8}{1{,}100} = 0.00727s$$

A rolling resistance coefficient of 0.00727 would result in a grade of ''A'' for fuel economy.

Example No. 2: F_n = 1,100 lbf, and F_r = 18 lbf, then

$$C_r = \frac{18}{1{,}100} = 0.01636$$

A rolling resistance coefficient of 0.01636 would result in a grade of ''C'' for fuel economy.

[Alternative 2 to paragraph (g)]:

(g) *Fuel economy grading.* The fuel economy grade is calculated as follows:

(1) The tire's rolling resistance coefficient is determined in accordance with the procedures of SAE Recommended Practice J–1269, Rolling Resistance Measurement Procedure for Passenger Car, Light Truck, and Highway Truck and Bus Tires, revised March, 1987 (SAE J–1269). In evaluating the rolling resistance coefficient (using the regression equation from the SAE J–1269 procedure), use the load value specified in Standard No. 109 *New Pneumatic Tires* (49 CFR 571.109) for the tire and its corresponding test pressure specified in Table II of Standard No. 109 for the high speed performance test.

(2) The rolling resistance coefficient (C_r) is the ratio of rolling resistance force (F_r) to the normal load (F_n) on the tire: or

$$C_r = \frac{F_r}{F_n}.$$

Example No. 1: F_n = 1,100 pounds force (lbf); F_r = 8 lbf; then

$$C_r = \frac{8}{1{,}100} = 0.00727.$$

Example No. 2: F_n = 1,100 lbf, and F_r = 18 lbf; then

$$C_r = \frac{18}{1{,}100} = 0.01636.$$

(3) Determine the tire's fuel economy grade by subtracting its rolling resistance coefficient from 0.0150, then multiply by 1,333. The resulting number, rounded to the nearest whole number, is the fuel economy grade, expressed as a percentage.

(i)(A) Using the numbers in Example No. 1 in paragraph (g)(2) of this section, given the rolling resistance coefficient (C_r) of 0.00727, the fuel economy grade (F_g) would be calculated as follows:

F_g = (0.0150 - 0.00727) x 1,333
= (0.00773) x 1,333 = 10.30 percent, rounded to 10 percent.

(B) This would represent an increase of 10 percent in fuel economy, expressed as a fuel economy grade of ''10%''.

(ii) Using the numbers in Example No. 2 in paragraph (g)(2) of this section: If F_n = 1,100 lbf, and F_r = 18 lbf, then

F_g = (0.0150 - 0.01636) x 1,333
= (-0.00136) x 1,333 = -1.82 or 0 percent

A negative value represents a 0 percent increase in fuel economy, and would be expressed as a fuel economy grade of ''0%''.

Issued on: June 29, 1995.

Barry Felrice,

Associate Administrator for Safety Performance Standards.

[FR Doc. 95–16462 Filed 6–29–95; 4:12 pm]

BILLING CODE 4910–59–P

DEPARTMENT OF COMMERCE

National Oceanic and Atmospheric Administration

50 CFR Part 635

[I.D. 061995A]

Mid-Atlantic Fishery Management Council; Public Hearings

AGENCY: National Marine Fisheries Service (NMFS), National Oceanic and Atmospheric Administration (NOAA), Commerce.

ACTION: Public hearings.

SUMMARY: The Mid-Atlantic Fishery Management Council (Council) will hold eight public hearings to allow for input on the proposed Fishery Management Plan for the Scup Fishery (FMP).

DATES: Written comments will be accepted until July 24, 1995. The hearings will be held during the month of July. See **SUPPLEMENTARY INFORMATION** for time and dates of the hearings.

ADDRESSES: Send comments to David R. Keifer, Executive Director, Mid-Atlantic Fishery Management Council, Room 2115 Federal Building, 300 South New Street, Dover, DE 19904–6790. The public hearings will be held in Maryland, Virginia, Rhode Island, North Carolina, New Jersey, Massachusetts, and New York. See **SUPPLEMENTARY INFORMATION** for the locations of the hearings.

FOR FURTHER INFORMATION CONTACT: David R. Keifer, (302) 674–2331; fax (302) 674–5399.

SUPPLEMENTARY INFORMATION: The Council has adopted the following management measures for this FMP for purposes of public hearings:

Years 1 and 2

1. A 9–inch (22.9–cm) total length (TL) minimum fish size in the commercial fishery in Federal and state waters.

2. A 7–inch (17.8–cm) TL minimum fish size in the recreational fishery in Federal waters (the exclusive economic zone) with the states setting the recreational size limit in state waters. The Atlantic States Marine Fisheries Commission has proposed a 7–inch (17.8–cm) TL size limit in state waters from New Jersey to North Carolina and an 8–inch (20.3–cm) TL size limit in state waters from New York to Maine.

Years 3 and Subsequent

Prior to year 3 and annually thereafter, the Council, working through a Monitoring Committee, would evaluate the success of the FMP relative to the overfishing reduction goal and propose adjustments to the management system. Beginning with year 3, additional measures would be implemented by the Director, Northeast Region, NMFS, based on the recommendations of the Council. Additional management measures could be any or all of the following:

For the Commercial Fishery

1. A 9–inch (22.9–cm) TL minimum fish size.

2. A 4.5–inch (11.4–cm) minimum mesh size for vessels retaining more than 1,000 lb (0.45 mt) of scup. The minimum mesh size would be established on a framework basis.

3. A coastwide quota with Federal permit holders being prohibited from landing (selling) after the quota has been attained. Quota overruns would be deducted from the quota for the subsequent year. All states would need to prohibit scup sales following Federal sales prohibition.

For the Recreational Fishery

1. An 8–inch (20.3–cm) minimum fish size, which may be adjusted annually through framework action.

2. A possession limit, which may be adjusted annually through framework action.

3. An open season in the recreational fishery, which may be adjusted annually through framework action.

4. A coastwide recreational harvest limit. Landings in excess of the limit would be deducted from the harvest limit for the subsequent year.

For All Years

1. Operator permits for commercial and party and charter boats.

2. Vessel permits for party and charter boats.

3. Vessel permits for commercial vessels (permits to sell) under a moratorium on entry. Vessels with documented landings of scup for sale between January 26, 1988, and January 26, 1993, qualify for a moratorium permit to land and sell scup under this moratorium program.

4. Dealer permits (permits to purchase).

5. Permitted vessels may only sell to permitted dealers and permitted dealers may only buy from permitted vessels.

6. Party and charter boat, commercial vessel, and dealer reports.

7. The hinges and fasteners of one panel or door in scup pots or traps must be made of one of the following degradable materials:

a. Untreated hemp, jute, or cotton string of 3/16–inch (0.32–cm) diameter or smaller;

b. Magnesium alloy, timed float releases (pop-up devices) or similar magnesium alloy fasteners; or

c. Ungalvanized or uncoated iron wire of 0.062–inch (0.16–cm) diameter or smaller.

8. Scup pots and traps would be required to have a minimum escape vent of 2.75 inches (7.0 cm) in diameter.

9. A maximum size of 18 inches (45.7 cm) in diameter for rollers used in roller rig trawl gear.

All public hearings are scheduled to begin at 7 p.m., except the New York hearings, which are scheduled to begin at 7:30 p.m. All hearings will be tape recorded and the tapes will be filed as the official transcript of the hearings. The hearings will be held at the following locations:

1. July 10, 1995—Holiday Inn, Route 13, Salisbury, MD.

2. July 17, 1995—Days Inn, 5807 Northampton Boulevard, Virginia Beach, VA.

3. July 17, 1995—Newport Harbor and Marina, Newport, RI.

4. July 18, 1995—North Carolina State Aquarium, Airport Road, Manteo, NC.

5. July 18, 1995—Holiday Inn, 290 Highway 37 East, Toms River, NJ.

6. July 18, 1995—Days Inn, 500 Hathaway Road, I–95 and 140, New Bedford, MA.

7. July 19, 1995—Ramada Inn, Exit 72, Long Island Expressway, Riverhead, NY.

8. July 24, 1995—Kingsborough Community College, Manhattan Beach, NY.

These hearings are physically accessible to people with disabilities. Requests for sign language interpretation or other auxiliary aids should be directed to Joanna Davis at 302–674–2331 at least 5 days prior to the hearing dates.

Dated: June 27, 1995.

Richard W. Surdi,

Acting Director, Office of Fisheries Conservation and Management, National Marine Fisheries Service.

[FR Doc. 95–16333 Filed 7–3–95; 8:45 am]

BILLING CODE 3510–22–F

Notices

Federal Register

Vol. 60, No. 128

Wednesday, July 5, 1995

This section of the FEDERAL REGISTER contains documents other than rules or proposed rules that are applicable to the public. Notices of hearings and investigations, committee meetings, agency decisions and rulings, delegations of authority, filing of petitions and applications and agency statements of organization and functions are examples of documents appearing in this section.

ADMINISTRATIVE CONFERENCE OF THE UNITED STATES

Special Committee to Review the Government in the Sunshine Act and Committee on Adjudication; Notice of Public Meetings

SUMMARY: Pursuant to the Federal Advisory Committee Act (Pub. L. No. 92–463), notice is hereby given of meetings of the Special Committee to Review the Government in the Sunshine Act and the Committee on Adjudication of the Administrative Conference of the United States.

AGENCY: Special Committee to Review the Government in the Sunshine Act.

DATE: Monday, July 17, 1995, at 2 p.m.

LOCATION: Office of the Chairman, Administrative Conference, 2120 L Street NW., Suite 500, Washington, DC (Library, 5th Floor), Washington, DC.

FOR FURTHER INFORMATION CONTACT: Jeffrey S. Lubbers, Office of the Chairman, Administrative Conference of the United States, 2120 L Street NW., Suite 500, Washington, DC 20037. Telephone: (202) 254–7020.

AGENCY: Committee on Adjudication.

DATES: Friday, July 21, 1995, at 9:30 a.m.

LOCATION: Office of the Chairman, Administrative Conference, 2120 L Street, NW., Suite 500, Washington, DC.

FOR FURTHER INFORMATION CONTACT: Nancy G. Miller, Office of the Chairman, Administrative Conference of the United States, 2120 L Street NW., Suite 500, Washington, DC 20037. Telephone: (202) 254–7020.

SUPPLEMENTARY INFORMATION: The meeting of the Special Committee to Review the Government in the Sunshine Act is to continue discussion concerning the need for changes in the Act. More specifically, the Committee will discuss the framing of issues and questions on which public opinion will be sought at a public hearing to be held later in the summer.

The meeting of the Committee on Adjudication is to discuss the request by the Federal Trade Commission for comments on its Rules of Practice for adjudications.

Attendance at the meetings is open to the interested public, but limited to the space available. Persons wishing to attend should notify the Office of the Chairman at least one day in advance. The chairman of each committee, if he deems it appropriate, may permit members of the public to present oral statements at the meeting. Any member of the public may file a written statement with the committee before, during, or after the meeting. Minutes of each meeting will be available on request.

Dated: June 29, 1995.

Jeffrey S. Lubbers,

Research Director.

[FR Doc. 95–16522 Filed 6–30–95; 11:02 am]

BILLING CODE 6110–01–M

DEPARTMENT OF AGRICULTURE

Grain Inspection, Packers and Stockyards Administration

Invitation to Serve on Federal Grain Inspection Service Advisory Committee

Under authority of section 20 of the United States Grain Standards Act (Act), the Secretary of Agriculture established the Federal Grain Inspection Service (FGIS) Advisory Committee (Advisory Committee) on September 29, 1981, to provide advice to the Administrator on implementation of the Act. Pub. L. 103–156 extended the authority for the Advisory Committee through the year 2000.

The Advisory Committee presently consists of 15 members, appointed by the Secretary, who represent the interests of grain producers, processors, handlers, merchandisers, consumers, and exporters, including scientists with expertise in research related to the policies in section 2 of the Act. Members of the Committee serve without compensation. They are reimbursed for travel expenses, including per diem in lieu of subsistence, for travel away from their homes or regular places of business in performance of Committee service, as authorized under section 5703 of title 5, United States Code. Alternatively, travel expenses may be paid by Committee members.

Nominations are being sought for persons to serve on the Advisory Committee to replace the five members and five alternate members whose terms expire in June 1995.

Persons interested in serving on the Advisory Committee, or in nominating individuals to serve, should contact: James R. Baker, Administrator, GIPSA, Room 1094–S, P.O. Box 96454, Washington, D.C. 20090–6454, in writing and request Form AD–755, which must be completed and submitted to the Administrator at the above address not later than September 5, 1995.

Nominations are open to all individuals without regard to race, color, religion, sex, national origin, age, mental or physical handicap, or marital status.

The final selection of Advisory Committee members and alternates will be made by the Secretary.

James R. Baker,

Administrator.

[FR Doc. 95–16286 Filed 7–3–95; 8:45 am]

BILLING CODE 3410–EM–M

Natural Resources Conservation Service

Mantachie Creek Watershed, Mississippi

AGENCY: Natural Resources Conservation Service, USDA.

ACTION: Notice of intent to deauthorize federal funding.

SUMMARY: Pursuant to the Watershed Protection and Flood Prevention Act, Public Law 83–566, and the Natural Resources Conservation Service Guidelines (7 CFR 622), the Natural Resources Conservation Service gives notice of the intent to deauthorize Federal funding for the Mantachie Creek Watershed project, Itawamba and Lee Counties, Mississippi.

FOR FURTHER INFORMATION CONTACT: Homer L. Wilkes, State Conservationist, Natural Resources Conservation Service, Suite 1321, Federal Building, 100 West Capitol Street, Jackson, Mississippi 39269, telephone 601–965–5205.

SUPPLEMENTARY INFORMATION: A determination has been made by Homer L. Wilkes that the proposed works of

improvement for the Mantachie Creek Watershed project will not be installed. The sponsoring local organizations have concurred in this determination and agree that Federal funding should be deauthorized for the project. Information regarding this determination may be obtained from Homer L. Wilkes, State Conservationist, at the address and telephone number previously shown.

No administrative action on implementation of the proposed deauthorization will be taken until 60 days after the date of this publication in the **Federal Register**.

(Catalog of Federal Domestic Assistance Program No. 904, Watershed Protection and Flood Prevention. Office of Management and Budget Circular A–95 regarding state and local clearinghouse review of Federal and federally assisted programs and projects is applicable.)

Dated: June 22, 1995.

Homer L. Wilkes,

State Conservationist.

[FR Doc. 95–16322 Filed 7–3–95; 8:45 am]

BILLING CODE 3410–01–M

DEPARTMENT OF COMMERCE

Agency Form Under Review by the Office of Management and Budget

DOC has submitted to the Office of Management and Budget (OMB) for clearance the following proposal for collection of information under the provisions of the Paperwork Reduction Act (44 U.S.C. chapter 35).

Agency: Bureau of the Census.

Title: 1996 National Content Survey.

Form Number(s): DS–1A, DS–1B, DS–1C, DS–1D, DS–1E, DS–1F, DS–1G, DS–1H, DS–1J, DS–2A, DS–2B, DS–2C, DS–2D, DS–2E, DS–2F, DS–2G.

Agency Approval Number: None.

Type of Request: New collection.

Burden: 36,556 hours.

Number of Respondents: 96,750.

Avg Hours Per Response: 23 minutes.

Needs and Uses: The Census Bureau plans to conduct the 1996 National Content Survey. This survey will play a crucial role in determining the subject content and specific question wording of the 2000 census questionnaires. In addition, the survey will provide critical information for formulating and refining decisions regarding questionnaire design, population coverage, data capture technology, and administrative records notification. The survey will also test certain race and ethnic issues. Nine self–enumeration simple–form questionnaires and seven self–enumeration sample questionnaires will be mailed to a national sample of 96,750 households. The simple–form questionnaires contain basic population and housing questions. The sample–form questionnaires contain these questions, as well as a number of more detailed questions.

Affected Public: Individuals or households.

Frequency: One–time.

Respondent's Obligation: Mandatory.

OMB Desk Officer: Maria Gonzalez, (202) 395–7313.

Copies of the above information collection proposal can be obtained by calling or writing Gerald Taché, DOC Forms Clearance Officer, (202) 482–3271, Department of Commerce, room 5312, 14th and Constitution Avenue, NW, Washington, DC 20230.

Written comments and recommendations for the proposed information collection should be sent to Maria Gonzalez, OMB Desk Officer, room 10201, New Executive Office Building, Washington, DC 20503.

Dated: June 28, 1995.

Gerald Taché,

Departmental Forms Clearance Officer, Office of Management and Organization.

[FR Doc. 95–16455 Filed 7–3–95; 8:45 am]

BILLING CODE 3510–07–F

Agency Form Under Review by the Office of Management and Budget

DOC has submitted to the Office of Management and Budget (OMB) for clearance the following proposal for collection of information under the provisions of the Paperwork Reduction Act (44 U.S.C. chapter 35).

Agency: Bureau of the Census.

Title: 1997 Census of Governments – Prelist Survey of Special Districts.

Form Number(s): G–24.

Agency Approval Number: None.

Type of Request: New collection.

Burden: 1,522 hours.

Number of Respondents: 3,043.

Avg Hours Per Response: 30 minutes.

Needs and Uses: The Census Bureau plans to conduct this survey to verify the existence of special governmental districts, obtain current addresses, and identify new districts for the 1997 Census of Governments. We will send computer listings of current special districts to officials in each of the 3,043 counties in the United States. We will ask county clerks or other officials to update the listings using the G–24 form. We need an updated list of all special governmental districts to ensure complete coverage and a minimum number of postmaster returns and remailings in subsequent phases of the 1997 Census of Governments.

Affected Public: State, local, or tribal government.

Frequency: One–time.

Respondent's Obligation: Voluntary.

OMB Desk Officer: Maria Gonzalez, (202) 395–7313.

Copies of the above information collection proposal can be obtained by calling or writing Gerald Taché, DOC Forms Clearance Officer, (202) 482–3271, Department of Commerce, room 5312, 14th and Constitution Avenue, NW, Washington, DC 20230.

Written comments and recommendations for the proposed information collection should be sent to Maria Gonzalez, OMB Desk Officer, room 10201, New Executive Office Building, Washington, DC 20503.

Dated: June 28, 1995.

Gerald Taché,

Departmental Forms Clearance Officer, Office of Management and Organization.

[FR Doc. 95–16456 Filed 7–3–95; 8:45 am]

BILLING CODE 3510–07–F

International Trade Administration

[A–122–814]

Pure Magnesium From Canada, Preliminary Results of Antidumping Duty Administrative Review

AGENCY: Import Administration, International Trade Administration, Department of Commerce.

ACTION: Notice of preliminary results of antidumping duty administrative review.

SUMMARY: The Department of Commerce (the Department) has conducted an administrative review of the antidumping duty order on pure magnesium from Canada. Interested parties are invited to comment on these preliminary results.

EFFECTIVE DATE: July 5, 1995.

FOR FURTHER INFORMATION CONTACT: Ron Trentham or Zev Primor, Office of Antidumping Compliance, Import Administration, International Trade Administration, U.S. Department of Commerce, 14th Street and Constitution Avenue, N.W., Washington, D.C. 20230; telephone (202) 482–3931 or 482–4114, respectively.

SUPPLEMENTARY INFORMATION:

Background

On August 31, 1992, the Department published in the **Federal Register** (57 FR 39399) the antidumping duty order on pure magnesium from Canada. On August 3, 1994, the Department published a notice of ''Opportunity to Request Administrative Review'' (59 FR 39543). On August 23, 1994, the petitioner, the Magnesium Corporation

of America (Magcorp), requested that we conduct an administrative review of Norsk Hydro Canada Inc. (NHCI), for the period August 1, 1993, through July 31, 1994. On August 31, 1994, NHCI, an interested party, requested that we conduct an administrative review for the same period. We published a notice of initiation of the antidumping administrative review on September 16, 1994.

The Department has now conducted the administrative review in accordance with section 751 of the Tariff Act of 1930, as amended (the Tariff Act).

Scope of the Review

The product covered by this review is pure magnesium. Pure unwrought magnesium contains at least 99.8 percent magnesium by weight and is sold in various slab and ingot forms and sizes. Granular and secondary magnesium are excluded from the scope of this review. Pure magnesium is currently classified under subheading 8104.11.0000 of the Harmonized Tariff Schedule (HTS). HTS item numbers are provided for convenience and for Customs purposes. The written description remains dispositive.

Preliminary Results of Review

The Department has preliminarily determined that the single manufacturer/exporter subject to review, NHCI, had no shipments of this merchandise to the United States during the period of review. The Department will verify this determination. Due to the need to verify information in the first administrative review, that review has not yet been completed, and, therefore, the Department has preliminarily assigned NHCI the cash deposit rate established in Pure Magnesium From Canada: Amendment of Final Determination of Sales at Less Than Fair Value and Order in Accordance With Decision on Remand, 58 FR 62643, November 29, 1993. The rate is 21 percent.

Furthermore, the following deposit requirements will be effective for all shipments of the subject merchandise, entered, or withdrawn from warehouse, for consumption on or after the publication date of the final results of this administrative review, as provided for by section 751(a)(1) of the Tariff Act: (1) The cash deposit rate for the reviewed firm will be that firm's rate established in the final results of this administrative review; (2) for previously reviewed or investigated companies not listed above, the cash deposit rate will continue to be the company-specific rate published for the most recent period; (3) if the exporter is not a firm covered in this review, or the original less-than-fair-value investigation, but the manufacturer is, the cash deposit rate will be the rate established for the most recent period for the manufacturer of the merchandise; and (4) the cash deposit rate for all other manufacturers or exporters not previously reviewed will be 21 percent, the rate established in Pure Magnesium From Canada: Amendment of Final Determination of Sales At Less Than Fair Value and Order in Accordance With Decision on Remand, 58 FR 62643, November 29, 1993.

These deposit requirements, when imposed, shall remain in effect until publication of the final results of the next administrative review.

Interested parties may request disclosure within five days of the date of publication of this notice, and may request a hearing within 10 days of the date of publication. Any hearing, if requested, will be held as early as convenient for the parties but not later than 44 days after the date of publication or the first workday thereafter. Case briefs or other written comments from interested parties may be submitted not later than 30 days after the date of publication of this notice. Rebuttal briefs and rebuttal comments, limited to issues raised in the case briefs, may be filed not later than 37 days after the date of publication. The Department will publish the final results of this administrative review, including its results of its analysis of issues raised in any such written comments.

This notice serves as a preliminary reminder to importers of their responsibility under 19 CFR 353.26 to file a certificate regarding the reimbursement of antidumping duties prior to liquidation of the relevant entries during this review period. Failure to comply with this requirement could result in the Secretary's presumption that reimbursement of antidumping duties occurred and the subsequent assessment of double antidumping duties.

This administrative review and notice are in accordance with section 751(a)(1) of the Tariff Act (19 U.S.C. 1675(a)(1)) and 19CFR 353.22.

Dated: June 28, 1995.

Paul L. Joffe,

Deputy Assistant Secretary for Import Administration.

[FR Doc. 95–16465 Filed 7–3–95; 8:45 am]

BILLING CODE 3510–DS–P

North American Free-Trade Agreement (NAFTA), Article 1904 Binational Panel Reviews; Request for Panel Review

AGENCY: NAFTA Secretariat, United States Section, International Trade Administration, Department of Commerce.

ACTION: Notice of first request for panel review.

SUMMARY: On June 26, 1995 Mitsubishi Electronics Industries Canada, Inc. filed a First Request for Panel Review with the U.S. Section of the NAFTA Secretariat pursuant to Article 1904 of the North American Free Trade Agreement. Panel review was requested of the Determination Not to Revoke Antidumping Duty Orders and Findings Nor To Terminate Suspended Investigations made by the International Trade Administration in the respecting Color Picture Tubes from Canada. This determination was published in the **Federal Register** on May 25, 1995 (60 FR 27720, 27722). The NAFTA Secretariat has assigned Case Number USA–95–1904–03 to this request.

FOR FURTHER INFORMATION CONTACT: James R. Holbein, United States Secretary, NAFTA Secretariat, Suite 2061, 14th and Constitution Avenue, Washington, D.C. 20230, (202) 482–5438.

SUPPLEMENTARY INFORMATION: Chapter 19 of the NAFTA establishes a mechanism to replace domestic judicial review of final determinations in antidumping and countervailing duty cases involving imports from a NAFTA country with review by independent binational panels. When a Request for Panel Review is filed, a panel is established to act in place of national courts to review expeditiously the final determination to determine whether it conforms with the antidumping or countervailing duty law of the country that made the determination.

Under Article 1904 of the NAFTA, which came into force on January 1, 1994, the Government of the United States, the Government of Canada and the Government of Mexico established *Rules of Procedure for Article 1904 Binational Panel Reviews* (''Rules''). These Rules were published in the **Federal Register** on February 23, 1994 (59 FR 8686). The panel review in this matter will be conducted in accordance with these Rules.

A first Request for Panel Review was filed with the U.S. Section of the NAFTA Secretariat, pursuant to Article 1904 of the NAFTA, on June 26, 1995, requesting panel review of the final determination described above.

The Rules provide that:

(a) A Party or interested person may challenge the final determination in whole or in part by filing a Complaint in accordance with Rule 39 within 30 days after the filing of the first Request for Panel Review (the deadline for filing a Complaint is July 26, 1995);

(b) A Party, investigating authority or interested person that does not file a Complaint but that intends to appear in support of any reviewable portion of the final determination may participate in the panel review by filing a Notice of Appearance in accordance with Rule 40 within 45 days after the filing of the first Request for Panel Review (the deadline for filing a Notice of Appearance is August 10, 1995); and

(c) The panel review shall be limited to the allegations of error of fact or law, including the jurisdiction of the investigating authority, that are set out in the Complaints filed in the panel review and the procedural and substantive defenses raised in the panel review.

Dated: June 28, 1995.

James R. Holbein,

U.S. Secretary, NAFTA Secretariat.

[FR Doc. 95–16458 Filed 7–3–95; 8:45 am]

BILLING CODE 3510–GT–M

National Oceanic and Atmospheric Administration

National Weather Service Transfer of Specific Products and Services to the Private Sector

AGENCY: National Weather Service, National Oceanic and Atmospheric Administration, Commerce.

ACTION: Notice.

SUMMARY: This notice publishes the National Weather Service's plan to transfer Agricultural Weather Services, Fire Weather Services to non-Federal agencies for non-wildfire activities, distribution of weather charts to marine radiofacsimile broadcast stations, and the production of the National Weather Summary to the private sector effective October 1, 1995. As part of this plan, the *Director of U.S. Private Weather Services* will be made available to ensure a smooth transfer of these products and services to the private sector.

DATES: The date this action will become effective is October 1, 1995.

ADDRESSES: Requests for copies of documents stated within this Notice as being available upon request should be sent to the National Weather Service, Industrial Meteorology Staff, 1325 East-West Highway, #18462, Silver Spring, Maryland 20910.

FOR FURTHER INFORMATION CONTACT: Edward Gross, 301–713–0258.

SUPPLEMENTARY INFORMATION: Fiscal year 1996 budget proposals include reductions in funding to the National Weather Service (NWS) which will result in the elimination of the following NWS services: Agricultural Weather Services, Fire Weather Services to non-Federal agencies for non-wildfire activities, distribution of weather charts to marine radiofacsimile broadcast stations, and the National Weather Summary. The NWS will be required to terminate products and services in these areas. This statement will notify users of those products and services that they will not be available after September 30, 1995.

The Agricultural Weather Services and Fruit Frost Programs will be eliminated entirely. The following NWS products will no longer be available from the NOAA Weather Wire Service, the Family of Services, or via the NOAA Weather Radio:

Agricultural Weather Forecast

Fruit Frost Forecast
Special Agricultural Weather Advisory
Weather Advisory for Ag Operations
Agricultural Observations
30-day Agricultural Weather Outlook
International Weather and Crop Summary
National Agricultural Weather Highlights
Agricultural Weather Guidance
Cranberry Bog Forecasts

In addition, seven NWS offices providing Agricultural Weather Services exclusively will close. These offices are:

AWSC College Station, Texas
AWSC Stoneville, Mississippi
AWSC Auburn, Alabama
AWSC West Lafayette, Indiana
WSO Yuma, Arizona
WSO Twin Falls, Idaho
WSO Riverside, California

Fire Weather Services to non-Federal agencies will be reduced. The following products and services will no longer be available to state and local fire management agencies:

Spot forecasts for prescribed burning
Spot forecasts for non-fire forest management activities (i.e., spraying, etc.)
Land Management forecasts
Transport and stability forecasts for smoke management
Consultation and liaison for non-wildfire activities

Some offices that provide Fire Weather Services exclusively or a combination of Fire Weather and Agricultural Weather Services may be closed or consolidated. Meteorological support directly related to wildfire suppression will continue to be provided to all agencies. This support includes presuppression forecasts, National Fire Danger Rating System forecasts, fire weather watches, red flag warnings, incident response, and fire weather training for fire fighters.

Currently, the NWS issues marine weather charts and transmits them to six marine radio stations for scheduled broadcast via radiofacsimile over frequencies in the maritime mobile radio spectrum. After September 30, 1995, the NWS will cease transmitting weather charts to the six marine radio stations (station operator noted in parentheses), as follows:

NMF—Marshfield, Massachusetts (U.S. Coast Guard)
NMC—Pt. Reyes, California (U.S. Coast Guard)
NOJ—Kodiak, Alaska (U.S. Coast Guard)
WLO—Mobile, Alabama (Mobile Marine Radio, Inc.)
KVM70—Honolulu, Hawaii (Federal Aviation Administration)
WLC—Rogers City, Michigan (Central Radio, Inc.)

The NWS will continue issuing the marine weather charts in conjunction with U.S. obligations under the International Convention for Safety of Life at Sea. Private-sector vendors (including the private marine radio stations WLO and WLC listed above) may access the charts from the NWS at no cost to the Government and disseminate them to the maritime community via radiofacsimile broadcast or other methods.

The U.S. Navy broadcasts weather charts (produced by Naval meteorological echelons) from Cutler, Maine, (NAM); Pearl Harbor, Hawaii, (NPM); and Guam (NPN). Although intended for fleet support, these broadcasts are accessible by civilian users over open radio frequencies. These broadcasts will continue beyond October 1, 1995, as plans for conversion to encrypted fleet broadcasts have been delayed.

The NWS will also cease production of the National Weather Summary.

In order to ensure a smooth transfer of these products and services to the private sector, the *Directory of U.S. Private Weather Services* has been published. The Directory is intended as information with no implied endorsements. Requests for further information can be addressed directly to the individuals or companies. The names, addresses, and phone numbers in the Directory represent an initial compilation of private-sector

meteorologists, as well as private weather service companies that provide commercial agricultural weather services and basic forecasting services which could also serve the needs of the non-Federal wildfire area community. The American Meteorological Society, the National Weather Association, and the Commercial Weather Services Association provided private-sector individuals and companies from their respective memberships. This Directory will be updated in the coming months as new listings and corrections are received and may be obtained from the address above.

Dated: July 28, 1995.

Elbert W. Friday, Jr.,

Assistant Administrator for Weather Services.

[FR Doc. 95–16376 Filed 7–3–95; 8:45 am]

BILLING CODE 3510–12–M

Agency Form Under Review by the Office of Management and Budget

DOC has submitted to the Office of Management and Budget (OMB) for clearance the following proposal for collection of information under the provisions of the Paperwork Reduction Act (44 U.S.C. chapter 35).

Agency: Bureau of the Census.

Title: 1996 New York City Housing and Vacancy Survey.

Form Number(s): H–100, H–105, H–108, H–100(L), H–100(L)A.

Agency Approval Number: 0607–0757.

Type of Request: Reinstatement, without change.

Burden: 8,767 hours.

Number of Respondents: 18,200.

Avg Hours Per Response: 26 minutes.

Needs and Uses: The Census Bureau will conduct this survey for the New York City Department of Housing Preservation and Development. New York Law requires a survey every 3 years to determine the supply, condition, and vacancy rate of housing in the city. The city will use the results of the survey to develop programs and policies that aim to improve housing conditions.

Affected Public: Individuals or households, businesses or other for–profit organizations.

Frequency: One–time.

Respondent's Obligation: Voluntary.

OMB Desk Officer: Maria Gonzalez, (202) 395–7313.

Copies of the above information collection proposal can be obtained by calling or writing Gerald Taché, DOC Forms Clearance Officer, (202) 482–3271, Department of Commerce, Room 5312, 14th and Constitution Avenue, NW, Washington, DC 20230.

Written comments and recommendations for the proposed information collection should be sent to Maria Gonzalez, OMB Desk Officer, Room 10201, New Executive Office Building, Washington, DC 20503.

Dated: June 28, 1995.

Gerald Taché,

Departmental Forms Clearance Officer, Office of Management and Organization.

[FR Doc. 95–16457 Filed 7–3–95; 8:45 am]

BILLING CODE 3510–07–F

COMMITTEE FOR THE IMPLEMENTATION OF TEXTILE AGREEMENTS

Announcing Settlement on an Import Limit and a Guaranteed Access Level for Certain Cotton and Man-Made Fiber Textile Products Produced or Manufactured in Jamaica

June 28, 1995.

AGENCY: Committee for the Implementation of Textile Agreements (CITA).

ACTION: Issuing a directive to the Commissioner of Customs establishing a limit and announcing a Guaranteed Access Level.

EFFECTIVE DATE: July 5, 1995.

FOR FURTHER INFORMATION CONTACT: Naomi Freeman, International Trade Specialist, Office of Textiles and Apparel, U.S. Department of Commerce, (202) 482–4212. For information on the quota status of this limit, refer to the Quota Status Reports posted on the bulletin boards of each Customs port or call (202) 927–5850. For information on embargoes and quota re-openings, call (202) 482–3715. For information on categories on which consultations have been requested, call (202) 482-3740.

SUPPLEMENTARY INFORMATION:

Authority: Executive Order 11651 of March 3, 1972, as amended; section 204 of the Agricultural Act of 1956, as amended (7 U.S.C. 1854).

In a Memorandum of Understanding (MOU) dated June 20, 1995, the Governments of the United States and Jamaica agreed, pursuant to Article 6 of the Uruguay Round Agreement on Textiles and Clothing (ATC), to establish a limit for cotton and man-made fiber pajamas and nightwear in Categories 351/651 for a three year term—March 27, 1995 through December 31, 1995; January 1, 1996 through December 31, 1996; January 1, 1997 through December 31, 1997; January 1, 1998 through March 26, 1998. The governments also agreed to establish a Guaranteed Access Level for Categories for the periods January 1, 1996 through December 31, 1996; January 1, 1997 through December 31, 1997; and January 1, 1998 through March 26, 1998.

Beginning on July 5, 1995, the U.S. Customs Service will start signing the first section of the form ITA–370P for shipments of U.S. formed and cut parts in Categories 351/651 that are destined for Jamaica and subject to the GAL established for Categories 351/651 for the period beginning on January 1, 1996 and extending through December 31, 1996. These products are governed by Harmonized Tariff item number 9802.00.8015 and chapter 61 Statistical Note 5 and chapter 62 Statistical Note 3 of the Harmonized Tariff Schedule. Interested parties should be aware that shipments of cut parts in Categories 351/651 must be accompanied by a form ITA–370P, signed by a U.S. Customs officer, prior to export from the United States for assembly in Jamaica in order to qualify for entry under the Special Access Program.

In the letter published below, the Chairman of CITA directs the Commissioner of Customs to establish a limit for Categories 351/651 for the period beginning on March 27, 1995 and extending through December 31, 1995 and to begin signing the first section of form ITA–370P.

A description of the textile and apparel categories in terms of HTS numbers is available in the CORRELATION: Textile and Apparel Categories with the Harmonized Tariff Schedule of the United States (see **Federal Register** notice 59 FR 65531, published on December 20, 1994). Also see 59 FR 62717, published on December 6, 1994; and 60 FR 19893, published on April 21, 1995.

The letter to the Commissioner of Customs and the actions taken pursuant to it are not designed to implement all of the provisions of the Uruguay Round Agreements Act and the Uruguay Round Agreement on Textiles and Clothing, but are designed to assist only in the implementation of certain of their provisions.

Rita D. Hayes,

Chairman, Committee for the Implementation of Textile Agreements.

Committee for the Implementation of Textile Agreements

June 28, 1995.

Commissioner of Customs,
Department of the Treasury, Washington, DC 20229.

Dear Commissioner: This directive amends, but does not cancel, the directive issued to you on November 29, 1994, as amended on March 30, 1995, by the Chairman, Committee for the Implementation

of Textile Agreements. That directive concerns imports of cotton, wool, man-made fiber and other vegetable fiber textiles and textile products, produced or manufactured in Jamaica and exported during the twelve-month period beginning on January 1, 1995 and extending through December 31, 1995.

Effective on July 5, 1995, you are directed, pursuant to the Memorandum of Understanding dated June 20, 1995 between the Governments of the United States and Jamaica, the Uruguay Round Agreements Act and the Uruguay Round Agreement on Textiles and Clothing, to establish a limit for textile products in Categories 351/651 at a level of 500,000 dozen [1] for the period beginning on March 27, 1995 and extending through December 31, 1995.

Textile products in Categories 351/651 which have been exported to the United States prior to March 27, 1995 shall not be subject to this directive.

Textile products in Categories 351/651 which have been released from the custody of the U.S. Customs Service under the provisions of 19 U.S.C. 1448(b) or 1484(a)(1) prior to the effective date of this directive shall not be denied entry under this directive.

Import charges will be provided at a later date.

Beginning on July 5, 1995, the U.S. Customs Service is directed to start signing the first section of the form ITA–370P for shipments of U.S. formed and cut parts in Categories 351/651 that are destined for Jamaica and re-exported to the United States on or after January 1, 1996.

In carrying out the above directions, the Commissioner of Customs should construe entry into the United States for consumption to include entry for consumption into the Commonwealth of Puerto Rico.

The Committee for the Implementation of Textile Agreements has determined that these actions fall within the foreign affairs exception of the rulemaking provisions of 5 U.S.C. 553(a)(1).

Sincerely,

Rita D. Hayes,

Chairman, Committee for the Implementation of Textile Agreements.

[FR Doc. 95–16464 Filed 7–3–95; 8:45 am]

BILLING CODE 3510–DR–F

[1] The limit has not been adjusted to account for any imports exported after March 26, 1995.

Adjustment of Import Limits for Certain Cotton and Wool Textile Products Produced or Manufactured in the Republic of Korea

June 28, 1995.

AGENCY: Committee for the Implementation of Textile Agreements (CITA).

ACTION: Issuing a directive to the Commissioner of Customs reducing limits.

EFFECTIVE DATE: July 5, 1995.

FOR FURTHER INFORMATION CONTACT: Ross Arnold, International Trade Specialist, Office of Textiles and Apparel, U.S. Department of Commerce, (202) 482–4212. For information on the quota status of these limits, refer to the Quota Status Reports posted on the bulletin boards of each Customs port or call (202) 927–6707. For information on embargoes and quota re-openings, call (202) 482–3715.

SUPPLEMENTARY INFORMATION:

Authority: Executive Order 11651 of March 3, 1972, as amended; section 204 of the Agricultural Act of 1956, as amended (7 U.S.C. 1854).

The current limits for Categories 338/339 and 435 are being reduced for carryforward used in 1994. Additional deductions may be made later in the year if import data show that more carryforward has been used.

A description of the textile and apparel categories in terms of HTS numbers is available in the CORRELATION: Textile and Apparel Categories with the Harmonized Tariff Schedule of the United States (see **Federal Register** notice 59 FR 65531, published on December 20, 1994). Also see 60 FR 17328, published on April 5, 1995.

The letter to the Commissioner of Customs and the actions taken pursuant to it are not designed to implement all of the provisions of the Uruguay Round Agreements Act and the Uruguay Round Agreement on Textiles and Clothing, but are designed to assist only in the implementation of certain of their provisions.

Rita D. Hayes,

Chairman, Committee for the Implementation of Textile Agreements.

Committee for the Implementation of Textile Agreements

June 28, 1995.

Commissioner of Customs,
Department of the Treasury, Washington, DC 20229.

Dear Commissioner: This directive amends, but does not cancel, the directive issued to you on March 30, 1995, by the Chairman, Committee for the Implementation of Textile Agreements. That directive concerns imports of certain cotton, wool, man-made fiber, silk blend and other vegetable fiber textile products, produced or manufactured in the Republic of Korea and exported during the twelve-month period which began on January 1, 1995 and extends through December 31, 1995.

Effective on July 5, 1995, you are directed to amend the directive dated March 30, 1995 to reduce the limits for the following categories, as provided under the Uruguay Round Agreements Act and the Uruguay Round Agreement on Textiles and Clothing:

Category	Adjusted twelve-month limit [1]
Sublevels within Group II	
338/339	1,118,980 dozen.
435	33,290 dozen.

[1] The limits have not been adjusted to account for any imports exported after December 31, 1994.

The Committee for the Implementation of Textile Agreements has determined that these actions fall within the foreign affairs exception to the rulemaking provisions of 5 U.S.C. 553(a)(1).

Sincerely,

Rita D. Hayes,

Chairman, Committee for the Implementation of Textile Agreements.

[FR Doc. 95–16463 Filed 7–3–95; 8:45 am]

BILLING CODE 3510–DR–F

Adjustment of Import Limits for Certain Wool Textile Products Produced or Manufactured in Romania

June 28, 1995.

AGENCY: Committee for the Implementation of Textile Agreements (CITA).

ACTION: Issuing a directive to the Commissioner of Customs adjusting limits.

EFFECTIVE DATE: July 7, 1995.

FOR FURTHER INFORMATION CONTACT: Anne Novak, International Trade Specialist, Office of Textiles and Apparel, U.S. Department of Commerce, (202) 482–4212. For information on the quota status of these limits, refer to the Quota Status Reports posted on the bulletin boards of each Customs port or call (202) 927–6718. For information on embargoes and quota re-openings, call (202) 482–3715.

SUPPLEMENTARY INFORMATION:

Authority: Executive Order 11651 of March 3, 1972, as amended; section 204 of the Agricultural Act of 1956, as amended (7 U.S.C. 1854).

The current limits for certain categories are being adjusted, variously, for swing, special shift and carryover.

A description of the textile and apparel categories in terms of HTS numbers is available in the CORRELATION: Textile and Apparel Categories with the Harmonized Tariff Schedule of the United States (see **Federal Register** notice 59 FR 65531, published on December 20, 1994). Also see 60 FR 20969, published on April 28, 1995.

The letter to the Commissioner of Customs and the actions taken pursuant

to it are not designed to implement all of the provisions of the bilateral agreement, but are designed to assist only in the implementation of certain of its provisions.

Rita D. Hayes,

Chairman, Committee for the Implementation of Textile Agreements.

Committee for the Implementation of Textile Agreements

June 28, 1995.

Commissioner of Customs,
Department of the Treasury, Washington, DC 20229.

Dear Commissioner: This directive amends, but does not cancel, the directive issued to you on April 24, 1995, by the Chairman, Committee for the Implementation of Textile Agreements. That directive concerns imports of certain cotton, wool, man-made fiber, silk blend and other vegetable fiber textiles and textile products, produced or manufactured in Romania and exported during the twelve-month period beginning on January 1, 1995 and extending through December 31, 1995.

Effective on July 7, 1995, you are directed to amend the directive dated April 24, 1995 to adjust the limits for the following categories, as provided under the terms of the current bilateral agreement between the Governments of the United States and the Romania:

Category	Adjusted twelve-month limit [1]
Sublevels in Group III	
433/434	8,301 dozen.
435	9,205 dozen.
442	12,888 dozen.
443	104,798 numbers.
444	28,450 numbers.
447/448	27,472 dozen.

[1] The limits have not been adjusted to account for any imports exported after December 31, 1994.

The Committee for the Implementation of Textile Agreements has determined that these actions fall within the foreign affairs exception to the rulemaking provisions of 5 U.S.C. 553(a)(1).

Sincerely,

Rita D. Hayes,

Chairman, Committee for the Implementation of Textile Agreements.

[FR Doc. 95–16460 Filed 7–3–95; 8:45 am]

BILLING CODE 3510–DR–F

Adjustment of Import Limits for Certain Cotton, Wool and Man-Made Fiber Textile Products Produced or Manufactured in Taiwan

June 28, 1995.

AGENCY: Committee for the Implementation of Textile Agreements (CITA).

ACTION: Issuing a directive to the Commissioner of Customs increasing limits.

EFFECTIVE DATE: July 5, 1995.

FOR FURTHER INFORMATION CONTACT: Jennifer Aldrich, International Trade Specialist, Office of Textiles and Apparel, U.S. Department of Commerce, (202) 482–4212. For information on the quota status of these limits, refer to the Quota Status Reports posted on the bulletin boards of each Customs port or call (202) 927–6719. For information on embargoes and quota re-openings, call (202) 482–3715.

SUPPLEMENTARY INFORMATION:

Authority: Executive Order 11651 of March 3, 1972, as amended; section 204 of the Agricultural Act of 1956, as amended (7 U.S.C. 1854).

The current limits for certain categories are being increased by application of swing.

A description of the textile and apparel categories in terms of HTS numbers is available in the CORRELATION: Textile and Apparel Categories with the Harmonized Tariff Schedule of the United States (see **Federal Register** notice 59 FR 65531, published on December 20, 1994). Also see 59 FR 66297, published on December 23, 1994.

The letter to the Commissioner of Customs and the actions taken pursuant to it are not designed to implement all of the provisions of the bilateral agreement, but are designed to assist only in the implementation of certain of its provisions.

Rita D. Hayes,

Chairman, Committee for the Implementation of Textile Agreements.

Committee for the Implementation of Textile Agreements

June 28, 1995.

Commissioner of Customs,
Department of the Treasury, Washington, DC 20229.

Dear Commissioner: This directive amends, but does not cancel, the directive issued to you on December 19, 1994, by the Chairman, Committee for the Implementation of Textile Agreements. That directive concerns imports of certain cotton, wool, man-made fiber, silk blend and other vegetable fiber textiles and textile products, produced or manufactured in Taiwan and exported during the twelve-month period which began on January 1, 1995 and extends through December 31, 1995.

Effective on July 5, 1995, you are directed to amend further the December 19, 1994 directive to adjust the limits for the following categories, as provided under the terms of the current bilateral textile agreement concerning textile products from Taiwan:

Category	Twelve-month limit [1]
Within Group I Subgroup	
604	228,576 kilograms.
Sublevels in Group II	
347/348	1,294,577 dozen of which not more than 1,128,827 dozen shall be in Categories 347–W/348–W [2].
435	25,597 dozen.
443	43,054 numbers.
444	61,317 numbers.
445/446	140,081 dozen.
633/634/635	1,645,547 dozen of which not more than 945,237 dozen shall be in Categories 633/634 and not more than 858,578 dozen shall be in Category 635.
642	831,532 dozen.
647/648	5,571,721 dozen.
Within Group II Subgroup	
447/448	21,013 dozen.

[1] The limits have not been adjusted to account for any imports exported after December 31, 1994.

[2] Category 347–W: only HTS numbers 6203.19.1020, 6203.19.9020, 6203.22.3020, 6203.22.3030, 6203.42.4005, 6203.42.4010, 6203.42.4015, 6203.42.4025, 6203.42.4035, 6203.42.4045, 6203.42.4050, 6203.42.4060, 6203.49.8020, 6210.40.9033, 6211.20.1520, 6211.20.3810 and 6211.32.0040; Category 348–W: only HTS numbers 6204.12.0030, 6204.19.8030, 6204.22.3040, 6204.22.3050, 6204.29.4034, 6204.62.3000, 6204.62.4005, 6204.62.4010, 6204.62.4020, 6204.62.4030, 6204.62.4040, 6204.62.4050, 6204.62.4055, 6204.62.4065, 6204.69.6010, 6204.69.9010, 6210.50.9060, 6211.20.1550, 6211.20.6810, 6211.42.0030 and 6217.90.9050.

The Committee for the Implementation of Textile Agreements has determined that these actions fall within the foreign affairs exception to the rulemaking provisions of 5 U.S.C. 553(a)(1).

Sincerely,

Rita D. Hayes,

Chairman, Committee for the Implementation of Textile Agreements.

[FR Doc. 95–16461 Filed 7–3–95; 8:45 am]

BILLING CODE 3510–DR–F

Denial of Participation in the Special Access Program

June 28, 1995.

AGENCY: Committee for the Implementation of Textile Agreements (CITA).

ACTION: Issuing a directive to the Commissioner of Customs denying the right to participate in the Special Access Program.

EFFECTIVE DATE: July 1, 1995.

FOR FURTHER INFORMATION CONTACT: Lori E. Goldberg, International Trade Specialist, Office of Textiles and Apparel, U.S. Department of Commerce, (202) 482–3400.

SUPPLEMENTARY INFORMATION:

Authority: Executive Order 11651 of March 3, 1972, as amended; section 204 of the Agricultural Act of 1956, as amended (7 U.S.C. 1854).

The Committee for the Implementation of Textile Agreements (CITA) has determined that Block Industries is in violation of the requirements set forth for participation in the Special Access Program.

In the letter published below, the Chairman of CITA directs the Commissioner of Customs, effective on July 1, 1995, to deny Block Industries the right to participate in the Special Access Program, for a period of one year, from July 1, 1995 through June 30, 1996.

Requirements for participation in the Special Access Program are available in **Federal Register** notices 51 FR 21208, published on June 11, 1986; 52 FR 26057, published on July 10, 1987; and 54 FR 50425, published on December 6, 1989.

Rita D. Hayes,

Chairman, Committee for the Implementation of Textile Agreements.

Committee for the Implementation of Textile Agreements

June 28, 1995.

Commissioner of Customs,
Department of the Treasury, Washington, DC 20229.

Dear Commissioner: The purpose of this directive is to notify you that the Committee for the Implementation of Textile Agreements has determined that Block Industries is in violation of the requirements for participation in the Special Access Program.

Effective on July 1, 1995, you are directed to prohibit Block Industries from further participation in the Special Access Program, for a period of one year, from July 1, 1995 through June 30, 1996. For the period July 1, 1995 through June 30, 1996, goods accompanied by Form ITA–370P which are presented to U.S. Customs for entry under the Special Access Program will not be accepted. In addition, for the period July 1, 1995 through June 30, 1996, you are directed not to sign ITA–370P forms for export of U.S.-formed and cut fabric for Block Industries.

Sincerely,

Rita D. Hayes,

Chairman, Committee for the Implementation of Textile Agreements.

[FR Doc. 95–16459 Filed 7–3–95; 8:45 am]

BILLING CODE 3510–DR–F

DEPARTMENT OF DEFENSE

Department of the Navy

Notice of Availability of Invention of Licensing

The invention listed below is assigned to the United States Government as represented by the Secretary of the Navy and is available for licensing by the Department of the Navy.

Patent Application Serial No. 08/394,522: Pharmaceutical composition of Escherichia Coli Heat-Labile Enterotoxin Adjuvant and methods of use.

Requests for copies of the patent application cited should be directed to the Office of Naval Research, ONR OOCC, Ballston Tower One, 800 North Quincy Street, Arlington, Virginia 22217–5660 and must include the application serial number.

For further information contact: Mr. R.J. Erickson, Staff Patent Attorney, Office of Naval Research, ONR OOCC, 800 North Quincy Street, Arlington, Virginia 22217–5660, telephone (703) 696–4001.

Dated: June 20, 1995.

M.D. Schetzsle,

Lt, JAGC, USNR, Alternate Federal Register Liaison Officer.

[FR Doc. 95–16324 Filed 7–3–95; 8:45 am]

BILLING CODE 3810–FF–M

Naval Research Advisory Committee; Closed Meeting

Pursuant to the provisions of the Federal Advisory Committee Act (5 U.S.C. App. 2), notice is hereby given that the Naval Research Advisory Committee will meet on July 17 through 21, and July 24 through 28, 1995, at the Naval Command, Control and Ocean Surveillance Center, Research, Development, Test and Evaluation Division, San Diego, California. The session on July 17 will commence at 8:30 a.m. and terminate at 5 p.m.; the sessions on July 18 through 21, and July 24 through 27, 1995, will commence at 8 a.m. and terminate at 5 p.m.; and the session on July 28, 1995 will commence at 8:30 a.m. and terminate at 11 a.m. All sessions of these meetings will be closed to the public.

The purpose of these meetings is to discuss basic and advanced research. All sessions of the meetings will be devoted to briefings, discussions and technical examination of information on force structure and ship concepts as they relate to reduced manning initiatives, and the impact of science and technology on life cycle cost initiatives of current Department of the Navy systems and projected acquisition programs. Premature public disclosure of this information would be likely to significantly frustrate implementation of proposed policy actions by the Department of the Navy. The information involved is specifically authorized by Executive order to be withheld from the public if the agency determines it to be in their best interest. It therefore is appropriate that all sessions of the meetings be closed to the general public. The agency protected information to be discussed is so inextricably intertwined with unclassified matters as to preclude opening any portion of the meetings. Accordingly, the Secretary of the Navy has determined in writing that the public interest requires that all sessions of the meetings be closed to the public because they will be concerned with matters listed in section 552b(c)(9) (B) of title 5, United States Code.

For further information concerning these meetings contact: Ms. Diane Mason-Muir, Office of Naval Research, 800 North Quincy Street, Arlington, VA 22217–5660, telephone number: (703) 696–4870.

Dated June 23, 1995.

L. R. McNees

LCDR, JAGC, USN, Federal Register Liaison, Officer.

[FR Doc. 95–16327 Filed 7–3–95; 8:45 am]

BILLING CODE 3810–FF–P

Intent to Grant Partially Exclusive Patent License; Pelagic Pressure Systems

The Department of the Navy hereby gives notice of its intent to grant to Pelagic Pressure Systems, a revocable, nonassignable, partially exclusive license in the United States and certain foreign countries to practice the Government owned invention described in U.S. Patent No. 5,363,298, ''Controlled Risk Decompression Meter,'' issued 8 November 1994.

Anyone wishing to object to the grant of this license has 60 days from the date of this notice to file written objections along with supporting evidence, if any. Written objections are to be filed with the Office of Naval Research, ONR OOCC, Ballston Tower One, 800 North Quincy Street, Arlington, Virginia 22217–5660.

For further information contact: Mr. R. J. Erickson, Staff Patent Attorney, Office of Naval Research, ONR OOCC, Ballston Tower One, 800 North Quincy Street, Arlington, Virginia 22217–5660, telephone (703) 696–4001.

Dated: June 20, 1995.

M.D. Schetzsle,

Lt, JAGC, USNR, Alternate Federal Register Liaison Officer.

[FR Doc. 95–16326 Filed 7–3–95; 8:45 am]

BILLING CODE 3810–FF–M

Intent to Grant Exclusive Patent License; StateWide Technology Group

The Department of the Navy hereby gives notice of its intent to grant to StateWide Technology Group, a revocable, nonassignable, exclusive license in the United States to practice the Government owned invention described in U.S. Patent No. 5,119,500, ''Meteor Burst Communication System,'' issued 2 June 1992.

Anyone wishing to object to the grant of this license has 60 days from the date of this notice to file written objections along with supporting evidence, if any. Written objections are to be filed with the Office of Naval Research ONR OOCC, Ballston Tower One, 800 North Quincy Street, Arlington, Virginia 22217–5660.

For further information contact: Mr. R.J. Erickson, Staff Patent Attorney, Office of Naval Research, ONR OOCC, Ballston Tower One, 800 North Quincy Street, Arlington, Virginia 22217–5660, telephone (703) 696–4001.

Dated: June 20, 1995.

M.D. Schetzsle,

LT, JAGC, USNR, Alternate Federal Register Liaison Officer.

[FR Doc. 95–16325 Filed 7–3–95; 8:45 am]

BILLING CODE 3810–FF–M

DEPARTMENT OF EDUCATION

Notice of Proposed Information Collection Requests

AGENCY: Department of Education.

ACTION: Notice of proposed information collection requests.

SUMMARY: The Director, Information Resources Group, invites comments on proposed information collection requests as required by the Paperwork Reduction Act of 1980.

DATES: An expedited review has been requested in accordance with the Act, since allowing for the normal review period would adversely affect the public interest. Approval by the Office of Management and Budget (OMB) has been requested by June 30, 1995.

ADDRESSES: Written comments should be addressed to the Office of Information and Regulatory Affairs, Attention: Dan Chenok, Desk Officer, Department of Education, Office of Management and Budget, 725 17th Street NW., Room 3208, New Executive Office Building, Washington, DC 20503. Requests for copies of the proposed information collection request should be addressed to Patrick J. Sherrill, Department of Education, 400 Maryland Avenue, SW., Room 5624, Regional Office Building 3, Washington, DC 20202–4651.

FOR FURTHER INFORMATION CONTACT: Partick J. Sherrill, (202) 708–9915. Individuals who use a telecommunications device for the deaf (TDD) may call the Federal Information Relay Service (FIRS) at 1–800–877–8339 between 8 a.m. and 8 p.m., Eastern time, Monday through Friday.

SUPPLEMENTARY INFORMATION: Section 3517 of the Paperwork Reduction Act of 1980 (44 U.S.C. Chapter 3517) requires that the Director of OMB provide interested Federal agencies and persons and early opportunity to comment on information collection requests. OMB may amend or waive the requirement for public consultation to the extent that public participation in the approval process would defeat the purpose of the information collection, violate State or Federal law, or substantially interfere with any agency's ability to perform its statutory obligations.

The Director, Information Resources Group, publishes this notice with the attached proposed information collection request prior to submission of this request to OMB. This notice contains the following information: (1) Type of review requested, e.g., expedited; (2) Title; (3) Abstract; (4) Additional Information; (5) Frequency of collection; (6) Affected public; and (7) Reporting and/or Recordkeeping burden. Because an expedited review has been requested, a description of the information to be collected is also included as an attachment to this notice.

Dated: June 29, 1995.

Gloria Parker,

Director, Information Resources Group.

Office of the Under Secretary

Type of Review: Expedited
Title: Waivers Under Goals 2000 Educate American Act, ESES, & School-To-Work
Abstract: The information collection is necessary to provide guidance to schools, LEAs and SEAs, on submission of requests for waiver of statutory and regulatory requirements.
Additional Information: OMB approval is requested for June 30, 1995. An expedited review is request in order to obtain clearance under the Paperwork Reduction Act as soon as possible.
Frequency; One time
Affected Public: State, Local or Tribal government
Reporting Burden:
Responses: 150
Burden Hours: 3,000
Recordkeeping Burden:
Recordkeepers: 0
Burden Hours: 0

[FR Doc. 95–16364 Filed 7–3–95; 8:45 am]

BILLING CODE 4000–01–M

Notice of Proposed Information Collection Requests

AGENCY: Department of Education.

ACTION: Notice of proposed information collection requests.

SUMMARY: The Director, Information Resources Group, invites comments on proposed information collection requests as required by the Paperwork Reduction Act of 1980.

DATES: An expedited review has been requested in accordance with the Act, since allowing for the normal review period would adversely affect the public interest. Approval by the Office of Management and Budget (OMB) has been requested by July 7, 1995.

ADDRESSES: Written comments should be addressed to the Office of Information and Regulatory Affairs, Attention: Dan Chenok, Desk Officer, Department of Education, Office of Management and Budget, 725 17th Street NW., Room 3208, New Executive Office Building, Washington, DC 20503. Requests for copies of the proposed information collection request should be addressed to Patrick J. Sherrill, Department of Education, 600 Independence Avenue, SW., Room 5624, Regional Office Building 3, Washington, DC 20202–4651.

FOR FURTHER INFORMATION CONTACT: Patrick J. Sherrill, (202) 708–9915. Individuals who use a telecommunications device for the deaf (TDD) may call the Federal Information Relay Service (FIRS) at 1–800–877–8339 between 8 a.m. and 8 p.m., Eastern time, Monday through Friday.

SUPPLEMENTARY INFORMATION: Section 3517 of the Paperwork Reduction Act of 1980 (44 U.S.C. Chapter 3517) requires that the Director of OMB provide interested Federal agencies and persons an early opportunity to comment on information collection requests. OMB may amend or waive the requirement for public consultation to the extent that public participation in the approval process would defeat the purpose of the

information collection, violate State or Federal law, or substantially interfere with any agency's ability to perform its statutory obligations.

The Director, Information Resources Group, publishes this notice with the attached proposed information collection request prior to submission of this request to OMB. This notice contains the following information: (1) Type of review requested, e.g., expedited; (2) Title; (3) Abstract; (4) Additional Information; (5) Frequency of collection; (6) Affected public; and (7) Reporting and/or Recordkeeping burden. Because an expedited review has been requested, a description of the information to be collected is also included as an attachment to this section.

Dated: June 29, 1995.

Gloria Parker,

Director, Information Resources Group.

Office of Postsecondary Education

Type of Review: Expedited
Title: Quality Assurance Workbook
Frequency: Semi-Annually
Affected Public: Individuals or households; business or other for-profit; not for profit institutions; and federal government
Reporting Burden:
Responses: 400
Burden Hours: 80,000
Recordkeeping Burden:
Recordkeepers: 0
Burden Hours: 0

Abstract: The Workbook tasks will be completed by institutions who participate in the Quality Assurance Program. The institutions will establish quality assurance programs, monitor their own variance rates, and design and implement quality improvements to reduce those variance rates. These respondents will receive training in July 1995 and will be expected to begin conducting these activities immediately following training. Copies of these forms for review and comment can be obtained by calling the Performance and Accountability Improvement Staff at (202) 260–4788.

Additional Information: Clearance for this information collection is requested by July 7, 1995. An expedited review is requested in order to meet the schedule for the training in July 1995. Without the expedited review, the Department would not be able to provide the needed services and assistance to our customers who participate in the Quality Assurance Program.

[FR Doc. 95–16365 Filed 7–3–95; 8:45 am]

BILLING CODE 4000–01–M

Notice of Proposed Information Collection Requests

AGENCY: Department of Education.

ACTION: Notice of proposed information collection requests.

SUMMARY: The Director, Information Resources Group, invites comments on the proposed information collection requests as required by the Paperwork Reduction Act of 1980.

DATES: Interested persons are invited to submit comments on or before August 4, 1995.

ADDRESSES: Written comments should be addressed to the Office of Information and Regulatory Affairs, Attention: Dan Chenok: Desk Officer, Department of Education, Office of Management and Budget, 725 17th Street, NW., Room 3208, New Executive Office Building, Washington, DC 20503. Requests for copies of the proposed information collection requests should be addressed to Patrick J. Sherrill, Department of Education, 600 Independence Avenue, S.W., Room 5624, Regional Office Building 3, Washington, DC 20202–4651.

FOR FURTHER INFORMATION CONTACT: Patrick J. Sherrill (202) 708–9915. Individuals who use a telecommunications device for the deaf (TDD) may call the Federal Information Relay Service (FIRS) at 1–800–877–8339 between 8 a.m. and 8 p.m., Eastern time, Monday through Friday.

SUPPLEMENTARY INFORMATION: Section 3517 of the Paperwork Reduction Act of 1980 (44 U.S.C. Chapter 35) requires that the Office of Management and Budget (OMB) provide interested Federal agencies and the public an early opportunity to comment on information collection requests. OMB may amend or waive the requirement for public consultation to the extent that public participation in the approval process would defeat the purpose of the information collection, violate State or Federal law, or substantially interfere with any agency's ability to perform its statutory obligations. The Director of the Information Resources Group, publishes this notice containing proposed information collection requests prior to submission of these requests to OMB. Each proposed information collection, grouped by office, contains the following: (1) Type of review requested, e.g., new, revision, extension, existing or reinstatement; (2) Title; (3) Frequency of collection; (4) The affected public; (5) Reporting burden; and/or (6) Recordkeeping burden; and (7) Abstract. OMB invites public comment at the address specified above. Copies of the requests are available from Patrick J. Sherrill at the address specified above.

Dated: June 29, 1995.

Gloria Parker,

Director, Information Resources Group.

Office of Chief Financial Officer

Type of Review: Extension
Title: Education Department General Administrative Regulations
Frequency: One time
Affected Public: Business or other for-profit; Not for Profit Institution; State, Local or Tribal Government
Reporting Burden:
Responses: 30,000; Burden Hours: 525,000
Recordkeeping Burden:
Recordkeepers: 0; Burden Hours: 0

Abstract: These regulations provide for uniform requirements for the administration and monitoring of direct and State-administered grants awarded by the Department of Education. Consistent with the goals of the Government Performance and Results Act and the specific recommendations of the National Performance Review, these regulations implemented the Department's Reinvention Coordinating Council's new policy to streamline the non-competing continuation award process for discretionary grant programs.

Office of Post Secondary Education

Type of Review: New
Title: National Early Intervention Scholarship and Partnership (NEISP) Annual Performance Report
Frequency: Annually
Affected Public: State, Local or Tribal Government
Reporting Burden:
Responses: 30,000; Burden Hours: 525,000
Recordkeeping Burden:
Recordkeepers: 0; Burden Hours: 0

Abstract: State agencies use this performance report to account for the yearly program under the NEISP Program. The Department uses the information collected to assess the accomplishment of the program goals and objectives and to aid in program management and compliance assurance.

[FR Doc. 95–16366 Filed 7–3–95; 8:45 am]

BILLING CODE 4000–01–M

Notice of Proposed Information Collection Request

AGENCY: Department of Education.

ACTION: Notice of proposed information collection request.

SUMMARY: The Director, Information Resources Group, invites comments on the proposed information collection request as required by the Paperwork Reduction Act of 1980.

DATES: An emergency review has been requested in accordance with the Act, since allowing for the normal review period would adversely affect the public interest. Approval by the Office of Management and Budget (OMB) has been requested by June 30, 1995.

ADDRESSES: Written comments should be addressed to the Office of Information and Regulatory Affairs, Attention: Dan Chenok, Desk Officer: Department of Education, Office of Management and Budget, 726 Jackson Place, NW., Room 3208, New Executive Office Building, Washington, D.C. 20503. Requests for copies of the proposed information collection request should be addressed to Patrick J. Sherrill, Department of Education, 7th & D Streets, S.W., Room 5624, Regional Office Building 3, Washington, D.C. 20202–4651.

FOR FURTHER INFORMATION CONTACT: Patrick J. Sherrill (202) 708–9915. Individuals who use a telecommunications device for the deaf (TDD) may call the Federal Information Relay Service (FIRS) at 1–800–877–8339 between 8 a.m. and 8 p.m., Eastern time, Monday through Friday.

SUPPLEMENTARY INFORMATION: Section 3517 of the Paperwork Reduction Act of 1980 (44 U.S.C. Chapter 3517) requires that the Director of OMB provide interested Federal agencies and persons an early opportunity to comment on information collection requests. OMB may amend or waive the requirement for public consultation to the extent that public participation in the approval process would defeat the purpose of the information collection, violate State of Federal law, or substantially interfere with any agency's ability to perform its statutory obligations. The Director, Information Resources Group, publishes this notice with attached proposed information collection requests prior to submission to OMB. For each proposed information collection request, grouped by office, this notice contains the following information: (1) Type of review requested, e.g., new, revision, extension, existing, or reinstatement; (2) Title; (3) Frequency of collection; (4) The affected public; (5) Reporting and/or Recordkeeping burden; and (6) Abstract. Because an emergency review is requested, the additional information to be requested in this collection is included in the section on ''Additional Information'' in this notice.

Dated: June 29, 1995.

Gloria Parker,

Director, Information Resources Group.

Office of Chief Financial Officer

Type of Review: Expedited
Title: Generic Discretionary Grant Performance Report
Frequency: One Time
Affected Public: Business or other for-profit; Not for profit institutions; State, Local or Tribal Government
Reporting Burden:
Responses: 6000; Burden Hours: 12,000
Recordkeeping Burden:
Recordkeepers: 0; Burden Hours: 0

Abstract: This discretionary grant performance report form will be used by recipients of discretionary grants to receive a continuation award. An annual performance report is used to establish that the grant recipient has made substantial progress toward meeting their project objectives.

Additional Information: Clearance for this information collection is requested by June 30, 1995. An expedited review is requested in order to have adequate lead time to provide forms, instructions, and to handle inquiries about the new requirements.

[FR Doc. 95–16367 Filed 7–3–95; 8:45 am]

BILLING CODE 4000–01–M

DEPARTMENT OF ENERGY

Federal Energy Regulatory Commission

[Docket No. RP95–352–000]

Algonquin Gas Transmission Company; Notice of Proposed Changes in FERC Gas Tariff

June 28, 1995.

Take notice that on June 23, 1995, Algonquin Gas Transmission Company (Algonquin) tendered for filing as part of its FERC Gas Tariff, Fourth Revised Volume No. 1 the following revised tariff sheets, effective July 23, 1995:

Twenty-third Revised Sheet No. 20A Original Sheet No. 93B

Algonquin States that the purpose of this filing is to flow through $25,392.09 of take-or-pay charges and carrying charges billed to Algonquin by National Fuel Supply Corporation (National Fuel), on May 12, 1995.

Algonquin further states that copies of this filing were mailed to all affected customers of Algonquin and interested state commissions.

Any person desiring to be heard or to protest said filing should file a motion to intervene or protest with the Federal Energy Regulatory Commission, 825 North Capitol Street, N.E., Washington, DC 20426, in accordance with 18 CFR Sections 385.214 and 385.211 of the Commission's Rules of Practice and Procedure. All such motions or protests should be filed on or before July 6, 1995. Protests will be considered by the Commission in determining the appropriate action to be taken, but will not serve to make protestants parties to the proceeding. Any person wishing to become a party must file a motion to intervene. Copies of this filing are on file with the Commission and are available for public inspection in the Public Reference room.

Lois D. Cashell,

Secretary.

[FR Doc. 95–16343 Filed 7–3–95; 8:45 am]

BILLING CODE 6717–01–M

Mississippi River Transmission Corporation; Notice of Proposed Changes in FERC Gas Tariff

[Docket No. RP95–353–000]

June 28, 1995.

Take notice that on June 23, 1995, Mississippi River Transmission Corporation (MRT) tendered for filing to become part of its FERC Gas Tariff, Third Revised Volume No. 1, the following tariff sheets, with a proposed effective date of July 1, 1995:

Eleventh Revised Sheet No. 5
Eleventh Revised Sheet No. 6

MRT states that the purpose of this filing is to adjust its rates to reflect additional Gas Supply Realignment Costs (GSRC) of $2,178,706, plus applicable interest, pursuant to Section 16.3 of the General Terms and Conditions of MRT's Tariff. MRT states that its filing includes the ''Price Differential'' cost of continuing to perform under certain gas supply contracts during the months of January through March 1995 and GSRC Buyout/Buydown costs incurred during the period December, 1994 through June 14, 1995.

MRT states that copies of its filing have been mailed to all of its affected customers and the State Commissions of Arkansas, Missouri and Illinois.

Any person desiring to be heard or protest the subject filing should file a motion to intervene or protest with the Federal Energy Regulatory Commission, 825 North Capitol Street, N.E., Washington, D.C. 20426, in accordance with Sections 385.211 and 385.214 of the Commission's Rules of Practice and Procedure: 18 CFR 385.211 and 385.214. All such motions and protests should be

filed on or before July 6, 1995. Protests will be considered by the Commission in determining the appropriate action to be taken, but will not serve to make protestants parties to the proceeding. Any person wishing to become a party must file a motion to intervene. Copies of this filing are on file with the Commission and available for public inspection.

Lois D. Cashell,

Secretary.

[FR Doc. 95–16342 Filed 7–3–95; 8:45 am]

BILLING CODE 6717–01–M

Mississippi River Transmission Corporation; Notice of Compliance Filing

[Docket No. RP95–287–001]

June 28, 1995.

Take notice that on June 22, 1995, Mississippi River Transmission Corporation (MRT), submitted for filing to become part of its FERC Gas Tariff, Third Revised Volume No. 1, the following tariff sheets listed below to be effective July 10, 1995:

Second Revised Sheet No. 167
Second Revised Sheet No. 169
Second Revised Sheet No. 170

MRT states that the purpose of this filing is to comply with the Commission's June 8, 1995 order by revising the tariff language on Sheet Nos. 167, 169 and 170 to conform with Order No. 577–A issued by the Commission on May 31, 1995.

MRT states that a copy of the filing has been mailed to each of its customers and the State Commissions of Arkansas, Missouri and Illinois.

Any person desiring to protest the subject filing should file a protest with the Federal Energy Regulatory Commission, 825 North Capitol Street, N.E., Washington, D.C. 20426, in accordance with Rule 211 of the Commission's Rules of Practice and Procedure (18 CFR 385.211). All such protests should be filed on or before July 6, 1995. Protests will be considered by the Commission in determining the appropriate action to be taken, but will not serve to make protestants parties to the proceeding. Copies of this filing are on file with the Commission and available for public inspection.

Lois D. Cashell,

Secretary.

[FR Doc. 95–16346 Filed 7–3–95; 8:45 am]

BILLING CODE 6717–01–M

[Docket Nos. RP95–326–000 and RP95–242–000]

Natural Gas Pipeline Company of America; Notice of Technical Conference

June 28, 1995.

Take notice that a conference has been scheduled in the above-captioned proceeding for 10:00 a.m. on July 13, 1995, in a room to be designated at the offices of the Federal Energy Regulatory Commission, 810 First Street NE., Washington, DC 20426. If necessary, the conference will continue on July 14, 1995. The purpose of this conference is to address the issues set for technical conference by the Commission's order issued in this proceeding on June 26, 1995. All interested persons and staff are permitted to attend.

Lois D. Cashell,

Secretary.

[FR Doc. 95–16344 Filed 7–3–95; 8:45 am]

BILLING CODE 6717–01–M

[Docket No. RP95–351–000]

Northwest Pipeline Corporation; Notice of Proposed Change in FERC Gas Tariff

June 28, 1995.

Take notice that on June 22, 1995, Northwest Pipeline Corporation (Northwest), tendered for filing and acceptance as part of its FERC Gas Tariff, Third Revised Volume No. 1, the following tariff sheet with a proposed effective date of July 10, 1995:

Third Revised Sheet No. 265

Northwest states that the purpose of this filing is to propose changes to Section 22.3(a) of the Capacity Release provisions contained in Northwest's General Terms and Conditions of its FERC Gas Tariff. These changes are necessary to conform Northwest's Tariff with the capacity release changes made in the Commission's Order No. 577–A in Docket No. RM95–5–001. Northwest states that the change will permit parties to execute capacity releases of up to 31 days without complying with the Commission's advance posting and bidding requirements.

Northwest states that a copy of this filing has been served upon Northwest's jurisdictional customers and interested state regulatory commissions.

Any person desiring to be heard or protest said filing should file a motion to intervene or protest with the Federal Energy Regulatory Commission, 825 North Capitol Street NE., Washington, DC 20426, in accordance with Sections 385.214 and 385.211 of the Commission's Rules of Practice and Procedure. All such motions or protests should be filed on or before July 6, 1995. Protests will be considered by the Commission in determining the appropriate action to be taken, but will not serve to make protestants parties to the proceeding. Any person wishing to become a party must file a motion to intervene. Copies of this filing are on file with the Commission and are available for public inspection in the Public Reference Room.

Lois D. Cashell,

Secretary.

[FR Doc. 95–16345 Filed 7–3–95; 8:45 am]

BILLING CODE 6717–01–M

[Docket No. RP95–6–004]

Northwest Pipeline Corporation; Notice of Compliance Filing

June 28, 1995.

Take notice that on June 23, 1995, Northwest Pipeline Corporation (Northwest) tendered for filing as part of its FERC Gas Tariff, Third Revised Volume No. 1, the following tariff sheets with a proposed effective date of November 6, 1994:

Second Substitute Third Revised Sheet No. 232
Third Substitute Original Sheet No. 232–A
Third Substitute Original Sheet No. 232–B
Second Substitute Original Sheet No. 232–C
Second Substitute Original Sheet No. 232–D
Original Sheet No. 232–E
First Revised Sheet No. 237–C
First Revised Sheet No. 238

Northwest states that the purpose of this filing is to comply with the Commission's Order on Technical Conference (''Order''), pertaining to operational flow orders (''OFOs''), issued on June 8, 1995 in Docket No. RP95–6. This Order directs Northwest to make specified revisions to Northwest's March 1, 1995 pro forma tariff sheets submitted in this proceeding.

Northwest states that a copy of this filing has been served upon all intervenors in Docket No. RP95–6 and upon relevant state regulatory commissions.

Any person desiring to protest said filing should file a protest with the Federal Energy Regulatory Commission, 825 North Capitol Street, N.E., Washington, DC 20426, in accordance with Section 385.211 of the commission's rules of Practice and Procedure. All such protests should be filed on or before July 6, 1995. Protests will be considered by the Commission in determining the appropriate action to be taken, but will not serve to make protestants parties to the proceeding.

Copies of this filing are on file with the Commission and are available for public inspection in the Public Reference Room.

Lois D. Cashell,

Secretary.

[FR Doc. 95–16347 Filed 7–3–95; 8:45 am]

BILLING CODE 6717–01–M

[Docket No. RP95–354–000]

Ozark Gas Transmission System; Notice of Proposed Changes in FERC Gas Tariff

June 28, 1995.

Take notice that on June 22, 1995, Ozark Gas Transmission System (Ozark), tendered for filing as part of its FERC Gas Tariff, First Revised Volume No. 1, the following revised tariff sheets with a proposed effective date of July 10, 1995:

Second Revised Sheet No. 20
Second Revised Sheet No. 21

Ozark states that the proposed tariff sheets revise the capacity release provisions of Ozark's tariff to comply with the revisions promulgated by Order Nos. 577 and 577–A. Specifically, Ozark states that the modifications to the tariff sheets: (1) Extend the maximum term of pre-arranged capacity releases that are exempt from advance posting and bidding requirements to thirty-one (31) days; and (2) reduce the restriction period on re-release to the same pre-arranged replacement shipper at less than the maximum rate from thirty (30) days to twenty-eight (28) days.

Ozark states that good cause exists for the Commission to waive its 30-day notice provision and accept the primary sheet to be effective July 10, 1995. Ozark states that on May 1, 1995, Ozark was sold by its former owners to NGC Energy Resources, L.P., and, because of the attendant changes and related demands on the time of necessary personnel, Ozark has been unable to make a tariff filing to comply with Order No. 577 before now. Ozark states that because its filing incorporates the revisions to the regulations granted on rehearing of Order No. 577, the proposed tariff sheets should be allowed to take effect on the day Order No. 577–A becomes effective, July 10, 1995.

Ozark states that copies of the filing were served upon Ozark's jurisdictional customers and interested state regulatory commissions.

Any person desiring to be heard or to protest this filing should file a motion to intervene or protest with the Federal Energy Regulatory Commission, 825 North Capitol Street, N.E., Washington, D.C. 20426, in accordance with Sections 385.211 or 385.214 of the Commission's Rules of Practice and Procedure. All such motions or protests should be filed on or before July 6, 1995. Protests will be considered by the Commission in determining the appropriate action to be taken, but will not serve to make protestants parties to the proceeding. Any person wishing to become a party must file a motion to intervene. Copies of this filing are on file with the Commission and are available for public inspection in the Public Reference Room.

Lois D. Cashell,

Secretary.

[FR Doc. 95–16341 Filed 7–3–95; 8:45 am]

BILLING CODE 6717–01–M

[Docket No. CP94–29–001]

Paiute Pipeline Company; Notice of Amendment

June 28, 1995.

Take notice that on March 27, 1995, Paiute Pipeline Company (Paiute), P.O. Box 94197, Las Vegas, Nevada 89193–4197, filed in Docket No. CP94–29–001, pursuant to Section 7 of the Natural Gas Act, an amendment to its October 15, 1993 application in Docket No. CP94–29–001, requesting authorization to construct and operate certain pipeline loop and pressure regulation and measurement facilities, in order to enable Southwest Gas Corporation-Northern California (Southwest-Northern California) to serve the city of Truckee, California, and environs, and to increase Paiute's capacity to provide additional delivery point flexibility to Southwest Gas Corporation-Northern Nevada (Southwest-Northern Nevada) in its Incline Village, Nevada market area, all as more fully set forth in the amendment which is on file with the Commission and open for public inspection.

Paiute states that on October 15, 1993, Paiute filed its application in Docket No. CP94–29–000, in which it requested various certificate authorizations pursuant to Section 7(c) of the Natural Gas Act. Paiute indicates that the purpose of the requested authorizations was to permit it to transport up to 10,333 Dth/d of additional gas to Southwest-Northern California at its existing delivery point to enable Southwest-Northern California to provide new natural gas service to the Truckee area. In addition, Paiute states that the facilities proposed in its October 15, 1993 application would enable Paiute to provide additional delivery point flexibility to Southwest-Northern Nevada such that Southwest-Northern Nevada could receive additional quantities of up to 2,455 Dth/d of gas at delivery points in Southwest-Northern Nevada's Incline Village market area along the North Tahoe Lateral, and up to 1,496 Dth/d of gas at a delivery point on the Elko Lateral.

Paiute indicates that Southwest-Northern California has recently reevaluated various pipeline transportation options, and has now requested that Paiute expand its system to add delivery capacity between the Wadsworth Junction, where Paiute's mainline divides between its Reno Lateral and Carson Lateral, and the existing delivery point to Southwest-Northern California at the terminus of Paiute's North Tahoe Lateral.

Consequently, Paiute, by its amendment, now requests authorization in this proceeding to construct and operate pipeline loop and measurement and pressure regulating facilities so as to expand the delivery capacity of its system between the Wadsworth Junction and the terminus of its North Tahoe Lateral by 12,788 Dth/d. Paiute states that the proposed facilities will enable it to provide additional firm transportation service between those points to Southwest-Northern California of 10,333 Dth/d, and will enable Paiute to accommodate Southwest-Northern Nevada's request to provide it with additional delivery capacity to its Incline Village delivery points of 2,455 Dth/d. Paiute further states that it will file a new certificate application in a separate docket to request authorization for the Elko Lateral compressor stations.

Specifically, Paiute now proposes to:

(1) Construct and operate 11.1 miles of 16-inch loop pipeline and 3.0 miles of 12-inch loop pipeline on its North Tahoe Lateral;

(2) Construct and operate 5.8 miles of 12-inch loop pipeline on its South Tahoe Lateral;

(3) Install pressure regulating equipment at the California Check Meter station on its North Tahoe Lateral;

(4) Relocate the South Tahoe Lateral pressure reduction station; and

(5) Modify the Wadsworth Junction pressure regulation station.

Paiute states that the estimated cost the proposed facilities if $10,451,878. Paiute intends to finance the cost of construction through ongoing regular financing programs and internally generated funds.

Paiute states that it has entered into a new transportation service agreement with Southwest-Northern California to transport an additional 10,333 Dth/d of gas to it. Paiute further states that it has entered into a transportation service

agreement with Southwest-Northern Nevada under which it would increase its billing determinants by 2,455 Dth/d under Paiute's Rate Schedule FT–1.

Paiute proposes that the rates for the services to be provided by means of the proposed facilities be designed using an incremental facilities surcharge in Rate Schedule FT–1 applicable to the two shippers receiving additional service as a result of the expansion, under which the costs and revenues related to the construction of the proposed facilities for service to the Truckee and Incline Village areas will be considered on an incremental cost basis.

Any person desiring to be heard or to make any protest with reference to said amendment should, on or before July 19, 1995 file with the Federal Energy Regulatory Commission, Washington, D.C. 20426, a motion to intervene or a protest in accordance with the requirements of the Commission Rules of practice and Procedure (18 CFR 385.211 or 385.214) and the Regulations under the Natural Gas Act (18 CFR 157.10). All protest filed with the commission will be considered by it in determining the appropriate action to be taken but will not serve to make the protestants parties to the proceedings. Any person wishing to become a party to a proceeding or to participate as a party in any hearing therein must file a motion to intervene in accordance with the Commission's Rules. All person who have heretofore filed need not file again.

Lois D. Cashell,

Secretary.

[FR Doc. 95–16350 Filed 7–3–95; 8:45 am]

BILLING CODE 8010–01–M

[Docket No. RP95–355–000]

South Georgia Natural Gas Company; Notice of Petition for Limited Waiver of Transportation Tariff Provision and Extension of Time to Make Tariff Filing

June 28, 1995.

Take notice that on June 23, 1995, South Georgia Natural Gas Company (South Georgia) filed a petition for a limited waiver of Section 19.2 of the General Terms and Conditions (GT&C) of its FERC Gas Tariff, Second Revised Volume No. 1.

Section 19.2 of the GT&C provides for an annual redetermination of South Georgia's fuel retention percentage (FRP) based on the gas required for operations during the previous 12-month period ending April 30 plus any amount of fuel that was undercollected or overcollected during that 12-month period. South Georgia is to file revised tariff sheets reflecting the adjusted FRP within 60 days after April 30 to be effective within 30 days thereafter on a prospective basis only.

South Georgia is requesting that the Commission grant it an extension of time until September 1, 1995, to tender its revised tariff sheets reflecting the new FRP to be effective October 1, 1995, pursuant to Section 19.2 of the GT&C. Since the data for the 12 months ending April 30, 1995, show that the FRP should be significantly higher, South Georgia submits that it is in the interests of its shippers for it to be granted additional time to ensure that the data contains no anomalies or errors which should be disregarded in the prospective adjustment to the FRP. Since the change to the FRP will be prospective only, South Georgia submits that no harm to its shippers will be caused by the proposed extension of time.

Southern states that a copy of the filing is being served on all of the South Georgia shippers and interested state commissions.

Any person desiring to be heard or to protest said filing should file a motion to intervene or protest with the Federal Energy Regulatory Commission, 825 North Capitol Street, NE., Washington, DC 20426, in accordance with 18 CFR 385.214 and 385.211 of the Commission's Rules and Regulations. All such motions or protests should be filed on or before July 6, 1995. Protests will be considered by the Commission in determining the appropriate action to be taken, but will not serve to make protestants parties to the proceeding. Any person wishing to become a party must file a motion to intervene. Copies of this filing are on file with the Commission and are available for public inspection in the public reference room.

Lois D. Cashell,

Secretary.

[FR Doc. 95–16340 Filed 7–3–95; 8:45 am]

BILLING CODE 6717–01–M

[Docket No. RP93–148–006 and RP95–62–002]

Tennessee Gas Pipeline Company; Notice of Compliance Filing

June 28, 1995.

Take notice that on June 23, 1995, Tennessee Gas Pipeline Company (Tennessee), filed a revised pro forma tariff sheet and supporting workpapers in accordance with the Commission's order issued on June 8, 1995 in Docket Nos. RP93–148–004 and RP95–62–002]

Take notice that on June 23, 1995, Tennessee Gas Pipeline Company (Tennessee), filed a revised pro forma tariff sheet and supporting workpapers in accordance with the Commission's order issued on June 8, 1995 in Docket Nos. RP93–148–004 and RP95–62–001.

Tennessee states that its filing complies with the Commission's requirement that Tennessee file ''a revised tariff sheet that reflects the removal of demand costs related to its merchant function and company use gas during the period from September 1, 1993 through August 31, 1994, * * * and supporting workpapers for its revised TCRA [Transportation Cost Rate Adjustment] rate.'' Tennessee states that its filing removes $887,206 of demand costs from its TCRA for the applicable twelve-month period.

Any person desiring to protest this filing should file a protest file with the Federal Energy Regulatory Commission, 825 North Capitol Street, N.E., Washington, D.C. 20426, in accordance with the requirements of the Commission's Rules of Practice and Procedure (18 CFR 385.211). All such protests should be filed on or before July 6, 1995. Protests will be considered by the Commission in determining the appropriate action to be taken, but will not serve to make protestants parties to the proceeding. Copies of this filing are on file with the Commission and are available for public inspection.

Lois D. Cashell,

Secretary.

[FR Doc. 95–16349 Filed 7–3–95; 8:45 am]

BILLING CODE 6717–01–M

[Docket No. RP95–356–000]

Transwestern Pipeline Company; Notice of Proposed Changes in FERC Gas Tariff

June 28, 1995.

Take notice that on June 23, 1995, Transwestern Pipeline Company (Transwestern) tendered for filing as part of its FERC Gas Tariff, Second Revised Volume No. 1, the following tariff sheets:

Effective July 10, 1995:

3rd Revised Sheet No. 95A
4th Revised Sheet No. 95C
3rd Revised Sheet No. 95D
3rd Revised Sheet No. 95E
3rd Revised Sheet No. 95F
3rd Revised Sheet No. 95K
2nd Revised Sheet No. 95M
3rd Revised Sheet No. 95N

Transwestern states that on May 31, 1995 in Docket No. RM95–5–001 the Commission issued Order No. 577–A (order). This order, to be effective July 10, 1995, revises 18 CFR Part 284.243 (h) of the Commission's capacity release

regulations. The Commission had earlier issued Order No. 577 on March 29, 1995. In Order 577 the Commission extended the exception from advance posting and bidding to one full calendar month. In Order No. 557–A the Commission, responding to a request for rehearing or clarification, revised the language of the regulation to substitute ''31 days'' for ''calendar month.''

Transwestern states that the purpose of this filing is to amend Transwestern's FERC Gas Tariff to conform to the provisions of this Order.

Transwestern states that copies of the filing were served on it gas utility customers, interested state commissions, and all parties to this proceeding.

Any person desiring to be heard or to protest said filing should file a motion to intervene or protest with the Federal Energy Regulatory Commission, 825 North Capitol Street, N.E., Washington, D.C., 20426, in accordance with Rules 211 and 214 of the Commission's Rules of Practice and Procedure. All such motions or protests should be filed on or before July 6, 1995. Protests will be considered by the Commission in determining the appropriate action to be taken, but will not serve to make protestants parties to the proceeding. Any person wishing to become a party must file a motion to intervene. Copies of this filing are on file with the Commission and are available for public inspection.

Lois D. Cashell,

Secretary.

[FR Doc. 95–16339 Filed 7–3–95; 8:45 am]

BILLING CODE 6717–01–M

[Docket No. RP94–285–001]

Williston Basin Interstate Pipeline Company; Notice of Compliance Filing

June 28, 1995.

Take notice that on June 22, 1995, Williston Basin Interstate Pipeline Company (Williston Basin), tendered for filing revised tariff sheets to Second Revised Volume No. 1 of its FERC Gas Tariff.

Williston Basin states that, in accordance with the Commission's June 7, 1995 Order, the revised tariff sheets modify its nomination variance charge provisions to assess, on a pro rata basis, receipt/delivery point total charges only on those individual shippers at such receipt/delivery point which exceed the threshold tolerance for volumes under their aggregate service agreements at the affected receipt/delivery point.

Williston Basin has requested that the Commission accept this filing to become effective July 1, 1995.

Any person desiring to protest said filing should file a protest with the Federal Energy Regulatory Commission, 825 North Capitol Street, N.E., Washington, D.C. 20426, in accordance with Rule 211 of the Commission's Rules of Practice and Procedure (18 CFR 385.211). All such protests should be filed on or before July 6, 1995. Protests will be considered by the Commission in determining the appropriate action to be taken, but will not serve to make protestants parties to the proceeding. Copies of this filing are on file with the Commission and are available for public inspection.

Lois D. Cashell,

Secretary.

[FR Doc. 95–16348 Filed 7–3–95; 8:45 am]

BILLING CODE 6717–01–M

ENVIRONMENTAL PROTECTION AGENCY

[FRL–5253–9]

Agency Information Collection Activities Under OMB Review

AGENCY: Environmental Protection Agency (EPA).

ACTION: Notice.

SUMMARY: In compliance with the Paperwork Reduction Act (44 U.S.C. 3501 *et seq.*), this notice announces that the Information Collection Request (ICR) abstracted below has been forwarded to the Office of Management and Budget (OMB) for review and comment. The ICR describes the nature of the information collection and its expected cost and burden; where appropriate, it includes the actual data collection instrument.

DATES: Comments must be submitted on or before August 4, 1995.

FOR FURTHER INFORMATION CONTACT: For further information, or for a copy of this ICR, contact Sandy Farmer at (202) 260–2740, please refer to EPA ICR #1758.01.

SUPPLEMENTARY INFORMATION:

Office of Enforcement and Compliance Assurance

Title: Compliance Assistance Measures of Success Reporting Form. (EPA ICR #1758.01 and OMB #2060–xxxx.)

Abstract: This ICR is for a new information collection in support of the Office of Enforcement and Compliance Assurance's (OECA) efforts to evaluate their compliance program through use of performance measures. This information will be collected on the performance of compliance assistance programs, other than those operating under section 507 of the Clean Air Act for which there is a separate ICR in use. The information will be collected so that EPA can better understand the effectiveness of compliance assistance programs vis a vis enforcement programs and so that success stories can be shared between programs. Under this Information Collection Request (ICR), State compliance assistance programs other than those operated under Section 507 of the CAA, will be responsible for reporting to EPA and associated recordkeeping.

State compliance assistance programs will be responsible for reporting: (1) Name of State or Regional program; (2) program utilization; (3) program effectiveness-improved understanding or environmental requirements, behavioral changes, changes in compliance rates and environmental improvements; and (4) data based on industry or population type.

State compliance assistance programs will be responsible for recording all applicable information pertaining to the reporting requirements.

Burden Statement: The total annual public reporting and recordkeeping burden for this collection of information is estimated to be 2650 hours, for an average of 25 hours per respondent. This includes time for reviewing instructions, searching existing data sources, gathering the data needed, completing the collection information and maintaining records.

Respondents: State Compliance Assistance Programs.

Estimated Number of Respondents: 106.

Estimated Total Annual Burden on Respondents: 2650 hours.

Frequency of Collection: Annually.

Send comments regarding the burden estimate, or any other aspect of this information collection, including suggestions for reducing the burden, (please refer to EPA ICR 1758.01 and #2060–xxxx) to:

Sandy Farmer, EPA ICR #1758.01, U.S. Environmental Protection Agency, Information Policy Branch (2136), 401 M Street, SW., Washington, DC 20460.

and

Chris Wolz, OMB #2060–xxxx, Office of Management and Budget, Office of Information and Regulation Affairs, 725 17th Street, NW., Washington, DC 20503.

Dated: June 28, 1995.

[FR Doc. 95–16420 Filed 7–3–95; 8:45 am]

BILLING CODE 6560–50–M

[FRL–5253–5]

Agency Information Collection Activities Under OMB Review

AGENCY: Environmental Protection Agency (EPA).

ACTION: Notice.

SUMMARY: In compliance with the Paperwork Reduction Act (44 U.S.C. 3501 *et seq.*), this notice announces that the Information Collection Request (ICR) abstracted below has been forwarded to the Office of Management and Budget (OMB) for review and comment. The ICR describes the nature of the information collection and its expected cost and burden; where appropriate, it includes the actual data collection instrument.

DATES: Coments must be submitted on or before August 4, 1995.

FOR FURTHER INFORMATION CONTACT: For further information, or for a copy of this ICR, contact Sandy Farmer at (202) 260–2740, please refer to EPA ICR #1601.03.

SUPPLEMENTARY INFORMATION:

Office of Air and Radiation

Title: Air Pollution Regulations for Outer Continental Shelf (OCS) Activities: Reporting, Recordkeeping, and Testing Requirements. (EPA ICR#1601.03 and OMB #2060–0249.)

Abstract: this ICR is an extension of an existing information collection in support of Section 801 of the Clean Air Act (CAA) Amendments of 1990 amended Title III of the CAA by adding section 328 which is titled: Air Pollution from Outer Continental Shelf Activities. Under this ICR, owners and operators of sources involved in the recovery of oil and gas from the outer continental shelf (OCS) are the respondents and recordkeepers for this information collection request.

Owners and operators of affected facilities will be responsible for submitting the following reports: (1) Notice of intent to construct; (2) preconstruction permit application; (3) annual reporting requirements to demonstrate compliance with operating permits; (4) submission of the daily fuel log 60 days after each well drilling completion.

Owners and operators of affected facilities are responsible for maintaining records on the following topics: (1) Daily fuel use associated with each well drilling; (2) records demonstrating compliance with operating permits.

State and local agencies will be responsible for submitting the following reports: (1) Request for EPA transfer of authority in order to enforce the OCS regulations; (2) submission of all permit applications.

Burden Statement: Public reporting burden for this collection of information is estimated to average 25,100 hours per year; the annual reporting burden per respondent is estimated to be 612 hours, including time of reviewing instructions, searching existing data sources, gathering the data needed, completing the collection of information and maintaining records.

Respondents: State and local governments and OCS stationary sources.

Estimated Number of Respondents: 41.

Estimated Total Annual Burden on Respondents: 25,100 hours.

Frequency of Collection: One-time, on occasion and annually.

Send comments regarding the burden estimate, or any other aspect of this information collection, including suggestions for reducing the burden, (please refer to EPA ICR 1601.03 and #2060–0249) to:

Sandy Farmer, EPA ICR #1601.03, U.S. Environmental Protection Agency, Information Policy Branch (2136), 401 M Street, SW., Washington, DC 20460.

and

Chris Wolz, OMB #2060–0243, Office of Management and Budget, Office of Information and Regulation Affairs, 725 17th Street, NW., Washington, DC 20503.

Dated: June, 27, 1995.

Joseph Retzer,

Director, Regulatory Information Division.

[FR Doc. 95–16421 Filed 7–3–95; 8:45 am]

BILLING CODE 6560–50–M

[FRL–5253–4]

Agency Information Collection Activities Under OMB Review

AGENCY: Environmental Protection Agency (EPA).

ACTION: Notice.

SUMMARY: In compliance with the Paperwork Reduction Act (44 U.S.C. 3501 *et seq.*), this notice announces that the Information Collection Request (ICR) abstracted below has been forwarded to the Office of Management and Budget (OMB) for review and comment. The ICR describes the nature of the information collection and its expected cost and burden.

DATE: Comments must be submitted on or before August 4, 1995.

FOR FURTHER INFORMATION OR A COPY CALL: Sandy Farmer at EPA (202) 260–2740, please refer to ICR #1446.05.

SUPPLEMENTARY INFORMATION:

Office of Prevention, Pesticides and Toxic Substances

Title: Polychlorinated Biphenyls (PCBs)—Notification and Manifesting of PCB Waste Activities *and* Records of PCB Storage and Disposal. (EPA ICR No. 1446.05; OMB No. 2070–0112). This notice requests an extension of a currently approved collection.

Abstract: Under § 6(e) of the Toxic Substances Control Act (TSCA), generators of PCB waste must prepare manifests when they ship the waste for storage and disposal. The manifests enable EPA to track the chain of custody for a particular PCB waste shipment. Generators must also submit to EPA an Exception Report if, within 45 days, they do not receive a copy of the PCB waste manifest signed by the owner or operator of the PCB commercial storage and disposal facility to which the waste was shipped. They are also required to submit an annual report of unmanifested PCB waste.

All commercial storers, transporters and disposers of PCB waste must notify the EPA of their PCB waste handling activities, and they must obtain an ID number to be used on the required PCB waste manifests. Owners and operators of commercial storage and disposal facilities, must submit to the Agency an annual report of discrepancies between the quantity and type of PCB waste designated on the manifest or shipping papers, and the quantity or type of PCB waste actually delivered to, and received by, their designated facilities. Commercial storers of PCB waste must submit financial assurance and closure plans for EPA approval of their facilities. Commercial storers must also keep records of burden associated with 3rd-party notifications. In addition, users, storers, and disposers of PCB waste must keep records of all their PCB activities, including copies of manifests and all annual records of the disposition of PCBs. The Agency uses the information to monitor the movement of PCBs and their ultimate disposal, and to ensure compliance with the regulations.

Burden Statement: The estimated average public reporting burden for this collection of information is .38 hour per respondent for reporting, and 7.4 hours per recordkeeper annually. This estimate includes the time to read instructions, gather existing information and complete the required reports.

Respondents: Handlers, users, storers and disposers of PCBs, and owners and operators of PCB disposal facilities.

Estimated No. of Respondents: 22,600.

Estimated No. of Responses per Respondent: 1.

Estimated Total Annual Burden on Respondents: 175,648 hours.

Frequency of Collection: Annually and on occasion.

Send comments regarding the burden estimate, or any other aspect of the information collection, including suggestions for reducing the burden, (please refer to EPA ICR #1446.05 and OMB #2070–0112) to:

Sandy Farmer, EPA ICR #1446.05, U.S. Environmental Protection Agency, Regulatory Information Division (2136), 401 M Street, S.W., Washington, D.C. 20460.

and

Tim Hunt, OMB #2070–0112, Office of Management and Budget, Office of Information and Regulatory Affairs, 725 17th Street, N.W., Washington, D.C. 20503.

Dated: June 28, 1995.

Joseph Retzer,

Director, Regulatory Information Division.

[FR Doc. 95–16424 Filed 7–3–95; 8:45 am]

BILLING CODE 6560–50–M

[FRL–5253–7]

Massachusetts: Final Adequacy Determination of State/Tribal Municipal Solid Waste Permit Program

AGENCY: Environmental Protection Agency.

ACTION: Notice of final determination of full program adequacy for the Commonwealth of Massachusetts's Municipal Solid Waste Landfill Permitting Program.

SUMMARY: Section 4005(c)(1)(B) of the Resource Conservation and Recovery Act (RCRA), as amended by the Hazardous and Solid Waste Amendments (HSWA) of 1984, 42 U.S.C. 6945(c)(1)(B), requires states to develop and implement permit programs to ensure that municipal solid waste landfills (MSWLFs) which may receive hazardous household waste or small quantity generator hazardous waste will comply with the revised Federal MSWLF Criteria (40 CFR Part 258). RCRA Section 4005(c)(1)(C), 42 U.S.C. 6945(c)(1)(C), requires the Environmental Protection Agency (EPA) to determine whether states have adequate ''permit'' programs for MSWLFs, but does not mandate issuance of a rule for such determinations. EPA has drafted and is in the process of proposing a State/Tribal Implementation Rule (STIR) that will provide procedures by which EPA will approve, or partially approve, State/Tribal landfill permit programs. The Agency intends to approve adequate State/Tribal MSWLF permit programs as applications are submitted. Thus, these approvals are not dependent on final promulgation of the STIR. Prior to promulgation of the STIR, adequacy determinations will be made based on the statutory authorities and requirements. In addition, States/Tribes may use the draft STIR as an aid in interpreting these requirements. The Agency believes that early approvals have an important benefit. Approved State/Tribal permit programs provide for interaction between the State/Tribe and the owner/operator regarding site-specific permit conditions. Only those owners/operators located in State/Tribes with approved permit programs can use the site-specific flexibilities provided by 40 CFR Part 258 to the extent the State/Tribal permit program allows such flexibility. EPA notes that regardless of the approval status of a State/Tribe and the permit status of any facility, the federal landfill criteria shall apply to all permitted and unpermitted MSWLF facilities.

The Commonwealth of Massachusetts (Commonwealth or Massachusetts) applied for a determination of adequacy under Section 4005(c)(1)(C) of RCRA, 42 U.S.C. 6945(c)(1)(C). Region I reviewed Massachusetts's MSWLF permit program adequacy application and made a determination that all portions of Massachusetts's MSWLF permit program are adequate to assure compliance with the revised Federal MSWLF Criteria. After consideration of all comments received, EPA is today issuing a final determination that the Commonwealth's program is adequate.

EFFECTIVE DATE: The determination of adequacy for the Commonwealth of Massachusetts shall be effective on July 5, 1995.

FOR FURTHER INFORMATION CONTACT: EPA Region I, John F. Kennedy Federal Building, Boston, MA 02203, Attn: Mr. John F. Hackler, Chief, Solid Waste and Geographic Information Section, mail code HER-CAN 6, telephone (617) 573–9670.

SUPPLEMENTARY INFORMATION:

A. Background

On October 9, 1991, EPA promulgated revised criteria for MSWLFs (40 CFR Part 258). Subtitle D of RCRA, as amended by the Hazardous and Solid Waste Amendments of 1984 (HSWA), requires states to develop permitting programs to ensure that MSWLFs comply with the Federal Criteria under 40 CFR Part 258. Subtitle D also requires in Section 4005(c)(1)(C), 42 U.S.C. 6945(c)(1)(C), that EPA determine the adequacy of state municipal solid waste landfill permit programs to ensure that facilities comply with the revised Federal Criteria. To fulfill this requirement, the Agency has drafted and is in the process of proposing a State/Tribal Implementation Rule (STIR). The rule will specify the requirements which State/Tribal programs must satisfy to be determined adequate.

EPA intends to approve State/Tribal MSWLF permit programs prior to the promulgation of the STIR. EPA interprets the requirements for states or tribes to develop ''adequate'' programs for permits, or other forms of prior approval and conditions (for example, license to operate) to impose several minimum requirements. First, each State/Tribe must have enforceable standards for new and existing MSWLFs that are technically comparable to EPA's revised MSWLF criteria. Second, the State/Tribe must have the authority to issue a permit or other notice of prior approval and conditions to all new and existing MSWLFs in its jurisdiction. The State/Tribe also must provide for public participation in permit issuance and enforcement as required in Section 7004(b) of RCRA, 42 U.S.C. 6974(b). Finally, the State/Tribe must show that it has sufficient compliance monitoring and enforcement authorities to take specific action against any owner or operator that fails to comply with an approved MSWLF program.

EPA Regions will determine whether a State/Tribe has submitted an ''adequate'' program based on the interpretation outlined above. EPA plans to provide more specific criteria for this evaluation when it proposes the STIR. EPA expects States/Tribes to meet all of these requirements for all elements of a MSWLF program before it gives full approval to a MSWLF program.

B. Commonwealth of Massachusetts

On August 13, 1993, Region I received Massachusetts's final MSWLF permit program application for adequacy determination. On May 5, 1994, EPA published in the **Federal Register** the first tentative determination of adequacy for all portions of Massachusetts's program. Further background on the tentative determination of adequacy appears at 59 FR 23202 (May 5, 1994).

Along with the tentative determination, EPA announced the availability of the application for public comment. In addition, a public hearing was tentatively scheduled. However, because there were no requests for a hearing, a hearing was not held.

In an effort to seek additional public comments, EPA extended the public comment period for the tentative determination of adequacy for Massachusetts's municipal solid waste landfill permitting program by publishing on September 21, 1994, a second tentative determination of adequacy for all portions of Massachusetts's program. Further background on the tentative determination of adequacy appears at 59 FR 48427 (September 21, 1994).

C. Public Comment

EPA received written comments on the tentative determination of adequacy for Massachusetts's MSWLF permit program. One commentor supported full approval of the Commonwealth's program. The commentor stated that the Massachusetts Part 258 program ''satisfies all of the federal Criteria, and * * * the Commonwealth has demonstrated its ability and willingness to equitably and effectively administer a Part 258 program.'' In particular, the commentor believes that the alternative liner designs authorized by Massachusetts's regulations are consistent with the criteria set forth in 40 CFR 258.40(a)(1).

The same commentor also noted that full approval should be granted upon the condition that the Commonwealth's regulations are revised to ensure consistency with the 40 CFR Part 258 standards. Specifically, the commentor recommended the following amendment to 310 CMR 19.080: ''No variance will be approved if such approval would result in the imposition or recognition of a requirement less stringent than comparable federal requirements.''

EPA agrees that a state program must be implemented consistently with the federal requirements of Part 258. However, EPA believes that Massachusetts's laws, regulations, and guidance documents will ensure that Massachusetts's permit program is as stringent as the federal requirements. For example, to account for local site-specific conditions, Part 258 allows the Director of an approved state some flexibility. The Director may approve the use of alternate daily cover material when an owner/operator demonstrates that the alternate meets the performance standard of 40 CFR 258.21(b). EPA's tentative adequacy determination for the Massachusetts MSWLF program was based on the condition that the variance provisions of 310 CMR 19.080 will be implemented in accordance with the flexibilities and performance standards set forth in the Federal Criteria, and will not result in less stringent requirements. The Commonwealth's existing variance provision, 310 CMR 19.080(2)(b), requires a demonstration to ensure that ''substitute measures will provide the same or greater degree of protection to public health, safety and the environment as the application of the regulation(s) from which a variance is requested.'' EPA believes the requirement that substitute measures provide the same or greater degree of protection is consistent with the specific flexibilities and performance standards contained in the Federal Criteria.

Another group of commentors expressed their concern that Massachusetts's MSWLF program does not go far enough to protect low income communities and communities of color against bearing a disproportionate burden of environmental harm. While the commentors noted that ''the Commonwealth's program does provide an effective framework for public participation and for minimizing disproportionate siting of landfills,'' they believe ''the siting process would not require consideration of background health problems, undue environmental burdens, and cumulative environmental risks in determining the suitability of future landfill sites.'' Specifically, the commentors recommended that the Massachusetts MSWLF program: (1) Consider the nature of residential neighborhoods near a proposed site; (2) require some consideration of background or disproportionate health and environmental burdens in making siting decisions; and (3) increase opportunities for public involvement specifically from communities that suffer disproportionate or undocumented environmental burdens.

EPA shares the commentors' concerns that low income communities and communities of color be adequately protected in the siting and permitting of municipal solid waste landfills. EPA believes, however, that the Federal MSWLF Criteria and the guidelines set forth in the STIR will serve to adequately protect public health in all communities. Massachusetts has demonstrated that its program is no less stringent than the criteria for program approval set forth in 40 CFR part 258 and in the STIR. In addition, Massachusetts has voluntarily included in the narrative portion of its application a commitment to implement its MSWLF permitting program in accordance with the principles of environmental justice. Although, not specifically required by its regulations to consider the nature of residential neighborhoods near a proposed site and background or disproportionate health and environmental burdens in making siting decisions, the MADEP may always consider these factors in the siting process and has historically done so in other siting decisions. In addition, the Massachusetts Environmental Protection Act (MEPA) requires extensive public review of a proposed solid waste site before it can be approved. With regard to public involvement, the Massachusetts program provides for public notice to boards of health, abutters and the general public, allows for public comment from any interested party and requires public hearings.

The final commentor expressed concern that unlined landfills in Massachusetts are not being closed quickly enough. The Federal Criteria do not establish a deadline for the closure of unlined landfills. Nevertheless, EPA is also concerned that any landfills which may pose a threat to public health or the environment be closed as soon as practicable. EPA is satisfied that Massachusetts is making satisfactory progress in this area.

D. Decision

After evaluating the Massachusetts program, Region I concludes that the Commonwealth of Massachusetts's MSWLF permitting program meets all of the statutory and regulatory requirements established by RCRA. Accordingly, the Commonwealth of Massachusetts is granted a determination of adequacy for all portions of its municipal solid waste permit program.

The Massachusetts MSWLF permitting program is technically comparable to, no less stringent than, and equally as effective as the revised Federal Criteria. The revised *Landfill Assessment and Closure Guidance Manual* (LAC Manual) is applicable to all existing MSWLFs and to all MSWLF permit applications effective July 1, 1993. Massachusetts will implement its MSWLF permit program through enforceable permit conditions. To ensure compliance with the Federal Criteria, Massachusetts has revised its current permit requirements through the existing *Supplement to Landfill Assessment and Closure Manual.* These revisions occur in the following areas:

1. The adoption of the EPA approved method 8260 to test ground water;

2. The addition of the provision on the minimum distance of ground water

monitoring wells from the landfill boundary;

3. Compliance with the protocols for testing and analyzing ground water for constituents listed in Appendix II to Part 258;

4. Compliance with the procedures for notifying the Department of Environmental Protection about explosive levels of landfill gas;

5. Compliance with the protocols for conducting inspections to detect the presence of hazardous waste and procedures for reporting results of such inspections; and

6. Compliance with the minimum design standard for alternative landfill cover.

The Massachusetts Department of Environmental Protection will update the permits of existing municipal solid waste landfills scheduled to remain open after the effective date of 40 CFR Part 258, to assure compliance with current state requirements. The Commonwealth of Massachusetts is not asserting jurisdiction over Tribal land recognized by the United States government for the purpose of this notice. Tribes recognized by the United States government are also required to comply with the terms and conditions found at 40 CFR part 258.

Region I notes that Massachusetts's receipt of federal financial assistance subjects the Commonwealth to the statutory obligations of Title VI of the Civil Rights Act of 1964. EPA Region I is committed to working with the Commonwealth to support and ensure compliance with all Title VI requirements. Furthermore, the narrative portion of the Commonwealth's application expresses Massachusetts's voluntary support of environmental justice principles in the management of the Subtitle D program. Although this is not a criterion for program approval, Region I acknowledges Massachusetts's support of environmental justice principles.

Section 4005(a) of RCRA, 42 U.S.C. 6945(a) provides that citizens may use the citizen suit provisions of Section 7002 of RCRA, 42 U.S.C. 6972 to enforce the Federal MSWLF Criteria set forth in 40 CFR Part 258 independent of any State/Tribal enforcement program. As EPA explained in the preamble to the final MSWLF criteria, EPA expects that any owner or operator complying with provisions in a State/Tribal program approved by EPA should be considered to be in compliance with the Federal Criteria. See 56 FR 50978, 50995 (October 9, 1991).

Today's action takes effect on the date of publication. EPA believes it has good cause under Section 553(d) of the Administrative Procedure Act, 5 U.S.C. 553(d), to put this action into effect less than 30 days after the publication in the **Federal Register**. All of the requirements and obligations in the Commonwealth's program are already in effect as a matter of state law. EPA's action today does not impose any new requirements that the regulated community must begin to comply with. Nor do these requirements become enforceable by EPA as federal law. Consequently, EPA finds that it does not need to give notice prior to making its approval effective.

Compliance With Executive Order 12866

The Office of Management and Budget has exempted this notice from the requirements of section 6 of Executive Order 12866.

Certification Under the Regulatory Flexibility Act

Pursuant to the provisions of 5 U.S.C. 605(b), I hereby certify that this approval will not have a significant economic impact on a substantial number of small entities. It does not impose any new burdens on small entities. This notice, therefore, does not require a regulatory flexibility analysis.

Authority

This notice is issued under the authority of Sections 2002, 4005 and 4010(c) of the Solid Waste Disposal Act as amended, 42 U.S.C. 6912, 6945 and 6949a(c–c).

Dated: June 25, 1995.

John P. DeVillars,

Regional Administrator.

[FR Doc. 95–16422 Filed 7–3–95; 8:45 am]

BILLING CODE 6560–50–P

[OPP–34078; FRL–4959–9]

Notice of Receipt of Requests for Amendments to Delete Uses in Certain Pesticide Registrations

AGENCY: Environmental Protection Agency (EPA).

ACTION: Notice.

SUMMARY: In accordance with section 6(f)(1) of the Federal Insecticide, Fungicide and Rodenticide Act (FIFRA), as amended, EPA is issuing a notice of receipt of request for amendment by registrants to delete uses in certain pesticide registrations.

DATE: Unless a request is withdrawn, the Agency will approve these use deletions and the deletions will become effective on October 3, 1995.

FOR FURTHER INFORMATION CONTACT: By mail: James A. Hollins, Office of Pesticide Programs (7502C), Environmental Protection Agency, 401 M St., SW., Washington, DC 20460, Office location for commercial courier delivery, telephone number, and internet e-mail address: Room 216, Crystal Mall No. 2, 1921 Jefferson Davis Highway, Arlington, VA 22202, (703) 305–5761, Hollins.james@epamail.gov.

SUPPLEMENTARY INFORMATION:

I. Introduction

Section 6(f)(1) of FIFRA provides that a registrant of a pesticide product may at any time request that any of its pesticide registrations be amended to delete one or more uses. The Act further provides that, before acting on the request, EPA must publish a notice of receipt of any such request in the **Federal Register**. Thereafter, the Administrator may approve such a request.

II. Intent to Delete Uses

This notice announces receipt by the Agency of applications from registrants to delete uses in the 14 pesticide registrations listed in Table 1 below. These registrations are listed by registration number, product names/active ingredients and the specific uses deleted. Users of these products who desire continued use on crops or sites being deleted should contact the applicable registrant before October 3, 1995 to discuss withdrawal of the applications for amendment. This 90–day period will also permit interested members of the public to intercede with registrants prior to the Agency approval of the deletion.

TABLE 1.—REGISTRATIONS WITH REQUESTS FOR AMENDMENTS TO DELETE USES IN CERTAIN PESTICIDE REGISTRATIONS

EPA Reg Nr	Product Name (Active Ingredient)	Delete From Label
000070–00232	Rigo Dursban 2E (Chlorpyrifos)	Mosquito control adulticide & larvicide
000070–00286	Rigo Dursban 1E Insecticide (Chlorpyrifos)	Mosquito adulticide & larvicide use

TABLE 1.—REGISTRATIONS WITH REQUESTS FOR AMENDMENTS TO DELETE USES IN CERTAIN PESTICIDE REGISTRATIONS—Continued

EPA Reg Nr	Product Name (Active Ingredient)	Delete From Label
000655–00466	Prentox Dursban 2E Insecticide (Chlorpyrifos)	Mosquito adulticide & larvicide use
000655–00499	Prentox Dursban 4E Insecticide (Chlorpyrifos)	Mosquito adulticide & larvicide use
000769–00699	Dursban 4E Insecticide (Chlorpyrifos)	Control of mosquitos
004581–00172	Hydrothol 191 Granular (Endothall)	Use on rice
004816–00537	Pyrenone Dursban Dual Use E.C. (Chlorpyrifos)	Broad area mosquito control
004816–00593	Dursban II-E Insecticide (Chlorpyrifos)	Broad area mosquito control
004816–00594	Dursban Multi-Purpose Insecticide (Chlorpyrifos)	Broad area mosquito control
004816–00637	Spray-A-Way (Chlorpyrifos)	Broad area mosquito control
005481–00121	Chlorpyrifos Granules 1 (Chlorpyrifos)	Mosquito larvacide use
010370–00065	Dursban 4E Insecticide (Chlorpyrifos)	Broad area mosquito control
062719–00011	Dursban 4E (Chlorpyrifos)	Mosquito adulticide use
062719–00065	Dursban 2E (Chlorpyrifos)	Mosquito adulticide use

The following Table 2 includes the names and addresses of record for all registrants of the products in Table 1, in sequence by EPA company number.

TABLE 2.—REGISTRANTS REQUESTING AMENDMENTS TO DELETE USES IN CERTAIN PESTICIDE REGISTRATIONS

Company No.	Company Name and Address
000070	Wilbur-Ellis Co., 191 W. Shaw Ave., Suite 107, Fresno, CA 933704.
000655	Prentiss Inc., C.B. 2000, 21 Vernon St., Floral Park, NY 11001.
000769	Sureco Inc., c/o H.R. McLane, Inc., 7210 Red Road, Suite 206, Miami, FL 33143.
004581	Elf Atochem North America, Inc., 2000 Market St., Philadelphia, PA 19103.
004816	AgrEvo Environmental Health, 95 Chestnut Ridge Road, Montvale, NJ 07645.
005481	Amvac, Chemical Corp., 2110 Davie Ave., City of Commerce, CA 90040.
010370	AgrEvo Environmental Health, 95 Chestnut Ridge Road, Montvale, NJ 07645.
062719	DowElanco, 9330 Zionsville Road, Indianapolis, IN 46268.

III. Existing Stocks Provisions

The Agency has authorized registrants to sell or distribute product under the previously approved labeling for a period of 18 months after approval of the revision, unless other restrictions have been imposed, as in special review actions.

List of Subjects

Environmental protection, Pesticides and pests, Product registrations.

Dated: June 15, 1995.

Frank Sanders,

Director, Program Management and Support Division, Office of Pesticides Program.

[FR Doc. 95–16187 Filed 7–3–95; 8:45 am]

BILLING CODE 6560–50–F

[OPP–66213; FRL 4959–8]

Notice of Receipt of Requests to Voluntarily Cancel Certain Pesticide Registrations

AGENCY: Environmental Protection Agency (EPA).

ACTION: Notice.

SUMMARY: In accordance with section 6(f)(1) of the Federal Insecticide, Fungicide, and Rodenticide Act (FIFRA), as amended, EPA is issuing a notice of receipt of requests by registrants to voluntarily cancel certain pesticide registrations.

DATES: Unless a request is withdrawn by October 3, 1995, orders will be issued cancelling all of these registrations.

FOR FURTHER INFORMATION CONTACT: By mail: James A. Hollins, Office of Pesticide Programs (7502C), Environmental Protection Agency, 401 M St., SW., Washington, DC 20460. Office location for commercial courier delivery and telephone number: Room 216, Crystal Mall No. 2, 1921 Jefferson Davis Highway, Arlington, VA, (703) 305–5761; e-mail: hollins.james.@epamail.epa.gov.

SUPPLEMENTARY INFORMATION:

I. Introduction

Section 6(f)(1) of the Federal Insecticide, Fungicide, and Rodenticide Act (FIFRA), as amended, provides that a pesticide registrant may, at any time, request that any of its pesticide registrations be cancelled. The Act further provides that EPA must publish a notice of receipt of any such request in the **Federal Register** before acting on the request.

II. Intent to Cancel

This Notice announces receipt by the Agency of requests to cancel some 91 pesticide products registered under section 3 or 24(c) of FIFRA. These registrations are listed in sequence by registration number (or company number and 24(c) number) in the following Table 1.

TABLE 1. — REGISTRATIONS WITH PENDING REQUESTS FOR CANCELLATION

Registration No.	Product Name	Chemical Name
000192–00166	Dexol Borer Killer Crystals	Paradichlorobenzene
000239–01701	Ortho Sevin Garden Spray	1-Naphthyl-*N*-methylcarbamate
000239–02356	Ortho Liquid Sevin	1-Naphthyl-*N*-methylcarbamate
000239–02562	Ortho Formula 101 Insect Spray	Methoxychlor (2,2-bis(*p*-methoxyphenyl)-1,1,1-trichloroethane)
		1-Naphthyl-*N*-methylcarbamate
		O,O-Dimethyl phosphorodithioate of diethyl mercaptosuccinate
000239–02563	Bug-Geta Liquid Snail, Slug & Insect Killer	2,4,6,8-Tetramethyl-1,3,5,7-tetroxocane
		1-Naphthyl-*N*-methylcarbamate
000264–00338	Fruitone Cpa Pineapple Growth Regulator	2-(*m*-Chlorophenoxy)propionic acid, sodium salt
000802–00544	Lilly Miller Simazine 4G Pre-Emergent Weed & Grass Kill	2-Chloro-4,6-bis(ethylamino)-*s*-triazine
001448–00071	Busan 95	2,2-Dibromo-3-nitrilopropionamide
001448–00073	Busan 96	2,2-Dibromo-3-nitrilopropionamide
001450–00011	Premerge Plus	3,5-Dinitro-*N*4,*N*4-dipropylsulfanilamide
001769–00024	National Killzol Insect Spray	*N*-Octyl bicycloheptene dicarboximide
		(Butylcarbityl)(6-propylpiperonyl) ether 80% and related compounds 20%
		Pyrethrins
001769–00047	Mint - Aire	Isopropanol
		1,2-Propanediol
		Methyldodecylbenzyl trimethyl ammonium chloride 80% and methyldodecylxylylene
		Triethylene glycol
001769–00106	Tri-Gly	1,2-Propanediol
		Methyldodecylbenzyl trimethyl ammonium chloride 80% and methyldodecylxylylene
		Triethylene glycol
001769–00111	National Chemsearch Patrol Insecticide	*N*-Octyl bicycloheptene dicarboximide
		(Butylcarbityl)(6-propylpiperonyl) ether 80% and related compounds 20%
		Pyrethrins
001769–00137	National Chemsearch Vina-Chlor Insecticide	Methoxychlor (2,2-bis(*p*-methoxyphenyl)-1,1,1-trichloroethane)
		2,2-Dichlorovinyl dimethyl phosphate
001769–00175	National Chemsearch Iso Spray	*o*-Isopropoxyphenyl methylcarbamate
		N-Octyl bicycloheptene dicarboximide
		(Butylcarbityl)(6-propylpiperonyl) ether 80% and related compounds 20%
		Pyrethrins
001769–00187	Flair	Isopropanol
		1,2-Propanediol
		Methyldodecylbenzyl trimethyl ammonium chloride 80% and methyldodecylxylylene
		Triethylene glycol
001769–00189	NCH Aquafog	*N*-Octyl bicycloheptene dicarboximide
		(Butylcarbityl)(6-propylpiperonyl) ether 80% and related compounds 20%
		Pyrethrins
001769–00200	National Chemsearch Skeeta Fog Insecticide Concentrate	Methoxychlor (2,2-bis(*p*-methoxyphenyl)-1,1,1-trichloroethane)
		2,2-Dichlorovinyl dimethyl phosphate
001769–00203	Skychoda	1,2-Dibromo-2,2-dichloroethyl dimethyl phosphate
001769–00216	Bayos Oil Soluble Residual Spray	*o*-Isopropoxyphenyl methylcarbamate
		2,2-Dichlorovinyl dimethyl phosphate

TABLE 1. — REGISTRATIONS WITH PENDING REQUESTS FOR CANCELLATION—Continued

Registration No.	Product Name	Chemical Name
001769–00219	National Chemsearch Deo-Sect Granules	2,2-Dichlorovinyl dimethyl phosphate
001769–00224	Aero-Syn	(5-Benzyl-3-furyl)methyl 2,2-dimethyl-3-(2-methylpropenyl)cyclopropanecarboxylate
001769–00229	Aero-Syn O	(5-Benzyl-3-furyl)methyl 2,2-dimethyl-3-(2-methylpropenyl)cyclopropanecarboxylate
001769–00240	Armada	*N*-Octyl bicycloheptene dicarboximide
		(Butylcarbityl)(6-propylpiperonyl) ether 80% and related compounds 20%
		Pyrethrins
		(5-Benzyl-3-furyl)methyl 2,2-dimethyl-3-(2-methylpropenyl)cyclopropanecarboxylate
001769–00261	National Chemsearch Fly and Roach Bait	*o*-Isopropoxyphenyl methylcarbamate
001769–00265	Killzol Insect Spray	(Butylcarbityl)(6-propylpiperonyl) ether 80% and related compounds 20%
		Pyrethrins
001769–00267	National Chemsearch Granular Insecticide	*O,O*-Diethyl *O*-(3,5,6-trichloro-2-pyridyl) phosphorothioate
001769–00292	Syn-Tes 35	(5-Benzyl-3-furyl)methyl 2,2-dimethyl-3-(2-methylpropenyl)cyclopropanecarboxylate
001769–00293	Syn Tec-2	(5-Benzyl-3-furyl)methyl 2,2-dimethyl-3-(2-methylpropenyl)cyclopropanecarboxylate
001769–00295	National Chemsearch P.O.W.	2-Methyl-4-oxo-3-(2-propenyl)-2-cyclopenten-1-yl *d*-trans-2,2-dimethyl-
		o-Isopropoxyphenyl methylcarbamate
		N-Octyl bicycloheptene dicarboximide
		(Butylcarbityl)(6-propylpiperonyl) ether 80% and related compounds 20%
001769–00297	Tetra-Cide.	(1-Cyclohexene-1,2-dicarboximido)methyl 2,2-dimethyl-3-(2-methylpropenyl)cycloprop
		(3-Phenoxyphenyl)methyl *d*-cis and trans* 2,2-dimethyl-3-(2-methylpropenyl)cyclopro
001769–00299	National Chemsearch Bi-Thrin Insecticide Spray	*d*-trans-Chrysanthemum monocarboxylic acid ester of *d*-2-allyl-4-hydroxy-3-
		N-Octyl bicycloheptene dicarboximide
		(Butylcarbityl)(6-propylpiperonyl) ether 80% and related compounds 20%
001769–00301	S.P.S. 50	(5-Benzyl-3-furyl)methyl 2,2-dimethyl-3-(2-methylpropenyl)cyclopropanecarboxylate
001769–00302	T.R.F. 600	(1-Cyclohexene-1,2-dicarboximido)methyl 2,2-dimethyl-3-(2-methylpropenyl)cycloprop
		(3-Phenoxyphenyl)methyl *d*-cis and trans* 2,2-dimethyl-3-(2-methylpropenyl)cyclopro
001769–00303	National Chemsearch Micro-Syn 300	(5-Benzyl-3-furyl)methyl 2,2-dimethyl-3-(2-methylpropenyl)cyclopropanecarboxylate
001769–00304	Aqua-Thrin	*d*-trans-Chrysanthemum monocarboxylic acid ester of *d*-2-allyl-4-hydroxy-3-
		N-Octyl bicycloheptene dicarboximide
		(Butylcarbityl)(6-propylpiperonyl) ether 80% and related compounds 20% Pyrethrins
001769–00305	Vachlor Asphalt Vapor Barrier	2,6-Dichlorobenzonitrile
001769–00306	Secure Insecticide	2-Methyl-4-oxo-3-(2-propenyl)-2-cyclopenten-1-yl *d*-trans-2,2-dimethyl-
		N-Octyl bicycloheptene dicarboximide
		(Butylcarbityl)(6-propylpiperonyl) ether 80% and related compounds 20% Pyrethrins
001769–00311	P-O-W II	2-Methyl-4-oxo-3-(2-propenyl)-2-cyclopenten-1-yl *d*-trans-2,2-dimethyl-
		o-Isopropoxyphenyl methylcarbamate
		N-Octyl bicycloheptene dicarboximide
		(Butylcarbityl)(6-propylpiperonyl) ether 80% and related compounds 20% Pyrethrins

TABLE 1. — REGISTRATIONS WITH PENDING REQUESTS FOR CANCELLATION—Continued

Registration No.	Product Name	Chemical Name
001769–00312	Hydrocide 85	*N*-Octyl bicycloheptene dicarboximide
		(Butylcarbityl)(6-propylpiperonyl) ether 80% and related compounds 20%
		Pyrethrins
001769–00316	Armada II	*N*-Octyl bicycloheptene dicarboximide
		(Butylcarbityl)(6-propylpiperonyl) ether 80% and related compounds 20%
		Pyrethrins
001769–00347	Squad II Insecticide	*N*-Octyl bicycloheptene dicarboximide
		(Butylcarbityl)(6-propylpiperonyl) ether 80% and related compounds 20%
		Pyrethrins
001769–00349	Fire One	Rotenone
		Cube Resins other than rotenone
001769–00352	Fenoxycide General Purpose Insect Killer.	(3-Phenoxyphenyl)methyl *d*-cis and trans* 2,2-dimethyl-3-(2-methylpropenyl)cyclopro
001769–00360	Outright Flea & Tick Shampoo	2-Methyl-4-oxo-3-(2-propenyl)-2-cyclopenten-1-yl *d*-trans-2,2-dimethyl-
		N-Octyl bicycloheptene dicarboximide
		(3-Phenoxyphenyl)methyl *d*-cis and trans* 2,2-dimethyl-3-(2-methylpropenyl)cyclopro
001769–00362	Pet Stop Aerosol Dog and Cat Repellent	Methyl nonyl ketone
002205–00006	Paradichlorobenzene	Paradichlorobenzene
002935–00359	Wilbur-Ellis Phosphamidon 8 Spray (Insecticide)	2-Chloro-2-diethylcarbamoyl-1-methylvinyl dimethyl phosphate
002935 WA–91–0031	Wilbur-Ellis Phosphamidon 8 Spray (insecticide)	2-Chloro-2-diethylcarbamoyl-1-methylvinyl dimethyl phosphate
003125 CA–82–0103	Meta-Systox-R Spray Concentrate	*S*-(2-(Ethylsulfinyl)ethyl) *O,O*-dimethyl phosphorothioate
003125 CA–82–0104	Meta-Systox-R Spray Concentrate	*S*-(2-(Ethylsulfinyl)ethyl) *O,O*-dimethyl phosphorothioate
003125 CA–91–0029	Metasystox-R Spray Concentrate	*S*-(2-(Ethylsulfinyl)ethyl) *O,O*-dimethyl phosphorothioate
003125 ID–77–0006	Meta-Systox-R Spray Concentrate	*S*-(2-(Ethylsulfinyl)ethyl) *O,O*-dimethyl phosphorothioate
003125 ID–78–0001	Meta-Systox-R Spray Concentrate	*S*-(2-(Ethylsulfinyl)ethyl) *O,O*-dimethyl phosphorothioate
003125 NM–79–0025	Furadan 4 Flowable	2,3-Dihydro-2,2-dimethyl-7-benzofuranyl methylcarbamate
		2,3-Dihydro-2,2-dimethyl-7-benzofuranyl methylcarbamate
		S-(2-(Ethylsulfinyl)ethyl) *O,O*-dimethyl phosphorothioate
003125 NV–77–0014	Meta-Systox-R Spray Concentrate	*S*-(2-(Ethylsulfinyl)ethyl) *O,O*-dimethyl phosphorothioate
003125 OH–89–0004	Metasystox-R Spray Concentrate	*S*-(2-(Ethylsulfinyl)ethyl) *O,O*-dimethyl phosphorothioate
003125 OR–77–0019	Meta-Systox-R Spray Concentrate	*S*-(2-(Ethylsulfinyl)ethyl) *O,O*-dimethyl phosphorothioate
003125 OR–79–0067	Meta-Systox-R Spray Concentrate	*S*-(2-(Ethylsulfinyl)ethyl) *O,O*-dimethyl phosphorothioate
003125 OR–89–0004	Metasystox-R Spray Concentrate	*S*-(2-(Ethylsulfinyl)ethyl) *O,O*-dimethyl phosphorothioate
003125 WA–77–0014	Meta-Systox-R Spray Concentrate	*S*-(2-(Ethylsulfinyl)ethyl) *O,O*-dimethyl phosphorothioate
003125 WA–77–0058	Meta-Systox-R Spray Concentrate	*S*-(2-(Ethylsulfinyl)ethyl) *O,O*-dimethyl phosphorothioate
003125 WA–80–0077	Meta-Systox-R Spray Concentrate	*S*-(2-(Ethylsulfinyl)ethyl) *O,O*-dimethyl phosphorothioate
003125 WA–85–0003	Meta-Systox-R Spray Concentrate	*S*-(2-(Ethylsulfinyl)ethyl) *O,O*-dimethyl phosphorothioate
003125 WA–89–0033	Metasystox-R Spray Concentrate	*S*-(2-(Ethylsulfinyl)ethyl) *O,O*-dimethyl phosphorothioate
003377–00033	Admaquat 14–50	Alkyl* dimethyl benzyl ammonium chloride *(95%C_{14}, 3%C_{12}, 2%C_{16})
004816–00240	Dri-Die Insecticide	Silica gel
005197–00008	Quikcide Insecticide.	*N*-Octyl bicycloheptene dicarboximide
		(Butylcarbityl)(6-propylpiperonyl) ether 80% and related compounds 20%
		Pyrethrins
005197–00025	Quikcide Contact Insecticide	(Butylcarbityl)(6-propylpiperonyl) ether 80% and related compounds 20%
		Pyrethrins
005197–00031	Kem Quikcide Concentrate Insecticide	*N*-Octyl bicycloheptene dicarboximide
		(Butylcarbityl)(6-propylpiperonyl) ether 80% and related compounds 20%
		Pyrethrins

TABLE 1. — REGISTRATIONS WITH PENDING REQUESTS FOR CANCELLATION—Continued

Registration No.	Product Name	Chemical Name
005197–00035	Kem Kill-B Aerosol	*o*-Isopropoxyphenyl methylcarbamate
		N-Octyl bicycloheptene dicarboximide
		(Butylcarbityl)(6-propylpiperonyl) ether 80% and related compounds 20%
		Pyrethrins
005197–00036	Kem Kill-B	*o*-Isopropoxyphenyl methylcarbamate
		N-Octyl bicycloheptene dicarboximide
		(Butylcarbityl)(6-propylpiperonyl) ether 80% and related compounds 20%
		Pyrethrins
005197–00046	Norkem 400T	Dimethylamine 3,6-dichloro-*o*-anisate
		Dimethylamine 2,4-dichlorophenoxyacetate
		Dimethylamine 2-(2-methyl-4-chlorophenoxy)propionate
005197–00049	Kemsect	2-Methyl-4-oxo-3-(2-propenyl)-2-cyclopenten-1-yl *d*-trans-2,2-dimethyl-
		(5-Benzyl-3-furyl)methyl 2,2-dimethyl-3-(2-methylpropenyl)cyclopropanecarboxylate
005197–00057	Sniper	2-Methyl-4-oxo-3-(2-propenyl)-2-cyclopenten-1-yl *d*-trans-2,2-dimethyl-
		N-Octyl bicycloheptene dicarboximide
		O,O-Diethyl *O*-(3,5,6-trichloro-2-pyridyl) phosphorothioate
005197–00058	Sniper Concentrate	2-Methyl-4-oxo-3-(2-propenyl)-2-cyclopenten-1-yl *d*-trans-2,2-dimethyl-
		N-Octyl bicycloheptene dicarboximide
		O,O-Diethyl *O*-(3,5,6-trichloro-2-pyridyl) phosphorothioate
007053–00017	Fremont 9929 Microbiocide	Potassium *N*-methyldithiocarbamate
		Disodium cyanodithioimidocarbonate
007053–00018	Fremont 9927 Microbiocide	Potassium *N*-methyldithiocarbamate
		Disodium cyanodithioimidocarbonate
008220–00055	Victory Formula Flea and Tick Pump Spray for Dogs	Pyrethrins
		Cyclopropanecarboxylic acid, 3-(2,2-dichloroethenyl)-2,2-dimethyl-,
010807–00097	Repco Kill Liquid Weed Killer	5-Bromo-3-sec-butyl-6-methyluracil
		Propylene glycol butyl ether 2,4-dichlorophenoxyacetate
011541–00013	O'B-Alge-105	2,2-Dibromo-3-nitrilopropionamide
011715–00048	Speer Indoor Plant Spray	(Butylcarbityl)(6-propylpiperonyl) ether 80% and related compounds 20%
		Pyrethrins
		Rotenone
		Cube Resins other than rotenone
012480–00002	B 48–8 Algae Treatment	Potassium *N*-methyldithiocarbamate
		Disodium cyanodithioimidocarbonate
034891–00004	CWB-4220 (Anti-Microbial)	Potassium *N*-methyldithiocarbamate
		Disodium cyanodithioimidocarbonate
038526–00004	Kleenaseptic-B	Isopropanol
		Diisobutylphenoxyethoxyethyl dimethyl benzyl ammonium chloride
039398–00009	Sumithion 40 WDP	*O,O*-Dimethyl *O*-(4-nitro-*m*-tolyl) phosphorothioate
039398–00028	Sumithion 50 EC	*O,O*-Dimethyl *O*-(4-nitro-*m*-tolyl) phosphorothioate
059639–00072	Naled 8 Insecticide	1,2-Dibromo-2,2-dichloroethyl dimethyl phosphate
059639–00074	Naled 85 Concentrate Insecticide	1,2-Dibromo-2,2-dichloroethyl dimethyl phosphate
059907–00002	Techban 2002	Potassium *N*-methyldithiocarbamate
		Disodium cyanodithioimidocarbonate

Unless a request is withdrawn by the registrant within 90 days of publication of this notice, orders will be issued cancelling all of these registrations. Users of these pesticides or anyone else desiring the retention of a registration should contact the applicable registrant directly during this 90–day period. The following Table 2, includes the names

and addresses of record for all registrants of the products in Table 1, in sequence by EPA Company Number.

TABLE 2. — REGISTRANTS REQUESTING VOLUNTARY CANCELLATION

EPA Company No.	Company Name and Address
000192	Dexol Industries, 1450 W. 228th St., Torrance, CA 90501.
000239	Solaris Group of Monsanto Co., The Box 5006, San Ramon, CA 94583.
000264	Rhone-Poulenc Ag Co., Box 12014, Research Triangle Park, NC 27709.
000802	Chas. H. Lilly Co, The Box 83179, Portland, OR 97283.
001448	Buckman Labs Inc., 1256 Mclean Blvd, Memphis, TN 38108.
001450	Estes Chemicals Inc., Box 8287, Wichita Falls, TX 76307.
001769	NCH Corp., 2727 Chemsearch Blvd., Irving, TX 75062.
002205	Dadant & Sons Inc., 102 Broadway, Hamilton, IL 62341.
002935	Wilbur Ellis Co., 191 W. Shaw Ave, Fresno, CA 93704.
003125	Miles Inc., Agriculture Division, 8400 Hawthorn Rd., Box 4913, Kansas City, MO 64120.
003377	Albemarle Corp., 451 Florida Blvd, Baton Rouge, LA 70801.
004816	Agrevo Environmental Health, 95 Chestnut Ridge Rd., Montvale, NJ 07645.
005197	Systems General, Inc., Box 152170, Irving, TX 75015.
007053	Fremont Industries, Box 67, Shakopee, MN 55379.
008220	Carter-Wallace, Inc., Lambert Kay Division, Box 1418, Cranbury, NJ 08512.
010182	Zeneca Ag Products, Box 15458, Wilmington, DE 19850.
010807	Amrep, Inc., 990 Industrial Dr., Marietta, GA 30062.
011541	O'Brien Industries Inc., 10574 Ravenna Rd., Twinsburg, OH 44087.
011715	Speer Products Inc., Box 18993, Memphis, TN 38181.
012480	Heisler Green Chemical Co., 1116 W. 47th Place, Chicago, IL 60609.
034891	Mitco Water Labs, Inc., 1801 Hobbs Rd., Auburndale, FL 33823.
038526	Micro-Aseptic Products Inc., 887 E. Wilmette Rd., Palatine, IL 60067.
039398	Director of Insect Control & Research Inc., Agent For: Sumitomo Chemical America, Inc., 1330 Dillon Heights Ave, Baltimore, MD 21228.
059639	Valent U.S.A. Corp., 1333 N. California Blvd, Ste., 600, Walnut Creek, CA 94596.
059907	Chem-Tech International, 400 Termes Dr., Random Lake, WI 53075.

III. Loss of Active Ingredients

Unless the requests for cancellation are withdrawn, three pesticide active ingredients will no longer appear in any registered products. Those who are concerned about the potential loss of these active ingredients for pesticidal use are encouraged to work directly with the registrant to explore the possibility of their withdrawing the request for cancellation. These active ingredients are listed in the following Table 3, with the EPA Company and CAS Number.

TABLE 3. — ACTIVE INGREDIENTS WHICH WOULD DISAPPEAR AS A RESULT OF REGISTRANTS' REQUESTS TO CANCEL

CAS No.	Chemical Name	EPA Company No.
13171–21–6	Phosphamidon	002935
53404–22–1	2-(*m*-Chlorophenoxy)propionic acid, sodium salt	000264
1320–18–9	Propylene glycol butyl ether 2,4-dichlorophenoxyacetate	010807

IV. Procedures for Withdrawal of Request

Registrants who choose to withdraw a request for cancellation must submit such withdrawal in writing to James A. Hollins, at the address given above, postmarked before October 3, 1995. This written withdrawal of the request for cancellation will apply only to the applicable 6(f)(1) request listed in this notice. If the product(s) have been subject to a previous cancellation action, the effective date of cancellation and all other provisions of any earlier cancellation action are controlling. The withdrawal request must also include a commitment to pay any reregistration fees due, and to fulfill any applicable unsatisfied data requirements.

V. Provisions for Disposition of Existing Stocks

The effective date of cancellation will be the date of the cancellation order. The orders effecting these requested cancellations will generally permit a registrant to sell or distribute existing stocks for 1 year after the date the cancellation request was received. This

policy is in accordance with the Agency's statement of policy as prescribed in **Federal Register** No. 123, Vol. 56, dated June 26, 1991. Exceptions to this general rule will be made if a product poses a risk concern, or is in noncompliance with reregistration requirements, or is subject to a data call-in. In all cases, product-specific disposition dates will be given in the cancellation orders.

Existing stocks are those stocks of registered pesticide products which are currently in the United States and which have been packaged, labeled, and released for shipment prior to the effective date of the cancellation action. Unless the provisions of an earlier order apply, existing stocks already in the hands of dealers or users can be distributed, sold or used legally until they are exhausted, provided that such further sale and use comply with the EPA-approved label and labeling of the affected product(s). Exceptions to these general rules will be made in specific cases when more stringent restrictions on sale, distribution, or use of the products or their ingredients have already been imposed, as in Special Review actions, or where the Agency has identified significant potential risk concerns associated with a particular chemical.

List of Subjects

Environmental protection, Pesticides and pests, Product registrations.

Dated: June 15, 1995.

Frank Sanders,

Director, Program Management and Support Division, Office of Pesticides Program.

[FR Doc. 95–16188 Filed 7–3–95; 8:45 am]

BILLING CODE 6560–50–F

[FRL–5250–8]

Availability of Proposed Approval Decision and List under CWA 303(d)

AGENCY: U.S. Environmental Protection Agency, Region VII.

ACTION: Notice of availability.

SUMMARY: This notice announces the availability of the list for the state of Iowa pursuant to CWA section 303(d)(2) as well as EPA's proposed approval and disapproval decisions, and requests public comment.

DATES: Comments must be submitted to EPA on or before August 4, 1995.

ADDRESSES: Copies of these items can be obtained by writing or calling Jerome Pitt; U.S. Environmental Protection Agency Region VII; Water Management Division; 726 Minnesota Ave.; Kansas City, Kansas 66101; Phone: 913.551.7766; FAX: 913.551.7765. Comments on these items should be sent to Jerome Pitt, U.S. Environmental Protection Agency Region VII; Water Management Division; 726 Minnesota Ave.; Kansas City, Kansas 66101.

FOR FURTHER INFORMATION CONTACT:

Jerome L. Pitt at 913.551.7766.

SUPPLEMENTARY INFORMATION: Section 303(d) of the Clean Water Act (CWA) requires that each State identify these waters for which existing required pollution controls are not stringent enough to implement State water quality standards. For those waters, states are required to establish total maximum daily loads (TMDLs) according to priority ranking. The identified waters and loads are required to be submitted to the U.S. Environmental Protection Agency (EPA) for approval from ''time to time.''

On January 11, 1985 EPA published a final rule [50 FR 1775] that established 40 CFR part 130 (Water Quality Planning and Management). This rule established certain requirements for State and local government water quality programs, including requirements related to the implementation of section 303(d) of the CWA. The regulation did not specify dates for State compliance with the section 303(D) requirements, but reiterated the statutory provision calling for submission from time to time. On July 24, 1992, EPA published a final rule [57 FR 33040] that amended 40 CFR 130.7 to establish that, for the purposes of identifying water-quality limited waters still requiring TMDLs must also include a priority ranking and must identify the waters targeted for TMDL development during the next two years.

Consistent with EPA's amended regulation Iowa has submitted to EPA for approval their list decisions under section 303(d)(2). EPA today proposes to approve this list submitted by Iowa and solicit public comments on the approval decision and on the state list.

Dated: June 14, 1995.

Kenneth S. Buchholz,

Acting Director Water, Wetlands, and Pesticides Division, U.S. EPA Region VII.

[FR Doc. 95–16280 Filed 7–3–95; 8:45 am]

BILLING CODE 6560–50–M

[FRL–5250–3]

Final General NPDES Permit for Seafood Processors in the State Waters of Alaska and in Receiving Waters Adjacent to Alaska and Extending Out 200 Nautical Miles from the Coast and Baseline of Alaska: Alaskan Seafood Processors General NPDES Permit (No. AKG–52–0000)

AGENCY: Environmental Protection Agency, Region 10.

ACTION: Notice of Final General NPDES Permit.

SUMMARY: The Director, Water Division, EPA Region 10, is reissuing General National Pollutant Discharge Elimination System (NPDES) permit no. AK–G52–0000 for seafood processors in Alaska pursuant to the provisions of the Clean Water Act, 33 U.S.C. 1251 *et seq.* The General NPDES permit authorizes discharges from offshore, nearshore and shore-based vessels and onshore facilities engaged in the processing of fresh, frozen, canned, smoked, salted and pickled seafoods. The permit also authorizes discharges from offshore vessels (operating more than one nautical mile from shore at MLLW) that are engaged in the processing of seafood paste, mince or meal. The permit authorizes discharges of processing wastes, process disinfectants, sanitary wastewater and other wastewaters, including domestic wastewater, cooling water, boiler water, gray water, freshwater pressure relief water, refrigeration condense, water used to transfer seafood to a facility, and live tank water. The permit authorizes discharges to waters of the United States in and contiguous to the State of Alaska, except for receiving waters excluded from coverage as protected, special, at-risk, degraded or adjacent to a designated ''seafood processing center.''

The general NPDES permit for seafood processors in Alaska does not authorize discharges from nearshore or shore-based seafood processors of mince, paste or meal (operating one nautical mile or less from shore at MLLW). The permit does not authorize discharges of petroleum hydrocarbons, toxic pollutants, or other pollutants not specified in the permit. The permit does not authorize discharges to waters excluded from coverage as protected, special, at-risk, degraded or adjacent to a designated ''seafood processing center.''

Notice of the draft Alaskan seafood processors general NPDES permit was published July 28, 1994 in the **Federal Register** [59 FR 38473] and the Anchorage Daily News, the Juneau Empire and the Seattle Times.

The final permit is printed below and establishes effluent limitations, standards, prohibitions, monitoring requirements and other conditions on discharges from seafood processors in the area of coverage. The conditions are based on material contained in the administrative record, including an ocean discharge criteria evaluation, an environmental assessment, a finding of no significant impact, and a biological evaluation of potential effects on threatened and endangered species. Changes made in response to public comments are addressed in full in a document entitled ''Response to Public Comments on the Proposed Reissuance of the Alaskan Seafood Processors General NPDES Permit.'' This document in being sent to all commenters, current permittees and applicants and is available to other parties from the address below upon request.

EFFECTIVE DATE: The general NPDES permit shall become effective August 4, 1995.

ADDRESSES: Unless otherwise noted in the permit, correspondence regarding this permit should be sent to Environmental Protection Agency, Region 10, Attn: Wastewater Branch, WD–134, 1200 Sixth Avenue, Seattle, Washington, 98101.

FOR FURTHER INFORMATION CONTACT: Burney Hill or Florence Carroll, of EPA Region 10, at the address listed above or telephone (206) 553–1761 or 553–1760 respectively. Copies of the final general NPDES permit, response to public comments and today's publication will be provided upon request by the EPA Region 10 Public Information Center at 1–800–424–4372 or 206–553–1200.

SUPPLEMENTARY INFORMATION: EPA reissues this general NPDES permit pursuant to its authority under Sections 301(b), 304, 306, 307, 308, 401, 402, 403 and 501 of the Clean Water Act. The fact sheet for the draft permit, the response to comments document, the ocean discharge criteria evaluation, the biological evaluation, the environmental assessment, the 401 certification issued by the State of Alaska, and the coastal zone management plan consistency determination issued by the State of Alaska set forth the principal facts and the significant factual, legal and policy questions considered in the development of the terms and conditions of the final permit presented below.

The State of Alaska, Department of Environmental Conservation, has certified that the subject discharges comply with the applicable provisions of Sections 208(e), 301, 302, 303, 306 and 307 of the Clean Water Act.

The State of Alaska, Office of Management and Budget, Division of Governmental Coordination, has certified that the general NPDES permit is consistent with the approved Alaska Coastal Management Program.

Changes have been made from the draft permit to the final permit in response to public comments received on the draft permit, the final coastal management plan consistency determination from the State of Alaska, and the final 401 certification issued by the State of Alaska.

The following identifies several specific areas of change, among others, which have been embodied in the final permit: the areas excluded from coverage do not include the proposed category ''special resource waters of Alaska'' and have been expanded to include national wilderness areas, seabird colonies larger than 1,000 individuals, Udagak Bay, Ward Cove and the coastal seas of the Pribilof Islands; offshore seafood processors (discharging more than one nautical mile from shore) are required to develop and operate in accordance with a best management practices plan; one acre zones of deposit are authorized by the State of Alaska; circular mixing zones with radii of 100, 200 and 300 feet are authorized respectively for onshore, nearshore and offshore seafood processors by the State of Alaska; dive surveys are required for discharges of more than 7 days to receiving waters within one nautical mile of shore and in less than 20 fathoms of depth; requests for waivers from the monitoring of the seafloor, sea surface and shoreline are allowed; and an appendix describes the areas excluded from coverage under the permit in detail.

Within 120 days following this service of notice of EPA's final permit decision under 40 CFR 124.15, any interested person may appeal the general NPDES permit in the Federal Court of Appeal in accordance with Section 509(b)(1) of the Clean Water Act. Persons affected by a general NPDES permit may not challenge the conditions of the permit as a right of further EPA proceedings. Instead, they may either challenge this permit in court or apply for an individual NPDES permit and then request a formal hearing on the issuance or denial of an individual permit.

Dated: June 21, 1995.

Janis Hastings,

Acting Director, Water Division.

BILLING CODE 6560–50–M

Authorization To Discharge Under The National Pollutant Disharge Elimination System For Seafood Processors In Alaska

[General Permit No.: AKG–52–0000]

In compliance with the provisions of the Clean Water Act, 33 U.S.C. 1251 *et seq.* (hereafter, CWA or the Act), the owners and operators of seafood processing facilities described in Part I of this general National Pollutant Discharge Elimination System (NPDES) Permit are authorized to discharge seafood processing wastes and the concomitant wastes set out in Part II of this Permit to waters of the United States, except those excluded from authorization of discharge in Part III of this Permit, in accordance with effluent limitations, monitoring requirements and other conditions set forth herein. The discharge of wastes not specifically set out in Part II of this permit is not authorized under this permit.

The general NPDES permit AK–G52–0000 reissued in 1989 is invalid as of the effective date of this reissued permit, except as provided for in the State of Alaska Consistency Conditions.

A copy of this general permit must be kept at the seafood processors facility where the discharges occur.

This permit shall become effective August 4, 1995.

This permit and the authorization to discharge shall expire at midnight, 5 years from the effective date of the permit.

Signed this 21st day of June.

Janis Hastings,

Acting Director, Water Division, Region 10, U.S. Environmental Protection Agency.

Table of Contents

Cover Page
I. Authorized Facilities
II. Authorized Discharges
III. Areas Excluded From Authorization Under This General NPDES Permit
A. Protected Water Resources and Special Habitats
B. At-risk water resources and waterbodies
C. Degraded waterbodies
D. Designated fish processing center
E. Waiver
IV. Application to be Permitted Under This General NPDES Permit
A. Submittal of a Notice of Intent to be covered under this general NPDES permit
B. What constitutes a ''timely'' submittal of a Notice of Intent
C. What constitutes a ''complete'' submittal of a Notice of Intent
D. How does an applicant request a waiver to discharge in an excluded area under this general NPDES permit
V. Categories of Permittees and Requirements
A. Offshore seafood processors
B. Nearshore seafood processors

C. Shore-based seafood processors
VI. Specific Waste Minimization and Monitoring Requirements
A. Best management practices plan
B. Annual report
C. Seafloor monitoring requirements
D. Sea surface and shoreline monitoring requirements
VII. Recording and Reporting Requirements
A. Records contents
B. Retention of records
C. Twenty-four hour notice of noncompliance reporting
D. Other noncompliance reporting
VIII. Compliance Responsibilities
A. Duty to comply
B. Penalties for violations of permit conditions
C. Need to halt or reduce activity not a defense
D. Duty to mitigate
E. Proper operation and maintenance
F. Bypass of treatment facilities
G. Upset conditions
H. Planned changes
I. Anticipated noncompliance
IX. General Provisions
A. Permit actions
B. Duty to reapply
C. Duty to provide information
D. Incorrect information and omissions
E. Signatory requirements
F. Availability of reports
G. Inspection and entry
H. Oil and hazardous substance liability
I. Property rights
J. Severability
K. Transfers
L. State laws
M. Reopener clause
X. DEFINITIONS and ACRONYMS
APPENDIX: List of Areas Excluded from Coverage
ATTACHMENT: State Consistency Conditions

Authorized Facilities

Subject to the restrictions of Part III of this Permit (excluded areas), the following categories of dischargers are authorized to discharge the pollutants set out in Part II of this permit once a Notice of Intent has been filed with, and an authorization is received from, EPA.

A. Owners and operators of the facilities operating offshore or nearshore vessels, and shore-based vessels or onshore facilities engaged in the processing of fresh, frozen, canned, smoked, salted or pickled seafoods.

B. Owners and operators of the facilities operating offshore vessels that are engaged in the processing of seafood paste, mince or meal.

Shore-based and nearshore seafood processors discharging seafood paste, mince or meal process wastes to receiving waters within one (1) nautical mile of shore at MLLW are not authorized to discharge under this general NPDES permit.

Operations which catch and process seafood and which discharge less than one thousand (1,000) pounds of seafood waste per day and less than fifteen tons (30,000 lbs) of seafood waste per year may be but are not required to be covered under this general NPDES permit.

II. Authorized Discharges

A. This Permit authorizes the discharge of the following pollutants subject to the limitations and conditions set forth herein:

Seafood process wastes;
Process disinfectants;
Sanitary wastewater; and

D. Other wastewaters, including domestic wastewater, cooling water, boiler water, gray water, freshwater pressure relief water, refrigeration condensate, water used to transfer seafood to the facility, and live tank water.

The discharge of wastes not specifically set out in this Part is not authorized under this Permit.

III. Areas Excluded From Authorization Under This General NPDES Permit

Subject to the waiver provision set out in Part III.E below, this Permit does not authorize the discharge of pollutants in the following circumstances.

A. Protected Water Resources and Special Habitats

This Permit does not authorize the discharge of pollutants in the protected water resources and special habitats as described below and listed in the Appendix.

1. Within one (1) nautical mile of a State Game Sanctuary, State Game Refuge or State Critical Habitat.
2. Within one (1) nautical mile of a National Park or Preserve.
3. Within one (1) nautical mile of a National Wildlife Refuge.
4. Within one (1) nautical mile of a National Wilderness Area.
5. Within three (3) nautical miles of the seaward boundary of a rookery or major haul-out area of the Steller sea lion which has been designated as ''critical habitat'' by the National Marine Fisheries Service (NMFS).
6. Within one (1) nautical mile of the seaward boundary of a rookery of the northern fur seal during the period May 1 through November 15.
7. Within one (1) nautical mile of the seaward boundary of a nesting area of a colony of one thousand or more of the following seabirds during the period May 1 through September 30: auklets, cormorants, fulmars, guillemots, kittiwakes, murrelets, murres, puffins and/or terns.
8. In a river designated as wild or scenic under the Wild and Scenic Rivers Act.

B. At-risk Water Resources and Waterbodies

This Permit does not authorize the discharge of pollutants in the following at-risk water resources and waterbodies.

1. Areas with water depth of less than ten (10) fathoms mean lower low water (MLLW) that have or are likely to have poor flushing, including but not limited to sheltered waterbodies such as bays, harbors, inlets, coves and lagoons and semi-enclosed water basins bordered by sills of less than ten (10) fathom depth. For the purposes of this section, ''poor flushing'' means average currents or turbulence of less than one third (0.33) of a knot at any point in the receiving water within three hundred (300) feet of the outfall.
2. Akun Island: Lost Harbor.
3. Streams or rivers within one (1) statute mile upstream of a permanent drinking water intake.
4. Lakes or other impoundments of fresh water.

C. Degraded Waterbodies

This Permit does not authorize the discharge of pollutants in the following degraded waterbodies.

1. Akutan Island: Akutan Harbor west of longitude 165°46'00'' W.
2. Unalaska Island: Unalaska Bay and continuous inshore waters south of latitude 53°57'50'' N.
3. Udagak Bay: waters of the bay from a line extending between latitude 53°44'32''N, longitude 166°19'14''W and latitude 53°44'04''N, longitude 166°18'32''W.
4. Ward Cove.
5. Any waterbody included in ADEC's CWA § 305(b) report or CWA § 303(d) list of waters which are ''impaired'' by seafood processor discharges or ''water quality-limited'' for dissolved oxygen or residues (i.e., floating solids, debris, sludge, deposits, foam or scum).

D. Designated Fish Processing Center

This Permit does not authorize the discharge of pollutants to receiving waters adjacent to the City of Kodiak, including Kodiak Harbor, St. Paul Harbor, Near Island Channel, Women's Bay and Woody Island Channel.

E. Waiver

An owner or operator of a seafood processing facility may request a waiver to discharge under this Permit in the excluded areas listed in Parts III.A.-D. above. In order to obtain a waiver to discharge in one or more of these excluded areas, an applicant must submit a timely and complete request for a waiver in accordance with the requirements listed in Part IV.D. below. Pre-existing, permanent onshore siting

may be considered justification for a waiver.

A waiver will not be granted until after consultation between EPA, ADEC and other appropriate government offices to determine that the proposed discharge will comply with applicable State and federal laws and regulations and State-approved Coastal Zone Management Plans.

IV. Application To Be Permitted Under This General NPDES Permit

In order to be authorized to discharge any of the pollutants set out in Part II above to waters of the United States under this general NPDES permit, one must apply for coverage under this Permit. This general NPDES permit does not authorize any discharges from facilities that have not applied for and received permission to discharge under this Permit from EPA.

A. Submittal of a Notice of Intent to be Covered Under This General NPDES Permit

An applicant wishing authorization to discharge under this Permit shall submit a timely and complete Notice of Intent (NOI) to EPA and ADEC in accordance with the requirements listed below. A qualified applicant will be authorized to discharge under this Permit upon its certified receipt from EPA of written notification of inclusion and the assignment of an NPDES permit number.

EPA may require any discharger applying for coverage under this general NPDES permit to apply for and obtain an individual NPDES permit in accordance with Code of Federal Regulations (CFR) Vol. 40, Section 122.28(b)(3).

A permittee authorized to discharge under this Permit shall submit to EPA and ADEC an updated and amended NOI when there is any material change in the information submitted within its original NOI.

In compliance with the Paperwork Reduction Act, 44 U.S.C. 3501 *et seq.* the Office of Management and Budget has approved the information in a Notice of Intent for permit application (OMB No. 2040–0086).

A permittee shall submit its Notice of Intent to be covered under this general NPDES permit to:

U.S. Environmental Protection Agency Region 10, NPDES Compliance (WD–135), 1200 Sixth Avenue, Seattle, Washington 98101

and, to the responsible ADEC office at

Alaska Department of Environmental Conservation, Southeastern Regional Office, 410 Willoughby Avenue, Suite 105, Juneau, Alaska 99801 Attention: Wastewater Program

Alaska Department of Environmental Conservation, Southcentral Regional Office, 3601 C Street, Suite 1334, Anchorage, Alaska 99503, Attention: Wastewater Program

or

Alaska Department of Environmental Conservation, Western District Office, Unalaska Field Office, P.O. Box 1071, Unalaska, Alaska 99692, Attention: Wastewater Program

B. What constitutes a ''timely'' submittal of a Notice of Intent

1. A new permittee seeking coverage under this Permit shall submit an NOI at least 60 days prior to commencement of operation and discharge.

2. An existing permittee authorized to discharge under the general NPDES permit for seafood processors, effective for the period October 30, 1989, through October 31, 1994, should submit an NOI at least 60 days prior to the expiration of that permit and shall submit an NOI no later than 60 days after the effective date of this Permit.

3. An existing permittee authorized to discharge under an individual NPDES permit and applying for authorization to discharge pollutants under this Permit should submit an NOI at least 60 days prior to the desired date of authorization to discharge under this Permit and at least 180 days prior to the expiration date of the individual NPDES permit.

C. What Constitutes a ''Complete'' Submittal of a Notice of Intent

1. Permit Information

An NOI shall include any NPDES number(s) currently or previously assigned to the facility and the ADEC seafood processor license number.

2. Owner Information

An NOI shall include the name and the complete address and telephone number of the owner of the facility and the name of its duly authorized representative. If a facsimile machine is available at this address, it is useful to provide a FAX number.

3. Company Information

a. An NOI shall include the name and the complete address and telephone number of the company operating the facility and the name of its duly authorized representative. If a facsimile machine is available at this address, it is useful to provide a FAX number.

4. Facility Information

a. An NOI shall include the name, address and telephone number of the facility. If the name of the facility has changed during the last five years, the NOI shall include the previous name(s) of the facility and the date(s) of these changes. If a facsimile machine is available at this address, it is useful to provide a FAX number.

b. For nearshore and shore-based facilities, an NOI shall include a description of the physical location of the facility and its accurate location in terms of latitude and longitude with a precision of at least 15 seconds of a degree (≈ 0.25 mile). In addition, the NOI should provide the Alaska Department of Fish and Game's (ADFG) Fishery Management Areas in which a facility will operate and discharge.

The NOI shall also include an area map of the facility and its outfall(s). This map shall be based upon an official map or chart of the National Oceanic and Atmospheric Administration (NOAA) or the U.S. Geologic Survey (USGS) of a scale of resolution of from 1:20,000 to 1:65,000.

c. An NOI should include the number of seasonal and annual employees of the facility.

d. For floating facilities, an NOI shall include the U.S. Coast Guard (USCG) vessel number, the type, length and date of purchase of the vessel, and the ADFG Fishery Management Area(s) in which a facility will operate and discharge.

5. Facility Classification

An NOI shall include the classification(s) of the facility as one or more of the following categories of seafood processors.

a. *Offshore seafood processor:* a processor operating and discharging more than one (1) nautical mile from shore at MLLW.

b. *Nearshore seafood processor:* a processor operating and discharging from one (1) to one half (0.5) nautical mile from shore at MLLW.

c. *Shore-based seafood processor:* a processor operating and discharging less than one half (0.5) nautical mile from shore at MLLW.

6. Production Information

An NOI shall include projected production data based upon historical operations and design capacity. Production data includes an identification of the process applied to the product, the name and quantity of the raw product(s) by species, the type of the finished product(s), and the maximum quantity of each raw product which can be processed in a 24-hour day. The NOI shall also include the projected processing location(s) and number of operating days by month for the facility.

7. Receiving Water Information

An NOI shall include the name(s) of the waterbody(ies) receiving the discharges of the facility and the name of any larger, adjacent receiving waterbody.

The NOI shall include information concerning any areas within three (3) nautical miles which are excluded from coverage under the Permit in Part III above.

For nearshore and shore-based processors, an NOI shall include a bathymetric map of the receiving water within one (1) nautical mile of the discharge.

8. Description of Discharge(s)

An NOI shall include the depth at MLLW and distance from shore at MLLW of the end of the outfall pipe at which the effluent is discharged.

An NOI shall include information concerning all the discharges from the facility.

a. Sanitary wastes. The NOI shall identify the type and capacity of the sanitary wastewater treatment system.

b. Seafood process wastes. The NOI shall include a list of the number, type, waste solids weights and wastewater volumes of each discharge and the maximum quantity of process wastes which can be produced in a 24-hour day. Discharges should be described in terms of specific seafood products processed and component wastewaters on a monthly basis for one year of operation.

c. Other wastewaters. The NOI shall include information on process disinfectants, domestic wastewater, cooling water, boiler water, refrigeration condensate, transfer water, graywater, live tank water and freshwater pressure relief water.

9. Signatory Requirements.

All permit applications shall be signed as follows:

a. For a corporation: by a principal corporate officer.

b. For a partnership or sole proprietorship: by a general partner or the proprietor, respectively.

c. For a municipality, state, federal, or other public agency: by either a principal executive officer or ranking elected official.

D. How Does an Applicant Request a Waiver to Discharge in an Excluded Area Under This General NPDES Permit

An applicant who seeks a waiver of one or more of the requirements for discharge location in Part III above must submit a timely and complete request for a waiver in accordance with the following requirements.

1. A Notice of Intent to be authorized to discharge under this general NPDES permit in accordance with the requirements of Parts IV.A-C. above.

2. A detailed description of the circumstances requiring discharges to the excluded areas. This description should address alternatives to discharging within the excluded area.

3. A detailed description of the nature, magnitude and duration of the seafood processing operation and its discharges.

4. A detailed map showing the proposed facility location, outfall location, receiving water bathymetry, surrounding upland topography, and any protected water resources, special habitats or areas listed in Part III above which are located within three (3) nautical miles of the site or its outfall. This area map of the facility and its outfall(s) shall be based upon an official map or chart of NOAA or USGS of a scale of resolution from 1:20,000 to 1:65,000.

5. A description of how and why the discharges will not cause a violation of State water quality standards, including antidegradation, in the receiving waters [Alaska Administrative Code (AAC) Vol. 18, Part 70].

6. A description of how and why the discharges will not cause a significant degradation of the physical, chemical or biological integrity of the receiving water, including but not limited to seafloor deposits of settleable residues, shoreline deposits of residues and increased mortality in communities of marine life.

7. A description of how and why the discharges will not harm or impair the reproduction and growth of any threatened or endangered species within three (3) nautical miles of the proposed operation and discharge.

A waiver will not be granted until after consultation between EPA, ADEC and other appropriate government offices to determine that the proposed discharge will comply with applicable State and federal laws and regulations and State-approved Coastal Zone Management Plans.

V. Categories of Permittees and Requirements

A. Offshore Seafood Processors

(a processor operating and discharging more than one (1) nautical mile from shore at MLLW)

1. Effluent Limitations and Requirements

a. Amount of seafood process wastes. A permittee shall not discharge a volume or weight of seafood process wastes on a daily or annual basis which exceeds the amount reported in the permittee's Notice of Intent to be covered under this Permit.

b. Treatment and limitation of seafood process wastes. A permittee shall route all seafood process wastes through a waste-handling system. The waste solids discharged from the end of pipe shall not exceed one half (0.5) inch in any dimension.

c. Scupper and floor drain wastes. A permittee shall route all seafood process wastes from scuppers and floor drains through a waste-handling system. The waste solids discharged from the end of pipe shall not exceed one half (0.5) inch in any dimension.

d. Sanitary wastes. A permittee shall route all sanitary wastes through a sanitary waste system that meets the applicable Coast Guard pollution control standards then in effect (33 CFR part 159: ''Marine sanitation devices''). Nonfunctioning and undersized systems are prohibited.

e. Other wastewaters. A permittee shall not discharge any other such wastewaters that contain foam, floating solids, grease, or oily wastes which produce a sheen on the water surface, nor wastes which deposit residues which accumulate on the shoreline or sea floor. The incidental foam and scum produced by discharge of seafood transfer water must be minimized to the extent practicable as described in the best management practices plan of Part VI.A. Wastewaters which have not had contact with seafood process wastes are not required to be discharged through the seafood process waste-handling system.

f. State water quality standards (18 AAC Part 70). Discharges shall not violate Alaska Water Quality Standards for floating or suspended residues, dissolved oxygen, oil and grease, fecal coliform, pH, temperature, color, turbidity, and total residual chlorine beyond the mixing zone. For the purposes of offshore seafood processors, the mixing zone shall be measured as three hundred (300) feet radius from the point of discharge. Discharges shall not violate Alaska Water Quality Standards for settleable solid residues beyond a one (1) acre zone of deposit.

g. Additional wastes. A permittee is reminded of the requirement that vessels comply with 33 CFR part 151. (Vessels carrying oil, noxious liquid substances, garbage, municipal or commercial wastes, and ballast water).

h. Monitoring. A permittee shall monitor its processing and discharges to the extent necessary to develop and submit a timely and accurate annual report.

2. Best Management Practices Requirements

During the term of this Permit all permittees shall operate in accordance with a Best Management Practices Plan as described in Part VI.A. below.

3. Annual Reporting Requirements

During the term of this Permit all permittees shall prepare and submit an accurate and timely annual report of noncompliance, production, discharges and process changes as described in Part VI.B. below.

B. Nearshore Seafood Processors

(a processor operating and discharging from one (1) to one half (0.5) nautical mile from shore at MLLW)

1. Effluent Limitations and Requirements

a. Amount of seafood process wastes. A permittee shall not discharge a volume or weight of seafood process wastes on a daily or annual basis which exceeds the amount reported in the permittee's Notice of Intent to be covered under this Permit.

b. Treatment and limitation of seafood process wastes. A permittee shall route all seafood process wastes through a waste-handling system. The waste solids discharged from the end of pipe shall not exceed one half (0.5) inch in any dimension.

c. Scupper and floor drain wastes. A permittee shall route all seafood process wastes from scuppers and floor drains through a waste-handling system. The waste solids discharged from the end of pipe shall not exceed one half (0.5) inch in any dimension.

d. Sanitary wastes. A permittee shall route all sanitary wastes through a sanitary waste system that meets the applicable Coast Guard pollution control standards then in effect (33 CFR Part 159: ''Marine sanitation devices'']) Nonfunctioning and undersized systems are prohibited.

e. Other wastewaters. A permittee shall not discharge any other such wastewaters that contain foam, floating solids, grease, or oily wastes which produce a sheen on the water surface, nor wastes which deposit residues which accumulate on the shoreline or sea floor. The incidental foam and scum produced by discharge of seafood transfer water must be minimized to the extent practicable as described in the best management practices plan of Part VI.A. Wastewaters which have not had contact with seafood process wastes are not required to be discharged through the process waste-handling system.

f. Residues. A permittee shall not discharge seafood sludge, deposits, debris, scum, floating solids, oily wastes or foam which alone or in combination with other substances

(1) make the water unfit or unsafe for use in aquaculture, water supply, recreation, growth and propagation of fish, shellfish, aquatic life and wildlife, or the harvesting and consumption of raw mollusks or other raw aquatic life;

(2) cause a leaching of deleterious substances;

(3) cause a film, sheen, emulsion or scum on the surface of the water;

(4) cause a scum, emulsion, sludge or solid to be deposited on the adjoining shorelines; or

(5) cause a scum, emulsion, sludge or solid to be deposited on the bottom.

g. State water quality standards (18 AAC Part 70). Discharges shall not violate Alaska Water Quality Standards for floating or suspended residues, dissolved oxygen, oil and grease, fecal coliform, pH, temperature, color, turbidity, and total residual chlorine beyond the mixing zone. For the purposes of nearshore seafood processors, the mixing zone shall be measured as two hundred (200) feet radius from the point of discharge. Discharges shall not violate Alaska Water Quality Standards for settleable solid residues beyond a zone (1) acre zone of deposit.

h. Discharge pipe location. A permittee shall discharge its wastewaters at a point at least three (3) feet below the sea surface.

i. Additional wastes. A permittee is reminded of the requirement that vessels comply with 33 CFR part 151

(''Vessels carrying oil, noxious liquid substances, garbage, municipal or commercial wastes, and ballast water'').

j. Monitoring. A permittee shall monitor its processing and discharges to the extent necessary to develop and submit a timely and accurate annual report and to detect and minimize occurrences of noncompliance.

2. Best Management Practices Requirements

During the term of this Permit all permittees shall operate in accordance with a Best Management Practices Plan as described in Part VI.A. below.

3. Annual Reporting Requirements

During the term of this Permit all permittees shall prepare and submit an accurate and timely annual report of noncompliance, production, discharges and process changes as described in Part VI.B. below.

4. Seafloor Monitoring Requirements

During the term of this Permit all permittees classified as nearshore floating seafood processors and discharging to receiving waters of depths of less than twenty (20) fathoms at a fixed position for more than seven (7) days within a reporting year shall conduct a seafloor monitoring program as described in Part VI.C. below. A ''fixed position'' refers to a circular anchorage area of radius equal to one quarter (0.25) nautical mile.

5. Sea Surface and Shoreline Monitoring Requirements

During the term of this Permit all permittees classified as nearshore floating seafood processors shall conduct a daily sea surface and a weekly shoreline monitoring program as described below in Part VI.D. below.

C. Shore-based Seafood Processors

(a processor operating and discharging less than one half (0.5) nautical mile from shore at MLLW)

1. Effluent Limitations and Requirements

a. Amount of seafood process wastes. A permittee shall not discharge a volume or weight of seafood process wastes on a daily or annual basis which exceeds that reported in the permittee's Notice of Intent to be covered under this Permit.

b. Treatment and limitation of seafood process wastes. A permittee shall route all seafood process wastes through a waste-handling system. The waste solids discharged from the end of pipe shall not exceed one half (0.5) inch in any dimension.

c. Scupper and floor drain wastes. A permittee shall route all seafood process wastes from scuppers and floor drains through a waste-handling system. The waste solids discharged from the end of pipe shall not exceed one half (0.5) inch in any dimension.

d. Sanitary wastes. A permittee shall route all sanitary wastes through a sanitary waste treatment system. Nonfunctioning and undersized systems are prohibited.

Sanitary wastes must be either:

(1) Discharged to a shore-based septic system or a municipal wastewater treatment system,

(2) Treated prior to discharge to meet the secondary treatment limitations for biochemical oxygen demands (BOD_5) and total suspended solids (TSS) of 60 mg/1 daily maximum, 45 mg/1 weekly average, and 30 mg/1 monthly average, or,

(3) If a USGC-licensed vessel, treated prior to discharge by a sanitary waste system that meets the applicable Coast Guard pollution control standards then

in effect [33 CFR part 159: ''Marine sanitation devices'']. e. Other wastewaters. A permittee shall not discharge any other such wastewaters that contain foam, floating solids, grease, or oily wastes which produce a sheen on the water surface, nor wastes which deposit residues which accumulate on the shoreline or sea floor. The incidental foam and scum produced by discharge of seafood transfer water must be minimized to the extent practicable as described in the best management practices plan of Part VI.A. Wastewaters which have not had contact with seafood process wastes are not required to be discharged through the process waste-handling system.

f. Residues. A permittee shall not discharge seafood sludge, deposits, debris, scum, floating solids, oily wastes or foam which alone or in combination with other substances

(1) make the water unfit or unsafe for use in aquaculture, water supply, recreation, growth and propagation of fish, shellfish, aquatic life and wildlife, or the harvesting and consumption of raw mollusks or other raw aquatic life;

(2) cause a leaching of deleterious substances;

(3) cause a film, sheen, emulsion or scum on the surface of the water;

(4) cause a scum, emulsion, sludge or solid to be deposited on the adjoining shorelines; or

(5) cause a scum, emulsion, sludge or solid to be deposited on the bottom.

g. State water quality standards (18 AAC Part 70). Discharges shall not violate Alaska Water Quality Standards for floating or suspended residues, dissolved oxygen, oil and grease, fecal coliform, pH, temperature, color, turbidity, and total residual chlorine beyond the mixing zone. For the purposes of shore-based seafood processors, the mixing zone shall be measured as one hundred (100) feet radius from the point of discharge. Discharges shall not violate Alaska Water Quality Standards for settleable solid residues beyond a one (1) acre zone of deposit.

h.Discharge pipe location. A permittee discharging to marine water shall discharge its wastewaters at a point at least ten (10) feet below the surface of the receiving water. A permittee discharging to fresh water shall discharge its wastewaters at least three (3) feet below the surface of the receiving water. An applicant may request a waiver to this condition by providing a description of the circumstances which make this condition onerous and unnecessary to the protection of State water quality standards.

i. Monitoring. A permittee shall monitor its processing and discharges to the extent necessary to develop and submit a timely and accurate annual report and to detect and minimize occurrences of noncompliance.

2. Best Management Practices Requirements

During the term of this Permit all permittees shall operate in accordance with a Best Management Practices (BMP) Plan as described in Part VI.A. below.

3. Annual Reporting Requirements

During the term of this Permit all permittees shall prepare and submit an accurate and timely annual report of noncompliance, production, discharges and process changes as described in Part VI.B. below.

4. Seafloor Monitoring Requirements

During the term of this Permit all permittees classified as shore-based seafood processors and discharging to receiving waters of depths of less than twenty (20) fathoms at a fixed position for more than seven (7) days within a reporting year shall conduct a seafloor monitoring program as described in Part VI.C. below.

5. Sea Surface and Shoreline Monitoring Requirements

During the term of this Permit all permittees classified as shore-based seafood processors shall conduct a daily sea surface and daily shoreline monitoring program as described below in Part VI.D. below.

VI. Specific Waste Minimization and Monitoring Requirements

A. Best Management Practices Plan

1. Applicability

During the term of this Permit all permittees shall operate in accordance with a Best Management Practices (BMP) Plan.

2. Implementation

A permittee shall develop and implement a BMP Plan within 18 months of the date of that permittee's authorization to discharge under this Permit.

3. Purpose

Through imp lementation of a BMP Plan a permittee shall prevent or minimize the generation and discharge of wastes and pollutants from the facility to the waters of the United States. Pollution should be prevented or reduced at the source or recycled in an environmentally safe manner whenever feasible. Disposal of wastes into the environment should be conducted in such a way as to have a minimal environmental impact.

4. Objectives

A permittee shall develop its BMP Plan consistent with the following objectives.

a. The number and quantity of wastes and pollutants shall be minimized by a permittee to the extent feasible by managing each effluent waste stream in the most appropriate manner.

b. Any Standard Operating Procedures (SOPs) shall ensure proper operation and maintenance of the facility.

c. Evaluations for the control of wastes and pollutants shall include the following.

(1) Each facility component or system shall be examined for its waste minimization opportunities and its potential for causing a release of significant amounts of pollutants to receiving waters due to the failure or improper operation of equipment. The examination shall include all normal operations, including raw material and product storage areas, in-plant conveyance of product, processing and product handling areas, loading or unloading operations, spillage or leaks from the processing floor and dock, and sludge and waste disposal.

(2) Equipment shall be examined for potential failure and any resulting overflow of wastes and pollutants to receiving waters. Provision should be made for emergency measures to be taken in such an event.

5. Requirements

The BMP Plan shall be consistent with the purpose and objectives in Parts VI.B.3.-4. above.

a. The BMP Plan shall be documented in narrative form, shall include any necessary plot plans, drawings or maps, and shall be developed in accordance with good engineering practices. The BMP Plan shall be organized and written with the following structure:

(1) Name and location of the facility;

(2) Statement of BMP policy;

(3) Materials accounting of the inputs, processes and outputs of the facility;

(4) Risk identification and assessment of pollutant discharges;

(5) Specific management practices and standard operating procedures to achieve the above objectives, including, but not limited to,

(a) the modification of equipment, facilities, technology, processes and procedures, and

(b) the improvement in management, inventory control, materials handling or

general operational phases of the facility;

(6) Good housekeeping;

(7) Preventative maintenance;

(8) Inspections and records; and

(9) Employee training.

b. The BMP Plan shall include the following provisions concerning its review:

(1) Be reviewed by the facility manager and appropriate staff; and

(2) Include a statement that the above review has been completed and that the BMP Plan fulfills the requirements set forth in this Permit. The statement shall be certified by the dated signature of the facility manager.

Documentation

A permittee shall submit to EPA written certification, signed by a principal officer or a duly appointed representative of the permittee, of the completion and implementation of its BMP Plan. A permittee shall maintain a copy of its BMP Plan at its facility and shall make the plan available to EPA or ADEC upon request. All offices of a permittee which are required to maintain a copy of this Permit shall also maintain a copy of the BMP Plan.

7. BMP Plan Modification

A permittee shall amend the BMP Plan whenever there is a change in the facility or in the operation of the facility which materially increases the generation of pollutants and their release or potential release to the receiving waters. A permittee shall also amend the Plan, as appropriate, when facility operations covered by the BMP Plan change. Any such changes to the BMP Plan shall be consistent with the objectives and specific requirements listed above. All changes in the BMP Plan shall be reviewed by the facility manager.

8. Modification for Ineffectiveness

At any time, if a BMP Plan proves to be ineffective in achieving the general objective of preventing and minimizing the generation of pollutants and their release and potential release to the receiving waters and/or the specific requirements above, this Permit and/or the BMP Plan shall be subject to modification to incorporate revised BMP requirements.

B. Annual Report

1. Applicability

During the term of this Permit all permittees shall prepare and submit a complete, accurate and timely annual report of noncompliance, production, discharges and process changes to EPA and ADEC.

In compliance with the Paperwork Reduction Act, 44 U.S.C. § 3501 *et seq.* the Office of Management and Budget has approved the information in an annual report for compliance assessment (OMB No. 2040–0110).

2. Purpose and Objectives

The annual report serves to inform the regulatory agencies of the use and potential degradation of public water resources by facilities discharging pollutants to these receiving waters under this Permit. The permittee shall provide the following information.

(1) Verification of the permittee's NPDES permit number, facility owner, facility operator, name of the facility or vessel, mailing address, telephone number and facsimile number.

a. A summary of periods of noncompliance with any of the requirements of this Permit between January 1st through December 31st of the previous year, the reasons for such noncompliance, the steps taken to correct the problem and prevent further occurrences.

b. A summary of information of production and discharge during the previous year, including

(1) Dates of operation by month,

(2) Type and amount (lbs) of raw product per month,

(3) Type and amount (lbs) of finished product per month,

(4) Type and amount (lbs) of discharged residues per month, and

(5) Location of discharge (name of receiving water(s)). If a floating processor operating and discharging within three miles of shore for a continuous 24-hour period or more, the name of the receiving water(s) and the latitude and longitude, the date and the depth of the discharge location(s).

c. A statement of any changes to a permittee's Notice of Intent to be covered under this Permit (especially process changes, locations and production levels).

3. Signatory Requirements

A permittee shall ensure that the annual report is signed by a principal officer or a duly appointed representative of the permittee.

4. Submittal

A permittee shall submit its annual report by January 31st of the year following each year of operation and discharge under this Permit. A permittee shall submit its annual report to:

U.S. Environmental Protection Agency Region 10, NPDES Compliance (WD–135), 1200 Sixth Avenue, Seattle, Washington 98101

and, to the responsible ADEC office at

Alaska Department of Environmental Conservation, Southeastern Regional Office, 410 Willoughby Avenue, Suite 105, Juneau, Alaska 99801, Attention: Wastewater Program

Alaska Department of Environmental Conservation, Southcentral Regional Office, 3601 C Street, Suite 1334, Anchorage, Alaska 99503, Attention: Wastewater Program

or

Alaska Department of Environmental Conservation, Western District Office, Unalaska Field Office, P.O. Box 1071, Unalaska, Alaska 99692, Attention: Wastewater Program

Seafloor Monitoring Requirements

1. Applicability

During the term of this Permit all permittees classified as shore-based or nearshore seafood processors and discharging to receiving waters of depths of less than twenty (20) fathoms at a fixed position for more than seven (7) days shall conduct a seafloor monitoring program. A ''fixed position'' refers to a circular anchorage area of radius equal to one quarter (0.25) nautical mile.

2. Purpose

A permittee shall conduct a seafloor monitoring program to determine compliance with the Alaska water quality standards for settleable residues in marine waters. Alaska Administrative Code Part 18 § 70.020 states that ''(settleable residues) shall not * * * cause a sludge, solid, or emulsion to be deposited * * * on the bottom.''

ADEC has authorized a zone of deposit of up to a maximum area of one (1) acre for facilities permitted under this Permit in accordance with 18 AAC § 70.033.

3. Objective

The seafloor monitoring program shall determine the areal extent (in square feet) of the continuous deposit of sludge, solid or emulsion, any of which is one-half inch or thicker, on the bottom that persists throughout the year.

a. Monitoring shall provide an accurate estimate of the area of the discharge waste pile of settleable residues which persists throughout the year. It is recommended that such persistence can be determined by surveying the waste pile generated during the previous year prior to the recommencement of discharge.

b. Monitoring shall provide a determination of the outer boundary of the area of the discharge waste pile. It is recommended that such precision

will require a visual, photographic or video assessment.

4. Schedule

A permittee shall develop and implement a monitoring program to survey the area of its discharge waste pile during the first full year of coverage of its facility under this Permit.

Tiered Monitoring

The monitoring program shall be tiered in levels of increasing complexity which are determined by the area of the discharge waste pile as assessed in previous seafloor monitoring surveys.

Tier one survey. A permittee shall develop and implement a monitoring program to survey the area of its discharge waste pile during the first full year of the facility's coverage under this Permit. If a permittee has relocated its discharge pipe during the preceding year of operation and discharge, has added a new production line, or has increased production over the production of the year of the previous seafloor monitoring survey by more than 25%, then a permittee shall develop and implement a monitoring program to survey the area of its discharge waste pile during the current year of the facility's coverage under this Permit.

a. The tier one bottom survey shall be conducted along two transects. The principal transect shall be oriented along the maximum horizontal dimension of the waste pile (''the length''). The second transect (''the width'') shall be perpendicular to the principal transect, and shall cross it at the point where the waste pile is widest in that direction. The survey shall record and report the measurements of the distances of each transect under which any continuous part of the waste pile occurs.

BILLING CODE 6560–50–P

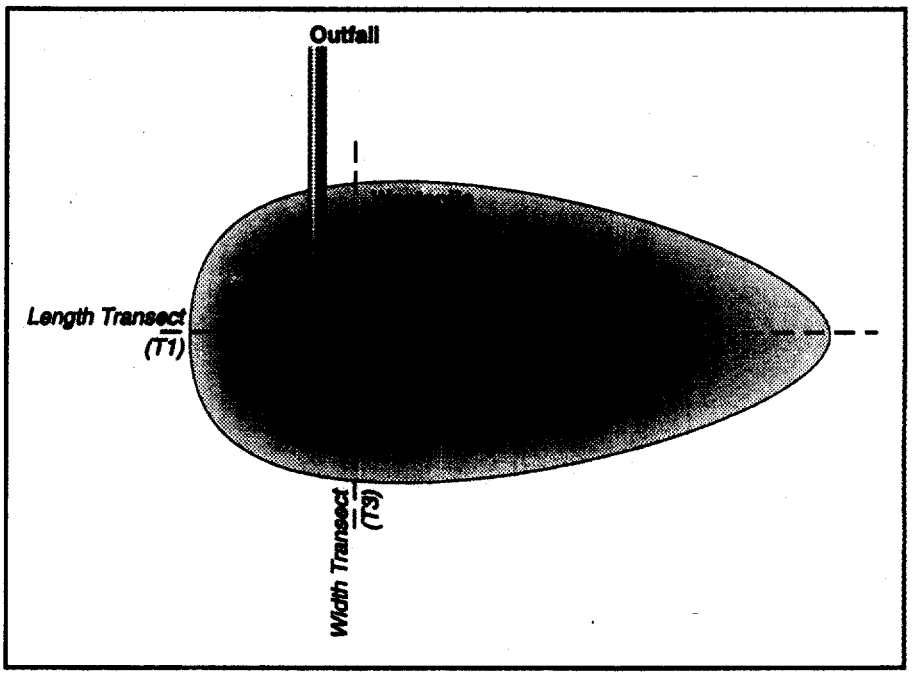

BILLING CODE 6560–50–C

b. Tier two survey. If a permittee has concluded from its seafloor monitoring survey of the last previous year of operation and discharge that its waste pile is greater than one half of an acre in size (21,780 sq. ft.) and less than three quarters of an acre in size (32,670 sq. ft.), then a permittee shall develop and implement a monitoring program to survey the area of its discharge waste pile during the current year of its facility's coverage under this Permit.

The tier two bottom survey shall be conducted along four transects. The principal transect shall be oriented along the maximum horizontal dimension of the waste pile (''the length''). The second transect (''the width'') shall be perpendicular to the principal transect, and shall cross it at the point where the waste pile is widest in that direction. The remaining two transects shall pass through the point where the first two transects intersect, and shall be at 45 degree angles to the first two transects. The survey shall record and report the measurements of the distances of each transect under which any continuous part of the waste pile occurs.

BILLING CODE 6560–50–p

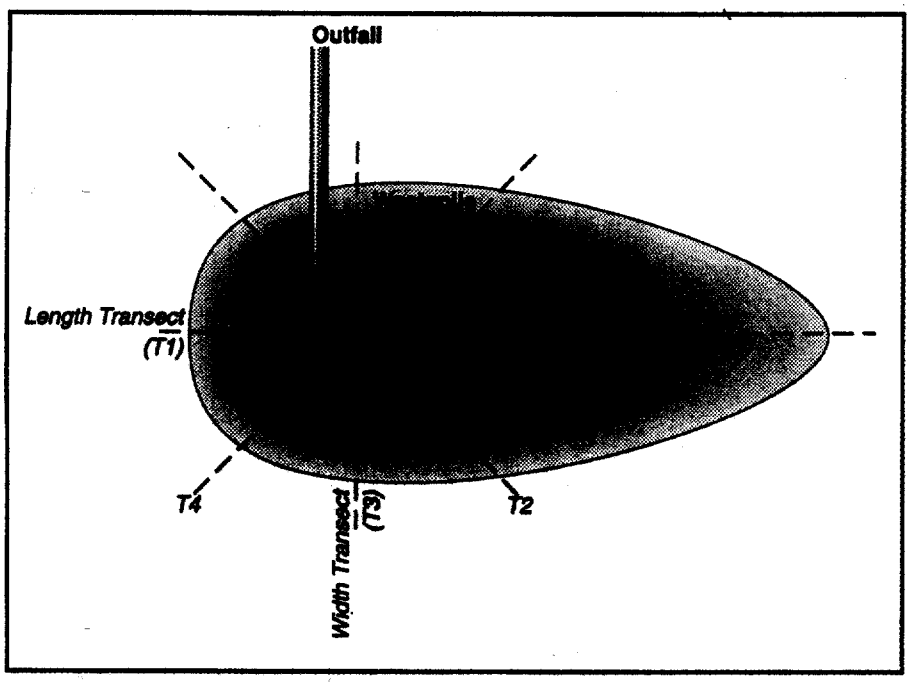

BILLING CODE 6560–50–C

C. Tier three survey. If a permittee has determined in its seafloor monitoring program of the last previous year of operation and discharge that its waste pile is equal to or greater than three quarters of an acre in size (32,670 sq. ft.), then a permittee shall develop and implement a monitoring program to survey the area of its discharge waste pile during the current year of its facility's coverage under this Permit.

The tier three bottom survey shall be conducted along four transects. The principal transect shall be oriented along the maximum horizontal dimension of the waste pile (''the length''). The second transect (''the width'') shall be perpendicular to the principal transect, and shall cross it at the point where the waste pile is widest in that direction. The remaining two transects shall pass through the point where the first two transects intersect, and shall be at 45 degree angles to the first two transects. The survey shall include measurements of the distances from the point where the transects intersect to the edge of the waste pile at each end of each transect. The survey shall also include measurements of the thickness of the waste pile at the point where the transects intersect, and at the eight points that are half way between the intersection point and the edge of the waste pile at each end of each transect.

BILLING CODE 6560–50–P

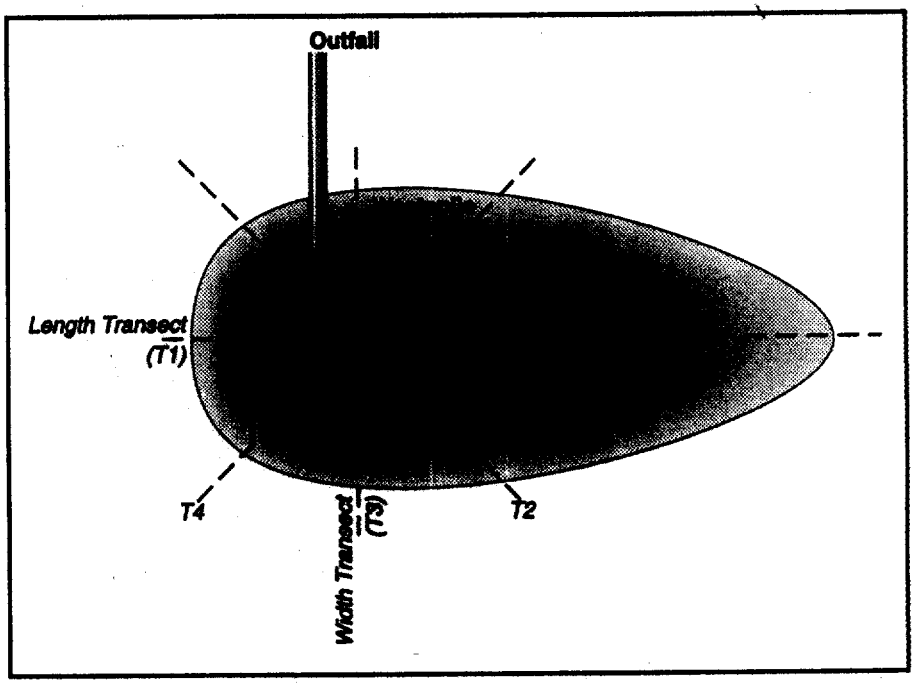

BILLING CODE 6560–50–C

6. Monitoring Report

A permittee shall submit a brief report of the seafloor monitoring survey which describes the methods and results of the survey. The description of the methods shall include at least the name, address and phone number of the surveyor, the date of the survey and the observational method and equipment used in the survey. The description of the results shall include at least the required dimensions and estimated area of the waste pile and a map of the configuration of the waste pile in relation to the discharge pipe and the bathymetry of the seafloor.

The area of the wastepile may be calculated by treating it as the sum of the areas of two parabolas which are joined at a common base (the ''width'') and which have heights that together equal the ''length'' of the waste pile. An approximation of the area of the waste pile is provided by the equation.

Area = (width*length) * (2/3)

A permittee shall submit a report of the monitoring program to EPA and ADEC on or before January 31st of the year following the survey. It is recommended that this report be submitted with the Annual Report.

7. Signatory Requirements

A permittee shall ensure that the monitoring report is signed by a principal officer or a duly appointed representative of the permittee.

Modification of Monitoring Program

The monitoring program may be modified if EPA and ADEC determine that it is appropriate. A modification may be requested by a permittee. The modified program may include changes in survey (1) stations, (2) times, (3) parameters or (4) methods.

Request for a Waiver

A permittee may request a waiver of the seafloor monitoring requirements. A request for a waiver must provide a detailed description of the circumstances supporting a waiver of monitoring and a demonstration that the discharge meets the Alaska water quality standard for settleable solid residues.

Requirement to Apply for an Individual Permit

EPA, in consultation with ADEC, may require a permittee to apply for an individual NPDES permit if the seafloor monitoring program indicates a probable violation of the Alaska water quality standards for settleable residues in marine waters.

D. Sea Surface and Shoreline Monitoring Requirements

1. Applicability

During the term of this Permit all permittees classified as shore-based or nearshore seafood processors and discharging within one (1) nautical mile of shore at MLLW shall conduct a sea surface and shoreline monitoring program.

2. Purpose

A permittee shall conduct a sea surface and shoreline monitoring program to determine compliance with the Alaska water quality standards for floating residues in marine waters. Alaska Administrative Code Part 18 § 70.020 states that

''(floating solids, debris, foam and scum) shall not * * * cause a film, sheen, or discoloration on the surface of the water * * * or cause a sludge, solid, or emulsion to be deposited * * * upon adjoining shorelines.''

3. Objectives

The sea surface and shoreline monitoring program will provide periodic assessments as defined in the above categories of operation during periods of operation and discharge. The monitoring of the sea surface shall record the incidence of occurrence and estimate the areal extent of contiguous films, sheens, or mats of foam within a three hundred (300) foot radius of the end of the outfall(s) and, in the case of shore-based facilities, within a one hundred foot distance of the seaward physical boundary of the facility (e.g., docks and piers). The monitoring of the shoreline shall record the total number of days for which observations were made and the incidence of occurrence and estimated areal extent of deposits of

seafood waste sludge, solids, or emulsions upon the adjacent shorelines.

a. Monitoring shall provide an accurate identification of the occurrence of these pollutants on the surface of the water or upon the shoreline.

b. Monitoring shall estimate the area(s) of occurrence of these pollutants with a precision of ±25%.

4. Schedule

A permittee shall conduct a sea surface and shoreline monitoring program during each year of coverage under the permit.

5. Monitoring Report

A permittee shall submit a brief report of the monitoring survey which describes the methods and results of the survey. The description of the methods shall include at least the name, address and phone number of the surveyor(s), the observational method and equipment used in the survey, and the point(s) of observation. The report of positive observations shall include the date and time of observation, an estimate of the area of scum, sheen, film or foam on the sea surface, and/or the area of sludge, solids, emulsion or scum deposited on the shoreline.

A permittee shall submit the report to EPA and ADEC on or before January 31st of the year following the survey. It is recommended that this report be submitted with the annual report of production and effluent monitoring.

6. Signatory Requirements

A permittee shall ensure that the monitoring report is signed by a principal officer or a duly appointed representative of the permittee.

7. Modification of Monitoring Program

The monitoring program may be modified if EPA and ADEC determine that it is appropriate. A modification may be requested by a permittee. The modified program may include changes in survey (1) stations, (2) times or (3) parameters.

8. Request for a Waiver

A permittee may request a waiver of the sea surface and shoreline monitoring requirements. A request for a waiver must provide a detailed description of the circumstances supporting a waiver of monitoring and a demonstration that the discharge meets the Alaska water quality standard for residues. Individual monitoring days may be waived due to conditions (e.g., weather or sea state) which make this monitoring hazardous to human health and safety.

9. Requirement to Apply for an Individual Permit

EPA, in consultation with ADEC, may require a permittee to apply for an individual NPDES permit if the sea surface and shoreline monitoring program indicates a probable violation of the Alaska water quality standards for residues in marine waters.

VII. Recording and Reporting Requirements

A. Records Contents

All effluent monitoring records shall bear the hand-written signature of the person who prepared them. In addition, all records of monitoring information shall include:

1. the date, exact place, and time of sampling or measurements;
2. the names of the individual(s) who performed the sampling or measurements;
3. the date(s) analyses were performed;
4. the names of the individual(s) who performed the analyses;
5. the analytical techniques or methods used; and
6. the results of such analyses.

B. Retention of Records

A permittee shall retain records of all monitoring information, including but not limited to, all calibration and maintenance records, copies of all reports required by this Permit, a copy of the NPDES Permit, and records of all data used to complete the application for this Permit, for a period of at least five years from the date of the sample, measurement, report or application, or for the term of this Permit, whichever is longer. This period may be extended by request of the Director or ADEC at any time.

C. Twenty-four Hour Notice of Noncompliance Reporting

A permittee shall report the following occurrences of noncompliance by telephone (206–553–1846) within 24 hours from the time a permittee becomes aware of the circumstances:

a. any discharge(s) to the receiving waters not authorized for coverage under this Permit including, but not limited to, waters described in Part III above or listed in Appendix I below;

b. any noncompliance that may endanger health or the environment;

c. any unanticipated bypass that results in or contributes to an exceedance of any effluent limitation in this Permit;

d. any upset that results in or contributes to an exceedance of any effluent limitation in this Permit; or

e. any violation of a maximum daily discharge limitation for any of the pollutants listed in this Permit.

2. A permittee shall also provide a written submission within five days of the time that a permittee becomes aware of any event required to be reported under subpart 1 above. The written submission shall contain:

a. a description of the noncompliance and its cause;

b. the period of noncompliance, including exact dates and times;

c. the estimated time noncompliance is expected to continue if it has not been corrected; and

d. steps taken or planned to reduce, eliminate, and prevent reoccurrence of the noncompliance.

3. The Director may, at his sole discretion, waive the written report on a case-by-case basis if the oral report has been received within 24 hours by the NPDES Compliance in Seattle, Washington, by telephone, (206) 553–1846.

4. Reports shall be submitted to the addresses in Part VI.B. of this Permit.

D. Other Noncompliance Reporting

A permittee shall report all instances of noncompliance, not required to be reported within 24 hours, with the annual report.

VIII. Compliance Responsibilities

A. Duty to Comply

A permittee shall comply with all conditions of this Permit. Any permit noncompliance constitutes a violation of the Act and is grounds for enforcement action, for permit termination, revocation and reissuance, or modification, or for denial of a permit renewal application. A permittee shall give reasonable advance notice to the Director and ADEC of any planned changes in the permitted facility or activity that may result in noncompliance with permit requirements.

B. Penalties for Violations of Permit Conditions

1. Civil and Administrative Penalties

Sections 309(d) and 309(g) of the Act provide that any person who violates a permit condition implementing CWA § 301, 302, 306, 307, 308, 318, or 405 shall be subject to a civil or administrative penalty, not to exceed $25,000 per day for each violation.

2. Criminal Penalties

a. Negligent violations. Section 309(c)(1) of the Act provides that any person who negligently violates a permit condition implementing CWA

§ 301, 302, 306, 307, 308, 318, or 405 shall be punished by a fine of not less than $2,500 nor more than $25,000 per day of violation, or by imprisonment for not more than 1 year, or by both.

b. Knowing violations. Section 309(c)(2) of the Act provides that any person who knowingly violates a permit condition implementing CWA § 301, 302, 306, 307, 308, 318, or 405 shall be punished by a fine of not less than $5,000 nor more than $50,000 per day of violation, or by imprisonment for not more than 3 years, or by both.

c. Knowing endangerment. Section 309(c)(3) of the Act provides that any person who knowingly violates a permit condition implementing CWA § 301, 302, 303, 306, 307, 308, 318, or 405, and who knows at that time that he thereby places another person in imminent danger of death or serious bodily injury, shall, upon conviction, be subject to a fine of not more than $250,000 or imprisonment of not more than 15 years, or both. A person that is an organization shall be subject to a fine of not more than $1,000,000.

d. False statements. Section 309(c)(4) of the Act provides that any person who knowingly makes any false material statement, representation, or certification in any application, record, report, plan, or other document filed or required to be maintained under this Act or who knowingly falsifies, tampers with, or renders inaccurate any monitoring device or method required to be maintained under this Act, shall be punished by a fine of not more than $10,000, or by imprisonment for not more than 2 years, or by both.

Except as provided in Permit conditions in Part VIII.F. (''Bypass of Treatment Facilities'') and Part VIII.G., (''Upset Conditions''), nothing in this Permit shall be construed to relieve a permittee of the civil or criminal penalties for noncompliance.

C. Need to Halt or Reduce Activity Not a Defense

It shall not be a defense for a permittee in an enforcement action that it would have been necessary to halt or reduce the permitted activity in order to maintain compliance with the conditions of this Permit.

D. Duty to Mitigate

A permittee shall take all reasonable steps to minimize or prevent any discharge in violation of this Permit that has a reasonable likelihood of adversely affecting human health or the environment.

E. Proper Operation and Maintenance

A permittee shall at all times properly operate and maintain all facilities and systems of treatment and control (and related appurtenances) that are installed or used by a permittee to achieve compliance with the conditions of this Permit. Proper operation and maintenance also includes adequate laboratory controls and appropriate quality assurance procedures. This provision requires the operation of back-up or auxiliary facilities or similar systems only when the operation is necessary to achieve compliance with the conditions of this Permit.

F. Bypass of Treatment Facilities

1. Bypass not Exceeding Limitations

A permittee may allow any bypass to occur that does not cause effluent limitations to be exceeded, but only if it also is for essential maintenance to assure efficient operation. These bypasses are not subject to the provisions of paragraphs 2 and 3 of this Part.

2. Notice

a. Anticipated bypass. If a permittee knows in advance of the need for a bypass, it shall submit prior notice, if possible at least 10 days before the date of the bypass.

b. Unanticipated bypass. A permittee shall submit notice of an unanticipated bypass as required under Part VII.F. (''Twenty-four hour notice of noncompliance reporting'').

3. Prohibition of Bypass

a. Bypass is prohibited, and the Director or ADEC may take enforcement action against a permittee for a bypass, unless:

(1) The bypass was unavoidable to prevent loss of life, personal injury, or severe property damage;

(2) There were no feasible alternatives to the bypass, such as the use of auxiliary treatment facilities, retention of untreated wastes, or maintenance during normal periods of equipment downtime. This condition is not satisfied if adequate back-up equipment shall have been installed in the exercise of reasonable engineering judgment to prevent a bypass that occurred during normal periods of equipment downtime or preventive maintenance; and

(3) A permittee submitted notices as required under paragraph 2 of this Part.

b. The Director and ADEC may approve an anticipated bypass, after considering its adverse effects, if the Director and ADEC determine that it will meet the three conditions listed above in paragraph 3.a. of this Part.

G. Upset Conditions

1. Effect of an Upset

An upset constitutes an affirmative defense to an action brought for noncompliance with such technology-based permit effluent limitations if a permittee meets the requirements of paragraph 2 of this Part. No determination made during administrative review of claims that noncompliance was caused by upset, and before an action for noncompliance, is final administrative action subject to judicial review.

2. Conditions Necessary for a Demonstration of Upset

To establish the affirmative defense of upset, a permittee shall demonstrate, through properly signed, contemporaneous operating logs, or other relevant evidence that:

a. An upset occurred and that a permittee can identify the cause(s) of the upset;

b. The permitted facility was at the time being properly operated;

c. A permittee submitted notice of the upset as required under Part VII.F. (''Twenty-four hour notice of noncompliance reporting) and

d. A permittee complied with any remedial measures required under Part VIII.D. (''Duty to Mitigate'').

3. Burden of Proof

In any enforcement proceeding, a permittee seeking to establish the occurrence of an upset has the burden of proof.

H. Planned Changes

A permittee shall give notice to the Director and ADEC as soon as possible of any planned physical alterations or additions to the permitted facility whenever:

1. The alteration or addition to a permitted facility may meet one of the criteria for determining whether a facility is a new source as determined in 40 CFR § 122.29(b); or

2. The alteration or addition could significantly change the nature or increase the quantity of pollutants discharged. This notification applies to pollutants that are not subject to effluent limitations in this Permit.

A permittee shall give notice to the Director and ADEC as soon as possible of any planned changes in process or chemical use whenever such change could significantly change the nature or increase the quantity of pollutants discharged.

I. Anticipated Noncompliance

A permittee shall also give advance notice to the Director and ADEC of any

planned changes in the permitted facility or activity that may result in noncompliance with this Permit.

IX. General Provisions

A. Permit Actions

This Permit may be modified, revoked and reissued, or terminated for cause. The filing of a request by a permittee for a permit modification, revocation and reissuance, or termination, or a notification of planned changes or anticipated noncompliance, does not stay any permit condition.

B. Duty to Reapply

If a permittee intends to continue an activity regulated by this Permit after the expiration date of this Permit, a permittee must apply for and obtain a new permit. The application shall be submitted at least 60 days before the expiration date of this Permit.

C. Duty to Provide Information

A permittee shall furnish to the Director and ADEC, within the time specified in the request, any information that the Director or ADEC may request to determine whether cause exists for modifying, revoking and reissuing, or terminating this Permit, or to determine compliance with this Permit. A permittee shall also furnish to the Director or ADEC, upon request, copies of records required to be kept by this Permit.

D. Incorrect Information and Omissions

When a permittee becomes aware that it failed to submit any relevant facts in a permit application, or that it submitted incorrect information in a permit application or any report to the Director or ADEC, it shall promptly submit the omitted facts or corrected information.

E. Signatory Requirements

All applications, reports or information submitted to the Director and ADEC shall be signed and certified.

1. All permit applications shall be signed as follows:

a. For a corporation: by a principal corporate officer.

b. For a partnership or sole proprietorship: by a general partner or the proprietor, respectively.

c. For a municipality, state, federal, or other public agency: by either a principal executive officer or ranking elected official.

2. All reports required by this Permit and other information requested by the Director or ADEC shall be signed by a person described above or by a duly authorized representative of that person. A person is a duly authorized representative only if:

a. The authorization is made in writing by a person described above and submitted to the Director and ADEC, and

b. The authorization specifies either an individual or a position having responsibility for the overall operation of the regulated facility or activity, such as the position of plant manager, superintendent, position of equivalent responsibility, or an individual or position having overall responsibility for environmental matters for the company. (A duly authorized representative may thus be either a named individual or any individual occupying a named position.)

3. Changes to authorization. If an authorization under subpart 2 above is no longer accurate because a different individual or position has responsibility for the overall operation of the facility, a new authorization satisfying the requirements of subpart 2 must be submitted to EPA and ADEC prior to or together with any reports, information, or applications to be signed by an authorized representative.

4. Certification. Any person signing a document under this Part shall make the following certification:

> I certify under penalty of law that this document and all attachments were prepared under my direction or supervision in accordance with a system designed to assure that qualified personnel properly gather and evaluate the information submitted. Based on my inquiry of the person or persons who manage the system, or those persons directly responsible for gathering the information, the information submitted is, to the best of my knowledge and belief, true, accurate, and complete. I am aware that there are significant penalties for submitting false information, including the possibility of fine and imprisonment for knowing violations.

F. Availability of Reports

Except for data determined to be confidential under 40 CFR § 2, all reports prepared in accordance with this Permit shall be available for public inspection at the offices of the state water pollution control agency and the Director and ADEC. As required by the Act, permit applications, permits and effluent data shall not be considered confidential.

G. Inspection and Entry

A permittee shall allow the Director, ADEC, or an authorized representative (including an authorized contractor acting as a representative of the Administrator), upon the presentation of credentials and other documents as may be required by law, to:

1. Enter upon a permittee's premises where a regulated facility or activity is located or conducted, or where records must be kept under the conditions of this Permit;

2. Have access to and copy, at reasonable times, any records that must be kept under the conditions of this Permit;

3. Inspect at reasonable times any facilities, equipment (including monitoring and control equipment), practices, or operations regulated or required under this Permit; and

4. Sample or monitor at reasonable times, for the purpose of assuring permit compliance or as otherwise authorized by the Act, any substances or parameters at any location.

H. Oil and Hazardous Substance Liability

Nothing in this Permit shall be construed to preclude the institution of any legal action or relieve a permittee from any responsibilities, liabilities, or penalties to which a permittee is or may be subject under Section 311 of the Act.

I. Property Rights

The issuance of this Permit does not convey any property rights of any sort, or any exclusive privileges, nor does it authorize any injury to private property or any invasion of personal rights, nor any infringement of federal, state or local laws or regulations.

J. Severability

The provisions of this Permit are severable. If any provision of this Permit, or the application of any provision of this Permit to any circumstance, is held invalid, the application of such provision to other circumstances, and the remainder of this Permit, shall not be affected thereby.

K. Transfers

This Permit may be automatically transferred to a new permittee if:

1. The current permittee notifies the Director at least 60 days in advance of the proposed transfer date;

2. The notice includes a written agreement between the existing and new permittees containing a specific date for transfer of permit responsibility, coverage, and liability between them; and

3. The Director does not notify the existing permittee and the proposed new permittee of his or her intent to modify, or revoke and reissue the permit.

If the notice described in subpart 3 above is not received, the transfer is effective on the date specified in the

agreement mentioned in subpart 2 above.

State Laws

Nothing in this Permit shall be construed to preclude the institution of any legal action or relieve a permittee from any responsibilities, liabilities, or penalties established pursuant to any applicable state law or regulation under authority preserved by Section 510 of the Act.

M. Reopener Clause

1. This Permit shall be modified, or alternatively, revoked and reissued, to comply with any applicable effluent standard or limitation issued or approved under Sections 301(b)(2)(C) and (D), 304(b)(2), and 307(a)(2) of the Act, as amended, if the effluent standard, limitation, or requirement so issued or approved:

a. Contains different conditions or is otherwise more stringent than any condition in this Permit; or

b. Controls any pollutant or disposal method not addressed in this Permit.

This Permit as modified or reissued under this paragraph shall also contain any other requirements of the Act then applicable.

2. This Permit may be reopened to adjust any effluent limitations if future water quality studies, waste load allocation determinations, or changes in water quality standards show the need for different requirements.

X. Definitions and Acronyms

AAC means Alaska Administrative Code.

ADEC means Alaska Department of Environmental Conservation.

ADFG means Alaska Department of Fish and Game.

BMP means best management practices.

Bypass means the intentional diversion of waste streams from any portion of a treatment facility (see Part IV.G.).

CFR means the Code of Federal Regulations.

Cooling water means once-through non-contact cooling water.

CWA means the Clean Water Act.

Daily discharge means the discharge of a pollutant measured during a calendar day or any 24-hour period that reasonably represents the calendar day for purposes of sampling. For pollutants with limitations expressed in units of mass, the *daily discharge* is calculated as the total mass of the pollutant discharged over the day. For pollutants with limitations expressed in other units of measurement, the *daily discharge* is calculated as the average measurement of the pollutant over the day.

Discharge of a pollutant means any addition of any *pollutant* or combination of pollutants to *waters of the United States* from any *point source*.

Domestic wastes means materials discharged from showers, sinks, safety showers, eye-wash stations, hand-wash stations, fish-cleaning stations, galleys, and laundries.

EPA means the United States Environmental Protection Agency.

Excluded area means an area not authorized as a receiving water covered under this general NPDES permit, as described in Part III.A–D. above and Appendix I below.

Fixed position means to a circular anchorage area of radius equal to one quarter (0.25) nautical mile.

Garbage means all kinds of victual, domestic, and operational waste, excluding fresh fish and part thereof, generated during the normal operation and liable to be disposed of continuously or periodically except dishwater, graywater, and those substances that are defined or listed in other Annexes to MARPOL 73/78.

Graywater means galley, bath and shower wastewater.

Marine sanitation device includes any equipment for installation on board a vessel which is designed to receive, retain, treat, or discharge sewage, or any process to treat such sewage.

Maximum means the highest measured discharge or pollutant in a wastestream during the time period of interest.

MLLW means mean lower low water.

mg/l means milligrams per liter.

Mixing zone means the area adjacent to a discharge or activity in the water where a receiving water may not meet all the water quality standards; wastes and water are given an area to mix so that the water quality standards are met at the mixing zone boundaries.

Monthly average means the average of *daily discharges* over a monitoring month, calculated as the sum of all *daily discharges* measured during a monitoring month divided by the number of *daily discharges* measured during that month.

MSD means marine sanitation device.

NMFS means United States National Marine Fisheries Service.

NOI means a ''Notice of Intent,'' that is, an application, to be authorized to discharge under a general NPDES permit.

Pollutant means dredged spoil, solid waste, incinerator residue, filter backwash, sewage, garbage, sewage sludge, munitions, chemical wastes, biological materials, radioactive materials, heat, wrecked or discarded equipment, rock, sand, cellar dirt and industrial, municipal, and agricultural waste discharged into water.

Sanitary wastes means human body waste discharged from toilets and urinals.

Seafood means the raw material, including freshwater and saltwater fish and shellfish, to be processed, in the form in which it is received at the processing plant.

Seafood process waste means the waste fluids, organs, flesh, bones, woody fiber and chitinous shells produced in the conversion of aquatic animals and plants from a raw form to a marketable form.

Severe property damage means substantial physical damage to property, damage to the treatment facilities which causes them to become inoperable, or substantial and permanent loss of natural resources which can reasonably be expected to occur in the absence of a bypass. Severe property damage does not mean economic loss caused by delays in production.

Sewage means human body wastes and the wastes from toilets and other receptacles intended to receive or retain body wastes.

Upset means an exceptional incident in which there is unintentional and temporary noncompliance with technology-based permit effluent limitations because of factors beyond the reasonable control of the permittee. An upset does not include noncompliance to the extent caused by operational error, improperly designed treatment facilities, inadequate treatment facilities, lack of preventive maintenance, or careless or improper operation (see Part IV.H.).

U.S.C. means United States Code.

USFWS means United States Fish and Wildlife Service.

Water depth means the depth of the water between the surface and the seafloor as measured at mean lower low water (0.0).

Zone of deposit (ZOD) means an area of the bottom in marine or estuarine waters in which the Alaska Department of Environmental Conservation has authorized the deposit of substances in exceedence of the water quality criteria of 18 AAC 70.020(b) and the antidegradation requirement of 18 AAC 70.0101(c).

APPENDIX—CATEGORICAL LISTING OF AREAS EXCLUDED FROM COVERAGE UNDER GENERAL PERMIT

Excluded area	Receiving waters	Location
STATE GAME REFUGES: (SGR; see Figure 1)		
Anchorage Coastal SGR	.....	Knik Arm, Turnagain Arm.
	City of Anchorage	
	N Cook Inlet	
Cape Newenham SGR	Chagvan Bay; S Kuskokwin Bay	South of the City of Good News.
Creamer's Field SGR	Isabella River wetlands	City of Fairbanks.
Goose Bay SGR	Goose Bay, Knik Arm; N Cook Inlet	North of the City of Anchorage.
Izembek SGR	Isembek Lagoon; SE Bristol Bay	NW terminus of the Alaska Peninsula.
McNeil River SGR	Paint River and Kamishak Bay	SE base of the Alaska Peninsula
Mendenhall Wetlands SGR . City of Juneau	..... .	NW Gastineau Channel.
Minto Flats SGR	Tanana River wetlands	West of the City of Fairbanks.
Palmer Hay Flats SGR	Knik Arm; N Cook Inlet	NE of the City of Anchorage.
Susitna Flats SGR	N Cook Inlet	West of the City of Anchorage.
Trading Bay SGR	Gompertz Channel, Trading Bay	SW of the City of Anchorage.
Yakataga SGR	Tsiu River delta; N Gulf of Alaska	West of Cape Yakataga.
STATE CRITICAL HABITAT AREAS (SCHA; see Figure 1)		
Anchor River-Fritz Creek SCHA.	East of the City of Anchor Point	Anchor River and Fritz Creek.
Chilkat River SCHA	Chilkat River	North of the City of Haines.
Cinder River SCHA	Cinder River Delta, E Bristol Bay	SW of the City of Pilot Point.
Clam Gulch SCHA	Cook Inlet	South of the City of Kasilof.
Copper River Delta SCHA ..	.....	Copper River delta; N Gulf of Alaska.
	SE of the City of Cordova.	
Dude Creek SCHA	Dude Creek, Icy Passage	West of the City of Gustavus.
Egegik SCHA	Egegik Bay and E Bristol Bay	West of the City of Egegik.
Fox River Flats SCHA	Fox River Delta, Kachemak Bay	NE of the City of Homer.
Kachemak Bay SCHA	Kachemak Bay	Adjacent to the City of Homer.
Kalgin Island SCHA	Swamp Creek wetlands; Cook Inlet	SW Kalgin Is.
Pilot Point SCHA	Ugashik Bay and E Bristol Bay	West of the City of Pilot Point.
Port Heiden SCHA	Port Heiden and E Bristol Bay	North-central Alaska Peninsula.
Port Moller SCHA	Port Moller and Nelson Lagoon	City of Port Moller.
Redoubt Bay SCHA	Big River wetlands, Redoubt Bay; Cook Inlet	West of the City of Nikiski.
Tugidak Island SCHA	NW Gulf of Alaska	Trinity Islands, SW of Kodiak Is.
Willow Mountain SCHA	Willow Creek tributaries	NW of the City of Palmer.
STATE GAME SANCTUARIES: (SGA; see Figure 1)		
McNeil River SGS	Kamishak Bay; NW Cook Inlet	SE base of the Alaska Peninsula.
Stan Price SGS	Windfall Harbor; Seymour Canal	E Admiralty Is., SE Alaska.
Walrus Islands SGS	Togiak Bay; N Bristol Bay	Walrus Is. (a.k.a. Round Is.), Crooked Is., High Is., Summit Is., Black Rock the Twins.
NATIONAL PARKS, PRESERVES AND MONUMENTS: Admiralty Island Nat'l Island, SE Alaska Monument	National monument	Rivers and coastal waters of Admiralty.
Aniakchak Nat'l Monument, Alaska Peninsula and Preserve.	.....	Aniakchak Bay, Amber Bay, South central.
Glacier Bay Nat'l Park Archipelago, and Preserve.	Dixon Harbor, Palma Bay, Lituya Bay; N Gulf of Alaska	Glacier Bay, Cross Sound, North Alexander, SE Alaska.
Katmai Nat'l Park and Preserve.	Katmai Bay, Kinak Bay, Kukak Bay, Hallow Bay, Kamishak Bay.	S base of Alaska Peninsula.
Kenai Fjords Nat'l Preserve	Nuka Bay, Two Arm Bay	S Kenai Peninsula.
Lake Clark Nat'l Park and Preserve.	N coast of Cook Inlet	Chiratna Bay, Tuxedni Bay.
Misty Fiords Nat'l Monument.	.....	Tongass Nat'l Forest, SE Alaska.
Wrangell-St. Elias Nat'l Park and Preserve.	NW of the City of Yakutat, N Gulf of Alaska	N Icy Bay, W Yakutat Bay.
NATIONAL WILDLIFE REFUGES: (NWR)		
Alaska Maritime NWR	Bering Sea, N Gulf of Alaska	Aleutian Islands and Pribilof Islands.
Alaska Peninsula NWR	S Port Moller and S Herendeen Bay and the coastal waters from NE Cold Bay to Alinchak Bay.	Alaska Peninsula.

APPENDIX—CATEGORICAL LISTING OF AREAS EXCLUDED FROM COVERAGE UNDER GENERAL PERMIT—Continued

Excluded area	Receiving waters	Location
Izembek NWR	Cold Bay, Izembek Lagoon	SW terminus of Alaska Peninsula.
Kenai NWR	S Turnagain Arm; N Cook Inlet	Kenai Peninsula.
Kodiak NWR	Kiliuda Bay, Sitkalidak Strait, Alitak Bay, Sitkinak Strait, Olga Bay, Uyak Bay, Uganik Bay; Ban Bay; W Gulf of Alaska.	Kodiak Is., Afognak Is. and Trinity Islands.
Togiak NWR	Jacksmith Bay, Goodnews Bay, Chagvan Bay, Hagemeister Strait, Togiak Bay, Kulukak Bay, Nushagak Bay; N Bristol Bay.	Surrounding the City of Togiak
Yukon Delta NWR	Scammon Bay, Kokechik Bay, Hooper Bay, Hazen Bay, Baird Inlet; E Bering Sea.	Yukon River delta, Kuskokwin River delta, Nunivak Is.
NATIONAL WILDERNESS AREAS: (NWA; see Figure 2)		
Chuck River NWA	Rivers and coastal waters of NWA	Tongass Nat'l Forest, SE Alaska.
Coronation Island NWA	Rivers and coastal waters of NWA	Tongass Nat'l Forest, SE Alaska.
Endicott River NWA	Rivers and coastal waters of NWA	Tongass Nat'l Forest, SE Alaska.
Karta NWA	Rivers and coastal waters of NWA	Tongass Nat'l Forest, SE Alaska.
Kootznoowoo NWA	Rivers and coastal waters of NWA	Tongass Nat'l Forest, SE Alaska.
Kuiu NWA	Rivers and coastal waters of NWA	Tongass Nat'l Forest, SE Alaska.
Maurelle Islands NWA	Rivers and coastal waters of NWA	Tongass Nat'l Forest, SE Alaska.
Misty Fiords NWA	Rivers and coastal waters of NWA	Tongass Nat'l Forest, SE Alaska.
Petersburg Creek NWA	Rivers and coastal waters of NWA	Tongass Nat'l Forest, SE Alaska.
Pleasant Islands NWA	Rivers and coastal waters of NWA	Tongass Nat'l Forest, SE Alaska.
Russell Fiord NWA	Rivers and coastal waters of NWA	Tongass Nat'l Forest, SE Alaska.
South Baranof NWA	Rivers and coastal waters of NWA	Tongass Nat'l Forest, SE Alaska.
South Etolin NWA	Rivers and coastal waters of NWA	Tongass Nat'l Forest, SE Alaska.
South Prince of Wales NWA		Rivers and coastal waters of NWA Tongass.
Stikine-LeConte NWA	Rivers and coastal waters of NWA	Tongass Nat'l Forest, SE Alaska.
Tebenkof Bay NWA	Rivers and coastal waters of NWA	Tongass Nat'l Forest, SE Alaska.
Tracy Arm-Fords Terror NWA.	Rivers and coastal waters of NWA	Tongass Nat'l Forest, SE Alaska.
Warren Island NWA	Rivers and coastal waters of NWA	Tongass Nat'l Forest, SE Alaska.
West Chichagof-Yakobi NWA.	Rivers and coastal waters of NWA Tongass.	Nat'l Forest, SE Alaska.
STELLER SEA LION ROOKERIES AND HAUL-OUT AREAS: (*see* Figures 3 and 4)		
58 **Federal Register** 45278		
NORTHERN FUR SEAL ROOKERIES: (*see* Figures 5 and 6)		
St. Paul Island	Coastal waters	Bering Sea.
Otter Island	Coastal waters	Bering Sea.
St. George Island	Coastal waters	Bering Sea.
SEA BIRD NESTING AREAS: (*see* Figure 7)		
ALASKA RIVER SEGMENTS DESIGNATED UNDER THE WILD AND SCENIC RIVERS ACT		
Alagnak River	Riverine waters	Nushagak-Bristol Bay lowland.
Alatna River	Riverine waters	Central Brooks Mountains Range.
Aniakchak River	Riverine waters	Aleutian Mountains Range.
Charley River	Riverine waters	Yukon-Tanana uplands.
Chilikadrotna River	Riverine waters	Central Brooks Mountains Range.
John River	Riverine waters	Central Brooks Mountains Range.
Kobuk River	Riverine waters	Central Brooks Mountains Range.
North Fork Koyukuk River	Riverine waters	Eastern Brooks Mountains Range.
Mulchatna River	Riverine waters	Alaska Mountains Range.
Noatak River	Riverine waters	Eastern Brooks Mountains Range.
Salmon River	Riverine waters	Baird Mountains
Tinayguk River	Riverine waters	Central-eastern Brooks Mountains Range.
Tlikakila River	Riverine waters	Southern Alaska Mountains Range
IMPAIRED OR WATER QUALITY LIMITED WATERS LISTED BY ADEC IN EITHER ITS CWA § 305(b) REPORT OR § 303(d) LIST		
Akutan Harbor, west	Waters of the bay west of 165°46'00''W	Akutan Is.

APPENDIX—CATEGORICAL LISTING OF AREAS EXCLUDED FROM COVERAGE UNDER GENERAL PERMIT—Continued

Excluded area	Receiving waters	Location
Unalaska Bay, south	Waters of Unalaska Bay from the southwest point of Amaknak Is. at Arch Rock west to the western point of Captains Bay at 53°52'45''N, 166°34'33'', west along shore to Devilfish Point, north to the southern tip of Hog Is., east to shore of Amaknak Is. at northern end of airstrip at 53°54'16''N, 166°33'09''W, south along the shore of Amaknak Is. to the point of origin.	Unalaska Is.
Captains Bay	All of the waters of the bay to the bridge separating Iliuliuk Harbor and a line at the mouth of the bay between Arch Rock point and the point of land at 53°52'45''N, 166°34'33''W.	Unalaska Is.
Udagak Bay	Waters of the bay from a line between 53°44'32''N, 166°19'14''W and 53°44'32''N, 166°19'14''W.	Unalaska Is.
Gibson Cove	Gibson Cove	City of Kodiak.
Herring Bay	Herring Bay	City of Sitka.
Jamestown Bay	Jamestown Bay	Near Cannon Is.
Rowan Bay	Rowan Bay	Kuru Is.
Silver Bay	Silver Bay	City of Sitka.
Thorn Bay	Thorn Bay	POW Is.
Ward Cove	Ward Cove	City of Ketchikan.

BILLING CODE 6560–50–P

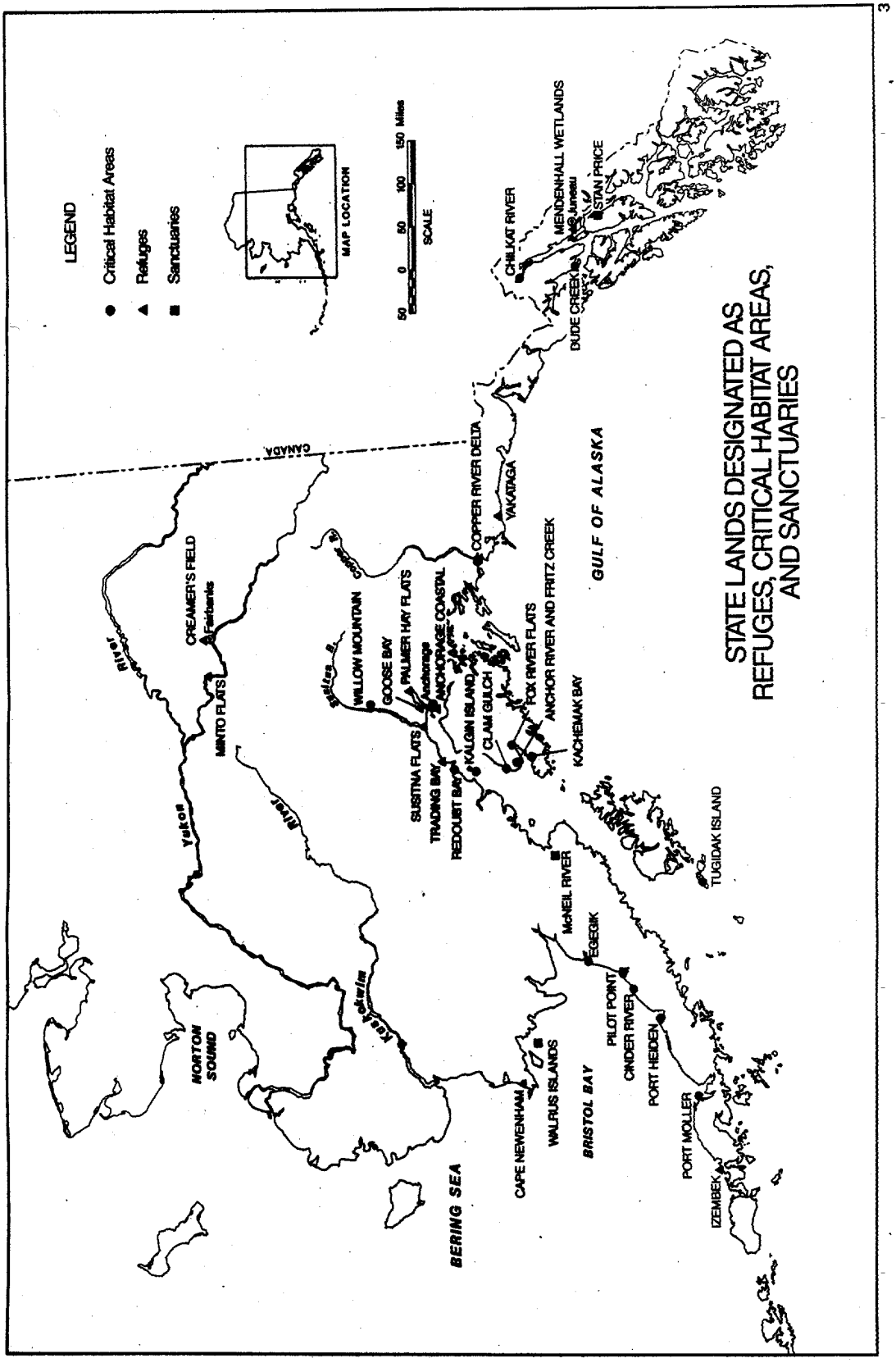

Figure 1. Locations of Alaska State Game Refuges, Critical Habitat Areas, and Sanctuaries.

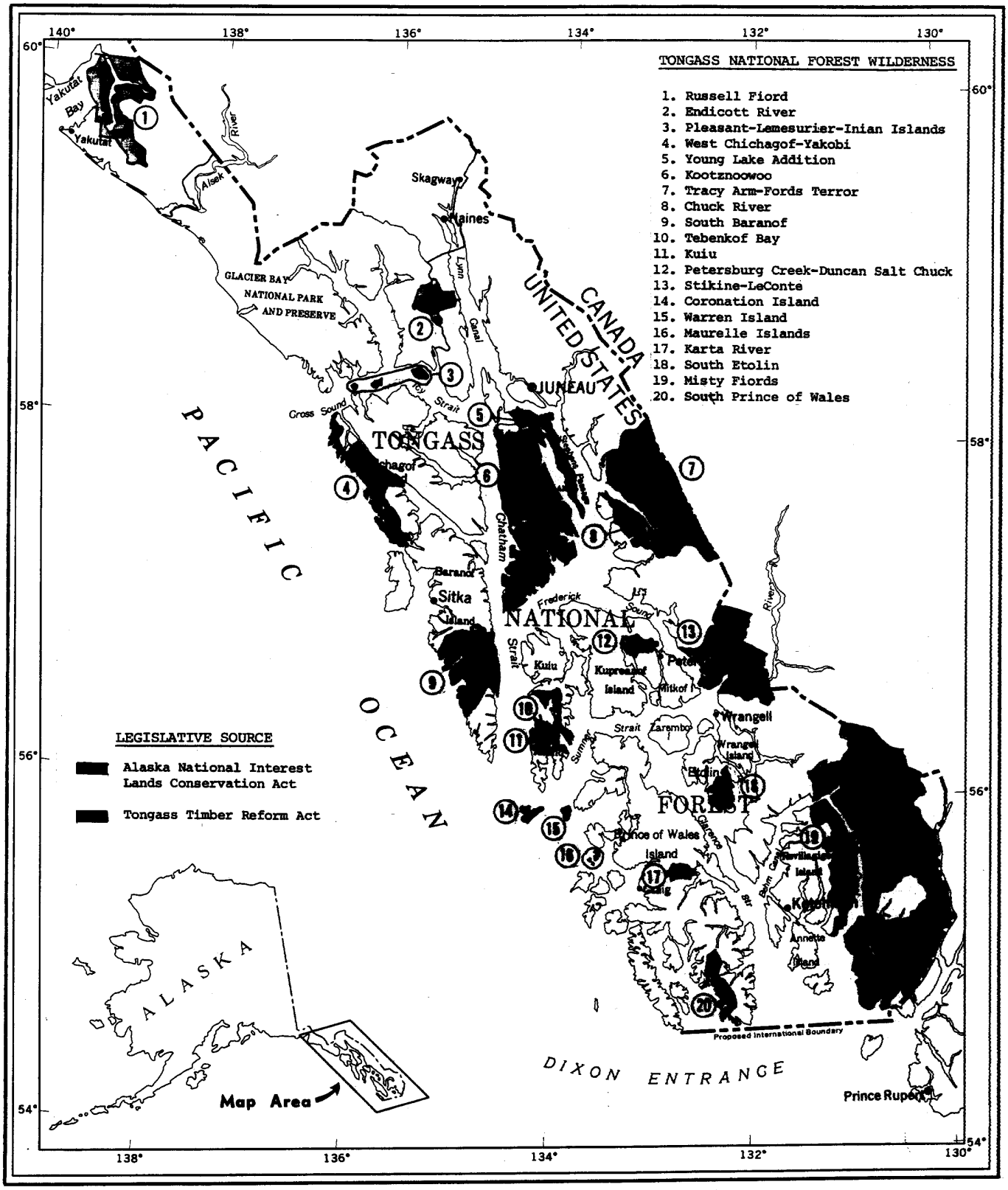

Figure 2. Locations of National Wilderness Areas.

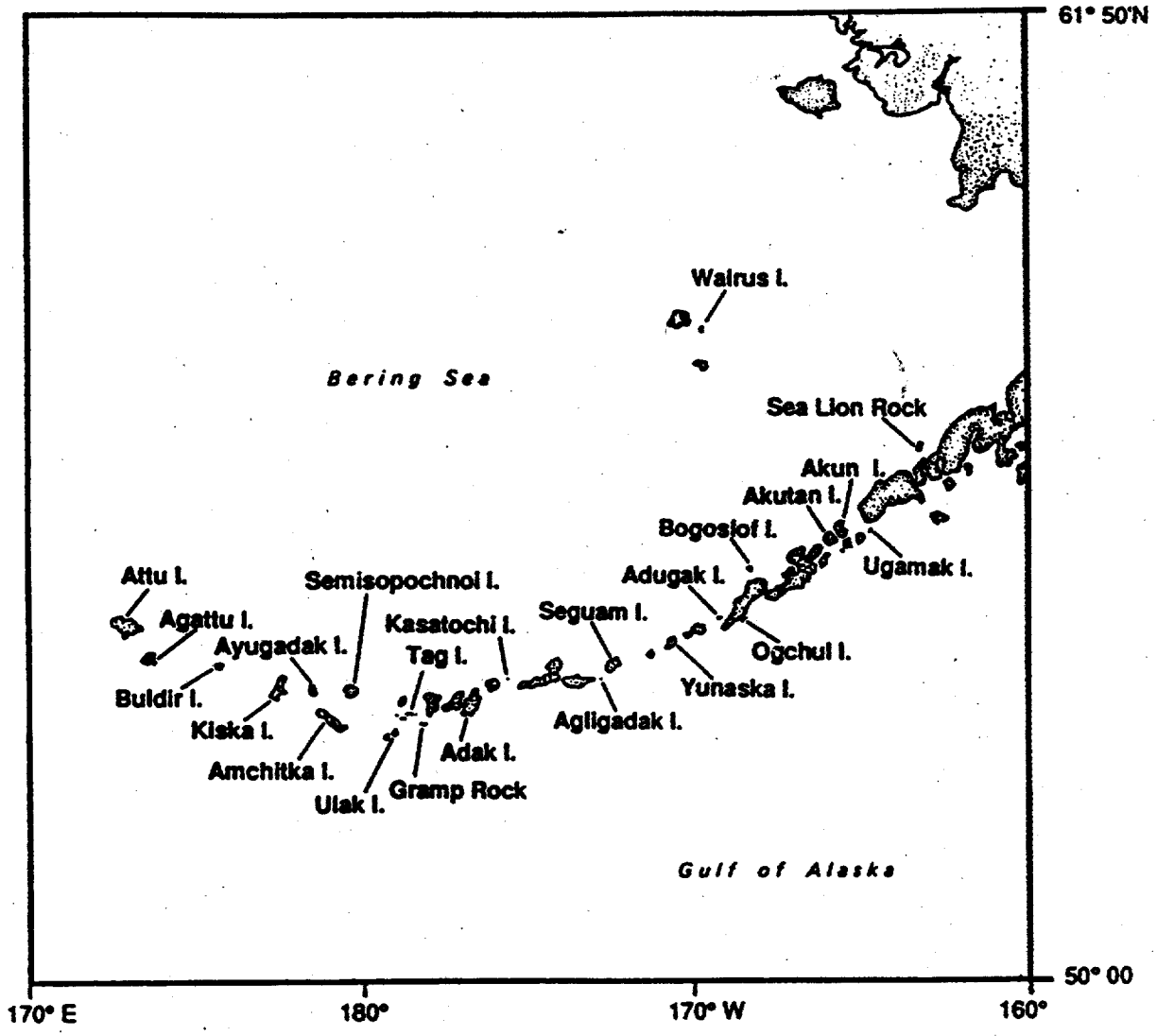

Figure 3. Locations of Steller sea lion rookeries in the Aleutian Islands and Bering Sea.

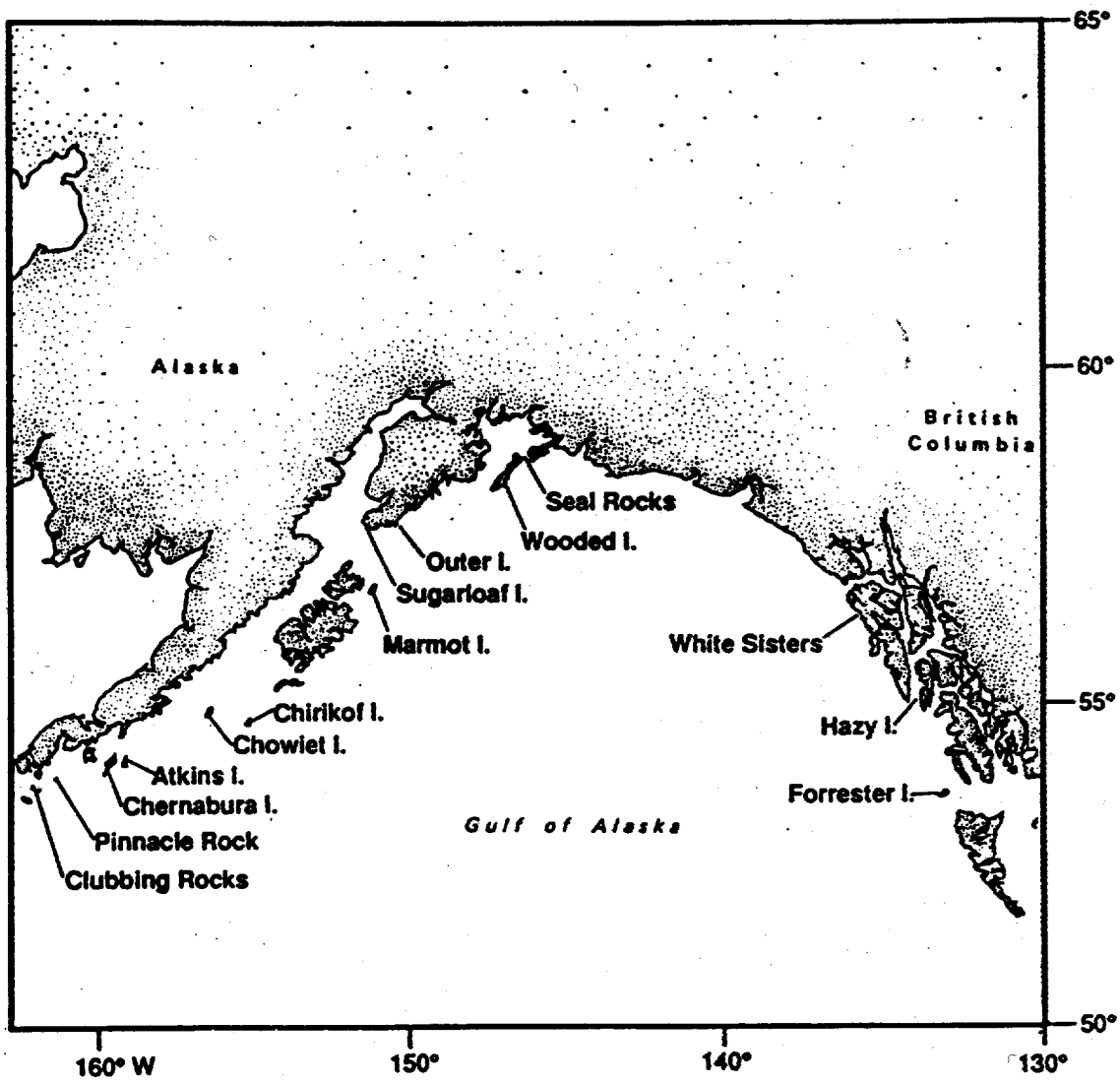

Figure 4. Locations of Steller sea lion rookeries in the Gulf of Alaska and southeast Alaska.

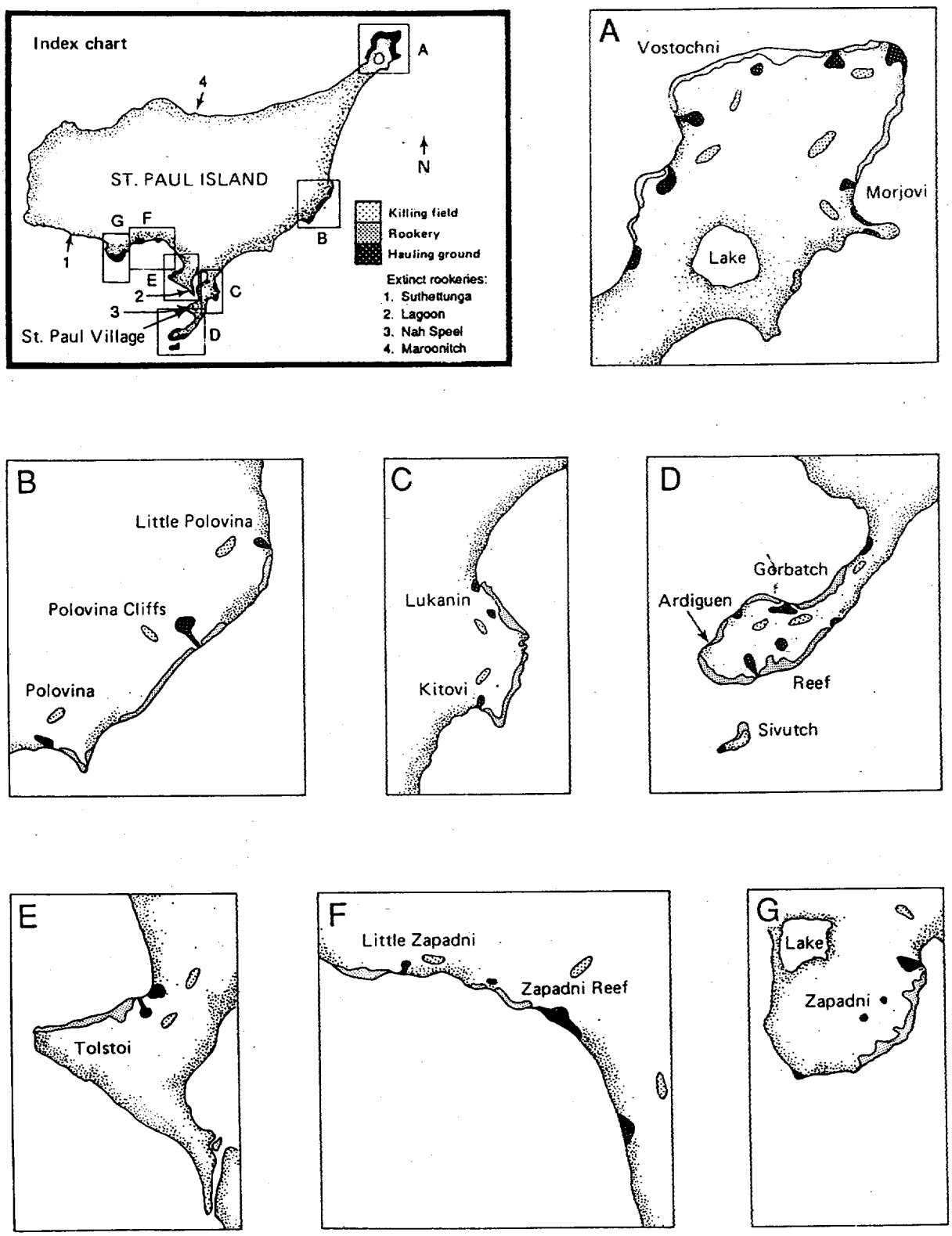

Figure 5. Locations of northern fur seal rookeries and haulouts on St. Paul Island, Alaska.

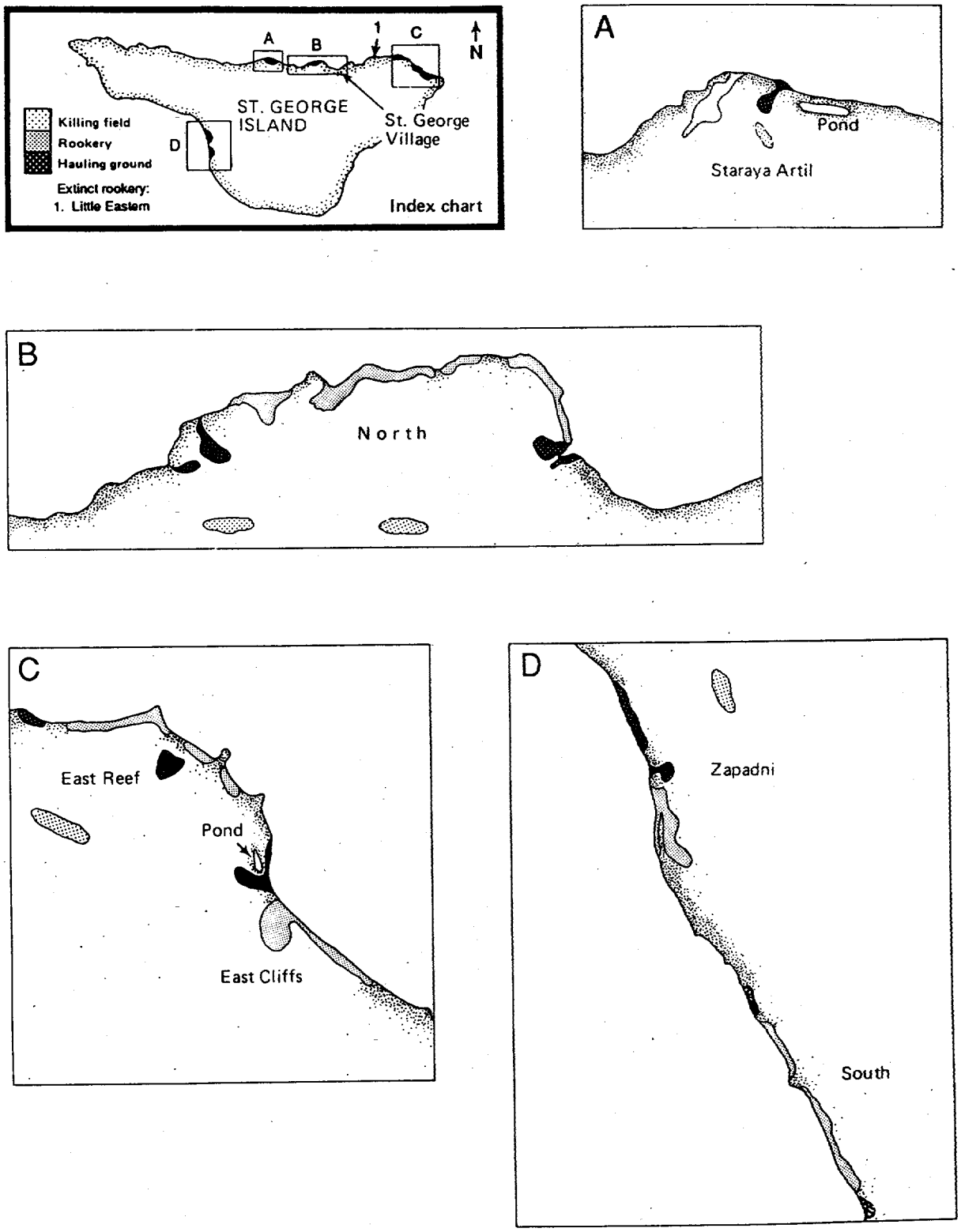

Figure 6. Locations of northern fur seal rookeries and haulouts on St. George Island, Alaska.

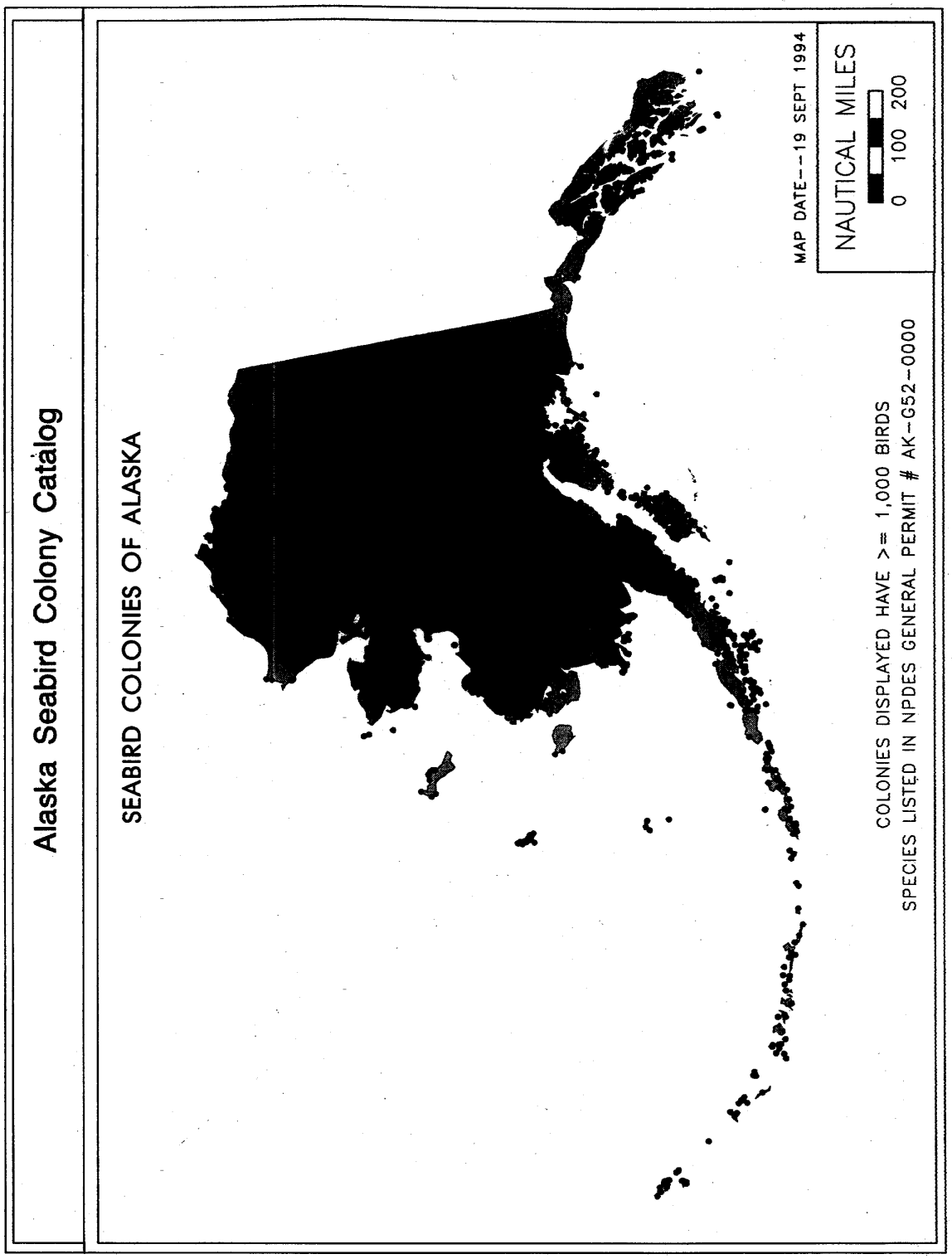

Figure 7. Locations of colonies of seabirds in Alaska.

BILLING CODE 6560–50–C

Attachment to NPDES Permit No. AK–G52–0000—State Consistency Conditions For § 401 Water Quality Certification

As Developed by a Commissioner-Level Board and Coordinated by Alaska Division of Governmental Coordination

(Kerry, Acting Director, ADEC, 12/23/94)

Position Reporting

All floating processors operating under this general NPDES permit, during any calendar day that they process and discharge waste from processing operations inside State waters, shall report geographic coordinates daily to Alaska Department of Environmental Conservation (ADEC). Reports shall be submitted by telefax or other approved communications methods to ADEC's Western District Office, Unalaska Field Office. (907) 581–1795. Reports shall be submitted once a day when a vessel is processing and discharging waste under way in State waters and shall identify geographical coordinates of the vessel at commencement of discharging. When processing within ¼ mile of the same place for more than one day inside State waters, processing vessels shall report upon the commencement of discharging and again when discharging terminates. A note shall be made in the first position report that, if known, the vessel intends to remain at that location for more than one day, and shall provide an estimate of the time to be spent at that location. A note must be made on the last position report that the vessel is no longer discharging in State waters.

Reporting Requirement

Any observed violations of the floating residues criteria of the state water quality standards shall be reported to the EPA and ADEC within 24 hours as provide in Section VII(F) of the permit.

Degraded Waterbodies

Akutan Island: Akutan Harbor west of longitude 165°46′00″ W.

Udagak Bay: waters of the bay from a line extending between latitude 53°44′32″N, longitude 166°19′14″W and latitude 53°44′04″N, longitude 166°18′32″W.

Any waterbody included in ADEC's CWA § 305(b) report or CWA § 303(d) list of waters which are ''impaired'' by seafood processor discharges or ''water quality-limited'' for dissolved oxygen or residues (i.e., floating solids, debris, sludge, deposits, foam or scum). Included are:

Gibson Cove, Kodiak, AK ID #20701–605,

Herring Cove, Sitka, AK ID #10203–603,

Jamestown Bay, Near Cannon Island, AK ID #10203–604,

Rowan Bay, Kuru Island, AK ID #10202–602,

Silver Bay, Sitka, AK ID #10203–601,

Thorn Bay, Prince of Wales Island, AK ID #10203–602, and

Ward Cove, Ketchikan, AK ID #10102–601.

Pribilof Islands

The coastal waters surrounding the Pribilof Islands (out to 3 nautical miles) are excluded from coverage under the 1995 general NPDES permit for seafood processors in Alaska. Temporary permitting provisions will be made for discharges to these waters while an interagency workgroup completes a problem identification and evaluation process.

As Developed by Alaska Department of Environmental Conservation

(Henkins, ADEC, 4/27/95)

Authorization of Mixing Zones

Offshore processors: 300 ft. radius from the point of discharge

Nearshore processors: 200 ft. radius from the point of discharge

Shore-based processors: 100 ft. radius from the point of discharge

Authorization of Zones of Deposit

One acre for offshore, nearshore and shore-based seafood processors

Non-compliance Event

The local State office is to be informed within 24 hours of a non-compliance event in addition to the report to EPA (Section VII.C.1)

Excluded Waterbodies

Ward Cove, Ketchikan, listed on the CWA § 303(d) list and given Alaska I.D. No. 10102–601 is excluded from coverage by this general permit for the reasons outlined in the State of Alaska Consistency Review dated December 23, 1994.

Forms for Notice of Intent and Annual Report

The attached Notice of Intent form and Annual Report form are incorporated into the final permit.

[FR Doc. 95–16177 Filed 7–3–95; 8:45 am]

BILLING CODE 6560–50–P

FARM CREDIT ADMINISTRATION

Fee Schedule for the Release of Consolidated Reporting System Information

AGENCY: Farm Credit Administration.

ACTION: Notice of fee schedule.

SUMMARY: This notice announces the fees to be assessed under the recently adopted Farm Credit Administration (FCA) policy statement that provided for the release of reports of condition and performance (Call Reports) and other reports containing nonexempt information (such as the Uniform Performance Report (UPR) and the Uniform Peer Performance Report (UPPR)) that are produced from the FCA's Consolidated Reporting System (CRS). The FCA will assess fees for each Call Report and other nonexempt CRS Reports sufficient to recover the cost of dissemination.

EFFECTIVE DATE: May 15, 1995.

FOR FURTHER INFORMATION CONTACT: Nan P. Mitchem, Compliance Officer, Office of Resources Management, Farm Credit Administration, 1501 Farm Credit Drive, McLean, Virginia 22102–5090, (703) 883–4073, TDD (703) 883–4444.

SUPPLEMENTARY INFORMATION: The Office of Management and Budget Circular A–130 authorizes the FCA to set charges at a level sufficient to recover the cost of dissemination.

Schedule of Fees for Individual Call Reports and Other Nonexempt CRS Reports

Payment in the form of a check or money order must accompany the request. Any request submitted without the fee payment will be returned to the requestor. The following table provides a description and the cost of each type of nonexempt CRS Report.

FCA Fees For Call Reports and Other CRS Reports

Institution Call Report is a quarterly report that contains financial data submitted by the Farm Credit institution (except for Schedules RC–F.1, ''Distressed Loan Activity''; RC–J, ''Collateral Position''; and RC–N, ''Repricing Opportunities and Relationships.'')—Cost $25.00.

Report of Operations is a quarterly report that contains a Farm Credit institution's Statement of Condition and Statement of Earnings. The report displays data for each quarter of the calendar year selected; data for the current quarter, previous year; and a percentage change between the current quarter, current year, and the current quarter, prior year.—Cost $25.00.

Analysis of Loan Loss Report is a quarterly reconciliation report of a Farm Credit institution's allowance for losses on loans and the allowance for losses on other property owned by the institution for each quarter of the calendar year. The report also includes the previous year's current quarter amounts and the percentage change between the current quarter and the same quarter in the previous year.—Cost $25.00.

Loan Performance Report is a quarterly report that lists the performing status of all of the Farm Credit institution's interest-earning and noninterest-earning loans aged according to past due status. The categories in the report are presented for each quarter of the calendar year, for the current quarter of the previous year, and the percentage change between the current quarter, current year, and the current quarter, prior year.—Cost $25.00.

Uniform Performance Report is a quarterly report that contains financial ratios, percentages, and dollar amounts of a Farm Credit institution. The report shows a condensed balance sheet and income statement, as well as other areas on capital, assets, earnings and profitability, and liquidity.—Cost $25.00.

Uniform Peer Performance Report is a quarterly report that contains all the information found in the Uniform Performance Report for a Farm Credit institution, plus additional information on peer comparison. The institution is compared to its peer group (by asset size) for peer average and percentile ranking.—Cost $25.00.

All Institutions Call Report Disks contain quarterly Call Report data in ASCII format for all Farm Credit institutions.—Cost $400.00.

Special Request

A special request for a nonexempt CRS Report (i.e., ad hoc request) will be granted only when the benefit to the FCA significantly outweighs the burden to the Agency in complying with the request. When granting a special request, the Agency shall recover the cost of responding to the request, including the cost of collecting and processing, as well as disseminating the information.

Waiver

Requests for fee waivers may be granted to educational institutions, researchers, Government agencies, newspapers, and other parties, only when the Agency determines that the benefit derived from releasing the information exceeds the fees being waived.

Dated: June 29, 1995.

Floyd Fithian,

Secretary, Farm Credit Administration Board.

[FR Doc. 95–16373 Filed 7–3–95; 8:45 am]

BILLING CODE 6705–01–P

FEDERAL MARITIME COMMISSION

Notice of Agreement(s) Filed

The Federal Maritime Commission hereby gives notice of the filing of the following agreement(s) pursuant to section 5 of the Shipping Act of 1984.

Interested parties may inspect and obtain a copy of each agreement at the Washington, D.C. Office of the Federal Maritime Commission, 800 North Capitol Street, N.W., 9th Floor. Interested parties may submit comments on each agreement to the Secretary, Federal Maritime Commission, Washington, D.C. 20573, within 10 days after the date of the **Federal Register** in which this notice appears. The requirements for comments are found in § 572.603 of Title 46 of the Code of Federal Regulations. Interested persons should consult this section before communicating with the Commission regarding a pending agreement.

Agreement No.: 202–010987–022

Title: Latin American Shipping Association

Parties:

Crowley American Transport, Inc.
King Ocean Central America, S.A. (''King Ocean'')
Maersk Line
SeaBoard Marine, Ltd.
Sea-Land Service, Inc.
Tropical Shipping and Construction Co. Ltd. (''Tropical Shipping'')

Synopsis: The proposed amendment limits King Ocean's and Tropical Shipping's participation to the Central America trade area. It also adds West Coast Ports of the United States, Panama, ports and points on the West Coast of Mexico and clarifies the geographic scope of Central America. In addition, it adds a new provision to the Voting Procedures which pertains to the three trade areas of the Agreement, establishes the notice requirements for filing of Independent Action rates in Article 13—Independent Action, makes other non-substantive changes and restates the Agreement.

Agreement No.: 203–011505

Title: Flota Mercante Grancolombiana/Nordana Line Slot Charter and Sailing Agreement

Parties: Flota Mercante Grancolombiana, S.A.
Nordana Line AS

Synopsis: The proposed agreement authorizes the parties to exchange and charter space from one another, and to rationalize sailings in the trade between ports and points in Puerto Rico, the Mediterranean coasts of Spain and France, and ports and points in Italy, Colombia, Venezuela, Dominican Republic and St. Vincent. The parties may also discuss and agree upon rules, rates, regulations, tariffs, terms and conditions of service contracts which are maintained by any party or by any conference to which any party may be a member. Adherence to any agreement is voluntary.

Agreement No.: 224–200488–002

Title: Port of Oakland/Yang Ming Marine Transport Corporation Terminal Agreement

Parties: Port of Oakland (''Port'')
Yang Ming Marine Transport Corporation

Synopsis: The proposed amendment revises the tariff compensation for wharfage to provide that the tarriff percentage reduction be specified as a percentage of a fixed dollar amount per TEU instead of a percentage of the Port's tariff charge.

Dated: June 28, 1995.

By Order of the Federal Maritime Commission.

Joseph C. Polking,

Secretary.

[FR Doc. 95–16317 Filed 7–3–95; 8:45 am]

BILLING CODE 6730–01–M

FEDERAL RESERVE SYSTEM

John C. Bradshaw, et al.; Change in Bank Control Notices; Acquisitions of Shares of Banks or Bank Holding Companies

The notificants listed below have applied under the Change in Bank Control Act (12 U.S.C. 1817(j)) and § 225.41 of the Board's Regulation Y (12 CFR 225.41) to acquire a bank or bank holding company. The factors that are considered in acting on the notices are set forth in paragraph 7 of the Act (12 U.S.C. 1817(j)(7)).

The notices are available for immediate inspection at the Federal Reserve Bank indicated. Once the notices have been accepted for processing, they will also be available for inspection at the offices of the Board of Governors. Interested persons may express their views in writing to the Reserve Bank indicated for that notice or to the offices of the Board of Governors. Comments must be received not later than July 17, 1995.

A. Federal Reserve Bank of Chicago (James A. Bluemle, Vice President) 230 South LaSalle Street, Chicago, Illinois 60690:

1. John C. Bradshaw, Wheaton, Illinois; to acquire an additional 18.76 percent, for a total of 43.69 percent, of the voting shares of First Community Bancshares Corp., Milton, Wisconsin, and thereby indirectly acquire First Community Bank, Milton, Wisconsin, and Citizens Savings Bank, Anamosa, Iowa.

B. Federal Reserve Bank of Kansas City (John E. Yorke, Senior Vice President) 925 Grand Avenue, Kansas City, Missouri 64198

1. Samuel W. Carmack V, Colleyville, Texas; to acquire a total of 20 percent; Samuel W. Carmack VI College Trust and Laura K. Carmack College Trust, both of Colleyville, Texas, each to acquire a total of 2.5 percent; Binger Agency, Inc., Colleyville, Texas, to acquire a total of 2.7 percent; Patricia C. Ross, Longview, Texas, to acquire a total of 20 percent; La Casa Mia Rentals, Longview, Texas, to acquire a total of 2.5 percent; Justin P. Ross College Trust, Longview, Texas, to acquire a total of 2.2 percent; Marian Kay Ross College Trust, Longview, Texas, to acquire a total of 2.0 percent; and Jennifer L. Ross College Trust, Longview, Texas, to acquire a total of 1.9 percent, of the voting shares of Midstate Bancorp, Inc., Hinton, Oklahoma, and thereby indirectly acquire First Community Bank, Blanchard, Oklahoma, and Legacy Bank, Hinton, Oklahoma.

Board of Governors of the Federal Reserve System, June 27, 1995.

Jennifer J. Johnson,

Deputy Secretary of the Board.

[FR Doc. 95–16379 Filed 7–3–95; 8:45 am]

BILLING CODE 6210–01–F

Dakota Heritage Banking Corporation, et al.; Formations of; Acquisitions by; and Mergers of Bank Holding Companies

The companies listed in this notice have applied for the Board's approval under section 3 of the Bank Holding Company Act (12 U.S.C. 1842) and § 225.14 of the Board's Regulation Y (12 CFR 225.14) to become a bank holding company or to acquire a bank or bank holding company. The factors that are considered in acting on the applications are set forth in section 3(c) of the Act (12 U.S.C. 1842(c)).

Each application is available for immediate inspection at the Federal Reserve Bank indicated. Once the application has been accepted for processing, it will also be available for inspection at the offices of the Board of Governors. Interested persons may express their views in writing to the Reserve Bank or to the offices of the Board of Governors. Any comment on an application that requests a hearing must include a statement of why a written presentation would not suffice in lieu of a hearing, identifying specifically any questions of fact that are in dispute and summarizing the evidence that would be presented at a hearing.

Unless otherwise noted, comments regarding each of these applications must be received not later than July 28, 1995.

A. Federal Reserve Bank of Minneapolis (James M. Lyon, Vice President) 250 Marquette Avenue, Minneapolis, Minnesota 55480:

1. Dakota Heritage Banking Corporation, Chancellor, South Dakota; to become a bank holding company by acquiring at least 96.67 percent of the voting shares of Dakota Heritage State Bank, Chancellor, South Dakota.

B. Federal Reserve Bank of Dallas (Genie D. Short, Vice President) 2200 North Pearl Street, Dallas, Texas 75201-2272:

1. Central Corporation, Monroe, Louisiana; to acquire 9 percent of the voting shares of First United Bank of Farmerville, Farmerville, Louisiana.

2. Citizens National Bancshares of Bossier, Inc., Bossier City, Louisiana; to become a bank holding company by acquiring 100 percent of the voting shares of Citizens National Bank of Bossier City, Bossier City, Louisiana.

Board of Governors of the Federal Reserve System, June 28, 1995.

Jennifer J. Johnson,

Deputy Secretary of the Board.

[FR Doc. 95–16382 Filed 7–3–95; 8:45 am]

BILLING CODE 6210–01–F

Financial Trust Corp, et al.; Formations of; Acquisitions by; and Mergers of Bank Holding Companies

The companies listed in this notice have applied for the Board's approval under section 3 of the Bank Holding Company Act (12 U.S.C. 1842) and § 225.14 of the Board's Regulation Y (12 CFR 225.14) to become a bank holding company or to acquire a bank or bank holding company. The factors that are considered in acting on the applications are set forth in section 3(c) of the Act (12 U.S.C. 1842(c)).

Each application is available for immediate inspection at the Federal Reserve Bank indicated. Once the application has been accepted for processing, it will also be available for inspection at the offices of the Board of Governors. Interested persons may express their views in writing to the Reserve Bank or to the offices of the Board of Governors. Any comment on an application that requests a hearing must include a statement of why a written presentation would not suffice in lieu of a hearing, identifying specifically any questions of fact that are in dispute and summarizing the evidence that would be presented at a hearing.

Unless otherwise noted, comments regarding each of these applications must be received not later than July 27, 1995.

A. Federal Reserve Bank of Philadelphia (Michael E. Collins, Senior Vice President) 100 North 6th Street, Philadelphia, Pennsylvania 19105:

1. Financial Trust Corp, Carlisle, Pennsylvania; to acquire 100 percent of the voting shares of Washington County National Bank, Williamsport, Maryland.

B. Federal Reserve Bank of Minneapolis (James M. Lyon, Vice President) 250 Marquette Avenue, Minneapolis, Minnesota 55480:

1. Norwest Corporation, Minneapolis Minnesota; to acquire 100 percent of the voting shares of The First National Bank in Big Spring, Big Spring, Texas.

Board of Governors of the Federal Reserve System, June 27, 1995.

Jennifer J. Johnson,

Deputy Secretary of the Board.

[FR Doc. 95–16380 Filed 7–3–95; 8:45 am]

BILLING CODE 6210–01–F

Ramsey Financial Corporation; Acquisition of Company Engaged in Permissible Nonbanking Activities

The organization listed in this notice has applied under § 225.23(a)(2) or (f) of the Board's Regulation Y (12 CFR 225.23(a)(2) or (f)) for the Board's approval under section 4(c)(8) of the Bank Holding Company Act (12 U.S.C. 1843(c)(8)) and § 225.21(a) of Regulation Y (12 CFR 225.21(a)) to acquire or control voting securities or assets of a company engaged in a nonbanking activity that is listed in § 225.25 of Regulation Y as closely related to banking and permissible for bank holding companies. Unless otherwise noted, such activities will be conducted throughout the United States.

The application is available for immediate inspection at the Federal Reserve Bank indicated. Once the application has been accepted for processing, it will also be available for inspection at the offices of the Board of Governors. Interested persons may express their views in writing on the

question whether consummation of the proposal can ''reasonably be expected to produce benefits to the public, such as greater convenience, increased competition, or gains in efficiency, that outweigh possible adverse effects, such as undue concentration of resources, decreased or unfair competition, conflicts of interests, or unsound banking practices.'' Any request for a hearing on this question must be accompanied by a statement of the reasons a written presentation would not suffice in lieu of a hearing, identifying specifically any questions of fact that are in dispute, summarizing the evidence that would be presented at a hearing, and indicating how the party commenting would be aggrieved by approval of the proposal.

Comments regarding the application must be received at the Reserve Bank indicated or the offices of the Board of Governors not later than July 17, 1995.

A. Federal Reserve Bank of Minneapolis (James M. Lyon, Vice President) 250 Marquette Avenue, Minneapolis, Minnesota 55480:

1. Ramsey Financial Corporation, Devils Lake, North Dakota; to acquire through its subsidiary, Heritage Federal Savings Bank, fsb, Cando, North Dakota, the Rugby, Cavalier, and Bottineau, North Dakota branches of First Bank, fsb, Fargo, North Dakota, and thereby engage in operating a savings association, pursuant to § 225.25(b)(9) of the Board's Regulation Y.

Board of Governors of the Federal Reserve System, June 27, 1995.

Jennifer J. Johnson,

Deputy Secretary of the Board.

[FR Doc. 95–16381 Filed 7–3–95; 8:45 am]

BILLING CODE 6210–01–F

First National Corporation North Dakota, et al.; Notice of Applications to Engage de novo in Permissible Nonbanking Activities

The companies listed in this notice have filed an application under § 225.23(a)(1) of the Board's Regulation Y (12 CFR 225.23(a)(1)) for the Board's approval under section 4(c)(8) of the Bank Holding Company Act (12 U.S.C. 1843(c)(8)) and § 225.21(a) of Regulation Y (12 CFR 225.21(a)) to commence or to engage *de novo*, either directly or through a subsidiary, in a nonbanking activity that is listed in § 225.25 of Regulation Y as closely related to banking and permissible for bank holding companies. Unless otherwise noted, such activities will be conducted throughout the United States.

Each application is available for immediate inspection at the Federal Reserve Bank indicated. Once the application has been accepted for processing, it will also be available for inspection at the offices of the Board of Governors. Interested persons may express their views in writing on the question whether consummation of the proposal can ''reasonably be expected to produce benefits to the public, such as greater convenience, increased competition, or gains in efficiency, that outweigh possible adverse effects, such as undue concentration of resources, decreased or unfair competition, conflicts of interests, or unsound banking practices.'' Any request for a hearing on this question must be accompanied by a statement of the reasons a written presentation would not suffice in lieu of a hearing, identifying specifically any questions of fact that are in dispute, summarizing the evidence that would be presented at a hearing, and indicating how the party commenting would be aggrieved by approval of the proposal.

Unless otherwise noted, comments regarding the applications must be received at the Reserve Bank indicated or the offices of the Board of Governors not later than July 19, 1995.

A. Federal Reserve Bank of Minneapolis (James M. Lyon, Vice President) 250 Marquette Avenue, Minneapolis, Minnesota 55480:

1. First National Corporation North Dakota, Grand Forks, North Dakota; to engage *de novo* in making, acquiring, or servicing loans for its own account, pursuant to § 225.25(b)(1) of the Board's Regulation Y. These activities will be conducted throughout the states of Minnesota and North Dakota.

2. First National Corporation North Dakota, Grand Forks, North Dakota; to engage *de novo* through its subsidiary, Dakota First Insurance Company, Grand Forks, North Dakota, in underwriting and reinsuring the credit life coverage on loans issued by its banking subsidiary, First National Bank North Dakota, Grand Forks, North Dakota, pursuant to § 225.25(b)(8)(i) of the Board's Regulation Y. These activities will be conducted throughout the states of Minnesota and North Dakota.

3. First State Banking Corporation, Alcester, South Dakota; to engage *de novo* in providing data processing services for other financial institutions, pursuant to § 225.25(b)(7) of the Board's Regulation Y. This activity will be conducted throughout the state of South Dakota.

Board of Governors of the Federal Reserve System, June 28, 1995.

Jennifer J. Johnson,

Deputy Secretary of the Board.

[FR Doc. 95-16383 Filed 7-3-95; 8:45 am]

BILLING CODE 6210-01-F

Merlyn Sommervold, et al.; Change in Bank Control Notices; Acquisitions of Shares of Banks or Bank Holding Companies

The notificants listed below have applied under the Change in Bank Control Act (12 U.S.C. 1817(j)) and § 225.41 of the Board's Regulation Y (12 CFR 225.41) to acquire a bank or bank holding company. The factors that are considered in acting on the notices are set forth in paragraph 7 of the Act (12 U.S.C. 1817(j)(7)).

The notices are available for immediate inspection at the Federal Reserve Bank indicated. Once the notices have been accepted for processing, they will also be available for inspection at the offices of the Board of Governors. Interested persons may express their views in writing to the Reserve Bank indicated for that notice or to the offices of the Board of Governors. Comments must be received not later than July 19, 1995.

A. Federal Reserve Bank of Minneapolis (James M. Lyon, Vice President) 250 Marquette Avenue, Minneapolis, Minnesota 55480:

1. Merlyn and Sherran Sommervold, Chancellor, South Dakota; to acquire an additional 18.50 percent, for a total of 23.79 percent, of the voting shares of First State Banking Corporation, Alcester, South Dakota, and thereby indirectly acquire State Bank of Alcester, Alcester, South Dakota, and Dakota Heritage State Bank, Chancellor, South Dakota.

B. Federal Reserve Bank of Kansas City (John E. Yorke, Senior Vice President) 925 Grand Avenue, Kansas City, Missouri 64198:

1. Timothy Lee Sundgren, Salida, Colorado; Robert Jack Breidenthal, Jr., together with Constance Lynn Breidenthal, both of Bonner Springs, Kansas; Francis Joseph Karlin, Las Vegas, Nevada; Harry Barnhart Phelps and Trustee for Harry Barnhart Phelps, Revocable Living Trust, Oakley, Kansas; and Joe F. Jenkins, Jr., Tonganoxie, Kansas; each to acquire 20 percent of the voting shares of Financial Services of the Rockies, Inc., Colorado Springs, Colorado, and thereby indirectly acquire Bank of the Rockies, N.A., Colorado Springs, Colorado.

C. Federal Reserve Bank of Dallas (Genie D. Short, Vice President) 2200

North Pearl Street, Dallas, Texas 75201-2272:

1. Ronald Franklin Yates, Sr., Marble Falls, Texas; to acquire an additional 3.34 percent, for a total of 13.31 percent, of the voting shares of Marble Falls National Bancshares, Inc., Marble Falls, Texas, and thereby indirectly acquire Marble Falls National Bank, Marble Falls, Texas.

Board of Governors of the Federal Reserve System, June 28, 1995.

Jennifer J. Johnson,

Deputy Secretary of the Board.

[FR Doc. 95–16384 Filed 7–3–95; 8:45 am]

BILLING CODE 6210–01–F

FEDERAL TRADE COMMISSION

[File No. 932–3112]

Alpine Industries, Inc., et al.; Proposed Consent Agreement With Analysis to Aid Public Comment

AGENCY: Federal Trade Commission.

ACTION: Proposed consent agreement.

SUMMARY: In settlement of alleged violations of federal law prohibiting unfair acts and practices and unfair methods of competition, this consent agreement, accepted subject to final Commission approval, would prohibit, among other things, two Minnesota-based sister companies and their principal officers from making unsubstantiated claims about the ability of any air cleaning product to eliminate, remove, clear or clean any indoor air pollutant—or any quantity of indoor air pollutants—from a user's environment.

DATES: Comments must be received on or before September 5, 1995.

ADDRESSES: Comments should be directed to FTC/Office of the Secretary, Room 159, 6th St. and Pa. Ave., NW, Washington, D.C. 20580.

FOR FURTHER INFORMATION CONTACT: Jeffrey Klurfeld, Kerry O'Brien, and Linda Badger, San Francisco Regional Office, Federal Trade Commission, 901 Market Street, Suite 570, San Francisco, CA 94103. (415) 744–7920.

SUPPLEMENTARY INFORMATION: Pursuant to section 6(f) of the Federal Trade Commission Act, 38 Stat. 721, 15 U.S.C. 46 and § 2.34 of the Commission's rules of practice (16 CFR 2.34), notice is hereby given that the following consent agreement containing a consent order to cease and desist, having been filed with and accepted, subject to final approval, by the Commission, has been placed on the public record for a period of sixty (60) days. Public comment is invited. Such comments or views will be considered by the Commission and will be available for inspection and copying at its principal office in accordance with § 4.9(b)(6)(ii) of the Commission's rules of practice (16 CFR 4.9(b)(6)(ii)).

Agreement Containing Consent Order to Cease and Desist

The Federal Trade Commission having initiated an investigation of certain acts and practices of Alpine Industries, Inc. and Living Air Corp., corporations, and William J. Converse individually and as an officer of Alpine Industries, Inc. and Living Air Corp. (''proposed respondents''), and it now appearing that proposed respondents are willing to enter into an agreement containing an order to cease and desist from the use of the acts and practices being investigated,

It is hereby agreed by and between proposed respondents, by their duly authorized officers, and their attorney, and counsel for the Federal Trade Commission that:

1. Proposed respondent Alpine Industries, Inc. is a corporation organized, existing, and doing business under and by virtue of the laws of the State of Tennessee, with its office and principal place of business located at 9199 Central Avenue, NE., in the City of Blaine, State of Minnesota.

Proposed respondent Living Air Corp. is a corporation organized, existing, and doing business under and by virtue of the laws of the State of Tennessee, with its office and principal place of business located at 11673 Tulip Street, in the City of Coon Rapids, State of Minnesota.

Proposed respondent William J. Converse is an officer of Alpine Industries, Inc. and Living Air Corp. He formulates, directs, and controls the policies, acts and practices of Alpine Industries, Inc. and Living Air Corp. and his address is the same as that of Living Air Corp.

2. Proposed respondents admit all the jurisdictional facts set forth in the draft of complaint.

3. Proposed respondents waive:

a. Any further procedural steps;

b. The requirement that the Commission's decision contain a statement of findings of fact and conclusions of law; and

c. All rights to seek judicial review or otherwise to challenge or contest the validity of the order entered pursuant to this agreement.

4. This agreement shall not become part of the public record of the proceeding unless and until it is accepted by the Commission. If this agreement is accepted by the Commission, it, together with the draft of complaint contemplated thereby, will be placed on the public record for a period of sixty (60) days and information in respect thereto publicly released. The Commission thereafter may either withdraw its acceptance of this agreement and so notify the proposed respondents, in which event it will take such action as it may consider appropriate, or issue and serve its complaint (in such form as the circumstances may require) and decision, in disposition of the proceeding.

5. This agreement is for settlement purposes only and does not constitute an admission by proposed respondents of facts, other than jurisdictional facts, or of violations of law as alleged in the draft complaint.

6. This agreement contemplates that, if it is accepted by the Commission, and if such acceptance is not subsequently withdrawn by the Commission pursuant to the provisions of § 2.34 of the Commission's rules, the Commission may, without further notice to proposed respondents, (a) issue its compliant corresponding in form and substance with the draft of complaint and its decision containing the following order to cease and desist in disposition of the proceeding and (b) make information public in respect thereto. When so entered, the order to cease and desist shall have the same force and effect and may be altered, modified or set aside in the same manner and within the same time provided by statute for other orders. The order shall become final upon service. Delivery by the U.S. Postal Service of the complaint and decision containing the agreed-to order to proposed respondents' addresses as stated in this agreement shall constitute service. Proposed respondents waive any right they may have to any other manner of service. The complaint may be used in construing the terms of the order, and no agreement, understanding, representation, or interpretation not contained in the order or the agreement may be used to vary or contradict the terms of the order.

7. Proposed respondents have read the proposed complaint and order contemplated hereby. They understand that once the order has been issued, they will be required to file one or more compliance reports showing that they have fully complied with the order. Proposed respondents further understand that they may be liable for civil penalties in the amount provided by law for each violation of the order after it becomes final.

Order

For the purposes of this Order, the following definition shall apply:

A. The term ''air cleaning product'' shall mean any products, equipment, or appliance designed or advertised to remove, treat, or reduce the level of any pollutant(s) in the air.

B. The terms ''indoor air pollutant(s)'' or ''pollutant(s)'' shall mean one or more of the following: Formaldehyde, sulfur dioxide, ammonia, trichlorethylene, benzene, chloroform, carbon tetrachloride, odors, nitrogen dioxide, mold, mildew, bacteria, dust, cigarette smoke, pollen, and hydrocarbons, or any other gaseous or particulate matter found in indoor air.

C. The term ''competent and reliable scientific evidence'' shall mean tests, analyses, research, studies or other evidence based on the expertise of professionals in the relevant area, that has been conducted and evaluated in an objective manner by persons qualified to do so, using procedures generally accepted in the profession to yield accurate and reliable results.

I

It is ordered that respondents Alpine Industries, Inc. and Living Air Corp., corporations, their successors and assigns, and their officers; William J. Converse, individually and as an officer of Alpine Industries, Inc. and Living Air Corp.; and respondents' agents, representatives, and employees, directly or through any corporation, subsidiary, division or other device, in connection with the manufacturing, labelling, advertising, promotion, offering for sale, sale, or distribution of any air cleaning product in or affecting commerce, as ''commerce'' is defined in the Federal Trade Commission Act, do forthwith cease and desist from representing, in any manner, directly or by implication,

A. Such product's ability to eliminate, remove, clear, or clean any indoor air pollutant from a user's environment; or

B. Such product's ability to eliminate, remove, clear, or clean any quantity of indoor air pollutants from a user's environment;

unless, at the time of making such representation, respondents posses and rely upon competent and reliable scientific evidence that substantiates the representation.

II

It is further ordered that respondents Alpine Industries, Inc. and Living Air Corp., corporations, their successors and assigns, and their officers; William J. Converse, individually and as an officer of Alpine Industries, Inc. and Living Air Corp.; and respondent's agents, representatives, and employees, directly or through any corporation, subsidiary, division or other device, in connection with the manufacturing, labelling, advertising, promotion, offering for sale, sale, or distribution of any air cleaning product in or affecting commerce, as ''commerce'' is defined in the Federal Trade Commission Act, do forthwith cease and desist from representing, in any manner, directly or by implication, that:

A. The use of ozone is more effective in cleaning or purifying indoor air than other air cleaning methods;

B. The product does not create harmful by-products; or

C. When used as directed, the product prevents or provides relief from any medical or health-related condition;

unless at the time of making such representation, respondents possess and rely upon competent and reliable scientific evidence that substantiates the representation.

III

It is further ordered that respondents Alpine Industries, Inc. and Living Air Corp., corporations, their successors and assigns, and their officers; William J. Converse, individually and as an officer of Alpine Industries, Inc. and Living Air Corp.; and respondent's agents, representatives and employees, directly or through any corporation, subsidiary, division or other device, in connection with the manufacturing, labelling, advertising, promotion, offering for sale, sale, or distribution of any air cleaning product in or affecting commerce, as ''commerce'' is defined in the Federal Trade Commission Act, do forthwith cease and desist from representing, in any manner, directly or by implication, the efficacy, performance, or health-related benefit of any such product, unless, at the time of making such representation, respondents possess and rely upon competent and reliable evidence, which when appropriate must be competent and reliable scientific evidence, that substantiates the representation.

IV

It is further ordered that for five (5) years after the last date of dissemination of any representation covered by this Order, respondents, or their successors and assigns, shall maintain and upon request make available to the Federal Trade Commission for inspection and copying:

A. All materials that were relied upon in disseminating such representation; and

B. All tests, reports, studies, surveys, demonstrations, or other evidence in their possession or control that contradict, qualify, or call into question such representation, or the basis relied upon for such representation, including complaints from consumers.

V

It is further ordered that respondents shall notify the Commission at least thirty (30) days prior to any proposed change in the corporate respondents such as dissolution, assignment or sale resulting in the emergence of a successor corporation, the creation or dissolution of subsidiaries, or any other change in the corporations which may affect compliance obligations arising out of this Order.

VI

It is further ordered that the individual respondent shall, for a period of five (5) years after the date of service of this Order upon him, promptly notify the Commission, in writing, of his discontinuance of his present business or employment and of his affiliation with a new business or employment. For each such new affiliation, the notice shall include the name and address of the new business or employment, a statement of the nature of the new business or employment, and a description of respondent's duties and responsibilities in connection with the new business or employment.

VII

It is further ordered that the corporate respondents shall, within ten (10) days from the date of service of this Order upon them, distribute a copy of this Order to each of their officers, agents, representatives, independent contractors, and employees involved in the preparation and placement of advertisements or promotional materials, or who is in communication with customers or prospective customers, or who has any responsibilities with respect to the subject matter of this Order; and for a period of three (3) years, from the date of issuance of this Order, distribute a copy of this Order to all of respondents' future such officers, agents, representatives, independent contractors, and employees.

VIII

It is further ordered that the corporate respondents shall, within ten (10) days from the date of service of this Order upon them, deliver by first class mail or in person a copy of this Order or Attachment A to each of their present distributors or retailers of their ozone generators.

It is further ordered that respondents shall, within sixty (60) days from the date of service of this order upon them, and at such other times as the

Commission may require, file with the Commission a report, in writing, setting forth in detail the manner and form in which they have complied with this Order.

Attachment A

[To Be Printed on company letterhead]

[Date]

Dear [distributor]: Alpine Industries, Inc. and Living Air Corp. recently settled a civil dispute with the Federal Trade Commission (''FTC'') regarding certain claims for our product, the Living Air Model XL15 ozone generator. As a part of the settlement, we are required to make sure that our distributors and wholesalers stop using or distributing advertisements or promotional materials containing those claims.

We have entered into this agreement to resolve a dispute with the FTC on certain claims it contends are not substantiated. The agreement entered into is not an admission that we have violated the law. However, as part of the agreement, we will not be making certain claims unless they are supported by competent and reliable scientific evidence.

Your assistance will be greatly appreciated in fulfilling the terms of the agreement. We have agreed not to make the following claims unless we have competent and reliable scientific evidence: (1) That the product eliminates or clears indoor air pollutants; (2) that the product creates no harmful by-products; (3) that the product provides relief from specific medical or health-related conditions; and (4) that the use of ozone is more effective in cleaning or purifying indoor air than other air cleaning products such as filters.

We ask each or our dealers, distributors, and sales managers to cooperate with us to ensure that no current advertising or promotional material makes these claims. Again, your assistance in this regard will be greatly appreciated.

Sincerely,

William J. Converse,

President, Alpine Industries, Inc., and Living Air Corp.

Analysis of Proposed Consent Order to Aid Public Comment

The Federal Trade Commission has accepted an agreement, subject to final approval, to a proposed consent order from respondents Alpine Industries, Inc. and Living Air Corp., Tennessee corporations, and William J. Converse, individually and as an officer of the corporations.

The proposed consent order has been placed on the public record for sixty (60) days for reception of comments by interested persons. Comments received during this period will become part of the public record. After sixty (60) days, the Commission will again review the agreement and the comments received and will decide whether it should withdraw from the agreement and take other appropriate action or make final the agreement's proposed order.

This matter concerns the advertising of ozone generators, including the ''Living Air Model XL15,'' as air cleaning products for use in homes, offices, and other commercial establishments. The Commission's complaint charges that respondents' advertising contained unsubstantiated representations concerning the efficacy of their ozone generator in cleaning the air.

Specifically, the complaint alleges that the respondents lacked substantiation for their claims that: (1) When used as directed, the Living Air Model XL15 eliminates, removes, clears, or cleans formaldehyde, sulfur dioxide, ammonia, trichlorethylene, benzene, chloroform, carbon tetrachloride, odors, nitrogen dioxide, mold, mildew, bacteria, dust, cigarette smoke, pollen, and hydrocarbons from a user's environment; (2) the use of ozone is more effective in cleaning or purifying indoor air than air cleaning products that use filters; (3) the Living Air Model XL15 does not create harmful by-products; and (4) when used as directed, the Living Air Model XL15 prevents or provides relief from colds, flu, allergies, asthma, sinus headaches, and ear, eye, nose and throat infections.

The proposed consent order contains provisions designed to remedy the violations charged and to prevent the respondents from engaging in similar acts and practices in the future.

Part I of the proposed order prohibits respondents from representing any air cleaning product's ability to eliminate, remove, clear, or clean any indoor air pollutant or any quantity of indoor air pollutants from a user's environment, unless respondents possess competent and reliable scientific evidence that substantiates the representation.

Similarly, Part II of the proposed order prohibits respondents from claiming that (1) the use of ozone is more effective in cleaning or purifying indoor air than other air cleaning methods, (2) any air cleaning product does not create harmful by-products, or (3) when used as directed, any air cleaning product prevents or provides relief from any medical or health-related condition, unless respondents possess competent and reliable scientific evidence that substantiates the representation.

As fencing-in relief, Part III of the proposed order provides that if respondents represent the efficacy, performance, or health-related benefit of any air cleaning product, respondents must possess competent and reliable evidence that substantiates the representation.

The proposed order also requires respondents to maintain materials relied upon to substantiate claims covered by the order; to notify the Commission of certain changes in the business or employment of the named individual respondent; to provide a copy of the consent agreement to their employees involved in the preparation and placement of respondents' advertisements, or in communication with respondents' customer or prospective customers; to distribute a copy of the order or Attachment A of the consent agreement to their present distributors or retailers of their ozone generators; and to file one or more reports detailing compliance with the order.

The purpose of this analysis is to facilitate public comment on the proposed order. It is not intended to constitute an official interpretation of the agreement and proposed order or to modify in any way their terms.

Donald S. Clark,

Secretary.

[FR Doc. 95–16444 Filed 7–3–95; 8:45 am]

BILLING CODE 6750–01–M

[File No. 932–3077]

Body Wise International, Inc.; Proposed Consent Agreement With Analysis to Aid Public Comment

AGENCY: Federal Trade Commission.

ACTION: Proposed consent agreement.

SUMMARY: In settlement of alleged violations of federal law prohibiting unfair acts and practices and unfair methods of competition, this consent agreement, accepted subject to final Commission approval, would prohibit, among other things, a Carlsbad, California based company from making false claims that a food, drug, or nutritional supplement helps users achieve or maintain weight loss without diet or exercise, and would bar unsubstantiated weight-loss, weight-loss maintenance, cholesterol-reduction, or other health benefits claims for such products. In addition, it would prohibit the deceptive use of consumer testimonials or professional endorsements, and would require clear disclosures of any financial connection between endorsers and the respondent or its products.

DATES: Comments must be received on or before September 5, 1995.

ADDRESSES: Comments should be directed to: FTC/Office of the Secretary,

Room 159, 6th St. and Pa. Ave., NW., Washington, DC 20508.

FOR FURTHER INFORMATION CONTACT: Jeffrey A. Klurfeld or David Newman, San Francisco Regional Office, Federal Trade Commission, 901 Market Street, Suite 570, San Francisco, California 94103. (415) 744–7920.

SUPPLEMENTARY INFORMATION: Pursuant to section 6(f) of the Federal Trade Commission Act, 38 Stat. 721, 15 U.S.C. 46 and § 2.34 of the Commission's rules of practice (16 CFR 2.34), notice is hereby given that the following consent agreement containing a consent order to cease and desist, having been filed with and accepted, subject to final approval, by the Commission, has been placed on the public record for a period of sixty (60) days. Public comment is invited. Such comments or views will be considered by the Commission and will be available for inspection and copying at its principal office in accordance with § 4.9(b)(6)(ii) of the Commission's rules of practice (16 CFR 4.9(b)(6)(ii).

Agreement Containing Consent Order to Cease and Desist

The Federal Trade Commission having initiated an investigation of certain acts and practices of Body Wise International, Inc. (''Body Wise''), a corporation, and it now appearing that Body Wise, sometimes referred to as proposed respondent, is willing to enter into an agreement containing an order to cease and desist from the acts and practices being investigated,

It is hereby agreed by and between Body Wise, by its duly authorized officers and its attorneys, and counsel for the Federal Trade Commission that;

1. Proposed respondent Body Wise is a corporation organized, existing and doing business under and by virtue of the laws of the State of Nevada, with its office and principal place of business at 6350 Palomar Oaks Court, Suite A Carlsbad, California 92009.

2. Proposed respondent admits all the jurisdictional facts set forth in the draft of complaint.

3. Proposed respondent waives:

(a) Any further procedural steps;

(b) The requirement that the Commission's decision contain a statement of findings of fact and conclusions of law;

(c) All rights to seek judicial review or otherwise to challenge or contest the validity of the order entered pursuant to this agreement; and

(d) Any claim under the Equal Access to Justice Act.

4. This agreement shall not become part of the public record of the proceeding unless and until it is accepted by the Commission. If this agreement is accepted by the Commission, it, together with the draft of complaint contemplated thereby, will be placed on the public record for a period of sixty (60) day, and information in respect thereto publicly released. The Commission thereafter may either withdraw its acceptance of this agreement and so notify the proposed respondent, in which event it will take such action as it may consider appropriate, or issue and serve its complaint (in such form as the circumstances may require) and decision, in disposition of the proceeding.

5. This agreement is for settlement purposes only and does not constitute an admission by proposed respondents of facts, other than jurisdictional facts, or of violations of law as alleged in the draft of complaint.

6. This agreement contemplates that, if it is accepted by the Commission, and if such acceptance is not subsequently withdrawn by the Commission pursuant to the provisions of § 2.34 of the Commission's rules, the Commission may, without further notice to proposed respondent, (1) issue its complaint corresponding in form and substance with the draft of complaint and its decision containing the following order to cease and desist in disposition of the proceeding and (2) make information public in respect thereto. When so entered, the order to cease and desist shall have the same force and effect and may be altered, modified or set aside in the same manner and within the same time provided by statute for other orders. The order shall become final upon service. Delivery by the U.S. Postal Service of the complaint and decision containing the agreed-to order to proposed respondent's address as stated in this agreement containing the agreed-to order shall constitute service. Proposed respondent waives any right it may have to any other manner of service. The complaint may be used in construing the terms of the order, and no agreement, understanding, representation or interpretation not contained in the order or the agreement may be used to vary or contradict the terms of the order.

7. Proposed respondent has read the proposed complaint and order contemplated hereby. It understands that once the order has been issued, it may be required to file one or more compliance reports showing that it has fully complied with the order. Proposed respondent further understands that it may be liable for civil penalties in the amount provided by law for each violation of the order after it becomes final.

Order

Definitions

For the purposes of this Order, the following definitions shall apply:

A. ''Distributor'' means any person, other than direct employees of Body Wise, who has sold nutritional supplements on behalf of Body Wise or who has received any compensation in connection with the sale of nutritional supplements on behalf of Body Wise, whether such person is characterized as a consultant, associate, distributor or otherwise.

B. ''Competent and reliable scientific evidence'' means tests, analyses, research, studies or other evidence based on the expertise of professionals in the relevant area, that have been conducted and evaluated in an objective manner by persons qualified to do so, using procedures generally accepted in the profession to yield accurate and reliable results.

I

It is ordered that Body Wise International, Inc., a corporation, its successors and assigns, and its officers, directors, representatives, agents, and employees, directly or through any corporation, subsidiary, division or other device, in connection with the advertising, packaging, labeling, promotion, offering for sale, sale or distribution of nutritional supplements, food or drugs, as ''food'' and ''drug'' are defined in sections 12 and 15 of the Federal Trade Commission Act, 15 U.S.C. 52 and 55, in or affecting commerce, as ''commerce'' is defined in the Federal Trade Commission Act, do forthwith cease and desist from misrepresenting or assisting others in misrepresenting, in any manner, directly or by implication, that the nutritional supplement, food or drug:

a. Can cause, aid, facilitate or contribute to achieving or maintaining weight loss without a reduction in total caloric intake or an increase in exercise; or

b. Contains any ingredient that, individually or in connection with other ingredients, can cause, aid, facilitate or contribute to achieving or maintaining weight loss without a reduction in total caloric intake or an increase in exercise.

II

It is further ordered that Body Wise International, Inc., a corporation, its successors and assigns, and its officers, directors, representatives, agents, and employees, directly or through any

corporation, subsidiary, division or other device, in connection with the advertising, packaging, labeling, promotion, offering for sale, sale or distribution of nutritional supplements, food or drugs, as ''food'' and ''drug'' are defined in sections 12 and 15 of the Federal Trade Commission Act, 15 U.S.C. 52 and 55, in or affecting commerce, as ''commerce'' is defined in the Federal Trade Commission Act, do forthwith cease and desist from representing or assisting others in representing, in any manner, directly or by implication, that the nutritional supplement, food or drug:

a. Can cause, aid, facilitate or contribute to achieving or maintaining weight loss;

b. Contains any ingredient that, individually or in connection with other ingredients, can cause, aid, facilitate or contribute to achieving or maintaining weight loss;

c. Reduces, can reduce or helps reduce serum cholesterol levels;

d. Contains any ingredient that, individually or in connection with other ingredients, reduces, can reduce or helps reduce serum cholesterol levels; or

e. Provides, can provide, or helps provide any other health benefit;

unless, at the time of making any such representation, respondent possesses and relies upon competent and reliable scientific evidence that substantiates the representation.

III

It is further ordered that Body Wise International, Inc., a corporation, its successors and assigns, and its officers, directors, representatives, agents, and employees, directly or through any corporation, subsidiary, division or other device, in connection with the advertising, packaging, labeling, promotion, offering for sale, sale or distribution of nutritional supplements, food or drugs, as ''food'' and ''drug'' are defined in sections 12 and 15 of the Federal Trade Commission Act, 15 U.S.C. 52 and 55, in or affecting commerce, as ''commerce'' is defined in the Federal Trade Commission Act, do forthwith cease and desist from misrepresenting, in any manner, directly or by implication, the existence, contents, validity, results, conclusions, or interpretations of any test or study.

IV

It is further ordered that Body Wise International, Inc., a corporation, its successors and assigns, and its officers, directors, representatives, agents, and employees, directly or through any corporation, subsidiary, division or other device, in connection with the advertising, packaging, labeling, promotion, offering for sale, sale or distribution of nutritional supplements, food or drugs, as ''food'' and ''drug'' are defined in sections 12 and 15 of the Federal Trade Commission Act, 15 U.S.C. 52 and 55, in or affecting commerce, as ''commerce' is defined in the Federal Trade Commission Act, do forthwith cease and desist from representing or assisting others in representing, in any manner, directly or by implication, that any endorsement (as ''endorsement'' is defined in 16 CFR 255.0(b)) of such nutritional supplement, food or drug represents the typical or ordinary experience of members of the public who use the nutritional supplement, food or drug, unless such representation is true and, at the time of making such representation, respondent possesses and relies upon competent and reliable scientific evidence that substantiates such representation.

Provided, however, respondent may use such endorsements if the statements or depictions that comprise the endorsements are true and accurate, and if respondent discloses clearly, prominently, and in close proximity to the endorsement:

a. What the generally expected performance would be in the depicted circumstances; or

b. The limited applicability of the endorser's experience to what consumers may generally expect to achieve; *i.e.*, that consumers should not expect to experience similar results.

It is further ordered that Body Wise International, Inc., a corporation, its successors and assigns, and its officers, directors, representatives, agents, and employees, directly or through any corporation, subsidiary, division or other device, in connection with the advertising, packaging, labeling, promotion, offering for sale, sale or distribution of nutritional supplements, food or drugs, as ''food'' and ''drug'' are defined in sections 12 and 15 of the Federal Trade Commission Act, 15 U.S.C. 52 and 55, in or affecting commerce, as ''commerce'' is defined in the Federal Trade Commission Act, do forthwith cease and desist from failing to disclose, clearly and prominently, a material connection, when one exists, between a person providing an endorsement for any such product, as ''endorsement'' is defined in 16 CFR 255.0(b), and respondent or any other individual or entity manufacturing, labeling, advertising, promoting, offering for sale, selling, or distributing such product. For purposes of this Order, ''material connection'' shall mean any relationship that might materially affect the weight or credibility of the endorsement and would not reasonably be expected by consumers.

VI

It is further ordered that Body Wise International, Inc., a corporation, its successors and assigns, and its officers, directors, representatives, agents, and employees, directly or through any corporation, subsidiary, division or other device, in connection with the advertising, packaging, labeling, promotion, offering for sale, sale or distribution of nutritional supplements, food or drugs, as ''food'' and ''drug'' are defined in sections 12 and 15 of the Federal Trade Commission Act, 15 U.S.C. 52 and 55, in or affecting commerce, as ''commerce'' is defined in the Federal Trade Commission Act, do forthwith cease and desist from disseminating or assisting others in disseminating any advertisement which contains any reference to physicians or other health care professionals unless respondent discloses clearly and conspicuously that physicians and other health care professionals who endorse Body Wise products may be Body Wise distributors and have a financial interest in promoting the sale of Body Wise products.

VII

Nothing in this Order shall prohibit respondent from making any representation that is specifically permitted in labeling for any product by regulations promulgated by the Food and Drug Administration pursuant to the Nutrition Labeling and Education Act of 1990.

VIII

Nothing in this Order shall prohibit respondent from making any representation for any drug that is permitted in labeling for any such drug under any tentative final or final standard promulgated by the Food and Drug Administration, or under any new drug application approved by the Food and Drug Administration.

IX

It is further ordered that respondent shall notify the Commission at least thirty (30) days prior to any proposed change in the corporation, such as dissolution, assignment, sale resulting in the emergence of a successor corporation or association, or the creation or dissolution of subsidiaries or affiliates, or any other change in the corporation that may affect compliance obligations arising under this Order.

X

It is further ordered that for three (3) years following the dissemination of any representation covered by this Order, respondent, or its successors and assigns, shall maintain and upon request make available to the Federal Trade Commission for inspection and copying, copies of:

A. All materials that were relied upon in disseminating such advertisement; and

B. All tests, reports, studies, surveys, demonstrations or other evidence in its possession or control that contradict, qualify, or call into question such representation, including complaints from consumers.

XI

It is further ordered that respondent shall distribute a copy of this Order to each of its operating divisions and to each of its officers, agents, representatives, and employees engaged in the preparation or placement of advertisements or other materials covered by this Order.

XII

It is further ordered that respondent shall distribute a copy of this Order to each of its current distributors; *provided* that respondent may satisfy the requirements of this section with respect to current distributors by publishing the full text of this Order clearly and prominently in any periodical which is published by respondent and which is distributed to all of its distributors.

XIII

It is further ordered that respondent shall, within sixty (60) days after service of this Order, and at such other times as the Commission may require, file with the Commission a report, in writing, setting forth in detail the manner and form in which it has complied with this Order.

Analysis of Proposed Consent Order to Aid Public Comment

The Federal Trade Commission has accepted, subject to final approval, an agreement to a proposed consent order from Body Wise International, Inc. (''Body Wise'' or ''respondent''). The agreement would settle a proposed complaint by the Federal Trade Commission that respondent has engaged in unfair or deceptive acts or practices in violation of section 5(a) of the Federal Trade Commission Act.

The proposed consent order has been placed on the public record for sixty (60) days for reception of comments by interested persons. Comments received during this period will become part of the public record. After sixty (60) days, the Commission will again review the agreement and the comments received and will decide whether it should withdraw from the agreement or make final the agreement's proposed order.

The Proposed Complaint

The administrative complaint which the Commission proposed to issue would charge that respondent markets a number of nutritional supplements, for which it makes deceptive representations concerning their efficacy in promoting weight loss and weight management and in the reduction of serum cholesterol levels. The complaint also charges Body Wise with using testimonials from physicians and consumers, when the experiences described in the testimonials are not typical of the likely experiences of Body Wise customers, and without disclosing that the endorsers have a financial interest in promoting the sale of Body Wise products. Finally, the complaint alleges that Body Wise has encouraged the use of physicians and other health professionals as references without disclosing to consumers that they have a direct financial interest in promoting the sale of Body Wise products.

The definition section of the proposed order defines certain terms used throughout the order.

Section I of the proposed order bars Body Wise from making claims that its nutritional supplements can cause or contribute to achieving or maintaining weight loss without a reduction in caloric intake or an increase in exercise and or that its supplements contain any ingredients that have that effect. Section II of the order bars unsubstantiated weight loss, weight management and cholesterol reduction claims. It also contains fencing-in relief that applies the same substantiation standard to any claims regarding the health benefits of its nutritional supplements. Section III bars Body Wise from misrepresenting tests or studies. Section IV bars Body Wise from using testimonials to represent the typical experience of Body Wise's customers unless it can substantiate that such claims are in fact typical or it clearly discloses that the endorser's experience is not typical. Section V requires the affirmative disclosure of any material connection between Body Wise and any endorser.

Section VI requires Body Wise, in any advertisement that contains any reference to physicians or other health professionals, to disclose that health care professionals who endorse Body Wise products or act as references may be distributors and have a financial interest in promoting the sale of Body Wise products. This section addresses Body Wise's use of physicians as references to support the sales activities of other Body Wise distributors.

Sections VII and VIII harmonize the requirements of the order with the requirements of the Nutrition Labeling and Education Act of 1990 and with Food and Drug Administration procedures. The remaining sections are standard reporting, record-keeping and notice provisions.

The purpose of this analysis is to facilitate public comment on the proposed order, and it is not intended to constitute an official interpretation of the agreement and the proposed order or to modify their terms in any way.

Donald S. Clark,

Secretary.

[FR Doc. 95–16445 Filed 7–3–95; 8:45 am]

BILLING CODE 6750–01–M

[Dkt. C–3578]

Felson Builders, Inc., et al.; Prohibited Trade Practices, and Affirmative Corrective Actions

AGENCY: Federal Trade Commission.

ACTION: Consent order.

SUMMARY: In settlement of alleged violations of federal law prohibiting unfair acts and practices and unfair methods of competition, this consent order requires, among other things, three California firms and an officer to comply with the full disclosure requirements of the Truth in Lending Act and Regulation Z, its implementing regulation, in advertising credit terms, and requires the respondents to make full written disclosure of the true costs and terms of the financing prior to consummation of credit agreements.

DATES: Complaint and Order issued May 15, 1995.[1]

FOR FURTHER INFORMATION CONTACT: Jeffrey Klurfeld, San Francisco Regional Office, Federal Trade Commission, 901 Market St., Suite 570, San Francisco, CA. 94103. (415) 744–7920.

SUPPLEMENTARY INFORMATION: On Tuesday, February 28, 1995, there was published in the **Federal Register**, 60 FR 10861, a proposed consent agreement with analysis In the Matter of Felson Builders, Inc., et al., for the purpose of soliciting public comment. Interested parties were given sixty (60) days in which to submit comments, suggestions

[1] Copies of the Complaint and the Decision and Order are available from the Commission's Public Reference Branch, H–130, 6th Street & Pennsylvania Avenue, N.W., Washington, D.C. 20580.

or objections regarding the proposed form of the order.

No comments having been received, the Commission has ordered the issuance of the complaint in the form contemplated by the agreement, made its jurisdictional findings and entered an order to cease and desist, as set forth in the proposed consent agreement, in disposition of this proceeding.

(Sec. 6, 38 Stat. 721; 15 U.S.C. 46. Interpret or apply sec. 5, 38 Stat. 719, as amended; 82 Stat. 146, 147; 15 U.S.C. 45, 1601, *et seq.;* 12 CFR 226)

Donald S. Clark,

Secretary.

[FR Doc. 95–16449 Filed 7–3–95; 8:45 am]

BILLING CODE 6750–01–M

[File No. 932–3144]

Good News Products, Inc.; Proposed Consent Agreement with Analysis to Aid Public Comment

AGENCY: Federal Trade Commission.

ACTION: Proposed consent agreement.

SUMMARY: In settlement of alleged violations of federal law prohibiting unfair acts and practices and unfair methods of competition, this consent agreement, accepted subject to final Commission approval, would prohibit, among other things, a Hamilton, Michigan company from misrepresenting the nutrient content of eggs or products containing egg yolks, and from making health claims about such products without scientific evidence to substantiate the claims.

DATES: Comments must be received on or before September 5, 1995.

ADDRESSES: Comments should be directed to: FTC/Office of the Secretary, Room 159, 6th St. and Pa. Ave., NW., Washington, DC 20580.

FOR FURTHER INFORMATION CONTACT: Phoebe Morse, Boston Regional Office, Federal Trade Commission, 101 Merrimac Street, Suite 810, Boston, Massachusetts 02114–4719. (617) 424–5960.

SUPPLEMENTARY INFORMATION: Pursuant to section 6(f) of the Federal Trade Commission Act, 38 Stat. 721, 15 U.S.C. 46 and § 2.34 of the Commission's rules of practice (16 CFR 2.34), notice is hereby given that the following consent agreement containing a consent order to cease and desist, having been filed with and accepted, subject to final approval, by the Commission, has been placed on the public record for a period of sixty (60) days. Public comment is invited. Such comments or views will be considered by the Commission and will be available for inspection and copying at its principal office in accordance with § 4.9(b)(6)(ii) of the Commission's rules of practice (16 CFR 4.9(b)(6)(ii)).

Agreement Containing Consent Order To Cease and Desist

The Federal Trade Commission having initiated an investigation of certain acts and practices of Good News Products, Inc., a corporation, and it now appearing that Good News Products, Inc., hereinafter sometimes referred to as proposed respondent, is willing to enter into an agreement containing an order to cease and desist from the use of the acts and practices being investigated,

It is hereby agreed by and between Good News Products, Inc., by its duly authorized officer, and counsel for the Federal Trade Commission that:

1. Proposed respondent Good News Products, Inc. is a corporation organized, existing and doing business under and by virtue of the laws of the State of Michigan with its office and principal place of business located at East Washington & M–40, Hamilton, Michigan 49419.

2. Proposed respondent admits all the jurisdictional facts set forth in the draft complaint.

3. Proposed respondent waives:

(a) Any procedural steps;

(b) The requirement that the Commission's decision contain a statement of findings of fact and conclusions of law;

(c) All rights to seek judicial review or otherwise to challenge or contest the validity of the order entered pursuant to this agreement; and

(d) Any claim under the Equal Access to Justice Act.

4. This agreement shall not become part of the public record of the proceeding unless and until it is accepted by the Commission. If this agreement is accepted by the Commission, it, together with the draft complaint contemplated thereby, will be placed on the public record for a period of sixty (60) days and information in respect thereto publicly released. The Commission thereafter may either withdraw its acceptance of this agreement and so notify the proposed respondent, in which event it will take such action as it may consider appropriate, or issue and serve its complaint (in such form as the circumstances may require) and decision, in disposition of the proceeding.

5. This agreement is for settlement purposes only and does not constitute an admission by proposed respondent of facts, other than jurisdictional facts, or of violations of law as alleged in the draft complaint.

6. The agreement contemplates that , if it is accepted by the Commission, and if such acceptance is not subsequently withdrawn by the Commission pursuant to the provisions of Section 2.34 of the Commission's Rules, the Commission may, without further notice to proposed respondent: (1) Issue its complaint corresponding in form and substance with the draft complaint and its decision containing the following order to cease and desist in disposition of the proceeding; and (2) make information public in respect thereto. When so entered, the order to cease and desist shall have the same force and effect and may be altered, modified or set aside in the same manner and within the same time provided by statute for other orders. The order shall become final upon service. Delivery by the U.S. Postal Service of the complaint and decision containing the agreed-to order to proposed respondent's address as stated in this agreement shall constitute service. Proposed respondent waives any rights it may have to any other manner of service.

The complaint may be used in construing the terms of the order, and no agreement, understanding, representation, or interpretation not contained in the order or the agreement may be used to vary or contradict the terms of the order.

7. Proposed respondent has read the proposed complaint and order contemplated hereby. It understands that once the order has been issued, it will be required to file one or more compliance reports showing that it has fully complied with the order. Proposed respondent further understands that it may be liable for civil penalties in the amount provided by law for each violation of the order after it becomes final.

Order

I.

It is ordered that respondent Good News Products, Inc., a corporation, its successors and assigns, and its officers; and respondent's agents, representatives and employees, directly or through any corporation, subsidiary, division or other device, in connection with the labeling, advertising, promotion, offering for sale, sale, or distribution of eggs or any food containing egg yolk in or affecting commerce, as ''food'' and ''commerce'' are defined in the Federal Trade Commission Act, do forthwith cease and desist from misrepresenting, in any manner, directly or by implication, through numerical or

descriptive terms or any other means, the absolute or comparative amount of total fat, saturated fat or any other nutrient or ingredient in such food.

II.

It is further ordered that respondent Good News Products, Inc., a corporation, its successors and assigns, and its officers; and respondent's agents, representatives and employees, directly or through any corporation, subsidiary, division or other device, in connection with the labeling, advertising, promotion, offering for sale, sale, or distribution of eggs or any food containing egg yolk in or affecting commerce, as ''food'' and ''commerce'' are defined in the Federal Trade Commission Act, do forthwith cease and desist from making any representation, in any manner, directly or by implication:

A. About the absolute or comparative effect on such food on heart disease or heart disease risk factors;

B. About the absolute or comparative effect of such food on serum cholesterol; and

C. About the absolute or comparative health benefits of such food, unless at the time of making such representation, respondent possesses and relies upon competent and reliable scientific evidence substantiating the representation. For purposes of this Order, ''competent and reliable scientific evidence'' shall mean tests, analyses, research, studies or other evidence based on the expertise of professionals in the relevant area, that has been conducted and evaluated in an objective manner by persons qualified to do so, using procedures generally accepted in the profession to yield accurate and reliable results.

III.

Nothing in this Order shall prohibit respondent from making any representation that is specifically permitted in labeling for eggs or any food containing egg yolk by regulations promulgated by the Food and Drug Administration pursuant to the Nutrition Labeling and Education Act of 1900.

IV.

It is further ordered that for five (5) years after the last date of dissemination of any representation covered by this Order, respondent, or its successors and assigns, shall maintain and upon request make available to the Federal Trade Commission for inspection and copying:

A. All materials that were relied upon in disseminating such representation; and

B. All tests, reports, studies, surveys, demonstrations or other evidence in their possession or control that contradict, qualify or call into question such representation, or the basis relied upon for such representation, including complaints from consumers and complaints or inquiries from governmental organizations.

V.

It is further ordered that respondent shall, within thirty (30) days after service upon it of this Order, distribute a copy of the Order to each of the respondent's operating divisions, to each of its licensees, to each of its managerial employees, and to each of its officers, agents, representatives or employees engaged in the preparation or placement of advertising or other materials covered by this Order and shall secure from each such person a signed statement acknowledging receipt of this Order.

VI.

It is further ordered that respondent, or its successors and assigns, shall promptly terminate its licensing agreement with any licensee if respondent has actual knowledge or knowledge fairly implied on the basis of objective circumstances that such licensee is engaging in acts or practices that respondent is prohibited from engaging in under Parts I and II of this Order, unless such licensee immediately ceases engaging in such acts or practices.

VII.

It is further ordered that respondent, its successors and assigns, shall notify the Commission at least thirty (30) days prior to any proposed change in the corporate respondent, including but not limited to dissolution, assignment or sale resulting in the emergence of a successor corporation, the creation or dissolution of subsidiaries or affiliates, or any other corporate change that may affect compliance obligations arising out of this Order.

VIII.

It is further ordered that respondent shall, within sixty (60) days after service of this Order, and at such other items as the Federal Trade Commission may require, file with the Commission a report, in writing, setting forth in detail the manner and form in which it has complied with this Order.

Analysis of Proposed Consent Order To Aid Public Comment

The Federal Trade Commission has accepted an agreement, subject to final approval, to a proposed consent order from respondent Good News Products, Inc. (''Good News Products'').

The proposed consent order has been placed on the public record for sixty (60) days for reception of comments by interested persons. Comments received during this period will become part of the public record. After sixty (60) days, the Commission will again review the agreement and the comments received and will decide whether it should withdraw from the agreement and take other appropriate action or make final the agreement's proposed order.

This matter concerns claims made by Good News Products in its advertising and promotional materials for eggs.

The Commission's complaint alleges that Good News Products engaged in unfair or deceptive practices in connection with the advertising of its eggs. According to the complaint, Good News Product falsely represented that its eggs are significantly lower in both saturated fat and total fat than ordinary eggs.

The complaint also alleges that Good News Products falsely represented that it had a reasonable basis for claims that the omega-3 fatty acids in Good News Eggs will have a positive effect on risk factors for heart disease, such as atherosclerosis, high blood cholesterol levels and high blood pressure, and on rheumatoid arthritis, and that they may decrease blood cholesterol.

Finally, the complaint alleges that Good News Products falsely represented that it had a reasonable basis for its claim that, because Good News Eggs are lower in saturated fat than ordinary eggs, they will increase blood cholesterol levels less than ordinary eggs.

The proposed consent order contains provisions designed to remedy the violations charged and to prevent the respondent from engaging in similar acts and practices in the future. Part I of the proposed order prohibits Good News Products from misrepresenting the absolute or comparative amount of total fat, saturated fat or any other nutrient or ingredient in eggs or any food containing egg yolk.

Part II of the proposed order prohibits respondent from making any claims about the health benefits, including the absolute or comparative effect on heart disease or heart disease risk factors, of eggs or foods containing egg yolk unless, prior to making such claim, Good News Products has competent and reliable

scientific evidence to substantiate the claims.

Part III of the proposed order specifically allows respondent to make any representation permitted in labeling by the Food and Drug Administration for food under the Nutrition Labeling and Education Act of 1990.

Part IV of the proposed order requires Good News Products to maintain copies of all materials relied upon in making any representations covered by the order.

Part V of the proposed order requires respondent to distribute copies of the order to its licensees and to various officers, agents and representatives.

Part VI of the proposed order requires Good News Products to terminate its licensing agreement with any licensee that it has reason to know is engaged in practices that respondent is prohibited from engaging in under parts I and II of the order.

Part VII of the proposed order requires respondent to notify the Commission of any changes in corporate structure that might affect compliance with the order.

Part VIII of the proposed order requires respondent to file with the Commission one or more reports detailing compliance with the order.

The purpose of this analysis is to facilitate public comment on the proposed consent order. It is not intended to constitute an official interpretation of the agreement and proposed order or to modify in any way their terms.

Donald S. Clark,

Secretary.

[FR Doc. 95–16446 Filed 7–3–95; 8:45 am]

BILLING CODE 6750–01–M

[Dkt. C–3582]

Haagen-Dazs Company, Inc.; Prohibited Trade Practices, and Affirmative Corrective Actions

AGENCY: Federal Trade Commission.

ACTION: Consent order.

SUMMARY: In settlement of alleged violations of federal law prohibiting unfair acts and practices and unfair methods of competition, this consent order prohibits, among other things, a New Jersey-based ice cream and frozen yogurt corporation from misrepresenting the existence or amount of fat, saturated fat, cholesterol, or calorie content of any of its frozen food products in the future, and requires the respondent to meet the Food and Drug Administration qualifying amount for any nutrient content claim.

DATES: Complaint and Order issued June 2, 1995.[1]

FOR FURTHER INFORMATION CONTACT: Ann Maher or Michelle Rusk, FTC/S–4002, Washington, D.C. 20580. (202) 326–2987 or 326–3148.

SUPPLEMENTARY INFORMATION: On Friday, December 9, 1994, there was published in the **Federal Register**, 59 FR 63806, a proposed consent agreement with analysis In the Matter of Haagen–Dazs Company, Inc., for the purpose of soliciting public comment. Interested parties were given sixty (60) days in which to submit comments, suggestions or objections regarding the proposed form of the order.

Comments were filed and considered by the Commission. The Commission has ordered the issuance of the complaint in the form contemplated by the agreement, made its jurisdictional findings and entered an order to cease and desist, as set forth in the proposed consent agreement, in disposition of this proceeding.

(Sec. 6, 38 Stat. 721; 15 U.S.C. 46. Interprets or applies sec. 5, 38 Stat. 719, as amended; 15 U.S.C. 45, 52)

Donald S. Clark,

Secretary.

[FR Doc. 95–16450 Filed 7–3–95; 8:45 am]

BILLING CODE 6750–01–M

[File No. 932–3111]

Quantum Electronics Corp., et al.; Proposed Consent Agreement with Analysis to Aid Public Comment

AGENCY: Federal Trade Commission.

ACTION: Proposed Consent Agreement.

SUMMARY: In settlement of alleged violations of federal law prohibiting unfair acts and practices and unfair methods of competition, this consent agreement, accepted subject to final Commission approval, would prohibit, among other things, a Warwick, Rhode Island based company and its principal officers from making unsubstantiated claims about the ability of any air cleaning product to eliminate, remove, clear or clean any indoor air pollutant—or any quantity of indoor air pollutants—from a user's environment.

DATES: Comments must be received on or before September 5, 1995.

ADDRESSES: Comments should be directed to: FTC/Office of the Secretary, Room 159, 6th St. and Pa. Ave., NW., Washington, DC 20580.

FOR FURTHER INFORMATION CONTACT: Jeffrey Klurfeld, Kerry O'Brien, and Linda Badger, San Francisco Regional Office, Federal Trade Commission, 901 Market Street, Suite 570, San Francisco, CA 94103. (415) 744–7920.

SUPPLEMENTARY INFORMATION: Pursuant to section 6(f) of the Federal Trade Commission Act, 38 Stat. 721, 15 U.S.C. 46 and § 2.34 of the Commission's rules of practice (16 CFR 2.34), notice is hereby given that the following consent agreement containing a consent order to cease and desist, having been filed with and accepted, subject to final approval, by the Commission, has been placed on the public record for a period of sixty (60 days. Public comment is invited. Such comments or views will be considered by the Commission and will be available for inspection and copying at its principal office in accordance with § 4.9(b)(6)(ii) of the Commission's rules of practice (16 CFR 4.9(b)(6)(ii)).

The Federal Trade Commission having initiated an investigation of certain acts and practices of Quantum Electronics Corporation, a corporation, Albert O. Coates, Maurice Lepenven, and Jacqueline J. Maynard, individually and as officers of said corporation (''proposed respondents''), and it now appearing that proposed respondents are willing to enter into an agreement containing an order to cease and desist from the use of the acts and practices being investigated,

It is hereby agreed by and between proposed respondents, by their duly authorized officers, and their attorney, and counsel for the Federal Trade Commission that:

1. Proposed respondent Quantum Electronics Corporation is a corporation organized, existing, and doing business under and by virtue of the laws of the State of Rhode Island, with its office and principal place of business located at 110 Jefferson Blvd., in the City of Warwick, State of Rhode Island.

Proposed respondents Albert O. Coates, Maurice Lepenven,and Jacqueline J. Maynard are officers of said corporation. They formulate, direct, and control the policies, acts and practices of said corporation and their address is the same as that of said corporation.

2. Proposed respondents admit all the jurisdictional facts set forth in the draft of complaint.

3. Proposed respondents waive:]

a. Any further procedural steps;

b. The requirement that the Commission's decision contain a statement of findings of fact and conclusions of law; and

c. All rights to seek judicial review or otherwise to challenge or contest the

[1] Copies of the Complaint and the Decision and Order are available from the Commission's Public Reference Branch, H–130, 6th Street & Pennsylvania Avenue, N.W., Washington, D.C. 20580.

validity of the order entered pursuant to this agreement.

4. This agreement shall not become part of the public record of the proceeding unless and until it is accepted by the Commission. If this agreement is accepted by the Commission, it, together with the draft of complaint contemplated thereby, will be placed on the public record for a period of sixty (60) days and information in respect thereto publicly released. The Commission thereafter may either withdraw its acceptance of this agreement and so notify the proposed respondents, in which event it will take such action as it may consider appropriate, or issue and serve its complaint (in such form as the circumstances may require) and decision, in disposition of the proceeding.

5. This agreement is for settlement purposes only and does not constitute an admission by proposed respondents of facts, other than jurisdictional facts, or of violations of law as alleged in the draft complaint.

6. This agreement contemplates that, if it is accepted by the Commission, and if such acceptance is not subsequently withdrawn by the Commission pursuant to the provisions of § 2.34 of the Commission's rules, the Commission may, without further notice to proposed respondents, (a) issue its compliant corresponding in form and substance with the draft of complaint here attached and its decision containing the following order to cease and desist in disposition of the proceeding and (b) make information public in respect thereto. When so entered, the order to cease and desist shall have the same force and effect and may be altered, modified or set aside in the same manner and within the same time provided by statute for other orders. The order shall become final upon service. Delivery by the U.S. Postal Service of the compliant and decision containing the agreed-to order to proposed respondents' address as stated in this agreement shall constitute service. Proposed respondents waive any right they may have to any other manner of service. The complaint may be used in canstruing the terms of the order, and no agreement, understanding, representation, or interpretation not contained in the order or the agreement may be used to vary or contradict the terms of the order.

7. Proposed respondents have read the proposed compliant and order contemplated hereby. They understand that once the order has been issued, they will be required to file one or more compliance reports showing that they have fully complied with the order. Proposed respondents further understand that they may be liable for civil penalties in the amount provided by law for each violation of the order after it becomes final.

Order

For the purposes of this Order, the following definitions shall apply:

A. The term ''air cleaning product'' shall mean any product, equipment, or appliance designed or advertised to remove, treat, or reduce the level of any pollutant(s) in the air.

B. The terms ''indoor air pollutant(s)'' or ''pollutant(s)'' shall mean one or more of the following: Odors, nitrogen dioxide, formaldehyde, sulfur dioxide, ammonia, trichlorethylene, carbon dioxide, hydrogen sulfide, methane, mold, mildew, bacteria, dust, chlorine, fungi, volatile organic compounds, viruses, or any other gaseous or particulate matter found in indoor air.

C. The term ''competent and reliable scientific evidence'' shall mean tests, analyses, research, studies or other evidence based on the expertise of professionals in the relevant area, that has been conducted and evaluated in an objective manner by persons qualified to do so, using procedures generally accepted in the profession to yield accurate and reliable results.

I.

It is ordered that respondents Quantum Electronics Corporation, a corporation, its successors and assigns, and its officers, and Albert O. Coates, Maurice Lepenven, and Jacqueline J. Maynard, individually and as officers of said corporation, and respondents' agents, representatives, and employees, directly or through any corporation, subsidiary, division or other device, in connection with the manufacturing, labelling, advertising, promotion, offering for sale, sale, or distribution of any air cleaning product in or affecting commerce, as ''commerce'' is defined in the Federal Trade Commission Act, do forthwith cease and desist from representing, in any manner, directly or by implication,

A. Such product's ability to eliminate, remove, clear, or clean any indoor air pollutant from a user's environment; or

B. Such product's ability to eliminate, remove, clear, or clean any quantity of indoor air pollutants from a user's environment;

unless, at the time of making such representation, respondents possess and rely upon competent and reliable scientific evidence that substantiates the representation.

II.

It is ordered that respondents Quantum Electronics Corporation, a corporation, its successors and assigns, and its officers, and Albert O. Coates, Maurice Lepenven, and Jacqueline J. Maynard, individually and as officers of said corporation, and respondents' agents, representatives, and employees, directly or through any corporation, subsidiary, division or other device, in connection with the manufacturing, labelling, advertising, promotion, offering for sale, sale, or distribution of any air cleaning product in or affecting commerce, as ''commerce'' is defined in the Federal Trade Commission Act, do forthwith cease and desist from representing, in any manner, directly or by implication, that:

A. The use of ozone is more effective in cleaning or purifying indoor air than other air cleaning methods;

B. The product does not create harmful by-products; or

C. When used as directed, the product prevents or provides relief from allergies, asthma, and viruses;

unless, at the time of making such representation, respondents possess and rely upon competent and reliable scientific evidence that substantiates the representation.

III.

It is further ordered that respondents, Quantum Electronics Corporation, a corporation, its successors and assigns, and its officers, and Albert O. Coates, Maurice Lepenven, and Jacqueline J. Maynard, individually and as officers of said corporation, and respondents' agents, representatives and employees, directly or through any corporation, subsidiary, division or other device, in connection with the manufacturing, labelling, advertising, promotion, offering for sale, sale, or distribution of any air cleaning product in or affecting commerce, as ''commerce'' is defined in the Federal Trade Commission Act, do forthwith cease and desist from representing, in any manner, directly or by implication, the efficacy, performance, or health-related benefit of any such product, unless, at the time of making such representation, respondents possess and rely upon competent and reliable evidence, which when appropriate must be competent and reliable scientific evidence, that substantiates the representation.

IV.

It is further ordered that for five (5) years after the last date of dissemination of any representation covered by this Order, respondents, or their successors

and assigns, shall maintain and upon request make available to the Federal Trade Commission for inspection and copying:

A. All materials that were relied upon in disseminating such representation; and

B. All tests, reports, studies, surveys, demonstrations, or other evidence in their possession or control that contradict, qualify, or call into question such representation, or the basis relied upon for such representation, including complaints from consumers.

V.

It is further ordered that respondents shall notify the Commission at least thirty (30) days prior to any proposed change in the corporate respondent such as dissolution, assignment or sale resulting in the emergence of a successor corporation, the creation or dissolution of subsidiaries, or any other change in the corporation which may affect compliance obligations arising out of this Order.

VI.

It is further ordered that each individual respondent shall, for a period of five (5) years after the date of service of this Order upon him/her, promptly notify the Commission, in writing, of his/her discontinuance of his/her present business or employment and of his/her affiliation with a new business or employment. For each such new affiliation, the notice shall include the name and address of the new business or employment, a statement of the nature of the new business or employment, and a description of respondent's duties and responsibilities in connection with the new business or employment.

VII.

It is further ordered that the corporate respondent shall, within ten (10) days from the date of service of this Order upon it, distribute a copy of this Order to each of its officers, agents, representatives, independent contractors, and employees involved in the preparation and placement of advertisements or promotional materials, or who is in communication with customers or prospective customers, or who has any responsibilities with respect to the subject matter of this Order; and for a period of three (3) years, from the date of issuance of this Order, distribute a copy of this Order to all of respondent's future such officers, agents, representatives, independent contractors, and employees.

VIII.

It is further ordered that the corporate respondent shall, within ten (10) days from the date of service of this Order upon it, deliver by first class mail or in person a copy of this Order to each of its present distributors or retailers of its ozone generators.

IX.

It is further ordered that respondents shall, within sixty (60) days from the date of service of this Order upon them, and at such other times as the Commission may require, file with the Commission a report, in writing, setting forth in detail the manner and form in which they have complied with this Order.

Analysis of Proposed Consent Order To Aid Public Comment

The Federal Trade Commission has accepted an agreement, subject to final approval, to a proposed consent order from respondents Quantum Electronics Corporation, a Rhode Island corporation, and Albert O. Coates, Maurice Lepenven, and Jacqueline J. Maynard, individually and as officers of the corporation.

The proposed consent order has been placed on the public record for sixty (60) days for reception of comments by interested persons. Comments received during this period will become part of the public record. After sixty (60) days, the Commission will again review the agreement and the comments received and will decide whether it should withdraw from the agreement and take other appropriate action or make final the agreement's proposed order.

This matter concerns the advertising of ozone generators, including the ''Panda 200,'' as air cleaning products for use in homes, offices, other commercial establishments, and boats. The Commission's complaint charges that respondents' advertising contained unsubstantiated representations concerning the efficacy of their ozone generators in cleaning the air.

Sepcifically, the complaint alleges that the respondents lacked substantiation for their claims that: (1) When used as directed, the Panda 200 eliminates, removes, clears, or cleans formaldehyde, sulfur dioxide, ammonia, trichlorethylene, carbon dioxide, hydrogen sulfide, methane, odors, nitrogen dioxide, mold, mildew, bacteria, dust, chlorine, fungi, volatile organic compounds, viruses, and noxious or toxic gasses from a user's environment; (2) the use of ozone is more effective in cleaning or purifying indoor air than air cleaning products that use filters; (3) the Panda 200 does not create harmful by products; and (4) when used as directed, the Panda 200 prevents or provides relief from allergies, asthma, and viruses.

The proposed consent order contains provisions designed to remedy the violations charged and to prevent the respondents from engaging in similar acts and practices in the future.

Part I of the proposed order prohibits respondents from representing any air cleaning product's ability to eliminate, remove, clear, or clean any indoor air pollutant or any quantity of indoor air pollutants from a user's environment, unless respondents possess competent and reliable scientific evidence that substantiates the representation.

Similarly, Part II of the proposed order prohibits respondents from claiming that (1) the use of ozone is more effective in cleaning or purifying indoor air than other air cleaning methods, (2) any air cleaning product does not create harmful by-products, or (3) when used as directed, any air cleaning product prevents or provides relief from allergies, asthma, and viruses, unless respondents possess competent and reliable scientific evidence that substantiates the representation.

As fencing-in relief, Part III of the proposed order provides that if respondents represent the efficacy, performance, or health-related benefit of any air cleaning product, respondents must possess competent and reliable evidence that substantiates the representation.

The proposed order also requires respondents to maintain materials relied upon to substantiate claims covered by the order; to notify the Commission of any change in the corporate structure that might affect compliance with the order; to notify the Commission of certain changes in the business or employment of the named individual respondents; to provide a copy of the consent agreement to their employees involved in the preparation and placement of respondents' advertisements, or in communication with respondents' customers or prospective customers; to distribute a copy of the order to their present distributors or retailers of their ozone generators; and to file one or more reports detailing compliance with the order.

The purpose of this analysis is to facilitate public comment on the proposed order. It is not intended to constitute an official interpretation of

the agreement and proposed order or to modify in any way their terms.

Donald S. Clark,

Secretary.

[FR Doc. 95–16447 Filed 7–3–95; 8:45 am]

BILLING CODE 6750–01–M

[Dkt. C–3579]

Service Corporation International; Prohibited Trade Practices, and Affirmative Actions

AGENCY: Federal Trade Commission.

ACTION: Consent order.

SUMMARY: In settlement of alleged violations of federal law prohibiting unfair acts and practices and unfair methods of competition—in connection with Service Corporation International's acquisition of Uniservice Corporation—this consent order requires, among other things, the Texas corporation to divest, to a Commission-approved acquirer, the Uniservice Corporation assets and businesses in Medford, Oregon, within twelve months or transfer responsibility for the divestiture to a trustee appointed by the Commission, and to obtain prior Commission approval, for a period of ten years, before acquiring any interest in funeral establishments or cemeteries in Jackson County, Oregon.

DATES: Complaint and Order issued May 16, 1995.[1]

FOR FURTHER INFORMATION CONTACT:

K. Shane Woods or Charles A. Harwood, FTC/Seattle Regional Office, 2806 Federal Bldg., 915 Second Ave., Seattle, WA 98174 (206) 220–6350.

SUPPLEMENTARY INFORMATION: On Thursday, March 9, 1995, there was published in the **Federal Register**, 60 FR 12955, a proposed consent agreement with analysis In the Matter of Service Corporation International, for the purpose of soliciting public comment. Interested parties were given sixty (60) days in which to submit comments, suggestions or objections regarding the proposed form of the order.

No comments having been received, the Commission has ordered the issuance of the complaint in the form contemplated by the agreement, made its jurisdictional findings and entered an order divest, as set forth in the proposed consent agreement, in disposition of this proceeding.

[1] Copies of the Complaint and the Decision and Order are available from the Commission's Public Reference Branch, H–130, 6th Street & Pennsylvania Avenue, N.W., Washington, D.C. 20580.

(Sec. 6, 38 Stat. 721; 15 U.S.C. 46. Interpret or apply sec. 5, 38 Stat. 719, as amended; sec. 7, 38 Stat. 731, as amended; 15 U.S.C. 45, 18)

Donald S. Clark,

Secretary.

[FR Doc. 95–16451 Filed 7–3–95; 8:45 am]

BILLING CODE 6750–01–M

[Dkt. C–3584]

Schwegmann Giant Super Markets, Inc.; Prohibited Trade Practices, and Affirmative Corrective Actions

AGENCY: Federal Trade Commission.

ACTION: Consent order.

SUMMARY: In settlement of alleged violations of federal law prohibiting unfair acts and practices and unfair methods of competition—in connection with Schwegmann's proposed acquisition of supermarkets owned by National Holdings, Inc.—this consent order requires among other things, the Louisiana-based corporation to divest, within twelve months, seven stores in the New Orleans area to Commission-approved purchasers, and requires the respondent, for ten years, to obtain Commission approval before acquiring an interest in a supermarket, or another entity that operates a supermarket, in the relevant area.

DATES: Complaint and Order issued June 2, 1995.[1]

FOR FURTHER INFORMATION CONTACT:

Ronald Rowe, FTC/S–2105, Washington, D.C. 20580. (202) 326–2610.

SUPPLEMENTARY INFORMATION: On Wednesday, March 15, 1995, there was published in the **Federal Register**, 60 FR 13993, a proposed consent agreement with analysis In the Matter of Schwegmann Giant Super Markets, Inc., for the purpose of soliciting public comment. Interested parties were given sixty (60) days in which to submit comments, suggestions or objections regarding the proposed form of the order.

No comments having been received, the Commission has ordered the issuance of the complaint in the form contemplated by the agreement, made its jurisdictional findings and entered an order to divest, as set forth in the proposed consent agreement, in disposition of this proceeding.

[1] Copies of the Complaint and the Decision and Order are available from the Commission's Public Reference Branch, H–130, 6th Street & Pennsylvania Avenue NW., Washington, D.C. 20580.

(Sec. 6, 38 Stat. 721; 15 U.S.C. 46. Interpret or apply sec. 5, 38 Stat. 719, as amended; sec. 7, 38 Stat. 731, as amended; 15 U.S.C. 45, 18)

Donald S. Clark,

Secretary.

[FR Doc. 95–16452 Filed 7–3–95; 8:45 am]

BILLING CODE 6750–01–M

[File No. 951–0064]

Silicon Graphics, Inc.; Proposed Consent Agreement With Analysis To Aid Public Comment

AGENCY: Federal Trade Commission.

ACTION: Proposed consent agreement.

SUMMARY: In settlement of alleged violations of federal law prohibiting unfair acts and practices and unfair methods of competition, this consent agreement, accepted subject to final Commission approval, would require, among other things, a Mountain View, California company to take steps to ensure that companies other than the two it is acquiring can develop and sell entertainment graphics software and the workstations to run it to produce sophisticated computer-based graphics for the entertainment industry.

DATES: Comments must be received on or before September 5, 1995.

ADDRESSES: Comments should be directed to: FTC/Office of the Secretary, Room 159, 6th Street and Pennsylvania Avenue NW., Washington, DC 20580.

FOR FURTHER INFORMATION CONTACT: Mary Lou Steptoe, FTC/H–374, Washington, DC 20580. (202) 326–2584 or Howard Morse, FTC/S–3627, Washington, DC 20580. (202) 326–6320.

SUPPLEMENTARY INFORMATION: Pursuant to section 6(f) of the Federal Trade Commission Act, 38 Stat. 721, 15 U.S.C. 46 and § 2.34 of the Commission's rules of practice (16 CFR 2.34), notice is hereby given that the following consent agreement containing a consent order to cease and desist, having been filed with and accepted, subject to final approval, by the Commission, has been placed on the public record for a period of sixty (60) days. Public comment is invited. Such comments or views will be considered by the Commission and will be available for inspection and copying at its principal office in accordance with § 4.9(b)(6)(ii) of the Commission's rules of practice (16 CFR 4.9(b)(6)(ii)).

Agreement Containing Consent Order

The Federal Trade Commission (''Commission'') having initiated an investigation of the proposed acquisition by Silicon Graphics, Inc. (''SGI'') of the stock of Alias Research Inc. (''Alias''), and the stock of

Wavefront Technologies, Inc. (''Wavefront''), and it now appearing that SGI is willing to enter into an Agreement Containing Consent Order (''Agreement'') to port certain computer software to a computer system other than that of SGI, to establish and maintain an open architecture for SGI computers, and to provide for other relief,

It is hereby agreed by and between SGI, by its duly authorized officers and its attorneys, and counsel for the Commission that:

1. Proposed respondent SGI is a corporation organized, existing, and doing business under and by virtue of the laws of the State of Delaware, with its office and principal place of business located at 2011 North Shoreline Boulevard, Mountain View, California, 94043.

2. SGI admits all the jurisdictional facts set forth in the draft of Complaint.

3. SGI waives:

(a) Any further procedural steps;

(b) The requirement that the Commission's decision contain a statement of findings of fact and conclusions of law;

(c) All rights to seek judicial review or otherwise to challenge or contest the validity of the Order entered pursuant to this Agreement; and

(d) Any claim under the Equal Access to Justice Act.

4. This Agreement shall not become part of the public record of the proceeding unless and until it is accepted by the Commission. If this Agreement is accepted by the Commission it, together with the draft of Complaint contemplated thereby, will be placed on the public record for a period of sixty (60) days and information in respect thereto publicly released. The Commission thereafter may either withdraw its acceptance of this Agreement and so notify SGI, in which event it will take such action as it may consider appropriate, or issue and serve its Complaint (in such form as the circumstances may require) and decision in dispositon of the proceeding.

5. This Agreement is for settlement purposes only and does not constitute an admission by SGI that the law has been violated as alleged in the draft of Complaint, or that the facts as alleged in the draft Complaint, other than jurisdictional facts, are true.

6. This Agreement contemplates that, if it is accepted by the Commission, and if such acceptance is not subsequently withdrawn by the Commission pursuant to the provisions of § 2.34 of the Commission's rules, the Commission may, without further notice to SGI, (1) issue its Complaint corresponding in form and substance with the draft of Complaint and its decision containing the following Order in disposition of the proceeding, and (2) make information public with respect thereto. When so entered, the Order shall have the same force and effect and may be altered, modified, or set aside in the same manner and within the same time provided by statute for other orders. The Order shall become final upon service. Delivery by the United States Postal Service of the complaint and decision containing the agreed-to Order to SGI's address as stated in this Agreement shall constitute service. SGI waives any right it may have to any other manner of service. The Complaint may be used in construing the terms of the Order, and no agreement, understanding, representation, or interpretation not contained in the Order or the Agreement may be used to vary or contradict the terms of the Order.

7. SGI has read the proposed Complaint and Order contemplated hereby. It understands that once the Order has been issued, it will be required to file one or more compliance reports showing it has fully complied with the Order. SGI further understands that it may be liable for civil penalties in the amount provided by law for each violation of the Order after it becomes final.

Order

I

It is ordered That, as used in this Order, the following definitions shall apply:

A. ''SGI'' means Silicon Graphics, Inc., its directors, officers, employees, agents and representatives, predecessors, successors and assigns; its subsidiaries, divisions, groups and affiliates controlled by SGI; and the respective directors, officers, employees, agents, representatives, successors and assigns of each.

B. ''Alias'' means Alias Research Inc.

C. ''Wavefront'' means Wavefront Technologies, Inc.

D. ''Respondent'' means SGI.

E. ''Entertainment Products'' means the computer software ALIAS Animator™ and ALIAS PowerAnimator™ products sold as of May 1, 1995, including Additional Fonts and the Advanced Options for ALIAS PowerAnimator™, and any successor products or future versions or general releases of such products, including any additions, modifications, updates, and enhancements thereto released during such period as specified in the Porting Agreement.

F. ''Entertainment Software'' means modelling, animation, rendering, compositing and painting software, as individual software programs or in combination, used in the production of two-dimensational or three-dimensional images for film, video, electronic games, interactive programming, or other entertainment or educational uses, that compete with Entertainment Products or with any component thereof.

G. ''Porting Agreement'' means an agreement between Respondent and a Platform Partner, entered in good fatih, to work together to port the Entertainment Products to be compatible with the Platform Partner's computer systems in their supported configurations and with associated peripherals, which agreement shall provide, among other things, that Respondent shall use reasonable best efforts to optimize the operation of the Entertainment Products in the context of the Platform Partner's computer systems; and which Agreement shall provide that the porting shall occur as soon as reasonably practicable after the Porting Agreement is entered and receives the approval of the Commission; and which agreement shall state the method in which the ported Entertainment Products shall be sold and marketed on terms competitive with those applicable to Entertainment Products compatible with Respondent's computers; and which agreement shall provide for protection from disclosure or improper use of Non-public Information.

H. ''ISV Programs'' means programs and other arrangements that Respondent makes avilable generally to independent software developers that facilitate the development of software compatible with Respondent's computers and operating systems.

I. ''Platform Partner'' means a company with which Respondent has entered into a Porting Agreement pursuant to this Order.

J. ''Non-public Information'' means any information not in the public domain furnished by the Platform Partner to Respondent in its capacity as porter of the Entertainment Products, and (1) if written information, designated in writing by the Platform Partner as proprietary information by an appropriate legend, marking, stamp, or positive written identification on the face thereof, or (2) if oral, visual or other information, identified as proprietary information in writing by the Platform Partner prior to the disclosure or within thirty (30) days after such disclosure. Non-public Information shall not include: (1) Information already known to Respondent, (2) information which is

within the public domain through no violation of this order by Respondent, or (3) information which is known to Respondent from a person other than the Platform Partner not in breach of a confidential disclosure agreement.

K. ''Acquisitions'' means the acquisitions of Alias and Wavefront by SGI.

L. ''Commission'' means the Federal Trade Commission.

II

It is further ordered That,

A. Not later than March 31, 1996, Respondent shall enter into a Porting Agreement that receives the prior approval of the Commission. After such Commission approval, Respondent shall port the Entertainment Products to the Platform Partner's computer systems as provided in the Porting Agreement.

B. Respondent shall enter into such Porting Agreement either with Digital Equipment Corporation, Hewlett-Packard Corporation, IBM Corporation, or Sun Microsystems, Inc., or with another company that receives the prior approval of the Commission. Provided however, nothing in this Order shall prohibit Respondent from entering into additional porting agreements with one or more platform partners without the prior approval of the Commission.

C. The purpose of the Porting Agreement and the porting of the Entertainment Products, pursuant to the Porting Agreement, is to ensure that ported Entertainment Products compatible with the Platform Partner's computer system will be marketed and sold in competition with the Entertainment Products operating on Respondent's computer systems, and to remedy the lessening of competition resulting from the proposed Acquisitions as alleged in the Commission's complaint.

III

It is further ordered That, absent the prior written consent of the proprietor of Non-public Information or unless expressly permitted by any Porting Agreement, (1) Respondent shall use any Non-public Information only in porting the Entertain Products pursuant to such porting agreement, and (2) any persons involved in porting the Entertainment Products shall not provide, disclose, or otherwise make available any Non-public Information to other employees of Respondent.

IV

It is further ordered That Respondent shall:

A. Establish and maintain an open architecture, and publish the Application Program Interfaces (''APIs''), for Respondent's computers and operating systems in such manner that software developers and producers may develop and sell Entertainment Software, for use on Respondent's computers, in competition with Entertainment Software offered by Respondent; and

B. Respondent shall extend to developers of Entertainment Software the right to participate in ISV Programs on terms no less favorable to such developers than those terms applicable to developers of other software for use on Respondent's computers and operating systems.

C. The purpose of this Paragraph IV is to allow Entertainment Software developers and producers to develop and sell Entertainment Software for use on Respondent's computers and operating systems in competition with Respondent, and to remedy the lessening of competition resulting from the proposed Acquisitions as alleged in the Commission's compliant.

V

It is further ordered That, within sixty (60) days after the date this order becomes final and every sixty (60) days thereafter until Respondent has fully complied with the provisions of Paragraph II of this order, Respondent shall submit to the Commission a verified written report setting forth in detail the manner and form in which it intends to comply, is complying, or has complied with those provisions. Respondent shall include in its compliance reports, among other things that are required from time to time, a full description of the efforts being made to comply with Paragraph II of this order.

VI

It is further ordered That, one year from the date this Order becomes final, annually thereafter for the next four (4) years, and at other times as the Commission may require, Respondent shall file with the Commission verified written reports setting forth in detail the manner and form in which it has complied and is complying with Paragraphs II, III and IV of this order.

VII

It is further ordered That, for the purposes of determining or securing compliance with this order, and subject to any legally recognized privilege, upon written request and on reasonable notice to Respondent, Respondent shall permit any duly authorized representatives of the Commission:

A. Access, during office hours and in the presence of counsel, to inspect and copy all books, ledgers, accounts, correspondence, memoranda and other records and documents in the possession or under the control of Respondent relating to any matters contained in this order; and

B. Upon five (5) days notice to Respondent, and without restraint or interference from Respondent, to interview officers or employees of Respondent, who may have counsel present, regarding such matters.

VIII

It is further ordered That Respondent shall notify the Commission at least thirty (30) days prior to any proposed change in Respondent, such as dissolution, assignment, sale resulting in the emergence of a successor, or the creation or dissolution of subsidiaries or any other change that may affect compliance obligations arising out of this Order.

IX

It is further ordered That this Order shall expire five (5) years from the date it becomes final.

Analysis to Aid Public Comment on the Provisionally Accepted Consent Order

The Federal Trade Commission (''the Commission'') has accepted, for public comment, an agreement containing a proposed Consent Order from Silicon Graphics, Inc. (''SGI''). The proposed Consent Order has been placed on the public record for sixty (60) days for reception of comments from interested persons. Comments received during this period will become part of the public record. After sixty (60) days, the Commission will again review the agreement and the comments received and will decide whether it should withdraw from the agreement or make final the agreement's proposed Order.

The Commission's investigation of this matter concerns the proposed acquisitions of Alias Research Inc. (''Alias'') and Wavefront Technology, Inc. (''Wavefront'') by SGI. The Commission's proposed complaint alleges that Alias and Wavefront are two of the top three developers of Unix-based, entertainment graphics and animation software (''entertainment graphics software'') in the world. Entertainment graphics software consists of compatible modelling, animation, rendering, compositing and painting software tools for use on entertainment graphics workstations in the production of high-resolution, 2D and 3D digital images for film, video, electronic games, interactive

programming, or other entertainment or educational, graphic media. Entertainment graphics workstations are computer workstations compatible with entertainment graphics software.

The Complaint alleges that the entertainment graphics workstation and software markets are extremely concentrated with SGI the dominant provider of entertainment graphics workstations, with over 90% of the market. According to the complaint, although various other companies manufacture workstations, most entertainment graphics software was developed for use on SGI workstations and is available only for SGI workstations. The complaint further states that alias and Wavefront compete principally with SoftImage Inc., a subsidiary of Microsoft Corp, and that other developers and producers of entertainment graphics software produce particular software tools that are used as complements rather than substitutes for the product suites offered by Alias, Wavefront and SoftImage, or produce software suites that have found limited customer acceptance relative to the entertainment graphics software offered by Alias, Wavefront and Soft Image.

The complaint further alleges that Alias, Wavefront, and SoftImage are the industry standards, and the ability to run Alias, Wavefront, or SoftImage entertainment graphics software is critical for any computer workstation manufacturer to compete successfully in the entertainment graphics workstation market. According to the complaint, before the proposed acquisitions, Alias negotiated with manufacturers of workstations, other than SGI, to port its entertainment graphics software products to those manufacturers' workstation platforms. The complaint alleges that the effect of such agreements, if consummated, would be to enable such workstation manufacturers to compete in the entertainment graphics workstation market. Also, according to the complaint, before the proposed acquisitions, SGI maintained an open software interface for its entertainment graphics workstations, sponsored independent software developer programs and shared with developers of entertainment graphics software advance information concerning new SGI products to facilitate and promote competitive development of entertainment graphics software.

The Commission complaint also alleges that the acquisition would have anticampetitive effects an would violate Section 7 of the Clayton Act and section 5 of the Federal Trade Commission Act. The Commission alleges further that anticompetitive effects of the acquisitions may include, among other things, a foreclosure of workstation producers other than SGI from significant, independent sources of entertainment graphics software; SGI gaining proprietary, competitively sensitive information pertaining to other workstation producers if such workstation producers are able to get Alias or Wavefront entertainment graphics software ported to their workstations; a foreclosure of, or an increase in costs to, competitors to Alias and Wavefront in the entertainment graphics software market in developing software for use in connection with future entertainment graphics workstation products developed by SGI; and causing consumers to pay higher prices for, or reducing innovation competition among producers of, entertainment graphics software and workstations.

The agreement containing consent order would, if finally accepted by the Commission, settle charges that the acquisition may substantially lessen competition in the entertainment graphics software and hardware markets.

The order, accepted for public comment, contains provisions requiring SGI to enter into a Commission-approved porting agreement, by March 31, 1996, with Digital Equipment Corp., Hewlett-Packard Corp., IBM Corp. or Sun Microsystems, Inc., or another Commission-approved platform partner, and port Alias's two major entertainment graphics software programs, Animator™ and PowerAnimator™, and their successor programs. The porting agreement, to be approved by the Commission, will be an independent contract between SGI/Alias and a platform partner. The order requires, however, that the porting agreement contain provisions requiring SGI to exercise reasonable best efforts to optimize the operation of the entertainment graphics software in the context of the platform partner's computer systems; requiring SGI to port the entertainment graphics software as soon as reasonably practicable after the porting agreement is entered and receives the approval of the Commission; and stating the method in which the ported entertainment graphics software shall be sold and marketed on terms competitive with those applicable to entertainment graphics software compatible with SGI's computers. The order requires an information firewall, specifically prohibiting the exchange of non-public information between the platform partner porting the Alias software and those SGI/Alias employees not participating in the porting procedures. The purpose of the porting agreement and the porting of Alias software is to remedy the lessening of competition resulting from the acquisitions as alleged in the Commission's complaint.

The order also requires SGI to maintain an open architecture and publish its application programming interfaces. Additionally, pursuant to the order, SGI is required to refrain from discriminating against those software companies, other than Alias and Wavefront, that develop software for the SGI platform by continuing to maintain a software development program with no less favorable terms than those development programs SGI maintains for software developers who develop software for applications other than for entertainment graphics. The purpose of the open architecture and non-discrimination provisions is to allow entertainment graphics software developers and producers to develop and sell entertainment graphics software for use on SGI's computers and operating systems in competition with SGI, and to remedy the lessening of competition resulting from the acquisitions as alleged in the Commission's complaint.

The purpose of this analysis is to facilitate public comment on the proposed order, and it is not intended to constitute an official interpretation of the agreement and proposed order or to modify in any way their terms.

Donald S. Clark,

Secretary.

Dissenting Statement of Commissioner Mary L. Azcuenaga in Silicon Graphics, Inc., File 951–0064

The proposed complaint in this matter alleges that the two companies that Silicon Graphics proposes to acquire, Alias and Wavefront, are two of the three leading developers and sellers of entertainment graphics software in a highly concentrated market in which entry is difficult and time consuming.[1] The Commission alleges, and I agree, that the elimination of competition between Alias and Wavefront will substantially lessen competition in violation of section 7 of the Clayton Act.[2] The evidence persuades me that the Commission has a strong case under section 7 based on this horizontal combination, and the obvious course of action would be to challenge the acquisitions on this basis. Such a challenge, if successful, would leave

[1] Complaint paragraphs 10, 11, and 15.

[2] Complaint paragraph 16e.

either Alias or Wavefront free to contract to produce entertainment graphics software for other hardware manufacturers.

Instead, the Commission chooses to rely on vertical foreclosure theory to impose requirements that fail to preserve existing competition and that ultimately may create inefficiency and reduce competition. To the extent that any vertical problems should concern us, they would be resolved by stopping the horizontal transaction. The proposed decision and order having failed to achieve straightforward relief for the real competitive problem, the combination of Alias and Waterfront, I dissent.

Dissenting Statement of Commissioner Roscoe B. Starek, III in the Matter of Silicon Graphics, Inc. (Alias Research, Inc., and Wavefront Technologies, Inc.)

File No. 951–0064

I respectfully dissent from the Commission's decision to initiate this proceeding against Silicon Graphics, Inc. (''SGI''). The proposed complaint alleges anticompetitive effects arising from the vertical integration of the leading manufacturer of entertainment graphics workstations, SGI, with two leading suppliers of entertainment graphics software, Alias Research, Inc., and Wavefront Technologies, Inc.[1] I am not persuaded that these vertical acquisitions are likely ''substantially to lessen competition'' in violation of section 7 of the Clayton Act, 15 U.S.C. 18. Moreover, even if one assumes the validity of the theories of anticompetitive effects, the proposed order does not appear to prevent the alleged effects and may create inefficiency.

The Commission alleges, inter alia, that the acquisitions will reduce competition through two types of foreclosure: (i) Nonintegrated software vendors will be excluded from the SGI platform; and (ii) rival hardware manufacturers will be denied access to Alias and Wavefront software, without which they cannot effectively compete against SGI.[2] Vertical foreclosure theories generally provide a weak basis for Section 7 enforcement;[3] and this double foreclosure scenario has particular problems, both logical and factual.

In general, the two types of foreclosure tend toward mutual exclusion. The very possibility of excluding independent software producers from the SGI-platform suggests the means by which competing workstation producers will avoid foreclosure. The nonintegrated software producers surely have incentives to supply the ''foreclosed'' workstation producers, and each workstation producer has incentives to induce nonintegrated software suppliers to write for its platform. Otherwise, ''we are left to imagine eager suppliers and hungry customers, unable to find each other, forever foreclosed and left to languish.''[4] This predicament is improbable in the dynamic markets at issue.

The acquisition appears very unlikely to give rise to significant, anticompetitive foreclosure of nonintegrated software producers. The proposed complaint's own description of the premerger state of competition tends to exclude this possibility. The complaint alleges that software producers other than Alias, Wavefront, and Microsoft's SoftImage are either competitively insignificant or complementary, and that there is virtually no likelihood of entry by producers of substitutable SGI-compatible software owing to the entrenched positions of Alias and Wavefront. If both propositions are true, then the merger cannot appreciably foreclose software entry or expansion. One cannot find both that the premerger supply elasticity of substitutable software is virtually zero and that the merger would result in the substantial post-merger foreclosure of software producers. In addition, SGI has strong incentives to induce expanded supply of SGI-compatible software: increasing the supply of compatible software (or of any complementary product) increases the demand for SGI's workstations.

It is perhaps more plausible that the transaction could result in reduced supplies of software, or higher costs of obtaining software, for SGI's workstation rivals. Even so, this would be primarily a consequence of the horizontal aspects of the transaction—i.e., the combining of two of the three principal vendors of the relevant software—rather than the vertical aspects. The Commission eschews an enforcement action based on a horizontal theory, however, because of its cost in foregone efficiencies. If the horizontal software combination is efficiency-enhancing, the net anticompetitive impact of these transactions comes from SGI's vertical integration with Alias and Wavefront. If this is so, why not seek injunctive relief against the vertical integration, and avoid the costs of the ineffective regulatory remedy presented in the proposed order?

There are at least two reasons for rejecting this course of action. The first is that there are demonstrable efficiencies associated with exclusive arrangements between hardware and software vendors;[5] the second is that the merger's anticompetitive effects are commensurately difficult to establish. More generally, in order to establish SGI's preeminence among producers of entertainment graphics workstations, the complaint alleges that entry into such hardware is extremely unlikely because of the substantial costs of porting SGI-specific software (especially the ''high end'' variants) to non-SGI platforms. This undermines the contention that the merger would induce a substantial lessening of competition in the entertainment graphics workstation market.[6]

[1] The Commission apparently finds that the horizontal combination of Alias and Wavefront is not anticompetitive on net: the order addresses alleged vertical problems only.

[2] Precedent for this ''double foreclosure'' analysis lies uncomfortably in A.G. Spalding & Bros., Inc., 56 F.T.C. 1125 (1960), in which the Commission rejected Spalding's acquisition of Rawlings Manufacturing Co. Before the acquisition, Spalding did not manufacture baseball gloves, but instead purchased them for resale; Rawlings manufactured baseball gloves and sold them to other resellers. The Commission found that, ''by acquiring Rawlings, Spalding can not only prevent competitors from purchasing (gloves) from Rawlings but can also foreclose manufacturers of (gloves) from access to Spalding as a purchaser thereof.'' 56 F.T.C. at 2269.

[3] For a description of criticisms of pre- and post-Chicago theories of foreclosure, see David Reiffen and Michael Vita, *Is there New Thinking on Vertical Mergers?* A comment, 63 ANTITRUST L.J. _____ (1995). See also Roscoe B. Starek, III, ''Reinventing Antitrust Enforcement? Antitrust at the FTC in 1995 and Beyond,'' Remarks at ''A New Age of Antitrust Enforcement: Antitrust in 1995,'' Marina Del Rey, CA, Feb. 24, 1995.

[4] Robert Bork, THE ANTITRUST PARADOX 232 (1978). Referring to A.G. Spalding, Bork concludes that ''the Commission could cure (this problem) by throwing an industry social mixer.''

[5] A software producer's premerger exclusive commitment to SGI suggests an efficiency rationale for its subsequent integration with SGI: to avoid the expropriation by SGI of the software producer's SGI-specific assets. This is a well established procompetitive rationale for vertical mergers. See, e.g., Benjamin Klein, Robert G. Crawford, and Armen A. Alchian, Vertical Integration, Appropriable Rents, and the Competitive Contracting Process, 21 J.L. & ECON. 297 (1978); Kirk Monteverde and David J. Teece, Supplier Switching Costs and Vertical Integration in the Automobile Industry, 13 BELL J. ECON. 206 (1982a); Kirk Monteverde and David J. Teece, Appropriable Rents and Quasi-Vertical Integration, 25 J.L. & ECON. 321 (1982); Benjamin Klein, Vertical Integration as Organizational Ownership: The Fisher Body-General Motors Relationship Revisited, 4 J.L., ECON. & ORG. 199 (1988).

[6] All of the preceding assumes, arguendo, defining the relevant markets that are most favorable to the Commission's theory of competitive harm from vertical integration. Whether these narrowly defined markets are appropriate is questionable. For example, to the extent that PCs are becoming closer substitutes for entertainment graphics workstations, it is increasingly unlikely that a prerequisite for anticompetitive effects from

Overall, I am unpersuaded that this transaction diminishes competition in any relevant market.[7] Even had I concluded otherwise, however, I would not endorse the proposed consent, the terms of which would require (1) SGI to port its software to a workstation competitor and (2) SGI to maintain an open architecture and to provide access to software developers on nondiscriminatory terms. The problems with remedies of this sort are significant.[8] First, requiring a firm to sell an input to a rival is an ineffective remedy unless the Commission also regulates terms of the sale. Otherwise, the seller simply raises price and/or diminishes quality to the point where profitable entry is precluded. The Commission could seek an order that confers such regulatory power (the current order does not); however, the burden associated with enforcing such an order—the Commission would be required to determine the ''competitive price'' and ''competitive quality'' for such porting rights—cannot be overestimated. For this reason, the Commission historically has shied away from such remedies.

Second, requiring SGI to port entertainment graphics software to third parties will likely create substantial inefficiencies. The evidence clearly suggests that there are efficiencies associated with exclusive arrangements between software and hardware vendors; such arrangements existed well before the current transaction was proposed. Preventing SGI from availing itself of those efficiencies will not benefit consumers.

[FR Doc. 95–16453 Filed 7–3–95; 8:45 am]

BILLING CODE 6750–01–M

Senior Executive Service: Performance Review Board

AGENCY: Federal Trade Commission.

ACTION: Notice.

SUMMARY: Notice is hereby given of the names of the standing Performance Review Board Roster.

DATES: July 5, 1995.

FOR FURTHER INFORMATION CONTACT: Elliott H. Davis, Director of Personnel, Federal Trade Commission (FTC), 6th & Pennsylvania Avenue NW., Washington, DC 20580, (202) 326–2022.

SUPPLEMENTARY INFORMATION: Section 4314(c) (1) through (5) of title 5, U.S.C., requires each agency to establish, in accordance with regulations prescribed by the Office of Personnel Management, one or more performance review boards. The board shall, among other things, review and evaluate the initial appraisal of a senior executive's performance by the supervisor, and make appropriate recommendations to the appointing authority.

The following persons are appointed to the FTC's Performance Review Board Roster: Office of the Chairman: James Hamill; Office of the Inspector General: Frederick Zirkel; Office of the Executive Director: Robert Walton, Rosemarie Straight, Alan Proctor, James Giffin, Richard Arnold; General Counsel: Stephen Calkins, Jay Shaffer, Ernest Isenstadt, Christian White; Office of the Secretary: Donald Clark; Bureau of Competition: William Baer, Mary Lou Steptoe, Mark Whitener, Ronald Rowe, Michael McNeely, Walter Winslow, Mark Horoschak; Bureau of Consumer Protection: Joan Bernstein, Teresa Schwartz, Lydia Parnes, David Medine, Eileen Harrington, Dean Graybill, C. Lee Peeler; Bureau of Economics: Jonathan Baker, Ronald Bond, Gary Roberts, Paul Pautler.

Donald S. Clark,

Secretary.

[FR Doc. 95–16448 Filed 7–3–95; 8:45 am]

BILLING CODE 6750–01–M

DEPARTMENT OF HEALTH AND HUMAN SERVICES

Administration for Children and Families

Agency Information Collection Under OMB Review

Title: Small Business Innovation Research Program ''Phase I Proposal Cover Sheet''.

OMB No.: 0980–0193.

Description: These forms are needed for inclusion in the Administration for Children and Families' biennial Research Program's research and development solicitation. They are required by Policy Directive from the Small Business Administration.

Respondents: State governments.

Title	Number of respondents	Number of responses per respondent	Average burden per response	Burden
Policy Directive SBIR	500	1	4	2000
Estimated Total Annual Burden: 2000.				

Additional Information: Copies of the proposed collection may be obtained from Bob Sargis of the Division of Information Resource Management, ACF, by calling (202) 690–7275.

OMB Comment: Consideration will be given to comments and suggestions received within 30 days of publication. Written comments and recommendations for the proposed information collection should be sent directly to the following: Office of Management and Budget, Paperwork Reduction Project, 725 17th Street NW., Washington, DC 20503, Attn: Ms. Wendy Taylor.

Dated: June 26, 1995.

Roberta Katson,

Acting Director, Office of Information Resource Management.

[FR Doc. 95–16437 Filed 7–3–95; 8:45 am]

BILLING CODE 4184–01–M

a vertical merger—premerger market power in a relevant market—is satisfied.

[7] The complaint also alleges that vertical integration of SGI with Alias and Wavefront will foster anticompetitive price discrimination against certain entertainment graphics customers. If the customers already are differentiable according to their demand elasticities for SGI workstations (or for the acquired software products), it is not clear how the vertical integration enhances the probability of price discrimination. To the extent that price discrimination possibilities are enhanced, it would appear to be as a result of the horizontal combination of Alias and Wavefront. And if SGI and the combined Alias/Wavefront would have market power in their respective complementary markets, the most likely effect of vertical integration may be lower prices.

[8] For a discussion of why nondiscrimination remedies are problematic, see Timothy Brennan, Why Regulated Firms Should Be Kept Out of Unregulated Markets: Understanding the Divestiture in *U.S.* v. *AT&T*, 32 Antitrust Bulletin 741 (1987).

Agency Information Collection Under OMB Review

Title: Quarterly Performance Report.

OMB No.: 0970–0036.

Description: The respondents are State Refugee Coordinators who will compile and enter data on refugee receipt of cash assistance and medical assistance as well as utilization of social services by category. ORR uses this information to manage the program, evaluate the effectiveness of individual programs, and to project expenditures for upcoming quarters.

Respondents: State governments.

Title	Number of respondents	Number of responses per respondent	Average burden per response	Burden
ORR–6	48	4	3.875	744

Estimated Total Annual Burden: 744.

Additional Information: Copies of the proposed collection may be obtained from Bob Sargis of the Division of Information Resource Management, ACF, by calling (202) 690–7275.

OMB Comment: Consideration will be given to comments and suggestions received within 30 days of publication. Written comments and recommendations for the proposed information collection should be sent directly to the following: Office of Management and Budget, Paperwork Reduction Project, 725 17th Street NW., Washington, DC 20503, Attn: Ms. Wendy Taylor.

Dated: June 27, 1995.

Roberta Katson,

Acting Director, Office of Information Resource Management.

[FR Doc. 95–16438 Filed 7–3–95; 8:45 am]

BILLING CODE 4184–01–M

Food and Drug Administration

[Docket No. 80D–0415]

Miscellaneous Compliance Policy Guide (CPG); Revocation

AGENCY: Food and Drug Administration, HHS.

ACTION: Notice.

SUMMARY: The Food and Drug Administration (FDA) is announcing the revocation of CPG 7119.13, ''Canned and Cooked/Frozen Shrimp—Adulterated by Decomposition,'' because it no longer reflects agency policy. This action is being taken to ensure that FDA's CPG's accurately reflect FDA policy and to limit confusion.

EFFECTIVE DATE: July 5, 1995.

FOR FURTHER INFORMATION CONTACT: Mary I. Snyder, Center for Food Safety and Applied Nutrition (HFS–416), Food and Drug Administration, 200 C St. SW., Washington, DC 20204, 202–418–3160.

SUPPLEMENTARY INFORMATION: FDA is revoking CPG 7119.13 ''Canned and Cooked/Frozen Shrimp—Adulterated by Decomposition,'' because it no longer reflects FDA policy. The CPG provides guidance on when entries of canned and cooked/frozen shrimp should be detained based on decomposition. The CPG focuses on the results of analysis for indole levels in the shrimp. The mere absence of indole does not mean, however, that the shrimp is acceptable. Organoleptic analysis can also be used to determine whether the shrimp is adulterated.

FDA's experience using CPG 7119.13 as guidance has been that this CPG has been subject to misinterpretation by industry. To minimize the apparent confusion that exists as a result of this misinterpretation, FDA has decided to revoke the CPG. FDA intends to use any appropriate methods of analysis for examining canned and cooked/frozen shrimp offered for import.

Dated: June 28, 1995.

Ronald G. Chesemore

Associate Commissioner for Regulatory Affairs.

[FR Doc. 95–16318 Filed 7–3–95; 8:45 am]

BILLING CODE 4160–01–F

DEPARTMENT OF HOUSING AND URBAN DEVELOPMENT

Office of Administration

[Docket No. FR–3917–N–05]

Notice of Submission of Proposed Information Collection to OMB

AGENCY: Office of Administration, HUD.

ACTION: Notice.

SUMMARY: The proposed information collection requirement described below has been submitted to the Office of Management and Budget (OMB) for review, as required by the Paperwork Reduction Act. The Department is soliciting public comments on the subject proposal.

ADDRESSES: Interested persons are invited to submit comments regarding this proposal. Comments must be received within thirty (30) days from the date of this Notice. Comments should refer to the proposal by name and should be sent to: Joseph F. Lackey, Jr., OMB Desk Officer, Office of Management and Budget, New Executive Office Building, Washington, DC 20503.

FOR FURTHER INFORMATION CONTACT: Kay F. Weaver, Reports Management Officer, Department of Housing and Urban Development, 451 7th Street, Southwest, Washington, DC 20410, telephone (202) 708–0050. This is not a toll-free number. Copies of the proposed forms and other available documents submitted to OMB may be obtained from Ms. Weaver.

SUPPLEMENTARY INFORMATION: The Department has submitted the proposal for the collection of information, as described below, to OMB for review, as required by the Paperwork Reduction Act (44 U.S.C. Chapter 35).

The Notice lists the following information: (1) The title of the information collection proposal; (2) the office of the agency to collect the information; (3) the description of the need for the information and its proposed use; (4) the agency form number, if applicable; (5) what members of the public will be affected by the proposal; (6) an estimate of the total number of hours needed to prepare the information submission including number of respondents, frequency of response, and hours of response; (7) whether the proposal is new or an extension, reinstatement, or vision of an information collection requirement; and (8) the names and telephone numbers of an agency official familiar with the proposal and of the OMB Desk Officer for the Department.

Authority: Section 3507 of the Paperwork Reduction Act, 44 U.S.C. 3507; Section 7(d) of the Department of Housing and Urban Development Act, 42 U.S.C. 3535(d).

Dated: June 22, 1995.

David S. Cristy,

Director, Information Resources Management Policy and Management Division.

Notice of Submission of Proposed Information Collection to OMB

Proposal: American Housing Survey (AHS)—1996 Metropolitan Sample

Office: Policy Development and Research

Description of the Need for the Information and its Proposed Use: The 1996 ASH–MS is a longitudinal study that collects current information on the quality, availability, and cost of housing in eleven selected metropolitan areas. The study also provides information on demographic and other characteristics of the occupants. Federal and local government agencies use AHS data to evaluate housing issues.

Form number: AHS–61, 62, 63, 66, 68, and 590

Respondents: Individuals or Households

Reporting burden:

	Number of respondents	×	Frequency of response	×	Hours per response	=	Burden hours
Information collection	67,800	...	1	...	.54	...	38,714

Total Estimated Burden Hours: 38,714.

Status: Revision.

Contact: Duane T. McGough, HUD, (202) 708–1060; Joseph F. Lackey, Jr., OMB, (202) 395–7316.

Dated: June 22, 1995.

[FR Doc. 95–16336 Filed 7–3–95; 8:45 am]

BILLING CODE 4210–01–M

[Docket No. FR–3917–N–04]

Notice of Submission of Proposed Information Collection to OMB

AGENCY: Office of Administration, HUD.

ACTION: Notice.

SUMMARY: The proposed information collection requirement described below has been submitted to the Office of Management and Budget (OMB) for review, as required by the Paperwork Reduction Act. The Department is soliciting public comments on the subject proposal.

ADDRESSES: Interested persons are invited to submit comments regarding this proposal. Comments must be received within thirty (30) days from the date of this Notice. Comments should refer to the proposal by name and should be sent to: Joseph F. Lackey, Jr., OMB Desk Officer, Office of Management and Budget, New Executive Office Building, Washington, DC 20503.

FOR FURTHER INFORMATION CONTACT: Kay F. Weaver, Reports Management Officer, Department of Housing and Urban Development, 451 7th Street, Southwest, Washington, DC 20410, telephone (202) 708–0050. This is not a toll-free number. Copies of the proposed forms and other available documents submitted to OMB may be obtained from Ms. Weaver.

SUPPLEMENTARY INFORMATION: The Department has submitted the proposal for the collection of information, as described below, to OMB for review, as required by the Paperwork Reduction Act (44 U.S.C. Chapter 35).

The Notice lists the following information: (1) The title of the information collection proposal; (2) the office of the agency to collect the information; (3) the description of the need for the information and its proposed use; (4) the agency form number, if applicable; (5) what members of the public will be affected by the proposal; (6) an estimate of the total number of hours needed to prepare the information submission including number of respondents, frequency of response, and hours of response; (7) whether the proposal is new or an extension, reinstatement, or revision of an information collection requirement; and (8) the names and telephone numbers of an agency official familiar with the proposal and of the OMB Desk Officer for the Department.

Authority: Section 3507 of the Paperwork Reduction Act, 44 U.S.C. 3507; Section 7(d) of the Department of Housing and Urban Development Act, 42 U.S.C. 3535(d).

Dated: June 22, 1995.

David S. Cristy,

Director, Information Resources Management Policy and Management Division.

Notice of Submission of Proposed Information Collection to OMB

Proposal: Statement of Profit and Loss

Office: Housing

Description of the Need for the Information and its Proposed Use: Multifamily project owners are required to submit HUD–92410 each year to the Department as part of their annual financial statement. The data will be used by HUD to review request for rent increases and to prevent defaults by monitoring the reasonableness of the projects operating expenses and the adequacy of the projects cash flow.

Form Number: HUD–92410

Respondents: Business or Other For-Profit, Individuals or Households, Not-For-Profit Institutions, and the Federal Government

Reporting burden:

	Number of respondents	x	Frequency of response	x	Hours per response	=	Burden hours
HUD–92410	16,296	...	1	...	1	...	16,296

Total Estimated Burden Hours: 16,296
Status: Reinstatement with changes
Contact: Barbara Hunter, HUD, (202) 708–3944; Joseph F. Lackey, Jr., OMB, (202) 395–7316.

Dated: June 11, 1995.

[FR Doc. 95–16337 Filed 7–3–95; 8:45 am]

BILLING CODE 4210–01–M

Office of the Assistant Secretary for Housing-Federal Housing Commissioner

[Docket No. N–95–3785; FR–3724–N–03]

Interest Rate for the Section 235(r) Mortgage Insurance Program

AGENCY: Office of the Assistant Secretary for Housing-Federal Housing Commissioner, HUD.

ACTION: Notice of decrease in interest rate.

SUMMARY: This notice announces a change in the maximum interest rate for mortgages to be insured under section 235(r) of the National Housing Act. The section 235(r) maximum interest rate is to be determined by the Secretary of HUD and published in the **Federal Register**. Mortgage market conditions now dictate that the Secretary decrease the section 235(r) maximum rate from 9.00 percent to 8.50 percent. There is no change being made in the maximum margin of additional percentage points that may be added to the maximum rate if the established conditions are met. Therefore, the maximum for the premium section 235(r) interest rate will be 10.00 percent (8.50 percent for the rate of interest and 1.50 percent for the margin of additional percentage points).

EFFECTIVE DATE: July 5, 1995.

FOR FURTHER INFORMATION CONTACT: John N. Dickie, Director, Program Evaluation Division, Room B–133, Department of Housing and Urban Development, 451 Seventh Street, SW., Washington, DC 20410; telephone (202) 755–7470, Ext. 117; (TDD) (202) 708–4594. (These are not toll-free numbers.)

SUPPLEMENTARY INFORMATION: Section 235(r) of the National Housing Act (12 U.S.C. 1715z) authorizes the Secretary to insure mortgages that refinance existing mortgages insured under section 235. The purpose of the program is to reduce the interest rate insured and assisted under section 235 in order that the assistance payments the Department pays on behalf of mortgagors may be reduced. The regulations implementing the program are contained in subpart H of 24 CFR part 235—refinancing of mortgages under section 235(r).

The interest rate for these loans is set by the Secretary and published in the **Federal Register** as authorized by 24 CFR 235.1202(b)(3). The previous section 235(r) interest rate of 9.00 percent was published in the **Federal Register** on February 16, 1995 (60 FR 9043). The Department has determined that market conditions dictate a change in the section 235(r) interest rate. The change will take effect on the date of publication of this notice.

The most recent HUD survey of Mortgage Market conditions (i.e., Secondary Market Prices and Yields), an OMB-designated Principal Federal Indicator, found that the dominant national FHA rate being quoted to potential homebuyers for ''lock-in'' commitments of 60 days or more was 8.50 percent on April 1, 1995, with an average of .62 points, and an effective interest rate of 8.59 percent.

Most FHA mortgages are funded in the GNMA mortgage-backed securities market. There is a 50 basis point spread between FHA contract interest rates and GNMA coupon rates (this covers the GNMA guarantee fee and servicing cost). On May 3, 1995, the GNMA 7.50 percent coupon securities (8.00 percent FHA loans) were priced at about 2 points discount. On the other hand, the GNMA 8.00 percent security (8.50 percent FHA loans) was trading in the two-month forward market at around par, while the 8.50 percent GNMA coupons (9.00 percent FHA mortgages) traded at about 2 points over par (i. e., premium).

Adjusting the section 235(r) rate to 8.50 percent will bring this rate back into line with the rest of the FHA current production loans. Therefore, the maximum rate for section 235(r) mortgages is 8.50 percent beginning with the publication date of this notice. The maximum margin of additional percentage points that may be added to the maximum rate under 24 CFR 235.1202(b)(3)(i)(B) will remain at 1.50 percent.

The subject matter of this notice is categorically excluded from HUD's environmental clearance procedures, in accordance with 24 CFR 50.20(l). For that reason, no environmental finding has been prepared for this notice.

Dated: May 22, 1995.

Nicolas P. Retsinas,

Assistant Secretary for Housing—Federal Housing Commissioner.

[FR Doc. 95–16335 Filed 7–3–95; 8:45 am]

BILLING CODE 4210–27–P

Office of the Secretary

[Docket No. N–95–3892; FR–3864–N–03]

Regulatory Waiver Requests Granted

AGENCY: Office of the Secretary, HUD.

ACTION: Public notice of the granting of regulatory waivers. Request: January 1, 1995 through March 31, 1995.

SUMMARY: Under the Department of Housing and Urban Development Reform Act of 1989 (Reform Act), the Department (HUD) is required to make public all approval actions taken on waivers of regulations. This notice is the seventeenth such notice being published on a quarterly basis, providing notification of waivers granted during the preceding reporting period. The purpose of this notice is to comply with the requirements of section 106 of the Reform Act.

FOR FURTHER INFORMATION CONTACT: For general information about this Notice, contact Camille E. Acevedo, Assistant General Counsel for Regulations, Room 10276, Department of Housing and Urban Development, 451 Seventh Street, SW, Washington, DC 20410; telephone 202–708–3055; TDD: (202) 708–3259. (These are not toll-free numbers.) For information concerning a particular waiver action, about which public notice is provided in this document, contact the person whose name and address is set out, for the particular item, in the accompanying list of waiver-grant actions.

SUPPLEMENTARY INFORMATION: As part of the Housing and Urban Development Reform Act of 1989, the Congress adopted, at HUD's request, legislation to limit and control the granting of regulatory waivers by the Department. Section 106 of the Act (Section 7(q)(3)) of the Department of Housing and Urban Development Act, 42 U.S.C. 3535(q)(3), provides that:

1. Any waiver of a regulation must be in writing and must specify the grounds for approving the waiver;

2. Authority to approve a waiver of a regulation may be delegated by the Secretary only to an individual of Assistant Secretary rank or equivalent rank, and the person to whom authority to waive is delegated must also have authority to issue the particular regulation to be waived;

3. Not less than quarterly, the Secretary must notify the public of all waivers of regulations that the Department has approved, by publishing a Notice in the **Federal Register**. These Notices (each covering the period since the most recent previous notification) shall:

a. Identify the project, activity, or undertaking involved;

b. Describe the nature of the provision waived, and the designation of the provision;

c. Indicate the name and title of the person who granted the waiver request;

d. Describe briefly the grounds for approval of the request;

e. State how additional information about a particular waiver grant action may be obtained.

Section 106 also contains requirements applicable to waivers of HUD handbook provisions that are not relevant to the purposes of today's document.

Today's document follows publication of HUD's Statement of Policy on Waiver of Regulations and Directives Issued by HUD (56 FR 16337, April 22, 1991). This is the seventeenth Notice of its kind to be published under Section 106. It updates HUD's waiver-grant activity from January 1, 1995 through March 31, 1995. It also includes waiver-grant activity that was inadvertently omitted from the Department's notice covering the period from October 1, 1994 and December 31, 1994. In approximately three months, the Department will publish a similar Notice, providing information about waiver-grant activity for the period from April 1, 1995 through June 30, 1995.

For ease of reference, waiver requests grant by departmental officials authorized to grant waivers are listed in a sequence keyed to the section number of the HUD regulation involved in the waiver action. For example, a waiver-grant action involving exercise of authority under 24 CFR 24.200 (involving the waiver of a provision in part 24) would come early in the sequence, while waivers in the Section 8 and Section 202 programs (24 CFR Chapter VIII) would be among the last matters listed. Where more than one regulatory provision is involved in the grant of a particular waiver request, the action is listed under the section number of the first regulatory requirement in Title 24 that is being waived as part of the waiver-grant action. (For example, a waiver of both § 811.105(b) and § 811.107(a) would appear sequentially in the listing under § 811.105(b).) Waiver-grant actions involving the same initial regulatory citation are in time sequence beginning with the earliest-dated waiver grant action.

Should the Department receive additional reports of waiver actions taken during the period covered by this report before the next report is published, the next updated report will include these earlier actions, as well as those that occur between April 1, 1995 through June 30, 1995.

Accordingly, information about approved waiver requests pertaining to regulations of the Department is provided in the Appendix that follows this Notice.

Dated: June 20, 1995.

Henry G. Cisneros,

Secretary.

Appendix—Listing of Waivers of Regulatory Requirements Granted by Officers of the Department of Housing and Urban Development January 1, 1995 Through March 31, 1995

Note to Reader: The person to be contacted for additional information about these waiver-grant items in this listing is: Mr. James B. Mitchell, Director, Financial Services Division, U.S. Department of Housing and Urban Development, 470 L' Enfant Plaza East, Suite 3119, Washington, DC 20024, Phone: (202) 755–7450 x125.

Regulation: 24 CFR 811.107(a)(2), 811.107(b), 811.108(A)(1), 811.108(a)(3), 811.114(b)(3), 811.114(d), 811.115(b).

Project/Activity: The Louisville (Kentucky) Housing Assistance Corporation refunding of bonds which financed a Section 8 assisted project, Phoenix Hill Plaza Apartments.

Nature of Requirement: The Regulations set conditions under which HUD may grant a Section 11(b) letter of exemption of multifamily housing revenue bonds from Federal income taxation and authorize call of debentures prior to maturity.

Granted by: Nicolas P. Retsinas, Assistant Secretary for Housing-Federal Housing Commissioner.

Date Granted: January 31, 1995.

Reasons Waived: The part 811 regulations cited above were intended for original bond financing transactions and do not fit the terms of refunding transactions. To credit enhance refunding bonds not fully secured by the FHA mortgage amount, HUD also agrees not to exercise its option under 24 CFR 207.259(e) to call debentures prior to maturity. This refunding proposal was approved by HUD on January 17, 1995. Refunding bonds have been priced to an average yield of 6.94%. The tax-exempt refunding bond issue of $1,345,000 at current low-interest rates will save Section 8 subsidy. The Treasury also gains long-term tax revenue benefits through replacement of outstanding tax-exempt coupons of 11.7% at the call date with tax-exempt bonds at a substantially lower interest rate. The refunding will also substantially reduce the FHA mortgage interest rate at expiration of the HAP contract from 12% to 7.98%, thus reducing FHA mortgage insurance risk. The refunding serves the important public purposes of reducing HUD's Section 8 program costs, improving Treasury tax revenues (helping reduce the budget deficit), and increasing the likelihood that the projects will continue to provide housing for low-income families after subsidies expire, a priority HUD objective.

2. Regulation: 24 CFR 811.107(a)(2), 811.107(b), 811.108(a)(1), 811.108(a)(3), 811.114(b)(3), 811.114(d), 811.115(b).

Project/Activity: The Phoenix Housing Finance Corporation refunding of bonds which financed three Section 8 assisted projects, Filmore I, Hacienda del Rio, and Paradise Shadows Apartments.

Nature of Requirement: The Regulations set conditions under which HUD may grant a Section 11(b) letter of exemption of multifamily housing revenue bonds from Federal income taxation and authorize call of debentures prior to maturity.

Granted by: Nicolas P. Retsinas, Assistant Secretary for Housing-Federal Housing Commissioner.

Date Granted: February 13, 1995.

Reasons Waived: The part 811 regulations cited above were intended for original bond financing transactions and do not fit the terms of refunding transactions. To credit enhance refunding bonds not fully secured by the FHA mortgage amount, HUD also agrees not to exercise its option under 24 CFR 207.259(e) to call debentures prior to maturity. This refunding proposal was approved by HUD on January 25, 1995. Refunding bonds have been priced to an average yield of 6.98%. The tax-exempt refunding bond issue of $7,700,000 at current low-interest rates will save Section 8 subsidy. The Treasury also gains long-term tax revenue benefits through replacement of outstanding tax-exempt coupons of 10.75% at the call date in 1995 with tax-exempt bonds at a substantially lower interest rates. The refunding will also substantially reduce the FHA mortgage interest rates at expiration of the HAP contract, from 11.6 and 10.75% to 7.75%, thus reducing FHA mortgage insurance risk. The refunding serves the important public purposes of reducing HUD's Section 8 program costs, improving Treasury tax revenues (helping reduce the budget deficit), and increasing the likelihood that projects will continue to provide housing for low-income families after subsidies expire, a priority HUD objective.

3. Regulation: 24 CFR 811.107(a)(2), 811.108(a)(3), 811.114(b)(3), 811.114(d), 811.115(b).

Project/Activity: Mechanicville, New York HDC refunding of bonds which financed a Section 8 assisted project, Mechanicville Elderly Project Apartments (FHA No. 013–35100).

Nature of Requirement: The Regulations set conditions under which HUD may grant a Section 11(b) letter of exemption of multifamily housing revenue bonds from Federal income taxation.

Granted by: Nicolas P. Retsinas, Assistant Secretary for Housing-Federal Housing Commissioner.

Date Granted: February 27, 1995.

Reasons Waived: The part 811 regulations cited above were intended for original bond financing transactions and do not fit the terms of refunding transactions. This refunding proposal was approved by HUD on February 22, 1995. Refunding bonds have been priced to an average yield of 6.90%. The tax-exempt refunding bond issue of $3,425,000 at current low-interest rates will save Section 8 subsidy. The Treasury also gains long-term tax revenue benefits through replacement of outstanding tax-exempt coupons of 9.5%–10.4% at the call date with

lower yield tax-exempt bonds. The refunding will also substantially reduce the FHA mortgage interest rate at expiration of the HAP contract from 10.73% to 7.3%, thus reducing FHA mortgage insurance risk. The refunding serves the important public purposes of reducing HUD's Section 8 program costs, improving Treasury tax revenues, (helping reduce the budget deficit), and increasing the likelihood that the projects will continue to provide housing for low-income families after subsidies expire, a priority HUD objective.

4. Regulation: 24 CFR 811.107(a)(2), 811.107(b), 811.108(a)(1), 811.108(a)(3), 811.114(b)(3), 811.114(d), and 811.115(b).

Project/Activity: The Ohio Capital Corporation for Housing refunding of bonds which financed a Section 8 assisted project, Eastland Wood Apartments, FHA No. 042–35336.

Nature of Requirement: The Regulations set conditions under which HUD may grant a Section 11(b) letter of exemption of multifamily housing revenue bonds from Federal income taxation and authorize call of debentures prior to maturity.

Granted by: Nicolas P. Retsinas, Assistant Secretary for Housing-Federal Housing Commissioner.

Date Granted: February 27, 1995.

Reasons Waived: The part 811 regulations cited above were intended for original bond financing transactions and do not fit the terms of refunding transactions. To credit enhance refunding bonds not fully secured by the FHA mortgage amount, HUD also agrees not to exercise its option under 24 CFR Section 207.259(e) to call debentures prior to maturity. This refunding proposal was approved by HUD on February 22, 1995. Refunding bonds have been priced to an average yield of 6.45%. The tax-exempt refunding bond issue of $5,485,000 at current low-interest rates will save Section 8 subsidy. The Treasury also gains long-term tax revenue benefits through replacement of outstanding tax-exempt coupons of 9% at the call date in 1995 with tax-exempt bonds at a substantially lower interest rate. The refunding will also substantially reduce the FHA mortgage interest rates at expiration of the HAP contract, from 9 to 6.85%, thus reducing FHA mortgage insurance risk. The refunding serves the important public purposes of reducing HUD's Section 8 program costs, improving Treasury tax revenues (helping reduce the budget deficit), and increasing the likelihood that projects will continue to provide housing for low-income families after subsidies expire, a priority HUD objective.

5. Regulation: 24 CFR Sections 811.107(a)(2), 811.107(b), 811.108(a)(1), 811.108(a)(3), 811.114(b)(3), 811.114(d), and 811.115(b).

Project/Activity: The Ohio Capital Corporation for Housing refunding of bonds which financed a Section 8 assisted project, the Westview Apartments, FHA No. 042–35266.

Nature of Requirement: The Regulations set conditions under which HUD may grant a Section 11(b) letter of exemption of multifamily housing revenue bonds from Federal income taxation and authorize call of debentures prior to maturity.

Granted by: Nicolas P. Retsinas, Assistant Secretary for Housing-Federal Housing Commissioner.

Date Granted: March 14, 1995.

Reasons Waived: The part 811 regulations cited above were intended for original bond financing transactions and do not fit the terms of refunding transactions. To credit enhance refunding bonds not fully secured by the FHA mortgage amount, HUD also agrees not to exercise its option under 24 CFR Section 207.259(e) to call debentures prior to maturity. This refunding proposal was approved by HUD on February 8, 1995. Refunding bonds have been priced to an average yield of 6.19%. The tax-exempt refunding bond issue of $4,680,000 at current low-interest rates will save Section 8 subsidy. The Treasury also gains long-term tax revenue benefits through replacement of outstanding tax-exempt coupons of 10.3% at the call date in 1995 with tax-exempt bonds at a substantially lower interest rate. The refunding will also substantially reduce the FHA mortgage interest rates at expiration of the HAP contract, from 10.5% to 6.55%, thus reducing FHA mortgage insurance risk. The refunding serves the important public purposes of reducing HUD's Section 8 program costs, improving Treasury tax revenues (helping reduce the budget deficit), and increasing the likelihood that projects will continue to provide housing for low-income families after subsidies expire, a priority HUD objective.

6. Regulation: 24 CFR 811.107(a)(2), 811.107(b), 811.108(a)(1), 811.108(a)(3), 811.114(b)(3), 811.114(d), and 811.115(b).

Project/Activity: The Ohio Capital Corporation for Housing refunding of bonds which financed a Section 8 assisted project, the Springhill Homes Apartments, FHA No. 042–35391.

Nature of Requirement: The Regulations set conditions under which HUD may grant a Section 11(b) letter of exemption of multifamily housing revenue bonds from Federal income taxation and authorize call of debentures prior to maturity.

Granted by: Nicolas P. Retsinas, Assistant Secretary for Housing-Federal Housing Commissioner.

Date Granted: March 28, 1995.

Reasons Waived: The part 811 regulations cited above were intended for original bond financing transactions and do not fit the terms of refunding transactions. To credit enhance refunding bonds not fully secured by the FHA mortgage amount, HUD also agrees not to exercise its option under 24 CFR Section 207.259(e) to call debentures prior to maturity. This refunding proposal was approved by HUD on February 23, 1995. Refunding bonds have been priced to an average yield of 6.44%. The tax-exempt refunding bond issue of $1,630,000 at current low-interest rates will save Section 8 subsidy. The Treasury also gains long-term tax revenue benefits through replacement of outstanding tax-exempt coupons of 11.78% at the call date in 1995 with tax-exempt bonds at a substantially lower interest rate. The refunding will also substantially reduce the FHA mortgage interest rates at expiration of the HAP contract, from 12% to 6.75%, thus reducing FHA mortgage insurance risk. The refunding serves the important public purposes of reducing HUD's Section 8 program costs, improving Treasury tax revenues (helping reduce the budget deficit), and increasing the likelihood that projects will continue to provide housing for low-income families after subsidies expire, a priority HUD objective.

7. Regulation: 24 CFR 811.114(d), 811.115(b), 811.117.

Project/Activity: The District of Columbia HFA refunding of bonds which financed a Section 8 assisted project, the Oak Street Apartments (FHA No. 000–35230).

Nature of Requirement: The Regulations set conditions under which HUD may grant a Section 11(b) letter of exemption of multifamily housing revenue bonds from Federal income taxation.

Granted by: Nicolas P. Retsinas, Assistant Secretary for Housing-Federal Housing Commissioner.

Date Granted: January 30, 1995.

Reasons Waived: The part 811 regulations cited above were intended for original bond financing transactions and do not fit the terms of refunding transactions under Section 103 of the Tax Code. This refunding proposal was approved by HUD on September 29, 1994. Refunding bonds have been priced to an average yield of 7.17%. The tax-exempt refunding bond issue of $1,865,000 at current low-interest rates will save Section 8 subsidy and substantially reduce the original mortgage interest rate of 10.5%. The Treasury also gains long-term tax revenue benefits through replacement of outstanding tax-exempt coupons of 10.5% at the call date with tax-exempt bonds at a substantially lower interest rate. The refunding serves the important public purposes of reducing HUD's Section 8 program costs, improving Treasury tax revenues (helping reduce the budget deficit), and increasing the likelihood that projects will continue to provide housing for low-income families after subsidies expire, a priority HUD objective.

Note to Reader: The person to be contacted for additional information about these waiver-grant items in this listing is: Debbie Ann Wills, Field Management Officer, U.S. Department of Housing & Urban Development, Office of Community Planning and Development, 451 7th Street SW., Washington, DC 20410–7000, Telephone: (202) 708–2565.

8. Regulation: 24 CFR 51.102(a)(2).

Project/Activity: Salvation Army's Harbor Light Center is requesting a waiver of 24 CFR 51.102(a)(2) which requires that a project exposed to unacceptable noise levels complete an Environmental Impact Statement (EIS).

Nature of Requirement: Under the regulations a locality must complete an EIS if a project is exposed to unacceptable noise levels.

Granted by: Andrew Cuomo, Assistant Secretary for Community Planning & Development.

Date Granted: January 18, 1995.

Reasons Waived: It was determined that the project met the requirements of § 51.104(b)(2) of the noise regulation in that noise was the only environmental issue.

9. Regulation: 24 CFR 92.205(c).

Project/Activity: Lake County, Illinois requested a waiver to permit rehabilitation which utilizes HOME funds, to pay for flood and wind damage to four rental properties within its jurisdiction. Costs for work on each unit totaled less than $1,000.

Nature of Requirement: Section 92.205(c) provides that rehabilitation assisted with HOME funds cost, at a minimum, $1,000 per unit.

Granted by: Andrew Cuomo, Assistant Secretary for Community Planning & Development.

Date Granted: January 18, 1995.

Reasons Waived: The waiver was granted, for good cause, to aid in Lake County's disaster recovery effort.

10. Regulation: 24 CFR 92.222(b).

Project/Activity: The City of Milwaukee requested that the match reduction made because the area was declared a natural disaster area be extended for Fiscal 1995.

Nature of Requirement: Under the HOME Program, each participating jurisdiction must match its allocation of HOME Program funds. Jurisdictions designated federal ''natural disaster areas'' are given relief from the match requirements for one year.

Granted by: Andrew Cuomo, Assistant Secretary for Community Planning & Development.

Date Granted: January 17, 1995.

Reasons Waived: To relieve the jurisdiction of coming up with matching funds that would delay the use of HOME funds in an emergency situation.

11. Regulation: 24 CFR 92.222(b).

Project/Activity: The City of St. Joseph, Missouri requested that the match reduction made because the area was declared a natural disaster area be extended for Fiscal 1995.

Nature of Requirement: Under the HOME Program, each participating jurisdiction must match its allocation of HOME Program funds. Jurisdictions designated federal ''natural disaster areas'' are given relief from the match requirements for one year.

Granted by: Andrew Cuomo, Assistant Secretary for Community Planning & Development.

Date Granted: February 13, 1995.

Reasons Waived: To relieve the jurisdiction of coming up with matching funds that would delay the use of HOME funds in an emergency situation.

12. Regulation: 24 CFR 92.222(b).

Project/Activity: The County of St. Louis, Missouri requested that the match reduction made because the area was declared a natural disaster area be extended for Fiscal 1995.

Nature of Requirement: Under the HOME Program, each participating jurisdiction must match its allocation of HOME Program funds. Jurisdictions designated federal ''natural disaster areas'' are given relief from the match requirements for one year.

Granted by: Andrew Cuomo, Assistant Secretary for Community Planning & Development.

Date Granted: March 7, 1995.

Reasons Waived: To relieve the jurisdiction of coming up with matching funds that would delay the use of HOME funds in an emergency situation.

13. Regulation: 24 CFR 92.222(b).

Project/Activity: The Cities of Davenport, Iowa and Lincoln, Nebraska, and the State of Iowa all requested that the match reduction made because the areas were declared natural disaster areas be extended for Fiscal 1995.

Nature of Requirement: Under the HOME Program, each participating jurisdiction must match its allocation of HOME Program funds. Jurisdictions designated federal ''natural disaster areas'' are given relief from the match requirements for one year.

Granted by: Andrew Cuomo, Assistant Secretary for Community Planning & Development.

Date Granted: March 16, 1995.

Reasons Waived: To relieve the jurisdictions from coming up with matching funds that would delay the use of HOME funds in emergency situations.

14. Regulation: 24 CFR 92.254.

Project/Activity: State of California, Santa Cruz County requested a waiver of 24 CFR 92.254 which limits the value of homes purchased using HOME funds.

Nature of Requirement: he HOME regulations at 24 CFR 92.254 state that for housing to qualify as affordable housing for homeownership, its purchase price and/or after rehabilitation value cannot exceed 95 percent of the median purchase price for single family housing for the jurisdiction as determined by HUD. If the jurisdiction believes the limits determined by HUD do not accurately reflect 95 percent of the median purchase price, the regulation provides that it may appeal the limits in accordance with 24 CFR 203.18(b)

Granted by: Andrew Cuomo, Assistant Secretary for Community Planning & Development

Date Granted: January 12, 1995.

Reasons Waived: The HUD Field Office presented data for single family home sales that was determined by the Assistant Secretary to be a reasonable and accurate representation of local market conditions and, therefore, the HOME purchase price/value limits were revised upward for Santa Cruz County.

15. Regulation: 24 CFR 92.254.

Project/Activity: State of California, Napa County requested a waiver of 24 CFR 92.254 which limits the value of homes purchased using HOME funds.

Nature of Requirement: The HOME regulations at 24 CFR 92.254 state that for housing to qualify as affordable housing for homeownership, its purchase price and/or after rehabilitation value cannot exceed 95 percent of the median purchase price for single family housing for the jurisdiction as determined by HUD. If the jurisdiction believes the limits determined by HUD do not accurately reflect 95 percent of the median purchase price, the regulation provides that it may appeal the limits in accordance with 24 CFR 203.18(b)

Granted by: Andrew Cuomo, Assistant Secretary for Community Planning & Development.

Date Granted: March 20, 1995.

Reasons Waived: The HUD Field Office presented data for single family home sales that was determined by the Assistant Secretary to be a reasonable and accurate representation of local market conditions and, therefore, the HOME purchase price/value limits were revised upward for Napa County.

16. Regulation: 24 CFR 92.254(c)(1)&(3) & 92.252(e)(1)(3).

Project/Activity: Iowa City, Iowa is requesting a waiver of 24 CFR 92.254 (c)(1)&(3) & 92.252(e)(1)(3) to permit one of its community housing development organizations (CHDOs) to use HOME funds to acquire three additional manufactured housing units for its transitional housing programs.

Nature of Requirement: The HOME regulations require that manufactured housing units be situated on a permanent foundation and be located on land that is held in a fee-simple title, land-trust, or long term ground lease with a term at least equal to the affordability period.

Granted by: Andrew Cuomo, Assistant Secretary for Community Planning & Development.

Date Granted: January 31, 1995.

Reasons Waived: The regulations were waived to allow the City to provide needed additional transitional housing at a lower cost.

17. Regulation: 24 CFR 92.258.

Project/Activity: The City of Pueblo, Colorado requested a waiver of 24 CFR 92.258 of the HOME regulations to waive the 30 year affordability period for low-income homebuyers receiving HOME assistance.

Nature of Requirement: 24 CFR 92.258 provides a limitation on the use of HOME funds with FHA mortgage insurance for a period of time equal to the term of the HUD insured mortgage.

Granted by: Andrew Cuomo, Assistant Secretary for Community Planning & Development.

Date Granted: January 31, 1995.

Reasons Waived: The application of § 92.258 of the HOME regulations to the City's program would create an undue hardship for the City and its potential homeowners, and adversely affect the purposes of the Act.

18. Regulation: 24 CFR 291.400.

Project/Activity: A not for profit agency requested a waiver of the 24 month residency for two tenants in a single family property leased under the single family property disposition homeless program.

Nature of Requirement: The regulations at § 291.400 prohibit a non-profit organization or a community participating in the Single Family Property Disposition Leasing Program from extending a lease to the same tenant for a period beyond 24 months.

Granted by: Andrew Cuomo, Assistant Secretary for Community Planning & Development.

Date Granted: January 31, 1995

Reasons waived: The waiver will give a non-profit ten months to purchase the building it is currently leasing.

19. Regulation: 24 CFR 291.400

19. Project/Activity: The Anoka County Community Action Program requested a waiver of the 24 month residency for a tenant in a single family property leased under the single family property disposition homeless program.

Nature of requirement: The regulations at 24 CFR 291.400 prohibit a non-profit

organization or a community participating in the Single Family Property Disposition Leasing Program from extending a lease to the same tenant for a period beyond 24 months.

Granted by: Andrew Cuomo, Assistant Secretary for Community Planning & Development

Date Granted: February 28, 1995.

Reasons Waived: The waiver will allow a formerly homeless family more time to find permanent housing.

20. Regulation: 24 CFR 291.400.

Project/Activity: The Anoka County Community Action Program requested a waiver of the 24 month residency for a tenant in a single family property leased under the single family property disposition homeless program.

Nature of Requirement: The regulations at 24 CFR 291.400 prohibit a non-profit organization or a community participating in the Single Family Property Disposition Leasing Program from extending a lease to the same tenant for a period beyond 24 months.

Granted by: Andrew Cuomo, Assistant Secretary for Community Planning & Development.

Date Granted: March 27, 1995.

Reasons Waived: The waiver will allow a formerly homeless family more time to find permanent housing.

21. Regulation: 24 CFR 511.10(b)(1)

Project/Activity: The City of Greensboro, North Carolina requested a waiver of 24 CFR 511.10(b)(1) of the Rental Rehabilitation regulations so that less than 70 of its funds are used to rehabilitate units containing two or more bedrooms.

Nature of Requirement: 24 CFR 511.10(b)(1) requires that 70 percent of annual grants be used to rehabilitate units containing two or more bedrooms.

Granted by: Andrew Cuomo, Assistant Secretary for Community Planning & Development.

Date Granted: January 31, 1995.

Reasons Waived: It was determined that the City was not able to meet the 70 percent standard because of the type of housing stock available in the jurisdiction.

22. Regulation: 24 CFR 511.75(e).

Project/Activity: New York City, New York requested a waiver of the program closeout requirements of the Rental Rehabilitation program.

Nature of Requirement: The regulations at 24 CFR 511.75(e) state after the final draw of Rental Rehabilitation funds a project completion report must be submitted to HUD within 90 days.

Granted by: Andrew Cuomo, Assistant Secretary for Community Planning & Development.

Date Granted: March 23, 1995.

Reasons Waived: The extension will allow for the completion of the sale of the cooperative units. It was determined that undue hardship would have resulted from applying § 511.75(e) requirements to the subject project and adversely affect the purposes of the Rental Rehabilitation program.

23. Regulation: 24 CFR 570.200(h).

Project/Activity: The City of Yonkers, New York requested a waiver of 24 CFR 570.200(h) regarding reimbursement of pre-agreement costs for the Messiah Baptist Project, a 129 unit-housing complex.

Nature of Requirement: Under the regulations a locality is precluded from obligating CDBG funds before grant award.

Granted by: Andrew Cuomo, Assistant Secretary for Community Planning & Development.

Date Granted: February 16, 1995.

Reasons Waived: HUD determined that failure to grant the waiver would cause hardship and adversely affect the purposes of the Act. The waiver of the limitations on pre-agreement costs at 24 CFR 570.200 (h) will permit the reimbursement of local funds, for the Messiah Baptist Project, a 129 unit-housing complex, with FY 1995 and 1996 CDBG funds.

24. Regulation: 24 CFR 570.200(h) & 570.200 (a)(5).

Project/Activity: Suffolk County, New York requested a waiver of 24 CFR 570.200(h) & 570.200(a)(5) regarding reimbursement of pre-agreement costs to permit the Town of Riverhead to proceed with the acquisition, demolition and clearance of vacant, abandoned, and deteriorated properties and complete construction of a parking lot as part of its Main Street revitalization project.

Nature of Requirement: Under the regulations a locality is precluded from obligating CDBG funds before grant award.

Granted by: Andrew Cuomo, Assistant Secretary for Community Planning & Development.

Date Granted: March 16, 1995.

Reasons Waived: HUD determined that failure to grant the waiver would cause hardship and adversely affect the purposes of the Act. The waiver of the limitations on pre-agreement costs at 24 CFR 570.200(h) & 570.200(a)(5) will permit the reimbursement of local funds, for the Main Street revitalization project, which serves a low- and moderate-income area, with FY 1995, FY 1996, FY 1997, FY 1998 and FY 1999 CDBG funds.

25. Regulation: 24 CFR 570.200(h) & 570.200 (a)(5).

Project/Activity: Wayne County, Michigan requested a waiver of 24 CFR 570.200(h) & 570.200(a)(5) regarding reimbursement of pre-agreement costs to permit the City of Melvindale, Michigan to accelerate improvements to a local swimming pool and recreation building in time for the 1995 summer season.

Nature of Requirement: Under the regulations a locality is precluded from obligating CDBG funds before grant award.

Granted by: Andrew Cuomo, Assistant Secretary for Community Planning & Development.

Date Granted: March 30, 1995.

Reasons Waived: HUD determined that failure to grant the waiver would cause hardship and adversely affect the purposes of the Act. The waiver of the limitations on pre-agreement costs at 24 CFR 570.200(h) & 570.200(a)(5) will permit the reimbursement of local funds, for improvements to a swimming pool and recreation building, which serves a low- and moderate-income area, with FY 1995 CDBG funds.

26. Regulation: 24 CFR 570.207(a)(1).

Project/Activity: The City of Buena Park, California requested a waiver of restrictions on the use of CDBG funds for the repair or reconstruction of buildings for the general conduct of government to permit CDBG funds of be used to repair City Hall buildings.

Nature of Requirement: The Multifamily Housing Property Disposition Reform Act of 1994 (Public Law 103–233) (42 U.S.C 5321) authorized the Secretary to suspend statutory requirements for use of CDBG funds in disaster areas.

Granted by: Andrew Cuomo, Assistant Secretary for Community Planning & Development.

Date Granted: January 12, 1995.

Reasons Waived: It was determined that the City met the requirement of 42 U.S.C. 5321, and hereby suspended the requirements at 42 U.S.C 5305 (a)(2) and 24 CFR 570.207(a)(1) to permit CDBG funds to be used to repair a City Hall.

27. Regulation: 24 CFR 570.606 (c)(3)(v).

Project/Activity: The City of Lawrence, Massachusetts requested a waiver of 24 CFR 570.606 (c)(3)(v) to allow the demolition of building destroyed by fire.

Nature of Requirement: The regulations at 24 CFR 570.606 (c)(3)(v) require one for one replacement of vacant occupiable low and moderate income dwelling units.

Granted by: Andrew Cuomo, Assistant Secretary for Community Planning & Development

Date Granted: January 14, 1995.

Reasons Waived: It was determined that failure to grant a waiver of the regulations at 24 CFR 570.606 (c)(3)(v) would cause undue hardship and adversely affect the purposes of the Act.

28. Regulation: 24 CFR 576.21.

Project/Activity: The State of Wisconsin requested a waiver of the Emergency Shelter Grants regulations at 24 CFR 576.21.

Nature of Requirement: The community requested a waiver of the cap of essential services placed on ESG funds.

Granted by: Andrew Cuomo, Assistant Secretary for Community Planning & Development.

Date Granted: March 27, 1995.

Reasons Waived: Under the Stewart B. McKinney Homeless Assistance Act, amended by the National Affordable Housing Act, the 30 cap percent cap on essential services may be waived if the grantee ''demonstrates that the other eligible activities under the program are already being carried out in the locality with other resources''. The State certified that its own shelters and non-profit shelters have developed sufficient capacity to provide for every family that needs shelter therefore it was determined that the waiver was appropriate.

29. Regulation: 24 CFR 576.21.

Project/Activity: The City of Lancaster, Pennsylvania requested a waiver of the Emergency Shelter Grants regulations at 24 CFR 576.21.

Nature of Requirement: The community requested a waiver of the cap of essential services placed on ESG funds.

Granted by: Andrew Cuomo, Assistant Secretary for Community Planning & Development.

Date Granted: March 30, 1995.

Reasons Waived: Under the Stewart B. McKinney Homeless Assistance Act, amended by the National Affordable Housing Act, the 30 cap percent cap on essential services may be waived if the grantee ''demonstrates that the other eligible activities under the program are already being carried out in the locality with other resources''. The City provided an analysis that demonstrated that other categories of ESG activities will be carried out locally with other resources, therefore, it was determined that the waiver was appropriate.

30. Regulation: 24 CFR 583.150.

Project/Activity: The waiver request is to allow 20 residents of the WINGs Program of the YWCA in Columbus, Ohio, 1988 SHPD Transitional Housing program, to temporarily relocate, for approximately 18 months, to a public housing project.

Nature of Requirement: The regulations at 24 CFR 583.150 state that HUD will not assist a facility with Transitional Housing funds if residents of the structure receive assistance under the United States Housing Act of 1937.

Granted by: Andrew Cuomo, Assistant Secretary for Community Planning & Development.

Date Granted: January 12, 1995.

Reasons Waived: It was determined to be in the best interest of the residents of the transitional housing facility that they relocate to the Taylor Terrace public housing project for 18 months.

31. Regulation: 24 CFR 583.305.

Project/Activity: A non-profit organization received Transitional Housing Demonstration Program funds to convert ten units located at 325 & 331 E. Long Street in Columbus Ohio, into transitional housing.

Nature of Requirement: The regulations require that all recipients receiving assistance for acquisition, rehabilitation or new construction under the Transitional Housing Demonstration Program, must agree to provide transitional housing for a period of 10 years.

Granted by: Andrew Cuomo, Assistant Secretary for Community Planning & Development.

Date Granted: February 16, 1995.

Reasons Waived: The rule allows a grant recipient to obtain a waiver from the requirement to continue to use the structure for transitional housing if it is used for an approved alternative charitable purpose. The recipient intends to use the structure as an emergency shelter for families, therefore, the waiver was approved.

32. Regulation: 24 CFR 882.408(b).

Project/Activity: The City of Cincinnati requested a waiver which would allow the City to utilize a gross rent for one of its Shelter Plus Care projects that would exceed the applicable Fair Market Rent limitation permitted in its agreement with HUD.

Nature of Requirement: The SRO regulations at 24 CFR 882.408(b) state that the initial gross rent for any project must not exceed the moderate rehabilitation FMR applicable to the unit on the date the agreement is executed.

Granted by: Andrew Cuomo, Assistant Secretary for Community Planning & Development.

Date Granted: March 7, 1995.

Reasons Waived: It was determined that the City had taken all reasonable actions to reduce the gross rents to within the applicable FMR. So for project development to proceed the FMR was increased beyond the amount stated in the agreement.

Note to Reader: The person to be contacted for additional information about these waiver-grant items in this listing is: Kevin E. Marchman, Deputy Assistant Secretary, Office of Distresses and Troubled, Housing Recovery, Office of Public and Indian Housing, Department of Housing and Urban Development, 451 Seventh Street, SW., Washington, DC 20410,(202) 401–8812.

33. Regulation: 24 CFR 968.315(b)(2).

Project/Activity: Comprehensive Grant Program, Housing Authority of the City of Atlanta (HACA).

Nature of Requirement: Requires a public housing authority (PHA) to submit an appeal, in writing, of its formula amount if it determines that ''unique circumstances'' exist that justify an adjustment to its formula amount. Also, requires HUD to publish in the **Federal Register** a description of facts supporting any successful appeal based upon ''unique circumstances''.

Granted by: Joseph Shuldiner, Assistant Secretary for Public and Indian Housing.

Date Granted: August 15, 1994 (Funds were provided on January 17, 1995 from the FFY 1995 appropriations).

Reason Waived: The HACA basis for its appeal was the fact that construction costs in the Atlanta area increased by approximately 15 percent due to the massive amount of construction associated with the pending 1996 Summer Olympic Games. Also, the HACA anticipated extensive costs related to problems with soil contamination at its Herndon Homes public housing development. Therefore, $4 million for the HACA on the basis of unique circumstances was approved as follows: $3 million because the cost of construction in the Atlanta area increased very rapidly because of the Summer Olympic Games and the HACA was unable to complete necessary work items within the approved budget; and $1 million for remediation measures associated with the soil contamination at Herndon Homes.

34. Regulation: 24 CFR 970.11(h).

Project/Activity: Public Housing Demolition/Disposition, Project Number IL 2–27 and 2–54, Chicago Housing Authority (CHA).

Nature of Requirement: Requires public housing authorities (PHA) to have a site and neighborhood standards assessment completed by the Department of the site selected for replacement housing.

Granted By: Joseph Shuldiner, Assistant Secretary for Public and Indian Housing.

Date Granted: September 1, 1994.

Reason Waived: The waiver allows the PHA to delay the completion of the site and neighborhood standards assessment until the appropriate time required under the public housing development program. Therefore, the requirement will still be met but not at the time the PHA is applying for approval of a demolition or disposition action. This policy is the same as the new policy contained in a final regulation on demolition/disposition which at the time of the waiver had been approved by OMB and was awaiting approval by the Secretary. Subsequently, the final regulation was published in the **Federal Register** on January 18, 1995, and became effective on February 17, 1995.

35. Regulation: 24 CFR 970.11(h).

Project/Activity: Public Housing Demolition/Disposition, Project Number PA 26–P002–010, Philadelphia Housing Authority (PHA).

Nature of Requirement: Requires public housing authorities (PHA) to have a site and neighborhood standards assessment completed by the Department of the site selected for replacement housing.

Granted By: Joseph Shuldiner, Assistant Secretary for Public and Indian Housing.

Date Granted: September 13, 1994.

Reason Waived: The waiver allows the PHA to delay the completion of the site and neighborhood standards assessment until the appropriate time required under the public housing development program. Therefore, the requirement will still be met but not at the time the PHA is applying for approval of a demolition or disposition action. This policy is the same as the new policy contained in a final regulation on demolition/disposition which at the time of the waiver had been approved by OMB and was awaiting approval by the Secretary. Subsequently, the final regulation was published in the **Federal Register** on January 18, 1995, and became effective on February 17, 1995.

36. Regulation: 24 CFR 970.11(h).

Project/Activity: Public Housing Demolition/Disposition, Project Number TX21–P005–006, Housing Authority of the City of Houston, (HACH).

Nature of Requirement: Requires public housing authorities (PHA) to have a site and neighborhood standards assessment completed by the Department of the site selected for replacement housing.

Granted by: Joseph Shuldiner, Assistant Secretary for Public and Indian Housing

Date Granted: September 26, 1994.

Reason Waived: The waiver allows the PHA to delay the completion of the site and neighborhood standards assessment until the appropriate time required under the public housing development program. Therefore, the requirement will still be met but not at the time the PHA is applying for approval of a demolition or disposition action. This policy is the same as the new policy contained in a final regulation on demolition/disposition which at the time of the waiver had been approved by OMB and was awaiting approval by the Secretary. Subsequently, the final regulation was published in the **Federal Register** on January 18, 1995, and became effective on February 17, 1995.

37. Regulation: 24 CFR 970.11(h).

Project/Activity: Public Housing Demolition/Disposition, Project Number DC1–01, Department of Public and Assisted Housing (DPAH).

Nature of Requirement: Requires public housing authorities (PHA) to have a site and neighborhood standards assessment completed by the Department of the site selected for replacement housing.

Granted by: Joseph Shuldiner, Assistant Secretary for Public and Indian Housing

Date Granted: November 30, 1994.

Reason Waived: The waiver allows the PHA to delay the completion of the site and neighborhood standards assessment until the appropriate time required under the public housing development program. Therefore, the requirement will still be met but not at the time the PHA is applying for approval of a demolition or disposition action. This policy is the same as the new policy contained in a final regulation on demolition/disposition which at the time of the waiver had been approved by OMB and was awaiting approval by the Secretary. Subsequently, the final regulation was published in the **Federal Register** on January 18, 1995, and became effective on February 17, 1995.

38. Regulation: 24 CFR 970.11(h).

Project/Activity: Public Housing Demolition/Disposition, Project Number MI1–034, Detroit Housing Department (HD) .

Nature of Requirement: Requires public housing authorities (PHA) to have a site and neighborhood standards assessment completed by the Department of the site selected for replacement housing.

Granted by: Joseph Shuldiner, Assistant Secretary for Public and Indian Housing.

Date Granted: December 8, 1994.

Reason Waived: The waiver allows the PHA to delay the completion of the site and neighborhood standards assessment until the appropriate time required under the public housing development program. Therefore, the requirement will still be met but not at the time the PHA is applying for approval of a demolition or disposition action. This policy is the same as the new policy contained in a final regulation on demolition/disposition which at the time of the waiver had been approved by OMB and was awaiting approval by the Secretary. Subsequently, the final regulation was published in the **Federal Register** on January 18, 1995, and became effective on February 17, 1995.

39. Regulation: 24 CFR 970.11(h).

Project/Activity: Public Housing Demolition/Disposition, Project Number MI1–034, Detroit Housing Department (DHD FL 5–53B, Dade County Housing Authority (DCHA)).

Nature of Requirement: Requires public housing authorities (PHA) to have a site and neighborhood standards assessment completed by the Department of the site selected for replacement housing.

Granted by: Joseph Shuldiner, Assistant Secretary for Public and Indian Housing.

Date Granted: December 12, 1994.

Reason Waived: The waiver allows the PHA to delay the completion of the site and neighborhood standards assessment until the appropriate time required under the public housing development program. Therefore, the requirement will still be met but not at the time the PHA is applying for approval of a demolition or disposition action. This policy is the same as the new policy contained in a final regulation on demolition/disposition which at the time of the waiver had been approved by OMB and was awaiting approval by the Secretary. Subsequently, the final regulation was published in the Federal Register on January 18, 1995, and became effective on February 17, 1995.

40. Regulation: 24 CFR 970.11(h).

Project/Activity: Public Housing Demolition/Disposition, Project Number IL2–20, Chicago Housing Authority (CHA).

Nature of Requirement: Requires public housing authorities (PHA) to have a site and neighborhood standards assessment completed by the Department of the site selected for replacement housing.

Granted by: Joseph Shuldiner, Assistant Secretary for Public and Indian Housing.

Date Granted: December 20, 1994.

Reason Waived: The waiver allows the PHA to delay the completion of the site and neighborhood standards assessment until the appropriate time required under the public housing development program. Therefore, the requirement will still be met but not at the time the PHA is applying for approval of a demolition or disposition action. This policy is the same as the new policy contained in a final regulation on demolition/disposition which at the time of the waiver had been approved by OMB and was awaiting approval by the Secretary. Subsequently, the final regulation was published in the Federal Register on January 18, 1995, and became effective on February 17, 1995.

[FR Doc. 95–16334 Filed 7–3–95; 8:45 am]

BILLING CODE 4210–32–P

DEPARTMENT OF THE INTERIOR

Bureau of Land Management

[AK–963–1410–00–P, and F–14830–A]

Alaska Native Claims Selection

In accordance with Departmental regulation 43 CFR 2650.7(d), notice is hereby given that a decision to issue conveyance under the provisions of Sec. 14(a) of the Alaska Native Claims Settlement Act of December 18, 1971, 43 U.S.C. 1601, 1613(a), will be issued to Nerklikmute Native Corporation for 8,204.45 acres. The lands involved are in the vicinity of Andreafsky, Alaska, and are located within T. 21 N., Rs. 75 and 76 W., Seward Meridian, Alaska.

A notice of the decision will be published once a week, for four (4) consecutive weeks, in the Tundra Drums. Copies of the decision may be obtained by contacting the Alaska State Office of the Bureau of Land Management, 222 West Seventh Avenue, #13, Anchorage, Alaska 99513–7599 ((907) 271–5960).

Any party claiming a property interest which is adversely affected by the decision, an agency of the Federal government or regional corporation, shall have until August 4, 1995 to file an appeal. However, parties receiving service by certified mail shall have 30 days from the date of receipt to file an appeal. Appeals must be filed in the Bureau of Land Management at the address identified above, where the requirements for filing an appeal may be obtained. Parties who do not file an appeal in accordance with the requirements of 43 CFR Part 4, Subpart E, shall be deemed to have waived their rights.

Heather A. Coats,

Land Law Examiner, Branch of Southwest Adjudication.

[FR Doc. 95–16397 Filed 7–3–95; 8:45 am]

BILLING CODE 4310–JA–P

[UT–05–942–5700–00]

Proposed Plan Amendment; Virgin River Management Framework Plan

AGENCY: Bureau of Land Management, Interior.

ACTION: Notice of availability.

SUMMARY: This notice is to advise the public that the proposed planning amendment and associated environmental assessment for the Virgin River Management Framework Plan, Dixie Resource Area, Cedar City District, have been completed. The proposed decision provides for the classification of 248.58 acres of public land as suitable for Recreation and Public Purposes. The following described lands would be affected:

Salt Lake Meridian

T. 42 S., R. 14 W.,
Sec. 3, lots 6, 7, 9–11, 18, and 20.

DATES: Protests should be received by August 4, 1995.

ADDRESSES: Protests should be sent to the Director, Bureau of Land Management (760), MS 406 LS, 1849 C Street, NW, Washington D.C. 20240.

FOR FURTHER INFORMATION CONTACT: Randy Massey, Realty Specialist, Dixie Resource Area, Bureau of Land Management, 345 E. Riverside Drive, St. George, Utah 84770, (801) 673–4654 ext. 274.

SUPPLEMENTARY INFORMATION: This plan amendment is necessary because the lands identified are not currently identified for disposal in the existing Virgin River Management Framework Plan. The proposed plan amendment would allow Washington County to lease 248.58 acres of land, under the Recreation and Public Purposes Act, for use as a fairground, race track, and associated facilities. Once development is completed, the land could be conveyed to the County. There were no significant impacts identified in the

environmental assessment that would preclude this action.

This action is announced pursuant to section 206 of the Federal Land Policy and Management Act of 1976 and 43 CFR part 1610. The proposed planning amendment is subject to protest from any adversely affected party who previously participated in this planning process. Protests must be made in accordance with the provisions of 43 CFR 1610.5–2. and contain the following information;

—Name, address, telephone number and interest
—Issue or issues being protested
—Part of amendment being protested
—Copy of all relevant documents filed during planning process or indication of date when issues were discussed for the record
—Explanation of why State Director's proposed decision is wrong.

G. William Lamb,

Associate State Director.

[FR Doc. 95–16466 Filed 7–3–95; 8:45 am]

BILLING CODE 4310–DQ–P

National Park Service

Notice of Availability of General Management Plan/Development Concept Plan/Final Environmental Impact Statement, Obed National Wild and Scenic River, Tennessee

SUMMARY: Pursuant to Council on Environmental Quality Regulations and National Park Service policy, the National Park Service announces the release of the General Management Plan/Development Concept Plan/Final Environmental Impact Statement (GMP/DCP/FEIS) for Obed National Wild and Scenic River, Tennessee.

DATES: The GMP/DCP/FEIS will be available until August 14, 1995. Any comments must be postmarked no later than August 14, 1995, and addressed to the Superintendent, Obed National Wild and Scenic River, at the address below.

FOR FURTHER INFORMATION CONTACT: Superintendent, Obed National Wild and Scenic River, P.O. Box 429, Wartburg, Tennessee 37887, Telephone: (615) 346–6294.

SUPPLEMENTARY INFORMATION: The GMP/DCP/FEIS presents two alternatives for future management and use of this unit of the National Park System. The draft plan went on public review in December 1994. This final plan incorporates comments received.

Copies of the GMP/DCP/FEIS are available at the Wartburg office and at the Southeast Field Area Office of the National Park Service, 75 Spring Street, SW, Atlanta, Georgia, 30303. A limited number of copies may be obtained from the Superintendent at the above address.

Frank Catroppa,

Acting Field Director, Southeast Area.

[FR Doc. 95–16408 Filed 7–3–95; 8:45 am]

BILLING CODE 4310–70–M

Jean Lafitte National Historical Park and Preserve; Meeting

AGENCY: National Park Service, Interior.

ACTION: Notice of meeting.

SUMMARY: Notice is hereby given in accordance with the Federal Advisory Committee Act that a meeting of the Delta Region Preservation Commission will be held at 7 p.m. at the following location and date.

DATE: July 26, 1995.

LOCATION: University of New Orleans, University Center, Room 211B, Lakefront, New Orleans, Louisiana 70140.

FOR FURTHER INFORMATION CONTACT: Mr. Robert Belous, Superintendent, Jean Lafitte National Historical Park and Preserve, 365 Canal Street, Suite 3080, New Orleans, Louisiana 70130–1142, (504) 589–3882, extension 108.

SUPPLEMENTARY INFORMATION: The Delta Region Preservation Commission was established pursuant to Section 907 of Public Law 95–625 (16 U.S.C. 230f), as amended, to advise the Secretary of the Interior in the selection of sites for inclusion in Jean Lafitte National Historical Park and Preserve, and in the implementation and development of a general management plan and of a comprehensive interpretive program of the natural, historic, and cultural resources of the Region.

The matters to be discussed at this meeting include:

—Old Business
—New Business
—New Discussion of Interpretive Material
—General Park Update

The meeting will be open to the public. However, facilities and space for accommodating members of the public are limited, and persons will be accommodated on a first-come-first-served basis. Any member of the public may file a written statement concerning matters to be discussed with the Superintendent, Jean Lafitte National Historical Park and Preserve.

Minutes of the meeting will be available for public inspection four weeks after the meeting at the office of Jean Lafitte National Historical Park and Preserve.

Dated: June 21, 1995.

Frank Catroppa,

Acting Field Director, Southeast Area.

[FR Doc. 95–16338 Filed 7–3–95; 8:45 am]

BILLING CODE 4310–70–M

Notice of Intent to Repatriate Native American Items in the Possession of the Hood Museum of Art, Dartmouth College, Hanover, NH

AGENCY: National Park Service, Interior

ACTION: Notice

Notice is hereby given in accordance with provisions of the Native American Graves Protection and Repatriation Act of 1990 (25 U.S.C. 3001 *et seq.*) of the intent to repatriate cultural items that are currently in the possession of the Hood Museum of Art at Dartmouth College, Hanover, NH, and meet the definition of ''sacred object'' and ''object of cultural patrimony'' under 25 U.S.C. 3001.

Two items are covered by this notice. The first item, identified by the catalog number 46.17.10084 is a 22 cm. long, hand carved wooden cylinder with a shouldered conical point. Tied under the shoulder with a white cotton cord are three brown and white feathers with some red pigment added. At about the mid-point of the cylinder are five large brown and white feathers, a miniature red bow and two red arrows, two small shells, five small white downy feathers, three small blue feathers, and a circular wooden rim webbed with white cord.

The second item, 46.17.10085, is similar to the first but differs in some of the specific details. The wooden cylinder is 44 cms long, has a shouldered tip, and there are four downy feathers and two small blue ones attached at the mid-point.

Both items were collected in 1903 at the Zuni Pueblo by Frank and Clara Churchill. Frank Churchill was a Special Federal Inspector of Indian Schools who bequeathed his collection to Dartmouth College in 1946.

After reviewing the written and photographic documentation provided by the museum, the Zuni Cultural Advisory Team, made up of traditional religious leaders, identified both items as prayer sticks. The Team determined that the items described above are culturally affiliated with the Zuni Tribe and they are to be associated with the Ahayu:da or Twin Gods. The Team indicated that if they are not in their rightful shrine home on the Zuni Reservation, they have been illegally removed. Pursuant to 25 U.S.C. 3005 the Governor of the Pueblo of Zuni, on

behalf of the religious leaders and Tribal Council, has formally requested the repatriation of the two prayer sticks described above.

Based on the above mentioned information, officials of the Hood Museum have determined that, pursuant to 25 U.S.C. 3001 (2), there is a relationship of shared group identity which can be reasonably traced between the prayer sticks and the Pueblo of Zuni. Officials of the Hood Museum have also determined that the prayer sticks meet the definition of sacred object pursuant to 25 U.S.C. 3001 (3)(C). The Hood Museum of Art has no objection to this request.

Authorities of the United States Fish and Wildlife Service have been contacted regarding applicability of Federal endangered species statutes to this transfer and have concurred in the conclusion that the objects are not covered due to their age.

This notice has been sent to officials of the Pueblo of Zuni. Representatives of any other Indian tribe that believes itself to be culturally affiliated with these prayer sticks should contact Kellen G. Haak, Registrar and Repatriation Coordinator, Hood Museum of Art, Dartmouth College, Hanover, NH 03755, telephone (603) 646–3109 before [*thirty days after the publication date of this notice in the* **FEDERAL REGISTER**]. Repatriation of these prayer sticks to the Pueblo of Zuni may begin after that date if no additional claimants come forward.

Dated: June 29, 1995

Veletta Canouts

Acting Departmental Consulting Archeologist and

Acting Chief, Archeological Assistance Division

[FR Doc. 95–16402 Filed 7–3–95; 8:45 am]

BILLING CODE 4310–70–F

National Register of Historic Places; Notification of Pending Nominations

Nominations for the following properties being considered for listing in the National Register were received by the National Park Service before June 24, 1995. Pursuant to section 60.13 of 36 CFR Part 60 written comments concerning the significance of these properties under the National Register criteria for evaluation may be forwarded to the National Register, National Park Service, P.O. Box 37127, Washington, D.C. 20013–7127. Written comments should be submitted by July 20, 1995.

Carol D. Shull,

Keeper of the National Register.

CONNECTICUT

Fairfield County

Hebrew Congregation of Woodmont, (Historic Synagogues of Connecticut MPS), 15 and 17 Edgefield Ave., Milford, 95000860

Hartford County

Masonic Temple, (Historic Synagogues of Connecticut MPS), 265 W. Main St., New Britain, 95000864

New London County

Anshel Israel Synagogue, (Historic Synagogues of Connecticut MPS), 142 Newent Rd. (CT 138), Lisbon, 95000861

Tolland County

Knesseth Israel Synagogue, (Historic Synagogues of Connecticut MPS), 236 Pinney St., Ellington, 95000862

GEORGIA

Cobb County

Frobel—Knight—Borders House, 1001 Allgood Rd., Marietta, 95000901,

Fulton County

College Street School, 580 College St., Hapeville, 95000902

IOWA

Boone County

Barkley, Alonzo J. and Flora, House, 326 Boone St., Boone, 95000857

Pottawattamie County, Chicago, Rock Island & Pacific Railroad Passenger Depot, 1512 S. Main St., Council Bluffs, 95000856

KANSAS

Wilson County

Brown Hotel, 523 Main St., Neodesha, 95000863

LOUISIANA

Washington Parish

Babington, Thomas M., House, 828 Main St., Franklinton, 95000899

MICHIGAN

Allegan County

Douglas Union School, 130 Center St., Douglas, 95000870

Berrien County

Edwards, Rock S., Farmstead, 3503 Edwards Rd., Sodus Township, Sodus vicinity, 95000868

Ingham County

Union Depot, 637 E. Michigan Ave., Lansing, 95000869

Kalamazoo County

Henderson Park—West Main Hill Historic District, Roughly bounded by W. Main, Thompson, Academy, Monroe, W. Lovell and Valley Sts. and Prairie Ave., Kalamazoo, 95000871

Menominee County

St. John the Baptist Catholic Church, 904 11th Ave., Menominee, 95000865

St. Clair County

Colony Tower Complex (Boundary Increase), 6503 Dyke Rd. (MI 29), Clay Township, Pearl Beach, 95000876,

St. Joseph County

Wahbememe Burial Site and Monument, Jct. of US 12 and US 131, Mottville Township, White Pigeon vicinity, 95000867

Wayne County

Ford Valve Plant, 235 E. Main St., Northville, 95000866

MISSOURI

Carroll County

Carroll County Court House, Courthouse Sq., Carrollton, 95000858

Henry County

Haysler, Gustave C., House, 301 S. Second St., Clinton, 95000859

MONTANA

Sweet Grass County

St. Mark's Episcopal Church, W. Fourth Ave., Big Timber, 95000900

NEW YORK

Delaware County

St. John's Church Complex, 136 Main St., Delhi, 95000879

Oswego County

Hunter—Oliphant Block, 215—219 W. First St., Oswego, 95000880

OHIO

Hamilton County

Race Street Historic District, Roughly, along Race, W. 6th and W. 7th Sts. and Shillito Pl., Cincinnati, 95000878

PENNSYLVANIA

Bucks County

Churchville Historic District, Roughly, along Bristol Rd., Bustleton Pike and Cornell and Knowles Aves., Northampton and Upper Southampton Townships, Churchville, 95000887

Cambria County

Portage Historic District, Roughly bounded by N. Railroad Ave., Prospect St., Johnson Ave. and Vine St., Portage Township, Portage, 95000890

Chester County

Waterloo Mills Historic District, 815, 840, 855 and 860 Waterloo Rd., Easttown Township, Waterloo Mills, 95000889

Fayette County

Whitsett Historic District (Bituminous Coal and Coke Resources of Pennsylvania MPS), Roughly bounded by the Youghiogheny R., the former Elwell Branch of the Pittsburgh

& Lake Erie RR tracks and Elwell Run, Whitsett, 95000883

Franklin County

Wilson College, 1015 Philadelphia Ave., Chambersburg, 95000888

Huntingdon County

Oyer, Christian, Jr., House, Township Rd. 513, Barree Township, Huntingdon vicinity, 95000882

Lancaster County

Brown's, George, Sons Cotton and Woolen Mill, 324—360 E. Main St., Mount Joy, 95000881

Washington County

Martin Farmstead, PA 136, 2 mi. W of town of Eighty-Four, South Strabane Township, Washington vicinity, 95000886

Pennsylvania Railroad Freight Station, 111 Washington St., Washington, 95000891

Westmoreland County

Greensburg Downtown Historic District, Roughly bounded by Tunnel St., Main St., Third St. and Harrison Ave., Greensburg, 95000884

Walter, John, Farmstead, 166 Mamont Dr., Washington Township, Export, 95000885

VIRGINIA

Alleghany County

Longdale Furnace Historic District, Roughly, along Longdale Furnace Rd., Iron Ore Ln., Church Rd. and Conner Ln., Clifton Forge vicinity, 95000898

Franklin County

Hook—Powell—Moorman Farm, Jct. of VA 122 and VA 950, Hales Ford, 95000893

Mecklenburg County

Long Grass, VA 826, Eppes Fork vicinity, 95000894

Smyth County

Hotel Lincoln, 107 E. Main St., Marion, 95000897

Danville Independent City

Danville Municipal Building, 418 Patton St., Danville (Independent City), 95000896

Danville Southern Railway Passenger Depot, 701 Craghead St., Danville (Independent City), 95000895

WEST VIRGINIA

Marion County

Jacobs—Hutchinson Block, 201—209 Adams St., Fairmont, 95000874

Mercer County

Bramwell Additions Historic District (Boundary Increase), Along Bluestone Ave. SW of US 92, also two discontiguous areas N and W along the Bluestone R., Bramwell, 95000877

Monongalia County

Kincaid and Arnett Feed and Flour Building, 156 Clay St., Morgantown, 95000873

Monroe County

Campbell, Clarence, House, WV 3, Union, 95000872

Ohio County

Fischer—Lasch Farmhouse, 100 Waddles Run Rd., Wheeling, 95000875

[FR Doc. 95–16328 Filed 7–3–95; 8:45 am]

BILLING CODE 4310–70–P

INTERSTATE COMMERCE COMMISSION

[Finance Docket No. 32709]

Chicago and North Western Railway Company—Trackage Rights Exemption—The Fox Valley Western Ltd.

The Fox Valley Western Ltd. (FVW) has agreed to grant overhead trackage rights to the Chicago and North Western Railway Company (CNW) over approximately 1 mile of rail line between milepost 1 and the beginning of ownership of the FVW Duck Creek, CNW milepost 0.0, in Brown County, WI. The trackage rights will facilitate economical and efficient interchange with FVW and the Wisconsin Central Limited at Green Bay, WI. The trackage rights were to become effective on July 1, 1995.

This notice is filed under 49 CFR 1180.2(d)(7). If the notice contains false or misleading information, the exemption is void *ab initio.* Petitions to revoke the exemption under 49 U.S.C. 10505(d) may be filed at any time. The filing of a petition to revoke will not stay the transaction. Pleadings must be filed with the Commission and served on: Stuart F. Gassner, Chicago and North Western Railway Company, 165 North Canal Street, Chicago, IL 60606–1551.

As a condition to the use of this exemption, any employees adversely affected by the trackage rights will be protected under *Norfolk and Western Ry. Co.—Trackage Rights—BN,* 354 I.C.C. 605 (1978), as modified in *Mendocino Coast Ry., Inc.—Lease and Operate,* 360 I.C.C. 653 (1980).

Decided: June 22, 1995.

By the Commission, David M. Konschnik, Director, Office of Proceedings.

Vernon A. Williams,

Secretary.

[FR Doc. 95–16401 Filed 7–3–95; 8:45 am]

BILLING CODE 7035–01–P

[Finance Docket No. 32530]

Kansas City Southern Railway Company—Construction and Operation Exemption—Geismar Industrial Area Near Gonzales and Sorrento, LA

AGENCY: Interstate Commerce Commission.

ACTION: Notice of conditional exemption.

SUMMARY: Under 49 U.S.C. 10505, the Interstate Commerce Commission conditionally exempts from the prior approval requirements of 49 U.S.C. 10901 the construction and operation by Kansas City Southern Railway Company (KCS) of approximately 9 miles of track beginning at milepost 814 and running northwesterly to the Geismar industrial area near Gonzales and Sorrento, in Ascension Parish, LA. The proposed construction and operation is to include yard storage space contiguous to the Geismar complex and is to connect with the industrial track and facilities of three major shippers. The conditional grant of the exemption is subject to our further consideration of the anticipated environmental impacts of the proposal. The exemption does not constitute authority to cross the track of Illinois Central Railroad Company (IC). If KCS and IC cannot agree on the proposed crossing, KCS may petition for crossing authority under 49 U.S.C. 10901(d)(1). In the event that crossing authority is sought and authorized and the parties are unable to agree on terms of operation or compensation, these matter may be submitted to the Commission for resolution.

DATES: The exemption will not become effective until the environmental process is completed. At that time, a further decision will be issued addressing the environmental matters and, if appropriate, establishing an exemption effective date. Petitions to reopen must be filed by July 25, 1995.

ADDRESSES: Send pleadings referring to Finance Docket No. 32530 to: (1) Office of the Secretary, Case Control Branch, Interstate Commerce Commission, 1201 Constitution Avenue, N.W., Washington, DC 20423; and (2) Petitioners' representative: John R. Molm, 601 Pennsylvania Avenue, N.W., North Building, Suite 640, Washington D.C. 20004.

FOR FURTHER INFORMATION CONTACT: Beryl Gordon, (202) 927–5610. [TDD for the hearing impaired: (202) 927–5721.]

SUPPLEMENTARY INFORMATION: Additional information is contained in the Commission's decision. To purchase a copy of the full decision, write to, call,

or pick up in person from: Dynamic Concepts, Inc., Interstate Commerce Commission Building, 1201 Constitution Avenue, N.W., Room 2229, Washington, DC 20423. Telephone: (202) 289–4357/4359. [Assistance for the hearing impaired is available through TDD services (202) 927–5721.]

Decided: June 27, 1995.

By the Commission, Chairman Morgan, Vice Chairman Owen, and Commissioners Simmons and McDonald.

Vernon A. Williams,

Secretary.

[FR Doc. 95–16435 Filed 7–3–95; 8:45 am]

BILLING CODE 7035–01–P

[Finance Docket No. 32571]

Missouri Pacific Railroad Company—Construction and Operation Exemption—Harris and Chambers Counties, TX

AGENCY: Interstate Commerce Commission.

ACTION: Notice of conditional exemption.

SUMMARY: Under 49 U.S.C. 10505, the Interstate Commerce Commission conditionally exempts, from the prior approval requirements of 49 U.S.C. 10901, the construction and operation by Missouri Pacific Railroad Company (MP) of approximately 10.5 miles of rail line between the point of connection with its Baytown Subdivision at milepost 25.0 near McNair and the manufacturing facilities of Exxon Chemical Americas, Chevron Chemical Company, and Amoco Chemical Company at or near Mont Belvieu, in Harris and Chambers Counties, TX. The proposed construction and operation is to provide direct service by MP to the involved facilities, which are currently served directly only by Southern Pacific Lines. MP and Union Pacific Railroad Company are class I rail carrier affiliates in the Union Pacific System, providing single-line service in the United States generally west of the Mississippi River.

DATES: The exemption will not become effective until the environmental process is completed. At that time, a further decision will be issued addressing the environmental matters and establishing an exemption effective date, if appropriate. Petitions to reopen must be filed by July 25, 1995.

ADDRESSES: Send pleadings referring to Finance Docket No. 32571 to: (1) Office of the Secretary, Case Control Branch, Interstate Commerce Commission, 1201 Constitution Avenue, N.W., Washington, DC 20423; and (2) Petitioner's representative: S. William Livingston, Jr., 1201 Pennsylvania Avenue, N.W., P.O. Box 7566, Washington, DC 20044–7566.

FOR FURTHER INFORMATION CONTACT: Joseph H. Dettmar, (202) 927–5660. [TDD for the hearing impaired: (202) 927–5721.]

SUPPLEMENTARY INFORMATION: Additional information is contained in the Commission's decision. To purchase a copy of the full decision, write to, call, or pick up in person from: Dynamic Concepts, Inc., Interstate Commerce Commission Building, 1201 Constitution Avenue, N.W., Room 2229, Washington, DC 20423. Telephone (202) 289–4357/4359. [Assistance for the hearing impaired is available through TDD services (202) 927–5721.]

Decided: June 27, 1995.

By the Commission, Chairman Morgan, Vice Chairman Owen, and Commissioners Simmons and McDonald.

Vernon A. Williams,

Secretary.

[FR Doc. 95–16434 Filed 7–3–95; 8:45 am]

BILLING CODE 7035–01–P

DEPARTMENT OF JUSTICE

Drug Enforcement Administration

[DEA No. 132F]

1995 Revised Aggregate Production Quotas for Controlled Substances in Schedules I and II

AGENCY: Drug Enforcement Administration (DEA), Justice.

ACTION: Notice of final revised aggregate production quotas for 1995.

SUMMARY: This notice establishes revised 1995 aggregate production quotas for controlled substances in Schedules I and II of the Controlled Substances Act (CSA).

DATES: This order is effective on July 5, 1995.

FOR FURTHER INFORMATION CONTACT: Howard McClain, Jr., Chief, Drug and Chemical Evaluation Section, Drug Enforcement Administration, Washington, D.C. 20537, Telephone: (202) 307–7183.

SUPPLEMENTARY INFORMATION: Section 306 of the CSA (21 U.S.C. 826) requires the Attorney General to establish aggregate production quotas for controlled substances in Schedules I and II each year. This responsibility has been delegated to the Administrator of the DEA pursuant to Section 0.100 of Title 28 of the Code of Federal Regulations. The Administrator, in turn, has redelegated this function to the Deputy Administrator of the DEA pursuant to Section 0.104 of Title 28 of the Code of Federal Regulations.

On May 9, 1995, a notice of the proposed revised 1995 aggregate production quotas for controlled substances in Schedules I and II was published in the **Federal Register** (60 FR 24649). All interested parties were invited to comment on or object to these proposed aggregate production quotas on or before June 9, 1995.

Several companies commented that the revised 1995 aggregate production quotas for amphetamine, diphenoxylate, fentanyl, hydrocodone, hydromorphone, methadone, methadone intermediate (for conversion), methylphenidate, morphine and oxycodone (for sale), were insufficient to provide for the estimated medical, scientific, research and industrial needs of the United States, for export requirements and for the establishment and maintenance of reserve stocks.

The DEA has reviewed the involved companies' 1994 year-end inventories, their initial 1995 manufacturing quotas, 1995 export requirements and their actual and projected 1995 sales. Based on this data, the DEA has adjusted the revised 1995 aggregate production quotas for amphetamine, diphenoxylate, fentanyl, hydromorphone, methadone, methadone intermediate (for conversion), morphine and oxycodone (for sale) to meet the estimated medical, scientific, research and industrial needs of the United States.

Regarding hydrocodone and methylphenidate, the DEA has decided that no adjustments are necessary to meet the 1995 estimated medical, scientific, research and industrial needs of the United States.

The Office of Management and Budget has determined that notices of aggregate production quotas are not subject to centralized review under Executive Order 12866. This action has been analyzed in accordance with the principles and criteria contained in Executive Order 12612, and it has been determined that this matter does not have sufficient Federalism implications to warrant the preparation of a Federalism Assessment.

The Deputy Administrator hereby certifies that this action will have no significant impact upon small entities whose interests must be considered under the Regulatory Flexibility Act, 5 U.S.C. 601, et seq. The establishment of aggregate production quotas for Schedules I and II controlled substances is mandated by law and by international treaty obligations. While aggregate production quotas are of primary importance to large manufacturers, their

impact upon small entities is neither negative nor beneficial. Accordingly, the Deputy Administrator has determined that this action does not required a regulatory flexibility analysis.

Therefore, under the authority vested in the Attorney General by Section 306 of the Controlled Substances Act of 1970 (21 U.S.C. 826), delegated to the Administrator by Section 0.100 of Title 28 of the Code of Federal Regulations, and redelegated to the Deputy Administrator of the DEA by Section 0.104 of Title 28 of the Code of Federal Regulations, the Deputy Administrator hereby orders that the 1995 revised aggregate production quotas, expressed in grams of anhydrous acid or base, be established as follows:

Basic class	Established revised 1995 quotas
Schedule I:	
Acetylmethadol	7
Alphacetylmethadol	5
Aminorex	7
Bufotenine	10
Cathinone	9
Difenoxin	14,000
Dihydromorphine	5
2,5-Dimethoxyamphetamine	15,650,000
Dimethoxyamphetamine	7
Ethylamine analog of Phencyclidine	5
N-Ethylamphetamine	9
Lysergic acid diethylamide	56
Mescaline	7
Methaqualone	7
Methcathinone	14
4-Methoxyamphetamine	17
4-Methylaminorex	2
3,4-Methylenedioxyamphetamine	17
3,4-Methylenedioxy-N-ethylamphetamine	27
3,4-Methylenedioxymethamphetamine	17
3-Methylfentanyl	14
Normethadone	5
Normorphine	7
Tetrahydrocannabinols	35,000
Thiophene Analog of Phencyclidine	10
Schedule II:	
Alfentanil	7,000
Amobarbital	15
Amphetamine	1,226,000
Cocaine	550,000
Codeine (for sale)	67,312,000
Codeine (for conversion)	16,181,000
Desoxyephedrine	1,154,000
(1,138,000 grams of levo-desoxyephedrine for use in a non-controlled, non-prescription product and 16,000 grams for methamphetamine)	
Dextropropoxyphene	124,012,000
Dihydrocodeine	100,000
Diphenoxylate	965,000
Ecogonine (for conversion)	650,000
Ethylmorphine	10
Fentanyl	114,200
Hydrocodone	8,474,000
Hydromorphone	435,500
Isomethadone	10
Levo-alpha-acetylmethadol	200,000
Levorphanol	8,000
Meperidine	9,521,000
Methadone	4,388,000
Methadone (for conv)	364,000
Methadone Intermediate (for sale)	0
Methadone Int. (for conv)	5,533,000
Methylphenidate	10,410,000
Morphine (for sale)	11,145,000
Morphine (for conv)	78,105,000
Noroxymorphone (for sale)	21,000
Noroxymorphone (for conv)	3,500,000
Opium	1,304,000
Oxycodone (for sale)	4,794,000
Oxycodone (for conv)	25,500
Oxymorphone	10,200
Pentobarbital	15,706,000

Basic class	Established revised 1995 quotas
Phencyclidine	72
Phenylacetone (for conv)	3,528,000
1-Phenylcyclohexylamine	10
1-Piperidinocyclohexanecarbonitrile	10
Secobarbital	322,000
Sufentanil	1,600
Thebaine	9,383,000

Dated: June 26, 1995.

Stephen H. Greene,

Deputy Administrator.

[FR Doc. 95–16321 Filed 7–3–95; 8:45 am]

BILLING CODE 4410–09–M

National Institute of Corrections

Cooperative Agreement Award

AGENCY: National Institute of Corrections, Justice.

ACTION: Notice.

SUMMARY: This notice is to provide information to the public concerning a planned cooperative agreement award from the National Institute of Corrections, Department of Justice to Policy Research, Inc. (PRI) to establish a center to improve knowledge and services related to improving mechanisms for the acquisition and application of high quality knowledge about individuals in contact with the criminal justice system dually diagnosed with mental illness and substance abuse in order to improve the full range of interventions possible, including sanctioning practices, management/supervision strategies, and treatment of dually diagnosed substance abuse and mental illness with these individuals. This is not a formal request for applications.

DATES: The deadline for submission of the application is 4 p.m., E.S.T., August 4, 1995.

ADDRESSES: The application is to be submitted in original with 6 copies to the National Institute of Corrections, Attention Mr. George Keiser, Chief, Division of Community Corrections, National Institute of Corrections, 500 First Street N.W., Washington D.C. 20534.

FOR FURTHER INFORMATION CONTACT: Mr. George Keiser, 202–307–3995, ext. 135.

SUPPLEMENTARY INFORMATION: Authority: This cooperative agreement award will be made under authority of NIC's statutory authorities as set forth in Title 18 of the U.S. Code at 4351–4352. The cooperative agreement mechanism is being employed to fund this activity, because it is NIC's intent to be actively involved and to provide support for a public purpose which requires highly specialized expertise and a unique set of collaborative alliances to reach the projects's goals. This cooperative agreement is not subject to review as governed by Executive Order 12372, Intergovernmental Review of Federal Programs.

Availability of Funds

Approximately $906,000 will be available in Fiscal Year 1995 to fund this project for the first of 3 years. It is expected that the project will begin on or about September 15, 1995 and based on funding availability and first year results, additional funding is anticipated for up to 2 subsequent years.

The National Institute of Corrections will administer the cooperative agreement and will coordinate with program officials of the Substance Abuse and Mental Health Services' Center for Substance Abuse Treatment and the Center for Mental Health Services in the management, oversight, and evaluation of project activities.

Purpose

Research has shown a high degree of dual diagnosis or co-morbidity of addictive and mental disorders (up to 80%) among offender populations resulting in a need to establish an integrated network for knowledge development, analyses of state-of-the-art practices, and knowledge application and technical assistance related to techniques for appropriately intervening, managing/supervising and treating persons in the criminal justice system who are dually diagnosed with substance abuse and mental illness. There is a need to establish an expert knowledge and practice base through the creation of a center that serves as a resource to enhanced collaboration among mental health, substance abuse treatment, and criminal justice professionals, consumers, family members, and State and local officials.

This project will increase the ability to effectively acquire, adapt, and apply existing knowledge and practice that will result in system change and improved mental health and substance abuse interventions, outcomes and management with dually diagnosed individuals in contact with the criminal justice system.

Through a cooperative agreement with a detailed strategic plan that (1) builds upon and augments the work already accomplished with the earlier jail population initiative of NIC and CMHS and (2) addresses how additional correction system target populations are to be reached over the lifetime of the award, the project through the creation of a center will address the following goals:

Goal 1: Create a commitment and common understanding regarding the need to share responsibility for the treatment, care, and management/supervision of dually diagnosed individuals who have contact across the Criminal Justice System, as well as the Mental Health Care System, and the Substance Abuse Treatment System.

Goal 2: Across all 3 systems, decrease stigmatization of those individuals with dual diagnosis of substance abuse and mental illness.

Goal 3: Increase individual jurisdictions' abilities to appropriately intervene and use of a range of graduated sanctions, with individuals dually diagnosed with substance abuse and mental illness.

Goal 4: Develop knowledge application strategies and opportunities to improve the treatment and management/supervision of substance abuse and mental illness of dually diagnosed offenders by promoting system change within each and across all three systems.

Objectives

Specifically, PRI will prepare an application for a center that will include cost, timeframes, and anticipated outcomes to:

—Consolidate, synthesize and assess promising research and program evaluation information identifying promising practices ready for dissemination and knowledge application to a wide range of

audiences, to include female adult and juvenile offenders, violent offenders and those at risk for violence, offenders from racial/ethnic minority groups, and offenders who are *chronically* mentally ill.

—Provide technical assistance regarding the development and implementation of populations specific, e.g. gender-specific and racial/ethnic specific, treatment guidelines for dually diagnosed offenders regardless of offense and length and type of sanctioning, e.g. ranging from individuals in pre-trial status to those with long prison terms. Provide information and analyses relevant to the inclusion of these populations in approaches to the provision of ''managed care.''

—Identify the most appropriate audiences suitable for technical assistance, including the judicial system, and match these audiences to the most effective and efficient means of technical assistance, including knowledge application and marketing strategies. Describe how the relative effectiveness of various forms of such technical assistance, knowledge application, and marketing will be assessed.

—Describe how the 3 systems in question will be addressed through the center and how the project will build incrementally on the legal status (based on court dispositions) of offender populations.

—Create networks and examine and evaluate different modes of structure and organization of these networks of policy makers, researchers, mental health, substance abuse and corrections providers and administrators, consumers, family members, advocacy organizations, and public/private organizations to assist in accomplishing the systems change goals of this project as well as participating in technical assistance and knowledge application activities.

—Identify and assist key organizations to meet shared goals related to the interventions, sanctioning, treatment, and management/supervision of offenders, e.g. issues of family access and family participation to offenders with mental illness of concern to the National Alliance for the Mentally Ill.

—Provide technical assistance to relevant systems officials regarding the availability of services for offenders dually diagnosed with substance abuse and mental illness in the community and in jails and prisons. Strategize with relevant officials on how to stabilize and maintain the chronic dually diagnosed offender in community settings, especially when minor offenses have been committed. Explore more diversion and sanctioning options for the non-violent dually diagnosed offender.

—Increase the awareness and use of a range or continuum of interventions, including sanctions, assuring appropriate matching of services to the specifics of the population. Increase the use of screening and assessment processes to identify and help place the dually diagnosed within the corrections system. Provide technical assistance in developing common (across jurisdictions, States, counties) screening and assessment instruments. Provide technical assistance to improve the classification system for dually diagnosed offenders. Assist in identifying and developing more effective and reliable instruments that allow for non-detention options while awaiting adjudication. Increase the ability of the offender to fulfill obligations related to legal violations.

—Identify the need for new research, evaluation, and data-base building and assess and identify voids and gaps in knowledge and subsequently recommend research, evaluation and data-base building needed to expand the knowledge base on how to treat and manage the full spectrum of dually diagnosed offenders in all components of the criminal justice system, including community corrections, jails, and prisons.

Evaluation of Project

The awardee is required to evaluate the center established through this project to assure consistency with stated goals, objectives, strategic plans, and timeframes as well as to determine the outcome and impact of this project on improved sanctioning practices, treatment for dually diagnosed substance abuse and mental illness, and management of the dually diagnosed offender.

Reasons for Selecting Policy Research, Inc. as Recipient of this Cooperative Agreement Award

Policy Research, Inc. is the non-profit arm of Policy Research Associates (PRA), research firm committed to the application of rigorous social science research methods to policy issues at the Federal, State, and local levels. The delivery of technical assistance and the application of new research to pressing service and organizational issues have been major foci of PRA activities since its inception.

PRA has been recognized nationally and internationally as a leader in research and its applications in the areas of mental health and substance abuse services in the criminal justice system, violence and mental disorders and mental health services for persons who are homeless. Its national leadership in bringing together other researchers, service providers, administrators, advocates, and key political leaders in these areas to focus on issues of extreme national importance is well documented.

This unique capacity and long-term commitment to the issues that are at the core of the project and this capacity exists in no other single organization: private or public, research firm or university. Because PRA does so much cutting-edge policy analysis, it understands the practicalities of interpreting and applying research to foster program development and systemic change, an essential ingredient for this project to succeed. PRA drafted the report required by Congress in Public Law 102–321, section 703 requiring '' a report concerning the most effective methods for providing mental health services to individuals who come into contact with the criminal justice system. . .and the obstacles to providing such services.'' PRA drafted this report and conducted a series of meetings that brought together key constituent groups for their input. PRA has supported a range of technical assistance activities in assisting the National Institute of Corrections Jail Division's evaluation of its jail mental health technical assistance center, preparing a brochure on the current research summarizing data on mental disorder and violence and conducting a workshop to develop model contracts between jails and mental health service providers.

Evaluation Criteria

NIC routinely uses four categories of criteria in reviewing applications for financial assistance. They are programmatic, organizational, project management, and financial/administrative. A description of the general elements that compose these criteria categories follows:

Programmatic—Indication of a clear understanding of the problem to be addressed, the key issues underlying the problem area, and the relevance of the proposed project, well defined project objectives, and resources necessary to meet the objectives; potential for NIC's using the results of the project in other undertakings or programs.

Organizational—Background, experience and expertise of the

proposed project staff, including any proposed consultants; and sufficient realistic time commitments from key project staff.

Project Management—Description of all elements and tasks of the project, and realistic timeframes necessary to complete the tasks; technical soundness of the design and methodology for achieving the project goals; identification of realistic process of ensuring achievement of tasks and milestones; provisions for adequate evaluation of the effectiveness of the project.

Financial/Administrative—financial and administrative integrity of the proposal, including adherence to Federal financial guidelines and processes; adequate project cost detail/narrative to support the proposed budget; reasonableness of estimated cost in relation to the anticipated results.

Executive Order 12372

Not subject to review.

Catalog of Federal Domestic Assistance Number: The Catalog of Federal Domestic Assistance Number applicable to this program is 16.602

Application Process

Policy Research, Inc. is to submit an application using OMB Standard Form 424, Application For Federal Assistance, including as appropriate required certifications and assurances (e.g. drug-free workplace, debarment, lobbying activities, etc.) The original application must bear the original ink-signature of the president or chief executive officer of PRI.)

A budget must be part of the application and composed of a narrative description linking costs to projected tasks, outcomes, and time frames, as well as a summary projection of costs/prices by major categories such as personnel, benefits, travel, supplies, equipment, and indirect costs.

Dated: June 28, 1995.

Morris L. Thigpen,

Director, National Institute of Corrections.

[FR Doc. 95–16357 Filed 7–3–95; 8:45 am]

BILLING CODE 4410–36–P

NUCLEAR REGULATORY COMMISSION

[Docket No. 50–440]

The Cleveland Electric Illuminating Company, et al., Perry Nuclear Power Plant, Unit No. 1; Notice of Issuance of Amendment to Facility Operating License

The U.S. Nuclear Regulatory Commission (the Commission) has issued Amendment No. 69 to Facility Operating License No. NPF–58 issued to the Cleveland Electric Illuminating Company, Centerior Service Company, Duquesne Light Company, Ohio Edison Company, Pennsylvania Power Company, and Toledo Edison Company for operation of the Perry Nuclear Power Plant (PNPP), Unit No. 1, located in Lake County, Ohio. The amendment is effective as of the date of issuance.

The amendment modified the Technical Specifications (TS) by replacing the existing TS in their entirety with a new set of TS based on NUREG–1434, ''Improved BWR–6 Technical Specifications,'' dated September 1992. This amendment was based on the licensee's submittal of December 16, 1993, and supplemented by letters dated November 7, 1994, May 5 and May 18, 1995.

The application for the amendment complies with the standards and requirements of the Atomic Energy Act of 1954, as amended (the Act), and the Commission's rules and regulations. The Commission has made appropriate findings as required by the Act and the Commission's rules and regulations in 10 CFR Chapter I, which are set forth in the license amendment.

Notice of Consideration of Issuance of Amendment and Opportunity for Hearing in connection with this action was published in the **Federal Register** on April 14, 1994 (59 FR 17799). No request for a hearing or petition for leave to intervene was filed following this notice.

The Commission has prepared an Environmental Assessment related to the action and has determined not to prepare an environmental impact statement. Based upon the environmental assessment, the Commission has concluded that the issuance of the amendment will not have a significant effect on the quality of the human environment (60 FR 2162, dated January 6, 1995).

For further details with respect to the action see (1) the application for amendment dated December 16, 1993, and supplemented by letters dated November 7, 1994, May 5 and May 18, 1995, (2) Amendment No. 69 to License No. NPF–58, (3) the Commission's related Safety Evaluation, and (4) the Commission's Environmental Assessment. All of these items are available for public inspection at the Commission's Public Document Room, the Gelman Building, 2120 L Street NW., Washington, DC, and at the local public document room located at the Perry Public Library, 3753 Main Street, Perry, Ohio 44081.

Dated at Rockville, Maryland, this 23rd day of June 1995.

For the Nuclear Regulatory Commission.

Jon B. Hopkins, Sr.,

Project Manager, Project Directorate III–3, Division of Reactor Projects III/IV, Office of Nuclear Reactor Regulation.

[FR Doc. 95–16368 Filed 7–3–95; 8:45 am]

BILLING CODE 7590–01–M

[Docket Nos. 50–254 and 50–265]

Order Approving Transfer of License and Notice of Consideration of Proposed Issuance of Associated Amendment, Proposed No Significant Hazards Consideration Determination, and Opportunity for a Hearing

In the Matter of: Commonwealth Edison Company, Iowa-Illinois Gas and Electric Company (Quad Cities Nuclear Power Station, Units 1 and 2).

I

Iowa-Illinois Gas and Electric Company (IIGEC) is holder of 25 percent ownership in Quad Cities Nuclear Power Station, Units 1 and 2. Commonwealth Edison Company (ComEd) owns the remaining 75 percent share of the facility. IIGEC and ComEd are governed by Facility Operating License Nos. DPR–29 and DPR–30 issued by the U.S. Atomic Energy Commission (AEC) pursuant to part 50 of title 10 of the Code of Federal Regulations (10 CFR part 50) on December 14, 1972. Under these licenses, only ComEd, acting as agent and representative of the two owners listed on the licenses, has the authority to operate the Quad Cities Nuclear Power Station, Units 1 and 2. The Quad Cities station is located in rock Island County, Illinois.

II

By letter dated November 21, 1994, IIGEC informed the Commission that MidAmerican Energy Company (MidAmerican) will become the surviving corporation and public utility of a proposed merger between IIGEC, MidAmerican, Midwest Resources, Inc., and Midwest Power Systems, Inc. This merger would result in the transfer of IIGEC's 25 percent ownership share in

Quad Cities Nuclear Power Station, Units 1 and 2, to MidAmerican. The current stockholders of IIGEC and Midwest Resources, Inc. will become stockholders of MidAmerican when the merger takes effect. IIGEC requested the Commission's approval of the transfer of the ownership interest it now holds, pursuant to 10 CFR 50.80. Notice of this request for approval was published in the **Federal Register** on January 10, 1995 (60 FR 2615).

The transfer of Facility Operating License Nos. DPR–29 and DPR–30 is subject to the NPR's approval under 10 CFR 50.80(a). Upon review of information submitted in the letter of November 21, 1994, and other information before the Commission, the NRC staff has determined that MidAmerican will be an electric utility as defined in 10 CFR 50.2 and, consequently, as provided in 10 CFR 50.33(f), is not required to provide information on financial qualifications for a license to operate. The NRC staff concludes that MidAmerican is qualified to hold the licenses to the extent and for the purposes that IIGEC is now authorized to hold the licenses, and that the transfer, subject to the conditions set forth herein, is otherwise consistent with applicable provisions of law, regulations, and orders issued by the Commission. These findings are supported by a Safety Evaluation dated June 20,1995.

III

By August 4, 1995, any person adversely affected by this Order may file a request for a hearing with respect to issuance of the Order. Any person requesting a hearing shall set forth with particularity how that interest is adversely affected by this Order and shall address the criteria set forth in 10 CFR 2.714(d), in the same manner as is more fully discussed below regarding requests for hearing and petitions for leave to intervene in connection with proposed license amendments.

If a hearing is to be held, the Commission will issue an Order designating the time and place of such hearing.

If a hearing is held concerning this Order, the issue to be considered at any such hearing shall be whether this Order should be sustained.

Any request for a hearing must be filed with the Secretary of the Commission, U.S. Nuclear Regulatory Commission, Washington, DC 20555, Attention: Docketing and Services Branch, or may be delivered to the Commission's Public Document Room, the Gelman Building, 2120 L Street, NW., Washington, DC, by the above date. Copies should also be sent to the Office of the General Counsel, and to the Director, Office of Nuclear Reactor Regulation, U.S. Nuclear Regulatory Commission, Washington, DC 20555, and to Michael I. Miller, Esquire, Sidley and Austin, One First National Plaza, Chicago, Illinois 60603, attorney for ComEd, and Sam Behrends, Esquire, LeBoeuf, Lamb, Greene & MacRae, 1875 Connecticut Avenue, NW., Washington, DC 2009–5728, attorney for IIGEC.

IV

Accordingly, pursuant to sections 161b, 161i, and 184 of the Atomic Energy Act of 1954, as amended, 42 U.S.C. 2201(b), 2201(i), 2234, and 10 CFR 50.80, IT IS HEREBY ORDERED that the Commission consents to the proposed transfer of the licenses described herein from IIGEC to MidAmerican subject to the following: (1) Approved amendments describing MidAmerican as part owner of Quad Cities Nuclear Power Station, Units 1 and 2, for Facility Operating License Nos. DPR–29 and DPR–30, which when issued by the NRC, would become effective as of the date of issuance; (2) should the transfer not be completed by August 30, 1995, this Order shall become null and void; and (3) on application and for good cause shown, this Order may be extended for a short period beyond August 30, 1995.

This Order is effective upon issuance.

V

Notice is hereby given that the Commission is considering the issuance of amendments to the licenses described herein to reflect the above transfer approved by the Commission. IIGEC stated in a letter dated November 21, 1994, again as stated by ComEd in their letter dated February 23, 1995, that the amendments are administrative in nature only because (1) IIGEC holds a minority interest (25 percent) in the facility, (2) ComEd is the sole operator of the facility, and (3) MidAmerican, as successor in interest to IIGEC, will be committed under the Ownership Agreement and the Operating Agreement to provide funds necessary on a pro-rata basis for the safe operation, maintenance, repair, decontamination, and decommissioning of the Quad Cities station in conformance with NRC regulations, subject to the same obligations, terms, and conditions that apply to IIGEC under the licenses. IIGEC further stated that MidAmerican's ability to fund these costs will be equal to, or greater than, that of IIGEC.

Before issuance of the proposed license amendments, the Commission will have made findings required by the Atomic Energy Act of 1954, as amended (the Act) and the Commission's regulations.

The Commission has made a proposed determination that the proposed amendments involve no significant hazards consideration. Under the Commission's regulations in 10 CFR 50.92, operation of the facility in accordance with the proposed amendments would not (1) involve a significant increase in the probability or consequences of an accident previously evaluated; or (2) create the possibility of a new or different kind of accident from any accident previously evaluated; or (3) involve a significant reduction in a margin of safety. As required by 10 CFR 50.91(a), ComEd has provided its analysis of the issue of no significant hazards consideration. According to the licensee, the proposed amendments would not:

1. Involve a significant increase in the probability or consequences of an accident previously evaluated because:

The proposed changes are purely administrative in nature, and as such do not affect any accident precursors or initiators. Therefore, the proposed changes do not increase the probability of any previously evaluated accident. Similarly, the proposed changes do not affect any equipment or procedures used to mitigate the consequences of an accident.

2. Create the possibility of a new or different kind of accident from any accident previously evaluated because:

The proposed changes are administrative in nature and therefore have no effect on the accident analyses or system operation. Therefore, the possibility of a new or different kind of accident is not created.

3. Involve a significant reduction in the margin of safety because:

The proposed changes do not involve a relaxation of the criteria used to establish safety limits, a relaxation of the bases for limiting safety system settings, or a relaxation of the bases for limiting conditions of operation. The proposed changes are administrative in nature without consequence to the safety of the plant. Therefore, the proposed changes do not impact the margin of safety.

The NRC staff has reviewed the licensee's analysis and, based on this review, it appears that the three standards of 10 CFR 50.92(c) are satisfied. Therefore, the NRC staff proposes to determine that the amendment request involves no significant hazards consideration.

The Commission is seeking public comments on this proposed determination. Any comments received within 30 days after the date of publication of this notice will be considered in making any final determination.

Normally, the Commission will not issue the amendments until the expiration of the 30-day notice period. However, should circumstances change during the notice period such that failure to act in a timely way would result, for example, in derating or shutdown of the facility, the Commission may issue the license amendments before the expiration of the 30-day notice period, provided that its final determination is that the amendments involve no significant hazards consideration. The final determination will consider all public and State comments received. Should the Commission take this action, it will publish in the **Federal Register** a notice of issuance and provide for an opportunity for a hearing after issuance. The Commission expects that the need to take this action will occur very infrequently.

Written comments may be submitted by mail to the Rules Review and Directives Branch, Division of Freedom of Information and Publications Services, Office of Administration, U.S. Nuclear Regulatory Commission, Washington, DC 20555, and should cite the publication date and page number of this **Federal Register** notice. Written comments may also be delivered to Room 6D22, Two White Flint North, 11545 Rockville Pike, Rockville, Maryland, from 7:30 a.m. to 4:15 p.m. Federal workdays. Copies of written comments received may be examined at the NRC Public Document Room, the Gelman Building, 2120 L Street, NW., Washington, DC.

The filing of requests for hearing and petitions for leave to intervene is discussed below.

By August 4, 1995, any person whose interest may be affected by the issuance of the amendments to the subject facility operating licenses and who wishes to participate as a party must file a written request for a hearing and a petition for leave to intervene. Requests for a hearing and a petition for leave to intervene shall be filed in accordance with the Commission's ''Rules of Practice for Domestic Licensing Proceedings'' in 10 CFR Part 2. Interested persons should consult a current copy of 10 CFR 2.714, which is available at the Commission's Public Document Room, the Gelman Building, 2120 L Street, NW., Washington, DC, and at the local public document room located at the Dixon Public Library, 221 Hennepin Avenue, Dixon, Illinois. If a request for a hearing or a petition for leave to intervene is filed by the above date, the Commission or an Atomic Safety and Licensing Board, designated by the Commission or by the Chairman of the Atomic Safety and Licensing Board Panel, will rule on the request and/or petition; and the Secretary or the designated Atomic Safety and Licensing Board will issue a notice of hearing or an appropriate order.

As required by 10 CFR 2.714, a petition for leave to intervene shall set forth with particularity the interest of the petitioner in the proceeding and how that interest may be affected by the results of the proceeding. The petition should specifically explain the reasons why intervention should be permitted with particular reference to the following factors: (1) The nature of the petitioner's right under the Act to be made party to the proceeding; (2) the nature and extent of the petitioner's property, financial, or other interest in the proceeding; and (3) the possible effect of any order which may be entered in the proceeding on the petitioner's interest. The petition should also identify the specific aspect(s) of the subject matter of the proceeding as to which the petitioner wishes to intervene. Any person who has filed a petition for leave to intervene or who has been admitted as a party may amend the petition without requesting leave of the Board up to 15 days prior to the first prehearing conference scheduled in the proceeding, but such an amended petition must satisfy the specificity requirements described above.

Not later than 15 days prior to the first prehearing conference scheduled in the proceeding, a petitioner shall file a supplement to the petition to intervene, which must include a list of the contentions which are sought to be litigated in the matter. Each contention must consist of a specific statement of the issue of law or fact to be raised or controverted. In addition, the petitioner shall provide a brief explanation of the bases of the contention and a concise statement of the alleged facts or expert opinion which support the contention and on which the petitioner intends to rely in proving the contention at the hearing. The petitioner must also provide references to those specific sources and documents of which the petitioner is aware and on which the petitioner intends to rely to establish those facts or expert opinion. The Petitioner must provide sufficient information to show that a genuine dispute exists with the applicant for the amendments on a material issue of law or fact. Contentions shall be limited to matters within the scope of the amendments under consideration. The contention must be one which, if proven, would entitle the petitioner to relief. A petitioner who fails to file such a supplement which satisfies these requirements with respect to at least one contention will not be permitted to participate as a party.

Those permitted to intervene become parties to the proceeding, subject to any limitations in the Order granting leave to intervene, and have the opportunity to participate fully in the conduct of the hearing, including the opportunity to present evidence and cross-examine witnesses.

If a hearing is requested, the Commission will make a final determination on the issue of no significant hazards consideration. The final determination will serve to decide when the hearing is held.

If the final determination is that the amendment request involves no significant hazards consideration, the Commission may issue the amendments and make them immediately effective, notwithstanding the request for a hearing. Any hearing held would take place after issuance of the amendments.

If the final determination is that the amendment request involves a significant hazards consideration, any hearing held would take place before the issuance of any amendment.

A request for a hearing or a petition for leave to intervene must be filed with the Secretary of the Commission, U.S. Nuclear Regulatory Commission, Washington, DC 20555, Attention: Docketing and Services Branch, or may be delivered to the Commission's Public Document Room, the Gelman Building, 2120 L Street NW., Washington, DC, by the above date. Where petitions are filed during the last 10 days of the notice period, it is requested that the petitioner promptly so inform the Commission by a toll-free telephone call to Western Union at 1–(800) 248–5100 (in Missouri 1–(800) 342–6700). The Western Union operator should be given Datagram Identification Number N1023 and the following message addressed to Mr. Robert A. Capra: petitioner's name and telephone number, date petition was mailed, plant name, and publication date and page number of this **Federal Register** notice. A copy of the petition should also be sent to the Office of the General Counsel, U.S. Nuclear Regulatory Commission, Washington, DC 20555, and to Michael I. Miller, Esquire, Sidley and Austin, One First National Plaza, Chicago, IL 60603, attorney for ComEd, and Sam Behrends, Esquire, LeBoeuf, Lamb, Greene & MacRae, 1875 Connecticut Avenue NW., Washington, DC 20009–5728, attorney for IIGEC.

Nontimely filings of petitions for leave to intervene, amended petitions, supplemental petitions and/or requests for hearing will not be entertained

absent a determination by the Commission, the presiding officer or the presiding Atomic Safety and Licensing Board that the petition and/or request should be granted based upon a balancing of the factors specified in 10 CFR 2.714(a)(1) (i)–(v) and 2.714(d).

Pursuant to 10 CFR 51.21, 51.32 and 51.35, an environmental assessment and finding of no significant impact has been prepared and published in the **Federal Register** on March 27, 1995 (60 FR 15799).

Accordingly, based upon the environmental assessment, the Commission has determined that the issuance of these amendments will not have a significant effect on the quality of the human environment.

For further details with respect to this action, see the application for the transfer of licenses dated November 21, 1994, and the application for amendments dated February 23, 1995, which are available for public inspection at the Commission's Public Document Room, the Gelman Building, 2120 L Street NW., Washington, DC, and at the local public document room located at the Dixon Public Library, 221 Hennepin Avenue, Dixon, IL.

Dated at Rockville, Maryland, this 28th day of June 1995.

For the Nuclear Regulatory Commission.

William T. Russell,

Director, Office of Nuclear Reactor Regulation.

[FR Doc. 95–16369 Filed 7–3–95; 8:45 am]

BILLING CODE 7590–01–M

[IA 95–022]

In the Matter of: Marc W. Zuverink, Holland, Michigan; Order Prohibiting Involvement in NRC-Licensed Activities and Requiring Certain Notification to NRC

I

Cammenga Associates, Inc. (Cammenga or Licensee) holds Byproduct Material License No. 21–26460–01 issued by the U.S. Nuclear Regulatory Commission (NRC or Commission) pursuant to 10 CFR Part 30 on September 27, 1993. The license authorizes the use of byproduct material, hydrogen-3 (tritium), in sealed vials for the production of tritium radioluminescent devices. The license is due to expire on January 31, 1998. From July 29, 1994, to September 16, 1994, Marc W. Zuverink was contracted to Cammenga through a temporary hiring service.

II

The Licensee trained Mr. Zuverink as a radiation worker. The training included a discussion of potential sanctions against employees who misused, mishandled, or stole radioactive material. Mr. Zuverink's answers on a comprehensive written exam given by the Licensee indicate that he was aware of potential civil and criminal penalties for employees who deliberately violate federal regulations or license requirements governing the use of tritium. The radiation safety training allowed Mr. Zuverink to enter the Licensee's restricted area and to have access to licensed material as part of the process of manufacturing tritium illuminated compasses under contract to the United States military.

III

On September 30, 1994, the Licensee undertook an inventory of NRC-licensed material in its possession. Upon completion, the inventory determined that 1099 vials, containing a total of 49.11 curies of tritium, were missing. The Licensee notified the NRC and the Ottawa County, Michigan, Sheriff's Department. An inspection was conducted by NRC Region III personnel on October 7 and 8, 1994, to evaluate the radiological consequences of the missing material and to monitor the retrieval of the tritium sources. Investigations were conducted by the NRC Office of Investigations (OI), the Ottawa County Sheriff's Department, and the Department of Defense Criminal Investigation Service.

Mr. Zuverink admitted to the investigators that he took tritium vials and completed compasses with tritium inserts from the Licensee on more than one occasion. The largest theft apparently took place on September 10, 1994, when he took nine bags of vials from the Licensee, each bag containing 100 vials of tritium, 50 millicuries per vial. Mr. Zuverink stated that he gave the tritium vials and compasses to various members of the public, including approximately 100 vials (5,000 millicuries) to a teenage skateboarder whom he did not know. Mr. Zuverink also admitted that he crushed a tritium vial on a kitchen table at his home in the presence of another individual. This action contaminated the tabletop and caused the other individual to receive a minor tritium uptake (internal tritium contamination). Minor contamination of a countertop and tables was also found in a restaurant where Mr. Zuverink had given one or more vials to another member of the public. Mr. Zuverink was able to arrange for the return of 548 tritium vials, leaving 551 vials unaccounted for (401 vials at 50 millicuries, 57 vials at 25 millicuries, and 93 vials at 5 millicuries).

OI also found that Mr. Zuverink made false statements to an OI investigator and an NRC inspector during an interview on October 7, 1994. During that interview, Mr. Zuverink stated that he never had any tritium vials at his home, had given tritium vials to only two individuals, and had stolen only one compass. These statements were contradicted by Mr. Zuverink's sworn testimony on October 17, 1994.

Mr. Zuverink's acquisition, possession and transfer of NRC-licensed material, tritium, is a deliberate violation of 10 CFR 30.3, ''Activities requiring license.'' 10 CFR 30.3 requires that no person shall manufacture, produce, transfer, receive, acquire, own, possess, or use byproduct material except as authorized in a specific or general license. Mr. Zuverink was not authorized in a specific or general license to acquire, possess or transfer byproduct material, including tritium.

Pursuant to a plea arrangement dated February 3, 1995, Mr. Zuverink agreed to plead guilty in the U.S. District Court for the Western District of Michigan to one criminal count of violating 18 U.S.C. 641, a misdemeanor. Specifically, the agreement describes the charge as stealing compasses, containing the radioactive substance tritium, which belonged to the United States and which were manufactured under contract for the United States. As a result, on April 18, 1995, a judgment was entered whereby Mr. Zuverink was sentenced to serve one year in federal custody, pay a fine of $500, make restitution to Cammenga in the amount of $1,000, and pay a $25 special assessment to the court.

IV

Based on the above, the NRC concludes that Marc W. Zuverink engaged in deliberate misconduct that constituted a violation of 10 CFR 30.3 when he stole and transferred NRC-licensed material. The NRC must be able to rely on its licensees, and the employees of licensees and licensee contractors, to comply with NRC requirements, including the requirement that licensed material cannot be acquired, possessed or distributed without a specific or general license. The deliberate violation of 10 CFR 30.3 by Marc W. Zuverink, as discussed above, has raised serious doubt as to whether he can be relied on to comply with NRC requirements.

Consequently, I lack the requisite assurance that Marc W. Zuverink will conduct licensed activities in compliance with the Commission's requirements or that the health and safety of the public will be protected if Marc W. Zuverink were permitted at this time to be involved in NRC-licensed activities. Therefore, the public health, safety and interest require that for a period of ten years from the date of this Order, Marc W. Zuverink be prohibited from any involvement in NRC-licensed activities for either: (1) An NRC licensee, or (2) an Agreement State licensee performing licensed activities in areas of NRC jurisdiction in accordance with 10 CFR 15.020. In addition, for a period of five years commencing after the ten year period of prohibition, Mr. Zuverink must notify the NRC of his employment or involvement in NRC-licensed activities to ensure that the NRC can monitor the status of Mr. Zuverink's compliance with the Commission's requirements and his understanding of his commitment to compliance.

V

Accordingly, pursuant to sections 81, 1761b, 161i, 182, and 186 of the Atomic Energy Act of 1954, as amended, and the Commission's regulations in 10 CFR 2.202, 10 CFR Part 30, and 10 CFR 150.20, it is hereby ordered that:

1. Marc W. Zuverink is prohibited for a period of ten years from the date of this Order from engaging in NRC-licensed activities. NRC-licensed activities are those activities that are conducted pursuant to a specific or general license issued by the NRC, including, but not limited to, those activities of Agreement State licensees conducted pursuant to the authority granted by 10 CFR 150.20.

2. For a period of five years, after the above ten year period of prohibition has expired, Marc W. Zuverink shall, within 20 days of his acceptance of each employment offer involving NRC-licensed activities or his becoming involved in NRC-licensed activities, as defined in Paragraph V.1 above, provide notice to the Director, Office of Enforcement, U.S. Nuclear Regulatory Commission, Washington, DC 20555, of the name, address, and telephone number of the employer or the entity where he is, or will be, involved in the NRC-licensed activities. In the first such notification, Marc W. Zuverink shall include a statement of his commitment to compliance with regulatory requirements and the basis as to why the Commission should have confidence that he will now comply with applicable NRC requirements.

The Director, Office of Enforcement, may, in writing, relax or rescind any of the above conditions upon demonstration by Mr. Zuverink of good cause.

VI

In accordance with 10 CFR 2.202, Marc W. Zuverink must, and any other person adversely affected by this Order may, submit an answer to this Order, and may request a hearing on this Order, within 45 days of the date of this Order. The answer may consent to this Order. Unless the answer consents to this Order, the answer shall, in writing and under oath or affirmation, specifically admit or deny each allegation or charge made in this Order and shall set forth the matters of fact and law on which Mr. Zuverink or other person adversely affected relies and the reasons as to why the Order should not have been issued. Any answer or request for a hearing shall be submitted to the Secretary, U.S. Nuclear Regulatory Commission, Attn: Chief, Docketing and Service Section, Washington DC 20555. Copies also shall be sent to the Director, Office of Enforcement, U.S. Nuclear Regulatory Commission, Washington, DC 20555, and to the Regional Administrator, NRC Region III, 801 Warrenville Road, Lisle, Illinois 60632–4531, if the answer or hearing request is by a person other than Mr. Zuverink. If a person other than Mr. Zuverink requests a hearing, that person shall set forth with particularity the manner in which his or her interest is adversely affected by the Order and shall address the criteria set forth in 10 CFR 2.714(d).

If a hearing is requested by Mr. Zuverink or a person whose interest is adversely affected, the Commission will issue an Order designating the time and place of any hearing. If a hearing is held, the issue to be considered at such hearing shall be whether this Order should be sustained. Since Mr. Zuverink is currently in Federal custody, if a hearing is requested, the Commission will not act on the hearing request until Mr. Zuverink is released from Federal custody. If Mr. Zuverink requests a hearing, the hearing request will not be granted unless Mr. Zuverink: (1) Notifies the Secretary, U.S. Nuclear Regulatory Commission, at the address given above, within 20 days of his release from Federal custody, that he has been released from Federal custody; and (2) provides in the notice his then-current address where he can be contacted and a statement that he continues to desire the hearing. A copy of the notice shall also be sent to the Director, Office of Enforcement, and the Assistant General Counsel for Hearings and Enforcement, at the address given above.

In the absence of any request for hearing, the provisions specified in Section V above shall be effective and final 45 days from the date of this Order without further order or proceedings. In the event that Mr. Zuverink makes the sole request for a hearing and fails to comply with the notification requirements above, the provisions specified in Section V above shall be effective and final 20 days after he is released from Federal custody.

Dated at Rockville, Maryland this 27th day June 1995.

For the Nuclear Regulatory Commission.

Hugh L. Thompson, Jr.,

Deputy Executive Director for Nuclear Materials Safety, Safeguards and Operations Support.

[FR Doc. 95–16371 Filed 7–3–95; 8:45 am]

BILLING CODE 7590–01–M

Applications and Amendments to Facility Operating Licenses Involving No Significant Hazards Considerations; Biweekly Notice

I. Background

Pursuant to Public Law 97–415, the U.S. Nuclear Regulatory Commission (the Commission or NRC staff) is publishing this regular biweekly notice. Public Law 97–415 revised section 189 of the Atomic Energy Act of 1954, as amended (the Act), to require the Commission to publish notice of any amendments issued, or proposed to be issued, under a new provision of section 189 of the Act. This provision grants the Commission the authority to issue and make immediately effective any amendment to an operating license upon a determination by the Commission that such amendment involves no significant hazards consideration, notwithstanding the pendency before the Commission of a request for a hearing from any person.

This biweekly notice includes all notices of amendments issued, or proposed to be issued from June 10, 1995, through June 22, 1995. The last biweekly notice was published on June 21, 1995 (60 FR 32359).

Notice of Consideration of Issuance of Amendments to Facility Operating Licenses, Proposed No Significant Hazards Consideration Determination, and Opportunity for a Hearing

The Commission has made a proposed determination that the following amendment requests involve no significant hazards consideration.

Under the Commission's regulations in 10 CFR 50.92, this means that operation of the facility in accordance with the proposed amendment would not (1) involve a significant increase in the probability or consequences of an accident previously evaluated; or (2) create the possibility of a new or different kind of accident from any accident previously evaluated; or (3) involve a significant reduction in a margin of safety. The basis for this proposed determination for each amendment request is shown below.

The Commission is seeking public comments on this proposed determination. Any comments received within 30 days after the date of publication of this notice will be considered in making any final determination.

Normally, the Commission will not issue the amendment until the expiration of the 30-day notice period. However, should circumstances change during the notice period such that failure to act in a timely way would result, for example, in derating or shutdown of the facility, the Commission may issue the license amendment before the expiration of the 30-day notice period, provided that its final determination is that the amendment involves no significant hazards consideration. The final determination will consider all public and State comments received before action is taken. Should the Commission take this action, it will publish in the **Federal Register** a notice of issuance and provide for opportunity for a hearing after issuance. The Commission expects that the need to take this action will occur very infrequently.

Written comments may be submitted by mail to the Rules Review and Directives Branch, Division of Freedom of Information and Publications Services, Office of Administration, U.S. Nuclear Regulatory Commission, Washington, DC 20555, and should cite the publication date and page number of this **Federal Register** notice. Written comments may also be delivered to Room 6D22, Two White Flint North, 11545 Rockville Pike, Rockville, Maryland from 7:30 a.m. to 4:15 p.m. Federal workdays. Copies of written comments received may be examined at the NRC Public Document Room, the Gelman Building, 2120 L Street, NW., Washington, DC. The filing of requests for a hearing and petitions for leave to intervene is discussed below.

By August 4, 1995, the licensee may file a request for a hearing with respect to issuance of the amendment to the subject facility operating license and any person whose interest may be affected by this proceeding and who wishes to participate as a party in the proceeding must file a written request for a hearing and a petition for leave to intervene. Requests for a hearing and a petition for leave to intervene shall be filed in accordance with the Commission's ''Rules of Practice for Domestic Licensing Proceedings'' in 10 CFR Part 2. Interested persons should consult a current copy of 10 CFR 2.714 which is available at the Commission's Public Document Room, the Gelman Building, 2120 L Street, NW., Washington, DC and at the local public document room for the particular facility involved. If a request for a hearing or petition for leave to intervene is filed by the above date, the Commission or an Atomic Safety and Licensing Board, designated by the Commission or by the Chairman of the Atomic Safety and Licensing Board Panel, will rule on the request and/or petition; and the Secretary or the designated Atomic Safety and Licensing Board will issue a notice of a hearing or an appropriate order.

As required by 10 CFR 2.714, a petition for leave to intervene shall set forth with particularity the interest of the petitioner in the proceeding, and how that interest may be affected by the results of the proceeding. The petition should specifically explain the reasons why intervention should be permitted with particular reference to the following factors: (1) The nature of the petitioner's right under the Act to be made a party to the proceeding; (2) the nature and extent of the petitioner's property, financial, or other interest in the proceeding; and (3) the possible effect of any order which may be entered in the proceeding on the petitioner's interest. The petition should also identify the specific aspect(s) of the subject matter of the proceeding as to which petitioner wishes to intervene. Any person who has filed a petition for leave to intervene or who has been admitted as a party may amend the petition without requesting leave of the Board up to 15 days prior to the first prehearing conference scheduled in the proceeding, but such an amended petition must satisfy the specificity requirements described above.

Not later than 15 days prior to the first prehearing conference scheduled in the proceeding, a petitioner shall file a supplement to the petition to intervene which must include a list of the contentions which are sought to be litigated in the matter. Each contention must consist of a specific statement of the issue of law or fact to be raised or controverted. In addition, the petitioner shall provide a brief explanation of the bases of the contention and a concise statement of the alleged facts or expert opinion which support the contention and on which the petitioner intends to rely in proving the contention at the hearing. The petitioner must also provide references to those specific sources and documents of which the petitioner is aware and on which the petitioner intends to rely to establish those facts or expert opinion. Petitioner must provide sufficient information to show that a genuine dispute exists with the applicant on a material issue of law or fact. Contentions shall be limited to matters within the scope of the amendment under consideration. The contention must be one which, if proven, would entitle the petitioner to relief. A petitioner who fails to file such a supplement which satisfies these requirements with respect to at least one contention will not be permitted to participate as a party.

Those permitted to intervene become parties to the proceeding, subject to any limitations in the order granting leave to intervene, and have the opportunity to participate fully in the conduct of the hearing, including the opportunity to present evidence and cross-examine witnesses.

If a hearing is requested, the Commission will make a final determination on the issue of no significant hazards consideration. The final determination will serve to decide when the hearing is held.

If the final determination is that the amendment request involves no significant hazards consideration, the Commission may issue the amendment and make it immediately effective, notwithstanding the request for a hearing. Any hearing held would take place after issuance of the amendment.

If the final determination is that the amendment request involves a significant hazards consideration, any hearing held would take place before the issuance of any amendment.

A request for a hearing or a petition for leave to intervene must be filed with the Secretary of the Commission, U.S. Nuclear Regulatory Commission, Washington, DC 20555, Attention: Docketing and Services Branch, or may be delivered to the Commission's Public Document Room, the Gelman Building, 2120 L Street, NW., Washington DC, by the above date. Where petitions are filed during the last 10 days of the notice period, it is requested that the petitioner promptly so inform the Commission by a toll-free telephone call to Western Union at 1-(800) 248–5100 (in Missouri 1-(800) 342–6700). The Western Union operator should be given Datagram Identification Number N1023 and the

following message addressed to (*Project Director*): petitioner's name and telephone number, date petition was mailed, plant name, and publication date and page number of this **Federal Register** notice. A copy of the petition should also be sent to the Office of the General Counsel, U.S. Nuclear Regulatory Commission, Washington, DC 20555, and to the attorney for the licensee.

Nontimely filings of petitions for leave to intervene, amended petitions, supplemental petitions and/or requests for a hearing will not be entertained absent a determination by the Commission, the presiding officer or the Atomic Safety and Licensing Board that the petition and/or request should be granted based upon a balancing of factors specified in 10 CFR 2.714(a)(1)(i)–(v) and 2.714(d).

For further details with respect to this action, see the application for amendment which is available for public inspection at the Commission's Public Document Room, the Gelman Building, 2120 L Street, NW., Washington, DC, and at the local public document room for the particular facility involved.

Arizona Public Service Company, et al., Docket Nos. STN 50–528, STN 50–529, and STN 50–530, Palo Verde Nuclear Generating Station, Unit Nos. 1, 2, and 3, Maricopa County, Arizona

Date of amendment requests: May 2, 1995.

Description of amendment requests: The proposed amendment would remove from the technical specifications (TS) plant elevations for the minimum water volume required in the spent fuel pool (SFP) and relocate them to site procedures. This proposed TS amendment also includes two changes to correct administrative errors in the TS.

Basis for proposed no significant hazards consideration determination: As required by 10 CFR 50.91(a), the licensee has provided its analysis about the issue of no significant hazards consideration, which is presented below:

1. The proposed change does not involve a significant increase in the probability or consequences of an accident previously evaluated.

The proposed change eliminates the plant elevations from TS Figure 3.1–1, ''Minimum Borated Water Volumes'' for the SFP. The change is administrative in nature and does not involve any modifications to plant equipment or affected plant operation. The required volume of water in the SFP is identified on the figure and will remain unchanged by this amendment. This request relocates the plant elevations to site procedures where they will be controlled in accordance with the provisions of 10 CFR 50.59.

The removal of the reference to Table 3.8–2 in the Unit 3 TS 3.8.4.1 and adding the word ''containment'' to the Unit [2] TS 4.6.3.1 are administrative change[s] and do not involve any modifications to plant equipment or affect plant operation. These administrative changes do not affect the scope or intent of any test within the TS.

Therefore, the proposed changes do not involve a significant increase in the probability or consequences of an accident previously evaluated.

2. The proposed change does not create the possibility of a new or different kind of accident from any accident previously evaluated.

The proposed change eliminates the plant elevations from TS Figure 3.1–1, ''Minimum Borated Water Volumes'' for the SFP. The change is administrative in nature and does not involve any modifications to plant equipment or affect plant operation. The removal of plant elevations from the figure does not cause any change in the method by which any safety-related system performs its function. The required volume of water in the SFP is identified on the figure and will remain unchanged by this amendment.

The removal of the reference to Table 3.8–2 in the Unit 3 TS 3.8.4.1 and adding the word ''containment'' to the Unit 2 TS 4.6.3.1 are administrative changes and do not involve any modifications to plant equipment or affect plant operation. These administrative changes do not affect the scope or intent of any test within the TS.

Therefore, the proposed changes do not create the possibility of a new or different kind of accident from any accident previously evaluated.

3. The proposed change does not involve a significant reduction in a margin of safety.

The proposed change eliminates the plant elevations from TS Figure 3.1–1, ''Minimum Borated Water Volumes'' for the SFP. The change is administrative in nature and does not involve any modifications to plant equipment or affect plant operation. The required volume of water in the SFP is identified on the figure and will remain unchanged by this amendment.

The removal of the reference to Table 3.8–2 in the Unit 3 TS 3.8.4.1 and adding the word ''containment'' to the Unit 2 TS 4.6.3.1 are administrative changes and do not involve any modifications to plant equipment or affect plant operation. These administrative changes do not affect the scope or intent of any test within the TS.

Therefore, based upon the above, the proposed change does not involve a significant reduction in a margin of safety.

The NRC staff has reviewed the licensee's analysis and, based on that review, it appears that the three standards of 50.92(c) are satisfied. Therefore, the NRC staff proposes to determine that the amendment requests involve no significant hazards consideration.

Local Public Document Room location: Phoenix Public Library, 12 East McDowell Road, Phoenix, Arizona 85004.

Attorney for licensees: Nancy C. Loftin, Esq., Corporate Secretary and Counsel, Arizona Public Service Company, P.O. Box 53999, Mail Station 9068, Phoenix, Arizona 85072–3999.

NRC Project Director: William H. Bateman.

Baltimore Gas and Electric Company, Docket Nos. 50–317 and 50–318, Calvert Cliffs Nuclear Power Plant, Unit Nos. 1 and 2, Calvert County, Maryland

Date of amendments request: June 2, 1995.

Description of amendments request: The proposed amendments would revise the pressurizer safety valve setpoint tolerance ''as-found'' acceptance criterion to +2%/−1% for the valve with the lower setpoint (RC–200) and plus or minus 2% for the valve with the upper setpoint (RC–201). The ''as-left'' setpoint tolerance will remain plus or minus 1% for both valves.

Basis for proposed no significant hazards consideration determination: As required by 10 CFR 50.91(a), the licensee has provided its analysis of the issue of no significant hazards consideration, which is presented below:

1. Would not involve a significant increase in the probability or consequences of an accident previously evaluated.

The pressurizer safety valves are used to prevent exceeding the Reactor Coolant System (RCS) pressure safety limit. The proposed change to increase the pressurizer safety valve setpoint tolerance for the ''as-found'' acceptance criteria from [plus or minus]1% to +2%/−1% for the valve with the lower pressure setpoint, and [plus or minus] 2% for the valve with the upper pressure setpoint, does not affect any initiating event. The proposed change does not affect the consequences of the previously evaluated design basis accidents as the new safety valve setpoint tolerances are bounded by the assumptions in the safety analysis. Therefore, the proposed change does not involve a significant increase in the probability or consequences of an accident previously evaluated.

2. Would not create the possibility of a new or different type of accident from any accident previously evaluated.

The proposed change to increase the ''as-found'' setpoint tolerances does not involve any changes in equipment or the function of these safety valves. The proposed change does not represent a change in the configuration or operation of the plant. The test method for the pressurizer safety valves will remain the same. The increase in the setpoint tolerances does not create any new accident initiator. Therefore, the proposed change does not create the possibility of a new or different type of accident from any accident previously evaluated.

3. Would not involve a significant reduction in a margin of safety.

The pressure safety limit for the RCS protects the structural integrity of the system from failure due to overpressurization. The pressurizer safety valves are used to prevent the RCS pressure from exceeding the safety limit. The proposed change to the pressurizer safety valve setpoint tolerances will continue to prevent the RCS pressure from exceeding the design safety limit during any design basis event. Therefore, the proposed change does not involve a significant reduction in a margin of safety.

The NRC staff has reviewed the licensee's analysis and, based on this review, it appears that the three standards of 50.92(c) are satisfied. Therefore, the NRC staff proposes to determine that the amendments request involves no significant hazards consideration.

Local Public Document Room location: Calvert County Library, Prince Frederick, Maryland 20678.

Attorney for licensee: Jay E. Silbert, Esquire, Shaw, Pittman, Potts and Trowbridge, 2300 N Street, NW., Washington, DC 20037.

NRC Project Director: Ledyard B. Marsh.

Baltimore Gas and Electric Company, Docket Nos. 50–317 and 50–318, Calvert Cliffs Nuclear Power Plant, Unit Nos. 1 and 2, Calvert County, Maryland

Date of amendments request: June 6, 1995.

Description of amendments request: The proposed amendments would revise the Calvert Cliffs Nuclear Plant Units 1 and 2 Technical Specifications, extending certain 18-month frequency surveillances to a refueling interval (nominally 24 months, not to exceed 30 months). Systems and equipment affected are the Reactor Protective System (RPS), Engineered Safety Features Actuation System (ESFAS), Power-Operated Relief Valve (PORV) actuation instruments, Low Temperature Overpressure Protection (LTOP)-related instruments, Remote Shutdown Panel instruments, Post-Accident Monitoring (PAM) instruments, Containment Sump Level instruments, and Radiation Monitoring instruments.

This amendment request would extend the nominal surveillance interval requirement from 18 months to a refueling interval (nominally 24 months, not to exceed 30 months) for instrument channel calibrations, RPS and ESFAS total bypass function operability verification, RPS and ESFAS time response tests, ESFAS Manual Trip Button channel functional tests, and ESFAS Automatic Actuation Logic Channel Functional Tests. Calvert Cliffs has been operating on a 24-month fuel cycle since July 1987 (Unit 2) and July 1988 (Unit 1), performing some Technical Specification surveillances, such as the ones described here, during mid-cycle outages. The request is the last of a series of proposed license amendments that would eliminate the need for planned mid-cycle outages to perform required surveillances.

Basis for proposed no significant hazards consideration determination: As required by 10 CFR 50.91(a), the licensee has provided its analysis of the issue of no significant hazards consideration, which is presented below:

1. Would not involve a significant increase in the probability or consequences of an accident previously evaluated.

The proposed change would extend surveillance intervals for Reactor Protective System (RPS), Engineered Safety Features Actuation System (ESFAS), Power-Operated Relief Valve (PORV), Low Temperature Overpressure Protection (LTOP), Remote Shutdown, Post-Accident Monitoring (PAM), Radiation Monitoring, and Containment Sump Level Instruments.

The purpose of the RPS is to effect a rapid reactor shutdown if any one or a combination of conditions deviates from a pre-selected operating range. The system functions to protect the core and the Reactor Coolant System pressure boundary. The purpose of the ESFAS is to actuate equipment which protects the public and plant personnel from the accidental release of radioactive fission products if an accident occurs, including a loss-of-coolant incident, main steam line break, or loss of feedwater incident. The safety features function to localize, control mitigate, and terminate such incidents in order to minimize radiation exposure to the general public. The Post-Accident Monitoring instruments provide the Control Room operators with primary information necessary to take manual actions, as necessary, in response to design basis events, and to verify proper system response to plant conditions and operator actions. The purpose of the Remote Shutdown System is to provide plant parameter indications to operators on a Remote Shutdown Panel to be used while placing and maintaining the plant in a safe shutdown condition in the event the Control Room is uninhabitable. The indications are used to verify proper system response to plant conditions and operator actions. The LTOP System protects against Reactor Coolant System overpressurization at low temperatures by a combination of administrative controls and hardware. The hardware includes two Power-Operated Relief Valves with variable pressurizer pressure setpoints when operating in the LTOP operating parameter region. The Containment Sump High Level Alarm System provides an alarm in the Control Room for a containment sump to provide one of the available indications of excessive RCS leakage during normal plant operation. The Containment Area High Range Radiation Monitoring System provides an indication of high radiation levels in containment. The Containment Purge System actuates equipment to prevent the release of radioactive material to the environment in the event of a reactor coolant leak, a shielding failure, or a fuel pin failure when the reactor vessel head is removed.

The instruments in each of the systems described above are designed to be used in response to an accident. Failure of any of these systems is not an initiator for any previously evaluated accident. Therefore, the proposed change would not involve an increase in the probability of an accident previously evaluated.

Many of the instruments addressed in this license amendment request will have or have recently had a new brand of sensor installed. The effect of the increased surveillance interval with the new sensors was analyzed. The new sensors do not effect the physical design description of the plant, any design or functional requirements, or surveillances. The proposed Technical Specification change extending the surveillance interval from 18 months to a refueling interval (nominally 24 months, not to exceed 30 months) does not physically change the plant, change any design or functional requirements, or effect the surveillances themselves. Analysis has shown that no trip setpoints need to be changed, and operator indications will continue to be accurate for control of plant parameters to effect a safe shutdown. The equipment will continue to perform as designed to mitigate the consequences of accidents. Therefore, the proposed change would not involve a significant increase in the consequences of an accident. [* * *]

Therefore, the proposed change would not involve a significant increase in the probability or consequences of an accident previously evaluated.

2. Would not create the possibility of a new or different type of accident from any accident previously evaluated.

The proposed change to increase the interval RPS, ESFAS, PORV, LTOP, Remote Shutdown, PAM, Radiation Monitoring, and Containment Sump Level instrument surveillances from 18 months to a refueling interval (nominally 24 months, not to exceed 30 months) does not involve a significant change in the design or operation of the plant. No hardware is being added to the plant as part of the proposed change. Some detector upgrades in specific plant systems to enhance the performance of those systems have been or will be performed. However, those upgrades were evaluated and deemed acceptable under 10 CFR 50.59 and are not part of this request. The Reactor Protective System, Engineered Safety Features Actuation System, Power-Operated Relief Valve, Low Temperature Overpressure Protection, Containment Sump Level, one Radiation Monitoring actuation setpoints will not be changed. Analysis has shown that the remote shutdown and PAM indications will continue to be accurate. The proposed change will not introduce any new accident initiators. Therefore, this change does not create the possibility of a new or different type of accident from any previously evaluated.

3. Does operation of the facility in accordance with the proposed amendment

involve a significant reduction in a margin of safety?

The impact of the surveillance interval extension request was evaluated for each Technical Specification-related safety function for each of the RPS, ESFAS, PORV, LTOP, Remote Shutdown, PAM, Radiation Monitoring, and Containment Sump Level instruments addressed by this submittal. In all cases, parameters specified in the related accident analysis were determined to be unaffected by the surveillance interval extension, and no accident analyses limits required changes. The Reactor Protective System, Engineered Safety Features Actuation System, Power-Operated Relief Valve, Low Temperature Overpressure Protection, Containment Sump Level, and Radiation Monitoring actuation setpoints will not be changed. Analysis has shown that the remote shutdown and PAM indications will continue to be accurate. The methods for detection of degraded instrument operation have not been changed, and remote shutdown and PAM operator indications will continue to provide adequate accuracy. The methods for detection of degraded instrument operation have not been changed, and remote shutdown and PAM operator indications will continue to provide adequate accuracy.

The proposed change does not affect the operation of the systems involved. The surveillance interval extension will not affect the design of the systems, and methods for detection of degraded instrument operation will continue to identify operation problems between calibrations. Therefore, the proposed change does not involve a significant reduction in a margin of safety.

The NRC staff has reviewed the licensee's analysis and, based on this review, it appears that the three standards of 50.92(c) are satisfied. Therefore, the NRC staff proposes to determine that the amendments request involves no significant hazards consideration.

Local Public Document Room location: Calvert County Library, Prince Frederick, Maryland 20678.

Attorney for licensee: Jay E. Silbert, Esquire, Shaw, Pittman, Potts and Trowbridge, 2300 N Street, NW., Washington, DC 20037.

NRC Project Director: Ledyard B. Marsh.

Baltimore Gas and Electric Company, Docket Nos. 50–317 and 50–318, Calvert Cliffs Nuclear Power Plant, Unit Nos. 1 and 2, Calvert County, Maryland

Date of amendments request: June 9, 1995.

Description of amendments request: The proposed amendments revise the Calvert Cliffs Nuclear Power Plant Radiological Effluent Technical Specifications (RETS) consistent with Generic Letter (GL), ''Implementation of Programmatic Controls For Radiological Effluent Technical Specifications in the Administrative Controls Section of the Technical Specifications and the Relocation of Procedural Details of RETS to the Offsite Dose Calculation Manual or the Process Control Program (Generic Letter 89–01),'' dated January 31, 1989, and the Improved Standard Technical Specifications for Combustion Engineering Plants published in NUREG–1432, as modified by Mr. W. T. Russell's letter of October 25, 1993, ''Content of Standard Technical Specifications,'' to the Improved Technical Specification Owners Group Chairpersons. Changes for relocating the procedural details of the current RETS to the Offsite Dose Control Manual (ODCM) has been prepared in accordance with the proposed changes to the Administrative Controls section of the Technical Specifications.

Basis for proposed no significant hazards consideration determination: As required by 10 CFR 50.91(a), the licensee has provided its analysis of the issue of no significant hazards consideration, which is presented below:

The proposed change has been evaluated against the standards in 10 CFR 50.92 and has been determined to not involve a significant hazards consideration, in that operation of the facility in accordance with the proposed amendments:

1. Would not involve a significant increase in the probability or consequences of an accident previously evaluated.

The proposed changes will provide human factor improvements for the Technical Specifications by relocating existing procedural details of the current Radiological Effluent Technical Specifications to the Offsite Dose Control Manual (ODCM). Procedural details for solid radioactive wastes will be relocated to the Process Control Program. The proposed amendment (1) incorporates programmatic controls in the Administrative Controls section of the Technical Specifications that satisfy the requirements of 10 CFR 20.1302, 40 CFR Part 190, 10 CFR 50.36a, 10 CFR Part 50, Appendix I, and our current Technical Specifications; (2) relocates the existing procedural details in current specifications involving radioactive effluent monitoring instrumentation, the control of liquid and gaseous effluents, equipment requirements for liquid and gaseous effluents, radiological environmental monitoring, and radiological reporting details from the Technical Specifications to the ODCM; (3) simplifies the associated reporting requirements; (4) simplifies the administrative controls for changes to the ODCM; and (5) updates the definitions of the ODCM consistent with these changes.

Relocating existing requirements and eliminating requirements which duplicate regulatory requirements provide Technical Specifications which are easier to use. Because existing requirements are relocated to established programs where changes to those programs are controlled by regulatory requirements, there is no reduction in commitment and adequate control is still maintained. Likewise, the elimination of requirements which duplicate regulatory requirements enhances the usability of the Technical Specifications without reducing commitments. The additional improvements being proposed neither add nor delete requirements, but merely clarify and improve the readability and understanding of the Technical Specifications. Since the requirements remain the same, these changes only affect the method of presentation, and as such, would not affect possible initiating events for accidents previously evaluated or any system functional requirement.

Furthermore, no safety-related equipment, safety function, or plant operation will be altered as a result of this proposed change. The changes are unrelated to the initiation and mitigation of accidents and equipment malfunctions addressed in the Updated Final Safety Analysis Report.

Therefore, the proposed changes do not involve a significant increase in the probability or consequences of an accident previously evaluated.

2. Would not create the possibility of a new or different type of accident from any accident previously evaluated.

Transferring the procedural details of radiological effluent monitoring and reporting from the Technical Specifications to the ODCM has no impact on plant operation or safety. No safety-related equipment, safety function, or plant operation will be altered as a result of this proposed change. No changes to plant components or structures are introduced which could create new accidents or malfunctions not previously evaluated.

Therefore, the proposed changes do not create the possibility of a new or different kind of accident from any accident previously evaluated.

3. Would not involve a significant reduction in a margin of safety.

The margin of safety associated with the affected Technical Specifications is to provide assurance that the releases of radioactive materials during actual or potential releases of liquid or gaseous effluents do not exceed the limits of 10 CFR Part 20. This license amendment request relocates the methodology and parameters used to ensure that the 10 CFR Part 20 limits are maintained, but does not change any of these requirements. Thus, no methodology and parameters for controlling radioactive effluent releases will be changed.

The procedural details of the current Radiological Effluent Technical Specifications will be transferred to the ODCM and replaced with programmatic controls consistent with regulatory requirements, including controls on revisions to the ODCM. Thus, no requirements or controls will be reduced.

The proposed revisions to the reporting requirements for Radiological Effluent Release Report and the revision from the old 10 CFR 20.106 requirements to the new 10 CFR 20.1302 have no impact on plant systems, plant operations or accident precursors. The changes to the effluent

reporting requirements and the updated reference to 10 CFR 20.1302 do not change either the means of controlling radioactive releases or the effluent release limits. Therefore, there will be no change in the types and amounts of effluents that will be released, nor will there be an increase in individual or cumulative radiation exposures to any member of the public.

Therefore, the proposed changes do not involve a significant reduction in a margin of safety.

The NRC staff has reviewed the licensee's analysis and, based on this review, it appears that the three standards of 50.92(c) are satisfied. Therefore, the NRC staff proposes to determine that the amendments request involves no significant hazards consideration.

Local Public Document Room location: Calvert County Library, Prince Frederick, Maryland 20678.

Attorney for licensee: Jay E. Silbert, Esquire, Shaw, Pittman, Potts and Trowbridge, 2300 N Street, NW., Washington, DC 20037.

NRC Project Director: Ledyard B. Marsh.

Carolina Power & Light Company, Docket No. 50–261, H.B. Robinson Steam Electric Plant, Unit No. 2, Darlington County, South Carolina

Date of amendment request: June 3, 1995.

Description of amendment request: The requested Technical Specification (TS) change clarifies the definition of operability of the charging pumps by adding a footnote to TS Section 3.2.2.a that states that the connectibility of the emergency power sources is not required for charging pump operability.

Basis for proposed no significant hazards consideration determination: As required by 10 CFR 50.91(a), the licensee has provided its analysis of the issue of no significant hazards consideration, which is presented below:

This change request does not involve a significant hazards consideration for the following reasons.

1. The requested change does not involve a significant increase in the probability or consequences of an accident previously evaluated. The requested change clarifies that the emergency power sources are not required for the operability of the charging pumps. Operation of the charging pumps is not considered in the assumptions for initiation of any analyzed accident and is not credited for accident mitigation in any analyzed accidents in the safety analysis report. Therefore, the availability of emergency power sources to the charging pumps does not affect the probability of occurrence or consequences of an analyzed accident in the safety analysis report.

2. The requested change does not create the possibility of a new or different kind of accident from any accident previously evaluated. The requested change clarifies that the emergency power sources are not required for the operability of the charging pumps. The design requirements of the charging pumps to provide reactor coolant inventory and boron inventory control are not changed. The operability of the emergency power source to the charging pumps is not a precursor to any accident scenario. Failure of the charging pumps is bounded by the plant design which strips the charging pumps from the emergency buses under certain conditions. Since the change does not involve changes in the operation of the plant, or physical or equipment changes or involve controls for accident mitigation equipment, the requested change will not create the possibility of new or different kind of accident from any accident previously evaluated.

3. The requested change clarifies that the emergency power sources are not required for the operability of the charging pumps. Since the charging pumps are stripped from the emergency buses in the event of a loss of power and safety injection, emergency power sources to the charging pumps are not guaranteed to mitigate the consequences of an analyzed accident. As a result, no credit is taken for the charging function in analyzed accidents and the margin of safety as described in the safety analysis report is unchanged. Therefore, the requested change does not involve a significant reduction in a margin of safety.

The NRC staff has reviewed the licensee's analysis and, based on this review, it appears that the three standards of 10 CFR 50.92(c) are satisfied. Therefore, the NRC staff proposes to determine that the amendment request involves no significant hazards consideration.

Local Public Document Room location: Hartsville Memorial Library, 147 West College Avenue, Hartsville, South Carolina 29550.

Attorney for licensee: R. E. Jones, General Counsel, Carolina Power & Light Company, Post Office Box 1551, Raleigh, North Carolina 27602.

NRC Project Director: David B. Matthews.

Commonwealth Edison Company, Docket Nos. 50–454 and 50–455, Byron Station, Unit Nos. 1 and 2, Ogle County, Illinois

Docket Nos. 50–456 and 50–457, Braidwood Station, Unit Nos. 1 and 2, Will County, Illinois

Date of amendment request: February 21, 1995.

Description of amendment request: The proposed amendments would revise Byron and Braidwood technical specifications associated with the reactor coolant system (RCS) resistance temperature detectors (RTDs) used to obtain hot and cold leg temperatures. The amendments are required because of proposed modification that will remove the existing RTDs and their associated piping and valves and replace them with dual element fast response RTDs mounted in the thermowells welded directly in the RCS loop piping.

Basis for proposed no significant hazards consideration determination: As required by 10 CFR 50.91(a), the licensee has provided its analysis of the issue of no significant hazards consideration, which is presented below:

1. The proposed change does not involve a significant increase in the probability or consequences of an accident previously evaluated.

The proposed modification replaces the existing bypass piping system with thermowell-mounted RTDs. Because the hot leg RTDs are mounted directly in the scoops, temperature measurement inaccuracies caused by imbalances in the flow scoop sample flow are eliminated. The method of measuring coolant temperature with thermowell-mounted fast response RTDs has been analyzed to be at least as effective as the RTD bypass system. With the thermowells welded into the existing RCS hot and cold leg nozzles and the elimination of the bypass piping, the number of pressure boundary welds has been significantly reduced, resulting in a reduced probability of a small break LOCA [Loss of Coolant Accident].

The RTD response time is incorporated in the safety analyses. In particular, RTD response time is modeled in the OT[DELTA]T [Over Temperature Delta Temperature] and OP[DELTA]T [Over Pressure Delta Temperature] trip functions. The overall response time modeled in the safety analyses for the existing RTD bypass piping system is 8 seconds. The overall response time is the elapsed time from the time the temperature change in the RCS exceeds the trip setpoint until the rods are free to fall. More specifically, 6 seconds is modeled as a first order lag term and 2 seconds as pure delay on the reactor trip signal. The 6 second lag term includes such factors as: RTD bypass piping fluid transport delay, RTD bypass piping thermal lag, RTD response time, and RTD electronic filtering. The 2 second delay on reactor trip addresses such factors as electronics delay, trip breakers and gripper release.

Signal conditioning (filtering) of the individual loop [DELTA]T and T_{avg} signals is represented by [time constants utilized in the lag compensator for DELTA T] and [time constant utilized in the measured T_{avg} lag compensator], respectively, in the OT[DELTA]T and OP[DELTA]T equations in Technical Specification Table 2.2–1. With the current bypass manifold system, the filter is not required since the existing RTDs do not respond rapidly to local temperature variances within the reactor coolant loop. The bypass piping and manifold provide adequate mixing of the coolant, eliminating any local temperature variances. Therefore, the values of [time constants utilized in the lag compensator for DELTA T] and [time

constant utilized in the measured T_{avg} lag compensator] are currently specified as 0 seconds, effectively turning off the electronic filter. The new fast response RTDs may respond to temperature spikes which are not representative of actual RCS bulk fluid temperature. Signal conditioning may be required to eliminate these temperature spikes. Although, the current Technical Specifications do not provide for any signal conditioning, the 8 second total response time used in safety analyses has sufficient margin to account for a typical 2 second time constant for signal conditioning. Industry experience has shown that a 2 second filter is adequate in eliminating the spikes.

The proposed fast response RTD/thermowell system also has an overall response time of 8 seconds. However, the time distribution for the parameters differ between the existing and proposed designs. The existing design includes a transport time for RCS fluid to reach the RTD, located in the manifold. The RTDs are directly immersed into the coolant, providing a fast response. The new design no longer has the transport delay. However, because the RTDs are mounted in thermowells, the response time of the RTD/thermowell combination will be increased over the existing system.

The effects of a redistribution of the time responses between the total lag term (pipe transport delay, RTD response and electronic filter delay) and electronics delay term have been evaluated. Westinghouse completed a Safety Evaluation SECL–95–015, ''OT[DELTA]T and OP[DELTA]T Reactor Trip Response Time Safety Evaluation'' to support the revision to the time requirements. The evaluation concludes that, as long as the total response time remains [less than or equal to] 8 seconds, the safety analyses acceptance criteria continue to be met. The OT[DELTA]T and OP[DELTA]T trip functions are unaffected by the change.

The following Updated Final Safety Analysis Report (UFSAR) Chapter 15 events trip on OT[DELTA]T: Loss of Electric Load/Turbine Trip, Uncontrolled RCCA Bank Withdrawal at Power, CVCS Malfunction that Results in a Decrease in the Boron Concentration in the Reactor Coolant, and Inadvertent Opening of a Pressurizer Safety or Relief Valve. In addition, the following events trip on OP[DELTA]T: Steamline Break at Hot Full Power for Core Response, and Steamline Break Superheat Analysis. These events have been reviewed for a change in the distribution of time responses for OT[DELTA]T and OP[DELTA]T. The review concludes that the time response redistribution did not result in a minimum DNBR lower than the safety analyses limit, did not result in a fuel centerline melt, nor did the superheated steam releases change from those currently existing. Therefore, the radiological consequences for these events do not increase as a result of the less restrictive time response breakdown. Thus, the proposed amendment does not result in an increase in the probability or consequences of a previously evaluated accident.

2. The proposed change does not create the possibility of a new or different kind of accident from any accident previously evaluated.

The OT[DELTA]T and OP[DELTA]T trip functions are unaffected by the change. Electronic filtering of the RTD signal has been included, changing the dynamic compensation term of OT[DELTA]T and OP[DELTA]T setpoint equations. No other changes to the setpoint equation result from the proposed modification.

The added 7300 hardware is compatible with the existing 7300 electronic hardware now used. All changes to the 7300 protection cabinets have been qualified. The proposed system is functionally equivalent to the existing one. The proposed modification has been reviewed for conformance with the Institute of Electrical and Electronics Engineers (IEEE) 279–1971 criteria, associated General Design Criteria, Regulatory Guides, and other applicable industry standards. The single failure criterion is satisfied by the proposed modification, since the independence of redundant protection sets is maintained. The new RTD/thermowell system meets the equipment seismic and environmental qualification requirements of IEEE standards 344–1975 and 323–1974, respectively. The proposed changes do not affect the protection system capabilities to initiate a reactor trip. The 2 of 4 voting coincidence logic of the protection sets is maintained. Therefore, the proposed modification meets all appropriate IEEE criteria, industry standards and other guidelines.

In addition, the RTD outputs are used for rod control, turbine runback, pressurizer level and other control systems. These control systems receive the signal after it has been processed at the 7300 cabinets and are therefore unaffected by the proposed modification.

The design and installation of the thermowells is in accordance with the American Society of Mechanical Engineers (ASME) Code requirements. However, should a thermowell fail at the RCS pressure boundary, the resulting accident is enveloped by current design basis accident analyses. Thus, implementation of the proposed amendment does not create the possibility of a new or different kind of accident from any of those previously evaluated.

3. The proposed change does not involve a significant reduction in a margin of safety.

The 7300 protection cabinets calculate individual loop [DELTA]T and T_{avg}, based on the output of the RTDs. These values are used in the OT[DELTA]T and OP[DELTA]T reactor protection trip signals. Electronic filtering of the RTD signal will be included, changing the dynamic compensation term of OT[DELTA]T and OP[DELTA]T setpoint equations. No other changes to the setpoint equation result from the proposed modification. Although the total response time used as input into the safety analyses is unaffected by the proposed modification, the distribution of response times between the total lag (pipe transport delay, RTD response and electronic filter delay) and the electronic delay has changed. The UFSAR events which rely on OT[DELTA]T and OP[DELTA]T trips have been evaluated. The evaluation concludes that the safety analyses acceptance criteria continue to be met, since the total response time is consistent with the safety analyses. The OT[DELTA]T and OP[DELTA]T trips function in the same manner to terminate DNB-related transients. The reliability of the reactor protection system is unaffected by this change. Thus, the proposed modification does not involve a significant reduction in margin of safety.

The NRC staff has reviewed the licensee's analysis and, based on this review, it appears that the three standards of 10 CFR 50.92(c) are satisfied. Therefore, the NRC staff proposes to determine that the requested amendments involve no significant hazards consideration.

Local Public Document Room location: For Byron, the Byron Public Library District, 109 N. Franklin, P.O. Box 434, Byron, Illinois 61010; for Braidwood, the Wilmington Public Library, 201 S. Kankakee Street, Wilmington, Illinois 60481.

Attorney for licensee: Michael I. Miller, Esquire; Sidley and Austin, One First National Plaza, Chicago, Illinois 60603.

NRC Project Director: Robert A. Capra.

Commonwealth Edison Company, Docket Nos. STN 50–454 and STN 50–455, Byron Station, Unit Nos. 1 and 2, Ogle County, Illinois

Docket Nos. STN 50–456 and STN 50–457, Braidwood Station, Unit Nos. 1 and 2, Will County, Illinois

Date of amendment request: May 17, 1995.

Description of amendment request: The proposed amendment would modify the technical specifications to allow steam generator tubes to be repaired using the tungsten inert gas (TIG) welded sleeve process developed by ABB Combustion Engineering (ABB/CE), remove the ability to repair steam generator tubes using the Babcock & Wilcox Nuclear Technologies (BWNT) kinetically welded sleeve process, and increase the requirement to inspect the number of sleeved tubes from 3 percent of the total number of sleeved tubes in all four steam generators (SGs) or all sleeved tubes in one steam generator to 20 percent of each sleeve design installed. The proposed amendments would also delete the requirement to conduct additional corrosion testing to establish the design life for the BWNT kinetically welded sleeve in the presence of a crevice.

Basis for proposed no significant hazards consideration determination: As required by 10 CFR 50.91(a), the licensee has provided its analysis of the issue of no significant hazards consideration, which is presented below:

1. The proposed change does not involve a significant increase in the probability or

consequences of an accident previously evaluated.

The proposed amendment allows the ABB/CE TIG welded tubesheet sleeves and tube support plate sleeves to be used as an alternate tube repair method for Byron and Braidwood Units 1 and 2 Steam Generators (SGs). The sleeve configuration was designed and analyzed in accordance with the criteria of Regulatory Guide (RG) 1.121 and Section III of the ASME Code. Fatigue and stress analyses of the sleeved tube assemblies produce acceptable results for both types of sleeves as documented in ABB/CE Licensing Report CEN–621–P, Revision 00, ''Commonwealth Edison Byron and Braidwood Unit 1 & 2 Steam Generator Tube Repair Using Leak Tight Sleeves, FINAL REPORT,'' April 1995. Mechanical testing has shown that the structural strength of the sleeves under normal, faulted, and upset conditions is within the acceptable limits specified in RG 1.121. Leakage rate testing for the tube sleeves has demonstrated that primary to secondary leakage is not expected during any plant condition. The consequences of leakage through the sleeved region of the tube is fully bounded by the existing steam generator tube rupture (SGTR) analysis included in the Byron and Braidwood Updated Final Safety Analysis Report (UFSAR).

The current Technical Specification 3.4.6.2.c primary to secondary leakage limit of 150 gallons per day (gpd) through any one SG ensures that SG tube integrity is maintained in the event of main steam line break (MSLB) or loss of coolant accident (LOCA). The RG 1.121 criteria for establishing operational leakage rate limits require a plant shutdown based upon a leak-before-break consideration to detect a free span crack before a potential tube rupture. The 150 gpd limit will continue to allow for early leakage detection and require a plant shutdown in the event of the occurrence of an unexpected crack resulting in leakage that exceeds the TS limit.

The sleeves are designed to allow inservice inspection of the pressure retaining portions of the sleeve and parent tube. Inservice inspection is performed on all sleeves following installation to ensure that each sleeve has been properly installed and is structurally sound. Periodic inspections are performed in subsequent refuel outages to monitor sleeve degradation on a sample basis. The eddy current technique used for inspection will be capable of detecting both axial and circumferential flaws. A 20% sample of the sleeves are inspected each refuel outage. In the event that an imperfection exceeding the repair limit is detected an additional 20% sample will be inspected. The inspection scope is expanded to 100% of the sleeves should a repairable defect be found in the second sample. Tubes that contain defects in a sleeve, which exceed the repair limit, will be removed from service. This ensures that sleeve and tube structural integrity is maintained.

The proposed TS change to support the installation of TIG welded sleeves does not adversely impact any previously evaluated design basis accident. The effect of sleeve installation on the performance of the SG was analyzed for heat transfer, flow restriction, and steam generation capacity. The sleeves reduce the risk of primary to secondary leakage in the SG. The installation of ABB/CE sleeve results in a hydraulic flow restriction that is dependent on the number and types of sleeves installed. The reduction in primary system flow rate is a small percentage of the flow rate reduction seen from plugging one tube and is a preferable alternative when considering core margins based on minimum reactor coolant system flow rates. The sleeving installation will result in a resistance to primary coolant flow through the tube for other evaluated accidents. The results of the analyses and testing, as well as industry operating experience, demonstrate that the sleeve assembly is an acceptable means of maintaining tube integrity. In summary, installation of sleeves does not substantially affect the primary system flow rate or the heat transfer capability of the steam generators.

The sleeve sample size has been increased from 3% of the sleeved tubes in all four steam generators to include an eddy current inspection of a minimum of 20% of each sleeve design installed. Increasing the sample size of the sleeves to be inspected will increase the monitoring of tubes using sleeves for any further degradation while they remain in service. If the sample identifies a sleeve with an imperfection of greater than the repair limit, an additional 20% of the sleeves shall be inspected. The sleeves that have identified imperfections of greater than the repair limit shall be removed from service. Increasing the monitoring of the sleeves will assist in the early detection of a tube or sleeve imperfection and limit the probability of occurrence of an accident previously evaluated in the UFSAR.

Installation of the sleeves can be used to repair degraded tubes by returning the condition of the tubes to their original design basis condition for tube integrity and leak tightness during all plant conditions. The tube bundle overall structural and leakage integrity will be increased with the installation of the sleeves reducing the risk of primary to secondary leakage in the SG while maintaining acceptable reactor coolant system flow rates. Therefore sleeving will not increase the probability of occurrence of an accident previously evaluated.

Removal of the BWNT kinetically welded sleeve process as an approved SG tube repair methodology and not completing the additional corrosion testing necessary to establish the design life for the BWNT kinetically welded sleeve in the presence of a crevice will have no affect on plant operations. There are currently no BWNT kinetically welded sleeves installed in the Byron or Braidwood SGs. Had there been, plant operations would have still been bounded by the existing SGTR analysis in the Byron and Braidwood UFSAR.

Therefore, these proposed changes do not involve a significant increase in the probability or consequences of an accident previously evaluated.

2. The proposed change does not create the possibility of a new or different kind of accident from any accident previously evaluated.

The implementation of the proposed sleeving process will not introduce significant or adverse changes to the plant design basis. Stress and fatigue analyses of the repair has shown the ASME Code and RG 1.121 allowable values are met. Implementation of TIG welded sleeving maintains overall tube bundle structural and leakage integrity at a level consistent with that of the originally supplied tubing. Leak and mechanical testing of the sleeves support the conclusions that the sleeve retains both structural and leakage integrity during all conditions. Repair of a tube with a sleeve does not provide a mechanism that result in an accident outside of the area affected by the sleeve.

Any hypothetical accident as a result of potential tube or sleeve degradation in the repaired portion of the tube is bounded by the existing SGTR analysis. The SGTR analysis accounts for the installation of sleeves and the impact on current plugging level analyses. The sleeve design does not affect any other component or location of the tube outside of the immediate area repaired.

The current Technical Specification 3.4.6.2.c primary to secondary leakage limit of 150 gpd through any one SG ensures that SG tube integrity is maintained in the event of an MSLB or LOCA. The limit will provide for leakage detection and a plant shutdown in the event of the occurrence of an unexpected single crack resulting in excessive tube leakage. The leakage limit also provides for early detection and a plant shutdown prior to a postulated crack reaching critical crack lengths for MSLB conditions.

Inservice inspections are performed following sleeve installation to ensure proper weld fusion has occurred to maintain structural integrity. The post installation inspection also serves as baseline data to be used for comparison during future inspections. Periodic eddy current inspections monitor the pressure retaining portions of the sleeve and parent tube for degradation. Eddy current techniques will be employed that are sensitive to axial and circumferential degradation.

Increasing the sample size of tubes repaired using either sleeving process during each scheduled inservice inspection will increase the monitoring of these tubes for any further degradation. The improved monitoring and evaluation of the tube and the sleeves assures tube structural integrity is maintained or the tube is removed for service.

Corrosion testing of typical sleeve-tube configurations was performed to evaluate local stresses, sleeve life, and resistance to primary and secondary side corrosion. The tests were performed on stress relieved and as-welded (non-stress relieved) sleeve-tube joints. Using the corrosion test data in conjunction with finite element analyses of the local stress, the stress relieved joint life was determined to be in excess of 40 years. The ABB/CE TIG welded sleeve operating experience in the industry has shown no sleeve failures due to service induced degradation in sleeves that were installed with acceptable inspection results. This experience includes the stress relieved and

as-welded sleeve configurations. ComEd will stress relieve all sleeves at Byron and Braidwood as specified in the Technical Report.

Removal of the BWNT kinetically welded sleeve process as an approved SG tube repair methodology and not completing the additional corrosion testing necessary to establish the design life for the BWNT kinetically welded sleeve in the presence of a crevice will not create the possibility of a new or different type of accident from any accident previously evaluated. Repair of an SG tube with a BWNT kinetically welded sleeve would not have provided a mechanism that resulted in an accident outside of the area affected by the sleeve. Any hypothetical accident as a result of potential tube or sleeve degradation in the repaired portion of the tube would have been bounded by the existing SGTR analysis. The SGTR analysis accounts for the installation of sleeves and the impact on current plugging level analyses. The sleeve design does not affect any other component or location of the tube outside of the immediate area repaired. Furthermore, there are currently no BWNT kinetically welded sleeves installed in the Byron or Braidwood SGs.

Therefore, the proposed changes do not create the possibility of a new or different type of accident from any accident previously evaluated.

3. The proposed change does not involve a significant reduction in a margin of safety.

The TIG welded sleeving repair of degraded steam generator tubes has been shown by analysis to restore the integrity of the tube bundle to its original design basis condition. The safety factors used in the design of the sleeves for the repair of degraded tubes are consistent with the safety factors in the ASME Boiler and Pressure Vessel Code used in steam generator design. The design of the ABB/CE SG sleeves has been verified by testing to preclude leakage during normal and postulated accident conditions.

The portions of the installed sleeve assembly which represents the reactor coolant pressure boundary can be monitored for the initiation and progression of sleeve/tube wall degradation, thus satisfying the requirement of RG 1.83. The portion of the SG tube bridged by the sleeve joints is effectively removed from the pressure boundary, and the sleeve then forms the new pressure boundary. The sleeve enhances the safety of the plant by reestablishing the protective boundaries of the steam generator. Keeping the tube in service with the use of a sleeve instead of plugging the tube and removing it from service increases the heat transfer efficiency of the steam generator. During each scheduled inservice inspection, each sleeve inspected and found to have unacceptable degradation shall be removed from service. The effect on the design transients and the accident analyses have been reviewed based on the installation of sleeves equal to the tube plugging level coincident with the minimum reactor coolant flow rate. Evaluation of the installation of sleeves was based on the determination that LOCA evaluations for the licensed minimum reactor coolant flow bound the combined effect of tube plugging and sleeving up to an equivalent of the actual plugging limit. Sleeving results in a fractional amount of the plugging limitation of one tube and is a preferable alternative when considering core margins based on minimum reactor coolant system flow rates. The sleeving installation will result in a resistance to primary coolant flow through the tube. The primary coolant flow through the ruptured tube is reduced by the influence of the installed sleeve, thereby reducing the consequences to the public due to a SGTR event.

A SG sleeve removes an indication of a possible leak source from the reactor coolant system (RCS) pressure boundary, eliminating the potential of a primary-to-secondary leak. The structural integrity of the tube is maintained by the sleeve and sleeve-to-tube joint.

Installation of either tube sheet or tube support plate sleeves will increase the protective boundaries of the steam generators and will not reduce the margin of safety.

Removal of the BWNT kinetically welded sleeve process as an approved SG tube repair methodology and not completing the additional corrosion testing necessary to establish the design life for the BWNT kinetically welded sleeve in the presence of a crevice will not result in a reduction in the margin of safety. There are currently no BWNT kinetically welded sleeves installed in the Byron or Braidwood SGs. SG tube integrity will be maintained by applying an alternate NRC approved repair methodology or removing the SG tube from service by plugging.

Therefore, the proposed changes do not involve a significant reduction in the margin of safety.

The NRC staff has reviewed the licensee's analysis and, based on this review, it appears that the three standards of 10 CFR 50.92(c) are satisfied. Therefore, the NRC staff proposes to determine that the requested amendments involve no significant hazards consideration.

Local Public Document Room location: For Byron, the Byron Public Library District, 109 N. Franklin, P.O. Box 434, Byron, Illinois 61010; for Braidwood, the Wilmington Public Library, 201 S. Kankakee Street, Wilmington, Illinois 60481.

Attorney for licensee: Michael I. Miller, Esquire; Sidley and Austin, One First National Plaza, Chicago, Illinois 60603.

NRC Project Director: Robert A. Capra.

Commonwealth Edison Company, Docket Nos. 50–373 and 50–374, LaSalle County Station, Units 1 and 2, LaSalle County, Illinois

Date of amendment request: April 11, 1995.

Description of amendment request: The proposed amendments would allow a one-time extension of specific LaSalle, Units 1 and 2, 18 month Technical Specification Surveillance Requirements to allow surveillance testing to coincide with the LaSalle, Unit 1, seventh refueling outage (L1R07). The shutdown for L1R07 has been rescheduled from September 1995 until early 1996. The proposed extensions apply to: Calibrations and functional testing of isolation actuation instrumentation, emergency core cooling system actuation instrumentation, and recirculation pump trip actuation instrumentation; leakage testing of reactor coolant system isolation valves; inspection of fire rated seals; functional testing of mechanical snubbers; inspections of emergency diesel generators; and testing of batteries, battery chargers, and other electrical components.

Basis for proposed no significant hazards consideration determination: As required by 10 CFR 50.91(a), the licensee has provided its analysis of the issue of no significant hazards consideration, which is presented below:

(1) Involve a significant increase in the probability or consequences of an accident previously evaluated because:

The proposed change is temporary and allows a one-time extension of specific surveillance requirements for Unit 1 Cycle 7 to allow surveillance testing to coincide with the seventh refueling outage. The proposed surveillance interval extension is short and will not cause a significant reduction in system reliability nor affect the ability of the systems to perform their design function. Current monitoring of plant conditions and continuation of the surveillance testing required during normal plant operation will continue to be performed to ensure conformance with Technical Specification operability requirements. Therefore, this change does not involve a significant increase in the probability or consequences of an accident previously evaluated.

(2) Create the possibility of a new or different kind of accident from any accident previously evaluated because:

Extending the surveillance interval for the performance of specific testing will not create the possibility of any new or different kind of accidents. No changes are required to any system configurations, plant equipment, or analyses. Therefore, this change will not create the possibility of a new or different kind of accident from any accident previously evaluated.

(3) Involve a significant reduction in the margin of safety because:

Surveillance interval extensions will not impact any plant safety analyses since the assumptions used will remain unchanged. The safety limits assumed in the accident analyses and the design function of the equipment required to mitigate the consequences of any postulated accidents will not be changed since only the surveillance test interval is being extended. Historical performance generally indicates a high degree of reliability, and surveillance

testing performed during normal plant operation will continue to be performed to verify continued Operability of affected systems, structures and components. Therefore, the plant will be maintained within the analyzed limits, and the proposed extension will not significantly reduce the margin of safety.

The NRC staff has reviewed the licensee's analysis and, based on this review, it appears that the three standards of 10 CFR 50.92(c) are satisfied. Therefore, the NRC staff proposes to determine that the requested amendments involve no significant hazards consideration.

Local Public Document Room location: Jacobs Memorial Library, Illinois Valley Community College, Oglesby, Illinois 61348.

Attorney for licensee: Michael I. Miller, Esquire; Sidley and Austin, One First National Plaza, Chicago, Illinois 60603.

NRC Project Director: Robert A. Capra.

Commonwealth Edison Company, Docket Nos. 50–373 and 50–374, LaSalle County Station, Units 1 and 2, LaSalle County, Illinois

Date of amendment request: May 19, 1995.

Description of amendment request: The proposed amendments would revise the technical specification requirement to verify each fire protection valve is in the correct position at least once per 31 days. The proposed change will retain a monthly visual inspection of the fire protection valves that are accessible during plant operation. However, the interval for visual surveillance of those valves considered not accessible during plant operation will be changed to at least once per 18 months.

Basis for proposed no significant hazards consideration determination: As required by 10 CFR 50.91(a), the licensee has provided its analysis of the issue of no significant hazards consideration, which is presented below:

(1) Involve a significant increase in the probability or consequences of an accident previously evaluated because: The proposed change does not involve a significant increase in the probability or consequences of an accident previously evaluated in the UFSAR [Updated Final Safety Analysis Report]. The proposed change only changes the testing frequency for valves that are inaccessible during power operation. A check of the LaSalle LER database for the entire operating lifetime of LaSalle Units 1 and 2 was performed, and there has not been any instances in which any Technical Specification related Fire Protection valves have been found out of position. Therefore, the change to the frequency of testing will have no affect on the capability of fire suppression water systems, since all Technical Specification fire protection valves, both accessible and inaccessible at power operation, have a plant history of 100% correct valve lineup during monthly surveillances. Additionally, all fire protection valves that are in the fire suppression water flow path are either locked or seal wired in the required position at all times. The change does not impact the probability of any fire or other accident occurrence. Therefore, the proposed change does not cause an increase in the probability or consequences of an accident previously evaluated.

(2) Create the possibility of a new or different kind of accident from any accident previously evaluated because:

The proposed change does not involve a significant increase in the probability or consequences of an accident previously evaluated in the UFSAR. The proposed change only changes the testing frequency for valves that are inaccessible during power operation. The change to the frequency of testing will have no effect on the capability of fire suppression water systems, since the valves, both accessible and inaccessible at power operation, have a plant lifetime history of 100% correct valve lineup during monthly surveillances. Additionally, these valves are locked or sealed in the required position at all times. The change does not alter the performance of the fire suppression water system, and therefore introduces no new failure modes. With no alteration or degradation to equipment or system operation, the change introduces no new accident or malfunction.

(3) Involve a significant reduction in the margin of safety because:

The proposed change does not reduce the margin as defined in the bases for any Technical Specification. The proposed change only changes the testing frequency for all Technical Specification fire protection valves that are inaccessible during power operation. The plant history of 100% correct valve lineup for the Technical Specification fire protection valves, combined with the fact that these valves are always locked or sealed in the required position ensures that the bases' minimum OPERABILITY requirements of the fire suppression systems are met.

The NRC staff has reviewed the licensee's analysis and, based on this review, it appears that the three standards of 10 CFR 50.92(c) are satisfied. Therefore, the NRC staff proposes to determine that the requested amendments involve no significant hazards consideration.

Local Public Document Room location: Jacobs Memorial Library, Illinois Valley Community College, Oglesby, Illinois 61348.

Attorney for licensee: Michael I. Miller, Esquire; Sidley and Austin, One First National Plaza, Chicago, Illinois 60603.

NRC Project Director: Robert A. Capra.

Commonwealth Edison Company, Docket Nos. 50–295 and 50–304, Zion Nuclear Power Station, Units 1 and 2, Lake County, Illinois

Date of amendment request: May 31, 1995.

Description of amendment request: The proposed amendments would revise the Technical Specifications and incorporate new acceptance criteria for steam generator tubes with degradation in the tubesheet roll expansion region.

Basis for proposed no significant hazards consideration determination: As required by 10 CFR 50.91(a), the licensee has provided its analysis of the issue of no significant hazards consideration, which is presented below:

1. The proposed changes do not involve a significant increase in the probability of occurrence or consequences of an accident previously evaluated.

Application of the F* criteria to degraded steam generator tubes will not affect any of the initiators or precursors of any accident previously evaluated. Application of the proposed change will not increase the likelihood that a transient initiating event will occur because transients are initiated by equipment malfunction and/or catastrophic system failure. The proposed change will allow a new criteria to be applied to disposition steam generator tubes that are degraded in the tubesheet roll transition region. The F* criteria specify a minimum length of tubing which must be free from any indication of degradation. Below the F* length, any type or size of indication, including complete circumferential through wall cracking, will not impact the structural integrity of the tube with respect to pull out forces during normal operation or accident conditions, and does not significantly affect the leakage behavior of the tube. While the Zion UFSAR does not specifically address the Feedwater Line Break (FLB) accident, the FLB event was used as the limiting event in the evaluation of the F* criteria. The FLB pressure differential of 2650 psi maximizes the axial loading on the tube for pull out considerations and is bounding. In addition, the close proximity of the tubesheet to the tube will prevent tube rupture or collapse of the tube in the tubesheet span. Because application of the F* criteria will ensure that degraded tubes will provide the same structural integrity as an original undegraded tube during normal operation and accident and accident conditions, the probability of occurrence of an accident previously evaluated is not significantly increased.

Application of the F* criteria will not significantly increase the consequences of any accident previously evaluated. The F* criteria ensure that sufficient length of undegraded tube exists to maintain structural integrity and preclude significant leakage. Due to the proximity of the tubesheet to the tube, any leakage from degradations below the F* length would be negligible and would be well below the Technical Specification limits established for steam generator

leakage. Tube rupture as a result of indications below the F* distance is precluded because the tubesheet prevents outward expansion of the tube in response to internal pressure.

The relationship between the tubesheet region leak rate at the most limiting postulated accident conditions relative to that for normal plant operating conditions has been assessed. For the postulated leak source within the roll expansion, increasing the differential pressure on the tube on the tube wall increases the driving head for the leak; however, it also increases the tube to tubesheet loading.

For a leak source below the F* Distance, the maximum assumed pressure differential results in an insignificant leak rate relative to that which could be associated with normal plant operation. This is a result of the increased tube to tubesheet loading associated with the increased differential pressure. Thus for a circumferential indication within the roll expansion that is left in service in accordance with F* criteria, any leakage under accident conditions would be less than that experienced under normal operating conditions. Therefore, any leakage under accident conditions would be less than the existing Technical Specification leakage limit, which is consistent with accident analysis assumptions. Steam generator tube integrity must be maintained under the postulated loss of coolant accident condition of secondary-to-primary differential pressure. Based on tube collapse strength characteristics, the constraint provided to the tube by the tubesheet gives a margin between the tube collapse strength and the limiting secondary-to-primary differential pressure condition, even in the presence of circumferential or axial indications. The maximum secondary to primary differential pressure during a postulated LOCA is 1005 psi. This value is significantly below the residual preload between the tubes and the tube sheet. Therefore, no significant secondary to primary leakage would be expected to occur.

In addition, the proposed changes will not affect the ability to safely shut down the operating unit and mitigate the consequences of an accident because the proposed changes will not necessitate changes to the emergency procedures governing accident conditions or plant recovery.

Administrative and typographical changes are proposed to correct previous grammatical errors, to eliminate a parenthetical note that could cause confusion when applying the proposed requirements, and to make the terminology used in the Bases section consistent with the definitions provided in Specification 4.3.1. Those proposed changes will not increase the probability of occurrence or consequence of any accident previously evaluated.

2. The proposed changes do not create the possibility of a new or different kind of accident from any accident previously evaluated.

The proposed changes to the Technical Specifications do not involve the addition of any new or different types of safety related equipment nor do they involve the operation of any equipment required for safe operation of the facility in a manner different from those addressed in the UFSAR. No safety related equipment or function will be altered as a result of the proposed changes. Also, the procedures governing normal plant operation and recovery from an accident are not changed by the application of the F* criteria. The F* criteria will allow the use of an alternate method to plugging or sleeving to repair steam generator tubes with degradation in the tubesheet region. The F* criteria ensure that both the structural integrity and leak tight nature of the steam generator tube will be equivalent to the original tube. Since no new failure modes or mechanisms are introduced by the proposed changes, no new or different type of accident is created.

Administrative and typographical changes are proposed to correct previous grammatical errors, to eliminate a parenthetical note that could cause confusion when applying the proposed requirements, and to make the terminology used in the Bases section consistent with the definitions provided in Specification 4.3.1. Those proposed changes will not create the possibility of a new or different kind of accident from those previously evaluated.

3. The proposed changes do not involve a significant reduction in a margin of safety.

Plant safety margins are established through Limiting Conditions for Operation (LCOs), limiting safety system settings, and safety limits specified in Technical Specifications. There will be no changes to the LCOs, limiting safety system settings, or the safety limits as a result of the proposed changes. Application of the F* criteria will allow degraded steam generator tubes to be repaired by an alternative method to plugging or sleeving. Steam generator tube plugging decreases the total primary reactor coolant flow rate and heat transfer capability of the steam generator. While steam generator tube sleeving only slightly reduces the reactor coolant flow rate, large numbers of sleeves can have a measurable effect on flow rate and can complicate steam generator tube inspection activities.

Application of the F* criteria will allow a repair method that will restore the integrity of degraded steam generator tubes and will not adversely affect primary system flow rate or heat transfer capability. Application of the F* criteria will preserve the heat transfer capability of the steam generators and will maintain the design margins assumed in the analyses contained in the UFSAR. The alternate repair method will also be less complicated, faster, and will reduce personnel occupational exposure significantly. Based on the above discussion it is concluded that the proposed changes will not significantly reduce a margin of safety.

Administrative and typographical changes are proposed to correct previous grammatical errors, to eliminate a parenthetical note that could cause confusion when applying the proposed requirements, and to make the terminology used in the Bases section consistent with the definitions provided in Specification 4.3.1. Those proposed changes will not impact any margin of safety.

The NRC staff has reviewed the licensee's analysis and, based on this review, it appears that the three standards of 10 CFR 50.92(c) are satisfied. Therefore, the NRC staff proposes to determine that the requested amendments involve no significant hazards consideration.

Local Public Document Room location: Waukegan Public Library, 128 N. County Street, Waukegan, Illinois 60085.

Attorney for licensee: Michael I. Miller, Esquire; Sidley and Austin, One First National Plaza, Chicago, Illinois 60603.

NRC Project Director: Robert A. Capra.

Entergy Operations, Inc., Docket Nos. 50–313 and 50–368, Arkansas Nuclear One, Unit Nos. 1 and 2 (ANO–1&2), Pope County, Arkansas

Date of amendment request: April 4, 1995.

Description of amendment request: The proposed amendments revise requirements associated with the ventilation system that services both the Unit 1 and Unit 2 control rooms.

Basis for proposed no significant hazards consideration determination: As required by 10 CFR 50.91(a), the licensee has provided its analysis of the issue of no significant hazards consideration, which is presented below:

Criterion 1—Does Not Involve a Significant Increase in the Probability or Consequences of an Accident Previously Evaluated.

The control room emergency ventilation and air conditioning systems are not initiators of an accident previously evaluated. Extension of the allowable outage time for one inoperable control room emergency air conditioning system from 7 days to 30 days is acceptable based on the low probability of an event occurring that would require control room isolation and a concurrent or subsequent failure of the remaining operable control room emergency air conditioning system. An evaluation using probabilistic safety assessment techniques has shown the frequency of this event to be at an acceptably low level (4.67E–6/yr). The ANO–1 surveillance requirements for the control room emergency ventilation and air conditioning system has been updated for consistency with the ANO–2 requirements and are consistent with RG 1.52, March 1978, Revision 2. The relaxation in the ANO–2 Mode of Applicability for the control room radiation monitoring instrumentation is acceptable based on the fuel handling accident analysis dose consequences. The analysis assumes that the control room emergency ventilation system is actuated during a fuel handling accident in the containment building. This analysis also shows that the dose consequences to the control room operators are acceptable in the event of a fuel handling analysis in the

auxiliary building, assuming that the normal control room ventilation system only is in operation. When the unit is in Mode 5 or Mode 6 (with no handling of irradiated fuel in the containment building), no accident condition has been identified that would require the control room emergency ventilation system to actuate due to high radiation. The remainder of the changes have been made for consistency between the ANO–1 and ANO–2 TS and are considered to be administrative in nature.

Therefore, this change does *not* involve a significant increase in the probability or consequences of any accident previously evaluated.

Criterion 2—Does Not Create the Possibility of a New or Different Kind of Accident from any Previously Evaluated

The control room emergency ventilation and air conditioning systems are not accident initiators. The proposed changes introduce no new mode of plant operation and no new possibility for an accident is introduced by modifying the ANO–1 surveillance testing requirements for the control room emergency ventilation and air conditioning systems.

Therefore, this change does *not* create the possibility of a new or different kind of accident from any previously evaluated.

Criterion 3—Does Not Involve a Significant Reduction in the Margin of Safety

With the exception of the AOT extension and the relaxation of the ANO–2 Mode of Applicability for the control room radiation monitoring instrumentation, all the ANO–1 and ANO–2 changes are considered administrative or more restrictive and are intended to clarify and make consistent the requirements of the control room emergency habitability equipment. Although the AOT extension does involve an incremental reduction in the margin of safety due to a slight increase in the frequency of an event requiring control room isolation, followed by failure of the operable emergency control room chiller, a probabilistic safety assessment has shown this slight increase in frequency (approximately 3.58E–6/yr) to be acceptably low. The relaxation in the ANO–2 Mode of Applicability for the control room radiation monitoring instrumentation is acceptable based on the fuel handling accident analysis dose consequences. The analysis assumes that the control room emergency ventilation system is actuated during a fuel handling accident in the containment building. This analysis also shows that the dose consequences to the control room operators are acceptable in the event of a fuel handling analysis [sic., accident] in the auxiliary building, assuming that the normal control room ventilation system only is in operation. When the unit is in Mode 5 or Mode 6 (with no handling of irradiated fuel in the containment building), no accident condition has been identified that would require the control room emergency ventilation system to actuate due to high radiation.

Therefore, this change does *not* involve a significant reduction in the margin of safety.

The NRC staff has reviewed the licensee's analysis and, based on this review, it appears that the three standards of 10 CFR 50.92(c) are satisfied. Therefore, the NRC staff proposes to determine that the amendment request involves no significant hazards consideration.

Local Public Document Room location: Tomlinson Library, Arkansas Tech University, Russellville, AR 72801.

Attorney for licensee: Nicholas S. Reynolds, Esquire, Winston and Strawn, 1400 L Street, N.W., Washington, DC 20005–3502.

NRC Project Director: William D. Beckner.

Entergy Operations, Inc., Docket Nos. 50–313 and 50–368, Arkansas Nuclear One, Unit Nos. 1 and 2 (ANO–1&2), Pope County, Arkansas

Date of amendment request: April 4, 1995.

Description of amendment request: The proposed amendments delete requirements to perform inservice inspections of reactor coolant pump flywheels at both Unit 1 and Unit 2.

Basis for proposed no significant hazards consideration determination: As required by 10 CFR 50.91(a), the licensee has provided its analysis of the issue of no significant hazards consideration, which is presented below:

Criterion 1—Does Not Involve a Significant Increase in the Probability or Consequences of an Accident Previously Evaluated.

Missile generation from a reactor coolant pump (RCP) flywheel could damage the reactor coolant system, the containment, or other equipment or systems important to safety. The fracture mechanics analyses conducted to support the change shows that a preexisting crack sized just below detection level will not grow to the flaw size necessary to create flywheel missiles within the life of the plant. This analysis conservatively assumes minimum material properties, maximum flywheel accident speed, location of the flaw in the highest stress area and a number of startup/shutdown cycles eight times greater than expected. Since an existing flaw in the flywheel will not grow to the allowable flaw size under normal operating conditions or to the critical flaw size under LOCA conditions over the life of the plant, elimination of inservice inspections for such cracks during the plant's life will *not* involve a significant increase in the probability of an accident previously considered.

The proposed changes do not increase the amount of radioactive material available for release or modify any systems used for mitigation of such releases during accident conditions. Therefore, these changes do *not* involve a significant increase in the consequences of any accident previously evaluated.

Criterion 2—Does Not Create the Possibility of a New or Different Kind of Accident from any Previously Evaluated

The proposed changes will not change the design, configuration, or method of operation of the plant and therefore, will *not* create the possibility of a new or different kind of accident from any previously evaluated.

Criterion 3—Does Not Involve a Significant Reduction in the Margin of Safety

Significant conservatisms have been used for calculating the allowable flaw size, critical flaw size and crack growth rate in the RCP flywheels. These include minimum material properties, maximum flywheel accident speed, location of the flaw in the highest stress area and a number of startup/shutdown cycles eight times greater than expected. Since an existing flaw in the flywheel will not grow to the allowable flaw size under normal operating conditions or to the critical flaw size under LOCA conditions over the life of the plant, elimination of inservice inspections for such cracks during the plant's life will *not* involve a significant reduction in the margin of safety.

The NRC staff has reviewed the licensee's analysis and, based on this review, it appears that the three standards of 10 CFR 50.92(c) are satisfied. Therefore, the NRC staff proposes to determine that the amendment request involves no significant hazards consideration.

Local Public Document Room location: Tomlinson Library, Arkansas Tech University, Russellville, AR 72801.

Attorney for licensee: Nicholas S. Reynolds, Esquire, Winston and Strawn, 1400 L Street, N.W., Washington, DC 20005–3502.

NRC Project Director: William D. Beckner.

Entergy Operations, Inc., Docket No. 50–368, Arkansas Nuclear One, Unit No. 2, Pope County, Arkansas

Date of amendment request: April 4, 1995.

Description of amendment request: The proposed amendment revises surveillance requirements associated with the main turbine steam valves.

Basis for proposed no significant hazards consideration determination: As required by 10 CFR 50.91(a), the licensee has provided its analysis of the issue of no significant hazards consideration, which is presented below:

Criterion 1—Does Not Involve a Significant Increase in the Probability or Consequences of an Accident Previously Evaluated.

Modifying the surveillance frequency of the main turbine-generator (MTG) overspeed protection system introduces no new failure mechanism for the machine, so the consequences, of a postulated MTG overspeed event are no different than those previously evaluated.

As explained in NUREG–1366, ''Improvements to Technical Specifications Surveillance Requirements,'' the present surveillance test frequency requirements were developed for fossil units and carried over to nuclear units due to the similarity in design. However, the particulate concentration, phosphate chemistry and higher steam temperatures present in earlier fossil secondary systems, which were major contributing factors to problems identified by these tests, are not present in the Arkansas Nuclear One-Unit 2 (ANO–2) secondary systems. The operating history of turbine valves at ANO–2 is very good, with no failures identified during the performance of overspeed protection system surveillance testing. Therefore, that change does not involve a significant increase in the probability of any accident previously evaluated.

Therefore, this change does *not* involve a significant increase in the probability or consequences of an accident previously evaluated.

Criterion 2—Does Not Create the Possibility of a New or Different Kind of Accident from any Previously Evaluated.

Because the proposed changes do not alter the design, configuration, or method of operation of the plant, they do *not* create the possibility of a new or different kind of accident from any previously evaluated.

Criterion 3—Does Not Involve a Significant Reduction in the Margin of Safety.

These proposed changes do not alter the acceptance of any surveillance requirements, alter any assumptions used in accident analysis, change any actuation setpoints, nor allow operations in any configuration not previously evaluated. This change in surveillance frequency is based on an operating history of the turbine overspeed protection system which indicates that reducing the test frequency will have no adverse impact on the continued safe operation of the unit.

Therefore, this change does *not* involve a significant reduction in the margin of safety.

The NRC staff has reviewed the licensee's analysis and, based on this review, it appears that the three standards of 10 CFR 50.92(c) are satisfied. Therefore, the NRC staff proposes to determine that the amendment request involves no significant hazards consideration.

Local Public Document Room location: Tomlinson Library, Arkansas Tech University, Russellville, AR 72801

Attorney for licensee: Nicholas S. Reynolds, Esquire, Winston and Strawn, 1400 L Street, NW., Washington, DC 20005–3502.

NRC Project Director: William D. Beckner.

Florida Power Corporation, et al., Docket No. 50–302, Crystal River Nuclear Generating Plant, Unit No. 3, Citrus County, Florida

Date of amendment request: May 31, 1995.

Description of amendment request: The proposed amendment would revise the the Technical Specifications (TS) for the Crystal River Unit 3 to facilitate a 24 month operating cycle by changing the surveillance interval for appropriate TS surveillance requirements that are generally performed during a refueling outage. Additionally, the functional description and the ''Allowable Value'' for three Reactor Protection System and one Emergency Feedwater Initiation and Control System setpoints would be revised. The quantitative limits for determining the operational status of the reactor coolant pumps, the main feedwater pumps, and the main turbine would be relocated from the TS to the Final Safety Analysis Report (FSAR). The surveillance associated with the high radiation setpoint for control room isolation would also be changed to reflect that the setpoint is an ''approximate value'' instead of an ''Allowable value''. The current specified surveillance interval for some equipment and systems which were not re-evaluated or which could not be justified by the evaluation process would not be changed.

Specifically:

1. TS Surveillance Requirements (SR) 3.3.1.6, SR 3.3.5.3, SR 3.3.6.1, SR 3.3.9.2, SR 3.3.10.2, SR 3.3.11.3, SR 3.3.17.2, SR 3.3.18.2, and SR 3.9.2.2 would be revised to extend the surveillance frequency from 18 to 24 months. Also, in TS SR 3.3.17.2 a note would be added indicating the frequency for Function 12 is 18 months.

2. In TS Table 3.3.1–1,

(a) the Function for ''Reactor Coolant Pump Power Monitor (RCPPM)'' would be changed to ''Reactor Coolant Pumps,'' and the ''Allowable Value'' column for this function would be revised to delete the quantitative value and to indicate ''More than one pump tripped'',

(b) the Function for ''Main Turbine Trip (Control Oil Pressure)'' would be changed to ''Main Turbine,'' and the Allowable Value is changed to ''Turbine Tripped'' and

(c) the Function for ''Loss of Both Main Feedwater Pumps (Control Oil Pressure)'' would be changed to ''Main Feedwater Pumps,'' and the Allowable Value is changed to ''Both Pumps Tripped''

3. In TS Table 3.3.11–1, Function 1.a would be changed from ''EFW Initiation—Loss of MFW Pumps (Control Oil Pressure)'' to ''EFW Initiation—Main Feedwater Pumps,'' and the Allowable Value is changed to ''Both Pumps Tripped.''

4. In TS SR 3.3.16.3, the CHANNEL CALIBRATION setpoint would be changed from an allowable value to an approximate setpoint.

Basis for proposed no significant hazards consideration determination: As required by 10 CFR 50.91(a), the licensee has provided its analysis of the issue of no significant hazards consideration, which is presented below:

1. Operation of the facility in accordance with the proposed amendment would not involve a significant increase in the probability of occurrence or the consequences of an accident previously evaluated. The proposed amendment extends the interval between successive refueling outage based surveillances to once every 24 months for those surveillances evaluated herein and, maintains the existing surveillance interval restriction for those systems and equipment not evaluated for extension. The reliability of systems and components relied upon to prevent or mitigate the consequences of accidents previously evaluated is not degraded beyond that obtained from the currently defined refueling outage interval. Assurance of system and equipment availability is maintained. This change does not involve any change to system or equipment configuration. Therefore, this change does not increase the probability of occurrence or the consequences of an accident previously evaluated.

2. Operation of the facility in accordance with the proposed amendment would not create the possibility of a new or different kind of accident from any accident previously evaluated. The proposed amendment extends the interval between successive refueling outage based surveillances to once every 24 months for those surveillances evaluated herein and maintains the existing surveillance interval restriction for those systems and equipment not evaluated for extension. This change does not involve any change to system or equipment configuration. Therefore, this change is unrelated to the possibility of creating a new or different kind of accident from any previously evaluated.

3. Operation of the facility in accordance with the proposed amendment would not involve a significant reduction in a margin of safety. The proposed amendment extends the interval between successive refueling outage based surveillances to once every 24 months for the surveillances evaluated herein, and maintains the existing surveillance interval restriction for those systems and equipment not evaluated for extension. The reliability of systems and components is not degraded beyond that obtained from the currently defined refueling outage interval. Assurance of system and equipment availability is maintained.

Therefore, it is concluded that operation of the facility in accordance with the proposed amendment does not involve a significant reduction in a margin of safety. The proposed extension of the refueling outage interval surveillances to once every 24 months does not degrade the reliability of systems and components beyond that obtained from the currently defined refueling outage interval.

Reliable performance of the systems and equipment effected by this change has been demonstrated.

Implementation of the proposed amendment will maintain the required level of assurance of system and equipment availability. The surveillance interval for systems and equipment that have not been evaluated for extension are excluded from this request. Thus, operation of the facility in accordance with the proposed amendment involves no significant hazards considerations.

The NRC staff has reviewed the licensee's analysis and, based on this review, it appears that the three standards of 50.92(c) are satisfied. Therefore, the NRC staff proposes to determine that the amendment request involves no significant hazards consideration.

Local Public Document Room location: Coastal Region Library, 8619 W. Crystal Street, Crystal River, Florida 32629.

Attorney for licensee: A.H. Stephens, General Counsel, Florida Power Corporation, MAC–A5D, P. O. Box 14042, St. Petersburg, Florida 33733.

NRC Project Director: David B. Matthews.

Florida Power Corporation, et al., Docket No. 50–302, Crystal River Nuclear Generating Plant, Unit No. 3, Citrus County, Florida.

Date of amendment request: May 31, 1995.

Description of amendment request: The proposed amendment would revise the technical specifications (TS) for the Crystal River Nuclear Plant Unit 3 (CR3) relating to the Once Through Steam Generator's (OTSG's) tube inspection acceptance criteria. Currently, the TS specify repair limit for removing steam generator tubes from service based on a structural evaluation of a simplified model of tubes with uniform through wall (T/W) thinning. A recent tube-pull examination at CR3 identified a number of low signal-to-noise (S/N) tube eddy current indications. The licensee indicated that these S/N indications are a substantially different morphology from the model used to develop the current TS inspection and acceptance limit. As a result of the small signal amplitude associated with these S/N indications, they cannot be accurately sized by conventional bobbin coil phase angle. Therefore, the licensee proposed an alternate methodology for dispositioning the S/N indications. The proposed criteria would address both wear and Inter-Granular-Attack (IGA) degradation mechanisms. Crack-like eddy current indications are *not* included within the proposed scope.

Specifically, the licensee proposed to:

A. Revise TS 5.6.2.10.2, page 5.0–14, ''The results of each sample inspection shall be classified into one of the following three categories:'' to read: ''The results of each bobbin coil sample inspection shall be classified into one of the following three categories:''

B. Revise the Note in TS 5.6.2.10.2, page 5.0–14, ''In all inspections, previously degraded tubes whose degradation has not been spanned by a sleeve must exhibit a significant increase in the applicable imperfection size measurement (> +0.5V bobbin coil amplitude increase for S/N indications or >10% further wall penetration for all other imperfections) to be included in the below percentage calculations.''

C. Revise the sentence in TS 5.6.2.10.4.a.2, page 5.0–16, ''Eddy-current* * *as imperfections'' to read: S/N indications with a bobbin coil amplitude < 0.9V are considered imperfections. Other eddy current testing indications below 20% of the nominal tube wall thickness, if detectable, may also be considered as imperfections.

D. Revise TS 5.6.2.10.4.a.4, page 5.0–16, to read:

''Degraded Tube means a tube containing a S/N indication with a bobbin coil amplitude ≥ 0.9V or other imperfection ≥ 20% of the nominal wall thickness caused by degradation except where all such degradation has been spanned by the installation of a sleeve.''

E. Add TS 5.6.2.10.4.a.7 ''Signal-to-Noise (S/N) indication means an indication whose associated bobbin coil amplitude is < 5 times the background noise, excluding indications located in the tube sheet regions or indications determined to be other than a volumetric morphology.''

F. Renumber 5.6.2.10.4.a.7 to 5.6.2.10.4.a.8, and revise to read: Plugging/Sleeving Limit means the imperfection depth at or beyond which the tube shall be restored to serviceability by the installation of a sleeve or removed from service because it may become unserviceable prior to the next inspection. The Limit for S/N indications is equal to a bobbin coil amplitude of 2.5V, an axial extent of 0.33 inches, or a circumferential extent of 0.6 inches. The Limit is equal to 40% of the nominal tube or sleeve wall thickness for other imperfections. No more than 5000 sleeves may be installed in each OTSG.

G. Renumber 5.6.2.10.4.a.8, and 9 to 5.6.2.10.4.a.9 and 10.

H. Revise TS 5.7.2.c.2, page 5.0–29, to read:

Location, bobbin coil amplitude, and axial and circumferential extent (if determined) for each S/N indication and the location and percent of wall thickness penetration for each other indication of an imperfection, and

Basis for proposed no significant hazards consideration determination: As required by 10 CFR 50.91(a), the licensee has provided its analysis of the issue of no significant hazards consideration, which is presented below:

1. The proposed change will not significantly increase the probability or consequences of an accident previously evaluated. The relevant accidents are excessive leakage or steam generator tube rupture (as a consequence of MSLB [Main steam Line Break] or otherwise).

RG [Regulatory Guide] 1.121 establishes a standard method for demonstrating structural integrity under worse-than-DBE [design basis Event] conditions. The existing TS is based on this RG. The S/N disposition strategy continues to rely on this guidance. Current TW sizing techniques would allow defects greater than the current TS limit of 40% to remain in service since these techniques do not accurately measure percent wall penetration for small volume indications. The proposed disposition strategy is based in measurable eddy current parameters of voltage, axial extent, and circumferential extent shown to provide a higher confidence that unacceptable flaws are removed from service. Therefore, the probability of a Steam Generator Tube Rupture (SGTR) is not increased and may well be decreased by implementation of this S/N disposition strategy.

The probability of OTSG tube leakage during normal operation or accident conditions is not adversely affected by the proposed S/N disposition strategy. Operating history indicates essentially no primary to secondary leakage through the OTSG tubes at CR–3. Growth rate studies imply this trend could be expected to continue. Therefore, current leakage limits are retained. Small volume indications which might leak during worse-case FWLB [Feedwater Line Break] conditions are addressed in the RG 1.121 evaluation. The disposition strategy ensure these indications are removed from service as part of the inservice inspection. Once detected, the proposed criteria is at least as effective in determining those indications which should be removed from service as are the existing TS limits.

The S/N disposition strategy is an integral part of an overall effort to better address these and similar phenomena in OTSGs.

2. The proposed change will not create the possibility of a new or different kind of accident from any accident previously evaluated.

The key 'new or different' accidents addressed in this and similar proposals is the potential for MSLB-induced multiple SGTR or excessive primary-to-secondary leakage during such events. While these events are addressed in CR–3 Emergency Operating Procedures (EOPs), they are beyond those licensed for the facility.

However, as noted above, the probability of MSLB induced multiple SGTR is reduced by more effective screening and plugging/

sleeving criteria. The probability of detection and identification of tubes which should be removed from service is maintained or improved by the S/N disposition strategy. The likelihood of adverse effects from plugging sound tubes is reduced. The operation of the OTSG or related structures, systems or components is otherwise unaffected.

3. The proposed change will not involve a significant reduction to any margin of safety.

The margins of safety defined in RG 1.121, including the required pressure used in the structural analysis, are retained. The probability of detecting degradation is unchanged since bobbin coil methods will continue to be the primary means of initial detection. The probability of leakage remains acceptably small. The proposed S/N disposition strategy is an enhancement to the inservice inspection of OTSG tubing that will provide a higher level of confidence that tubes exceeding the allowable limits are repaired while sound tubes are left in service. Based upon results of the various growth rate studies, the probability of an accident at the end of cycle is essentially the same as the beginning.

The NRC staff has reviewed the licensee's analysis and, based on this review, it appears that the three standards of 50.92(c) are satisfied. Therefore, the NRC staff proposes to determine that the amendment request involves no significant hazards consideration.

Local Public Document Room location: Coastal Region Library, 8619 W. Crystal Street, Crystal River, Florida 32629.

Attorney for licensee: A. H. Stephens, General Counsel, Florida Power Corporation, MAC–A5D, P. O. Box 14042, St. Petersburg, Florida 33733.

NRC Project Director: David B. Matthews.

Florida Power and Light Company, Docket Nos. 50–250 and 50–251, Turkey Point Plant Units 3 and 4, Dade County, Florida

Date of amendment request: June 19, 1995.

Description of amendment request: The licensee proposes to change Turkey Point Units 3 and 4 Technical Specifications (TS) by separation of the 24-hour emergency diesel generator (EDG) run and hot restart EDG test from the loss-of-offsite-power load acceptance test. The licensee revised the original amendment request dated March 30, 1995, by letters dated May 5, 1995, and June 19, 1995.

Basis for proposed no significant hazards consideration determination: As required by 10 CFR 50.91(a), the licensee has provided its analysis of the issue of no significant hazards consideration, which was previously presented in the **Federal Register** (60 FR 27339, May 23, 1995). The licensee concluded that the proposed license amendments' revisions do not alter the original conclusion that no significant hazards considerations exist pursuant to 10 CFR 50.92.

The NRC staff has reviewed the licensee's analysis and, based on this review, it appears that the three standards of 50.92(c) are satisfied. Therefore, the NRC staff proposes to determine that the amendment request and its revisions involve no significant hazards consideration.

Local Public Document Room location: Florida International University, University Park, Miami, Florida 33199.

Attorney for licensee: J.R. Newman, Esquire, Morgan, Lewis & Bockius, 1800 M Street, NW., Washington, DC 20036.

NRC Project Director: David B. Matthews.

Georgia Power Company, Oglethorpe Power Corporation, Municipal Electric Authority of Georgia, City of Dalton, Georgia, Docket Nos. 50–321 and 50–366, Edwin I. Hatch Nuclear Plant, Units 1 and 2, Appling County, Georgia

Date of amendment request: January 13, 1995, as supplemented by letters dated April 5 and June 20, 1995.

Description of amendment request: The proposed amendments would change the Facility Operating Licenses and their corresponding Appendices A which contain the Technical Specifications (TS) to permit the implementation of the power uprate program at the Edwin I. Hatch Nuclear Plant, Units 1 and 2. The Hatch units are currently licensed for operation at 2436 megawatts thermal (MWt). The proposed changes would redefine the rated thermal power to 2558 MWt, which represents an increase of 5% over the current licensed level in accordance with the generic boiling water reactor (BWR) power uprate program established by the General Electric Company (GE) and approved by the U.S. Nuclear Regulatory Commission (NRC) staff in a letter from W. T. Russell, NRC, to P. W. Marriott, GE, dated September 30, 1991. Implementation of the proposed power uprate at Plant Hatch will result in an increase of steam flow to approximately 106% of the current value but will require no changes to the basic fuel design. Implementation of this proposed power uprate will require minor modifications, such as resetting the safety relief setpoints, as well as the calibration of plant instrumentation to reflect the uprated power. Plant operating, emergency, and other procedure changes will be made where necessary to support uprated operation.

Basis for proposed no significant hazards consideration determination: As required by 10 CFR 50.91(a), the licensee has provided its analysis of the issue of no significant hazards consideration which is presented below:

1. Will the changes involve a significant increase in the probability or consequences of an accident previously evaluated?

A. Rated Thermal Power is increased to 2558 MWt on page 3 of the Unit 1 Operating License, page 4 of the Unit 2 Operating License, and in Section 1.1 (Definitions) of the Units 1 and 2 Technical Specifications.

Evaluation

The changes in the Operating Licenses and Technical Specifications were evaluated and it was determined that the probability (frequency of occurrence) of design basis accidents occurring is not affected by the increased power level, as the regulatory criteria established for plant equipment (e.g., ASME Code, IEEE standards, NEMA standards, Regulatory Guide criteria) will still be complied with at the uprated power level. Scram setpoints (equipment settings that initiate automatic plant shutdowns) will be established such that there is no significant increase in scram frequency due to uprate. No new challenges to safety-related equipment will result from power uprate.

The changes in consequences of hypothetical accidents which would occur from 102% of the uprated power, compared to those previously evaluated, are in all cases insignificant, because the power uprate accident evaluations will not result in exceeding any NRC-approved acceptance limits. Enclosure 4 of Reference 1, General Electric Report NEDC–32405P, ''Power Uprate Safety Analysis for Edwin I. Hatch Plant Units 1 and 2,'' December 1994, investigated the spectrum of hypothetical accidents and transients, and showed the plant's current regulatory criteria are satisfied at power uprate. For example, in the area of core design, the fuel operating limits will still be met at the uprated power level, and fuel reload analyses will show plant transients meet the criteria accepted by the NRC as specified in NEDO–24011, ''GESTAR II.'' Challenges to fuel or emergency core cooling system (ECCS) performance were evaluated (Section 4.2 of NEDC–32405P) and shown to still meet the criteria of 10 [CFR] 50.46 and Appendix K. Challenges to the containment were evaluated (Section 4.1 of NEDC–32405P) and shown to still meet 10 CFR 50 Appendix A, Criterion 38, Long Term Cooling, and Criterion 50, Containment. Radiological release events were evaluated (Section 9.2 of NEDC–32405P) and shown to meet the criteria of 10 CFR 100 (Unit 1 FSAR Chapter 14 and Unit 2 FSAR Chapter 15).

The results of the analyses discussed above demonstrate that operation at the power uprate level does not significantly increase the probability or consequences of an accident previously evaluated.

B. The surveillance test discharge pressure for the standby liquid control pump at 41.2 gpm is increased from 1190 psig to 1201 psig. This value appears in Surveillance Requirement (SR) 3.1.7.7 and the

corresponding Bases Section B 3.1.7 in the Unit 1 and Unit 2 Technical Specifications.

Evaluation

Power uprate operation will result in a 30 psi increase in reactor operating pressure. As will be discussed in these proposed changes, several pressure-dependent setpoints (including safety relief valve [SRV] setpoints) will be increased to preserve current margins. Increasing the pressure 11 psi, at which a 41.2 gpm flow rate is developed, assures continued conformance to anticipated transient without scram (ATWS) criteria at uprated conditions. The surveillance test pressure is based on the maximum pressure for an ATWS event during the time period when the standby liquid control pump is in operation. Section 6.5 of NEDC–32405P discusses the capability of these positive displacement pumps. A small increase in the SRV setpoints will have no effect on the rated injection flow to the reactor. This change, therefore, will not increase the probability or consequences of a previously evaluated accident.

C. The reactor vessel steam dome high pressure allowable value for reactor protection system (RPS) instrumentation is increased 31 psi, consistent with the nominal pressure increase for power uprate. The allowable value appears in Section 3.3.1.1, Table 3.3.1.1–1, Function 3, in the Unit 1 and Unit 2 Technical Specifications.

Evaluation

The reactor vessel steam dome high pressure scram limit is increased because the steam dome operating pressure is increased. Operating pressure for uprated power is increased to assure that satisfactory reactor pressure control is maintained. The operating pressure was chosen on the basis of steam line pressure drop characteristics and the steam flow capability of the turbine. Satisfactory reactor pressure control requires an adequate flow margin between the uprated operating condition and the steam flow capability of the turbine control valves at their maximum stroke. An operating dome pressure of 1035 psig, which is 30 psi higher than the current operating dome pressure, is expected. Therefore, the high pressure scram is increased approximately the same amount to preserve existing margins to reactor trips.

The high pressure scram terminates a pressurization transient not terminated by direct scram or high neutron flux scram. The setting is maintained above the nominal reactor vessel operating pressure and below the specified analytical trip limit used in the safety analyses. The revised high pressure scram setpoint will preserve the hierarchy of pressure setpoints. This means that the high pressure scram setpoint will remain below the opening setpoint of the SRVs. The SRV nominal setpoints are also increased 30 psi, as discussed in Item G below. This hierarchy of setpoints provides assurance that the probability of opening more than one SRV without scram intervention is low.

Since the scram function and the current margins to trip avoidance are maintained with revised setpoints, there is no significant increase in the probability or consequences of an accident previously evaluated.

D. The ATWS reactor vessel steam dome high pressure recirculation pump trip (RPT) allowable value is raised 80 psi. The allowable value appears in Section 3.3.4.2, SR 3.3.4.2.3, in the Unit 1 and Unit 2 Technical Specifications.

Evaluation

The ATWS–RPT high pressure setpoint initiates a trip of the recirculation pumps, thereby adding negative reactivity following events in which a scram does not (but should) occur. Section 5.1.3.2 of NEDC–32405P discusses this function in detail.

The current analytical limit for the ATWS-RPT high pressure trip is 1150 psig. This value was increased 30 psi in the power uprate ATWS safety evaluations to account for the 30 psi increase in vessel operating pressure, SRV setpoints, etc. The current allowable value in the Technical Specifications is 1095 psig. This allowable value was not set by the current analytical limit, but by the range of the installed pressure instruments. As part of the power uprate plant changes, these pressure instruments will be replaced to accommodate higher pressure, and the allowable value, in conjunction with the analytical limit used in the safety analysis, will be increased.

Sections 5.1 and 9.3 of NEDC–32405P show the system can adequately perform its ATWS function with the new setpoint. Therefore, the proposed change does not cause a significant increase in the probability or consequences of an accident previously evaluated.

E. The low-low set (LLS) SRV arming pressure allowable value is increased 31 psi, consistent with the increase in operating pressure and high pressure scram allowable value. The LLS arming pressure allowable value appears in Section 3.3.6.3, Table 3.3.6.3–1, Function 1, in the Unit 1 and Unit 2 Technical Specifications.

Evaluation

The allowable value for the LLS SRV high pressure arming setpoint is increased because the high pressure scram setpoint is increased. No changes to the LLS arming logic associated with the SRV tailpipe pressure switches and the LLS opening and closing pressure setpoints are proposed.

The LLS relief logic mitigates the postulated containment loads of subsequent SRV actuations during small or intermediate loss of coolant accidents (LOCAs) by extending the time between actuations. The LLS logic requires two separate signals to arm itself for operation. Specifically, the LLS logic arms when an SRV opens (i.e., tailpipe pressure switch) and reactor pressure concurrently exceeds the scram setpoint. To preserve the hierarchy of pressure setpoints, the high pressure input to the LLS SRV arming logic has the same setpoint as the high pressure scram, thus minimizing the potential for a spurious SRV opening through the LLS logic without occurrence of a reactor scram.

Increasing the arming setpoint is consistent with increasing the high pressure scram setpoint and will not increase the probability or consequences of an accident previously evaluated.

F. Lower the permissible rod line for single-loop operation (SLO) below 45 percent core flow from the 80 percent rod line to the 76 percent rod line. This Technical Specifications limit appears in Section 3.4.1 (Figure 3.4.1–1) and the corresponding Bases Section B 3.4.1 of the Unit 1 and Unit 2 Technical Specifications.

Evaluation

During development of the generic power uprate program, GE and the NRC agreed to maintain the current exclusion region in the power-to-flow map related to thermal-hydraulic stability. The current limit for SLO is the 80 percent rod line. Power uprate will redefine 100 percent rated power and, therefore, rated rod or flow control lines. The 76 percent rod line at uprated conditions closely corresponds on an absolute, rather than percentage basis, to the existing 80 percent rod line.

Therefore, this proposed Technical Specifications change ensures that power uprate operation will not cause a significant increase in the probability or consequences of accident previously evaluated.

G. The SRV lift setpoints in the Units 1 and 2 Technical Specifications SR 3.4.3.1 will be increased 30 psi.

Evaluation

The SRVs are designed to prevent overpressurization of the reactor pressure vessel during abnormal operational transients. The SRV lift setpoints are increased to accommodate the increase in operating pressure that accompanies power uprate. The increase in SRV setpoints ensures that adequate margins are maintained so that the increase in dome pressure during normal operation does not result in an increase in the number of unnecessary SRV actuations. The setpoint increase also maintains the hierarchy of pressure setpoints described in these proposed changes. Transient evaluations include a +3 percent tolerance to the nominal setpoints. As described in Section 3.2 of NEDC–32405P, peak vessel pressure increases by 3 percent, but remains well below the 1375 psig ASME Code limit.

Although not credited in the transient analysis, GPC installed a pressure transmitter system which can electronically actuate the SRVs on high vessel pressure. The nominal trip setpoints for its actuation correspond with the nominal mechanical lift setpoints in the Technical Specifications. The SRV pressure transmitter system nominal setpoints will also be increased 30 psi.

General Electric generically evaluated the adequacy of BWR SRVs to operate at uprated temperatures and pressures. The reactor operating pressure and temperature increases of less than 40 psi and 5°F, respectively, used in that evaluation bound the uprated Hatch operating conditions.

The impact of power uprate on the Hatch containment dynamic loads due to SRV discharge has also been evaluated. As discussed in Section 4.1.2 of NEDC–32405P, the vent thrust loads with power uprate were calculated to be less than the loads used in the containment analysis. The effects of power uprate on SRV air-clearing, the

discharge line, the pool pressure boundary, and submerged structure drag loads are discussed in Section 4.1.2 of NEDC–32405P which concludes that the small increase in the setpoint pressure is well within the margin in the SRV loads defined in the Mark I Containment Long-Term Program. Therefore, power uprate does not impact the Hatch SRV load definitions used in the containment analysis, and no significant increase in the probability or consequences of an accident previously evaluated is caused by this proposed change.

H. The Limiting Condition for Operation (LCO) and SRs for the maximum reactor steam dome pressure will be increased from 1020 psig to 1058 psig. This requirement appears in LCO 3.4.10, SR 3.4.10.1, and the corresponding Bases in the Unit 1 and Unit 2 Technical Specifications.

Evaluation

As discussed in the Technical Specifications Bases and NEDC–32405P, the maximum reactor dome pressure is an initial condition of the vessel overpressure protection analysis, which assumes a fast isolation of all four main steam lines by the main steam isolation valves (MSIVs). The reactor scram signal generated directly by the valve closure is assumed defeated for this analysis. Instead, the scram signal is generated by high neutron flux. The overpressure analysis for power uprate assumed an initial dome pressure of 1058 psig, which represents an increase of 38 psig. This initial pressure was chosen approximately 2 percent above the 1035 psig steam dome operating pressure expected for power uprate operation. The analysis also included the other changes (including SRV setpoints) discussed in these proposed changes. Therefore, there is no significant increase in the probability or consequences of an accident previously evaluated.

I. The HPCI and RCIC surveillance test pressures in Units 1 and 2 Technical Specifications SRs 3.5.1.8 and 3.5.3.3, respectively, are increased 38 psi.

Evaluation

The allowable HPCI and RCIC surveillance test pressure is increased to correspond with the increase in normal reactor operating pressure and LCO/SR on maximum reactor pressure that accompanies power uprate. (As discussed in Item H above, the LCO on reactor steam dome pressure is increased 38 psi.) The change is needed to ensure that pressure and power reductions are not required to perform surveillance testing. The requested changes will allow the quarterly demonstration of the HPCI and RCIC systems' capability to perform at normal reactor operating pressures, which meets the original intent of the Technical Specifications.

The HPCI and RCIC systems have been evaluated and demonstrated to be capable of injecting design flow rate at the higher reactor pressure as discussed in Sections 4.2 and 3.8 of NEDC–32405P and in Reference 2.

Therefore, these changes will ensure that power uprate operation will not cause a significant increase in the probability or consequences of an accident previously evaluated.

J. Bases Changes

Several changes to the Hatch Units 1 and 2 Technical Specifications Bases are proposed for consistency with the power uprate safety analyses. These proposed changes are in addition to the Bases changes corresponding to proposed changes A through I.

i. The main steam line flow differential pressure setpoints (Bases Section B 3.3.6.1.c) and the HPCI/RCIC high flow differential pressure setpoints (Bases Section B 3.3.6.3.a and B 3.3.6.4.a) are changed for both units.

The allowable values (in percent of rated) will not change for power uprate operation. However, the actual differential pressure will change due to the increase in steam flow and pressure.

ii. The HPCI and RCIC upper design pressure in Bases Sections B 3.5.1 and B 3.5.3, respectively, is increased 34 psi for both units

The Bases changes support the design of these high pressure systems to pump rated flow from approximately 150 psig up to a pressure associated with the first group of SRV setpoints. This proposed design pressure conservatively considers the 30 psi higher nominal setpoints and 3 percent setpoint drift. The capability of the HPCI and RCIC systems to deliver design flows at these pressures is discussed in Reference 2, and was reviewed by GE for the Unit 1 and Unit 2 systems.

Note that the upper design pressure for HPCI and RCIC is different from the surveillance test pressure for HPCI and RCIC discussed previously in item I. The maximum surveillance test pressure corresponds to reactor operating pressure, since the surveillance test is performed when the unit is operating. The HPCI and RCIC upper design pressure reflects the capability to inject water to the vessel following a reactor scram and isolation.

iii. The peak post accident containment pressure (P_a) is changed to 49.6 psig (Unit 1) and 45.5 psig (Unit 2). These values appear in Bases Sections B 3.6.1.1, B 3.6.1.2, and B 3.6.1.4 in each unit's Technical Specifications.

Section 4.1.1.3 of NEDC–32405P discusses the peak short-term containment pressure response which was recalculated for power uprate conditions. Containment pressure and temperatures remain below design limits and are essentially unchanged.

iv. The main condenser offgas gross gamma activity rate limit of 240 mci/second will not be changed for power uprate. A statement that the current limit is conservative for power uprate conditions was added to Bases Section 3.7.6 for both units.

The Bases derive the current 240 mci/second limit using a rated core thermal power limit of 2436 MWt. A slightly higher limit could be justified using the uprated power level. However, adequate margin exists with the current limit.

v. The inservice hydrostatic and leak testing pressures shown in Bases Section 3.10.1 are increased 33 psi and 30 psi, respectively. This change affects each unit's Bases.

This change is a direct result of the 30 psi increase in normal operating pressure proposed for power uprate. The leakage test is normally performed at operating pressure and the hydrostatic test at approximately 110 percent of operating pressure.

The above Bases changes Items i–v have been evaluated and will not increase the probability or consequences of an accident previously evaluated.

2. Will the changes create the possibility of a new or different kind of accident from any accident previously evaluated?

Evaluation

The Operating License changes in power level and the associated Technical Specifications changes discussed previously will not create the possibility of a new or different kind of accident from any accident previously evaluated, as summarized below.

Equipment that could be affected by power uprate was evaluated. No new operating mode, safety-related equipment lineup, accident scenario, or equipment failure mode were identified. The full spectrum of accident considerations defined in RG 1.70 was evaluated, and no new or different kind of accident was identified. Uprate uses already-developed technology and applies it within the capabilities of existing plant equipment in accordance with presently existing regulatory criteria to include NRC-approved codes, standards, and methods. GE has designed BWRs of higher power levels than the uprated power of any of the currently operating BWR fleet, and no new power dependent accidents have been identified.

The Technical Specifications changes required to implement power uprate require only minor modifications to the plant's configuration. All changes were evaluated and found to be acceptable.

3. Will the changes involve a significant reduction in the margin of safety?

A. Rated Thermal Power is increased to 2558 MWt on page 3 of the Unit 1 Operating License, page 4 of the Unit 2 Operating License, and in Section 1.1 (Definitions) of the Unit 1 and Unit 2 Technical Specifications.

Evaluation

The events analyzed in the FSAR were re-evaluated to demonstrate that power uprate can be implemented without exceeding any regulatory limit. Because the applicable safety analysis criteria and limits are satisfied for power uprate, the margin of safety associated with the safety limits and other limits identified in the Technical Specifications will be maintained.

As discussed in NEDC–32405P, the safety margins prescribed by the Code of Federal Regulations are maintained by meeting the appropriate regulatory criteria. Similarly, the margins provided by the application of the ASME design criteria are maintained. Section 11.4.2 of NEDC–32405P discusses the effects of power uprate on safety margins for the following:

Fuel thermal limits Design basis accidents and the challenges to fuel, containment, and radiological releases. Transient analyses. Non-LOCA radiological releases. Environmental consequences.

These evaluations conclude that applicable safety analysis criteria and limits are

satisfied, and thus, the margin of safety will not be significantly reduced.

B. The surveillance test discharge pressure for the SLC pump at 41.2 gpm is increased from 1190 psig to 1201 psig. This value appears in SR 3.1.7.7 and corresponding Bases Section B 3.1.7 in the Unit 1 and Unit 2 Technical Specifications.

Evaluation

Power uprate operation will result in a 30 psi increase in reactor operating pressure. Several pressure-dependent setpoints (including SRV setpoints) will be increased to preserve current margins. Increasing the pressure 11 psi, at which a 41.2 gpm flow rate is developed, assures continued conformance to ATWS criteria at uprated conditions. The surveillance test pressure is based on the maximum pressure for an ATWS event during the time period when the SLC pump is in operation. Section 6.5 of NEDC–32405P discusses the capability of these positive displacement pumps. A small increase in the SRV setpoints will have no effect on the rated injection flow to the reactor.

For power uprate, the capability of the SLCS to respond with adequate margin to an ATWS event was confirmed. The results are reported in Section 9.3.1 of NEDC–32405P. The limiting ATWS event was an inadvertent MSIV closure. The event was reanalyzed at uprate conditions with the higher SRV setpoints and ATWS-RPT setpoints. Peak vessel pressure was well below the ASME emergency limit of 1500 psig. The effect of power uprate on peak clad temperature and maximum suppression pool temperature was judged to be negligible, because the calculations showed no increase in fuel surface heat flux or integrated SRV flow.

In summary, all ATWS criteria are satisfied and the SLC pumps are capable of injecting the required amounts of sodium pentaborate at uprated conditions. Therefore, there is no significant decrease in the margin of safety.

C. The reactor vessel steam dome high pressure allowable value for RPS instrumentation is increased 31 psi, consistent with the nominal pressure increase for power uprate. The allowable value appears in Section 3.3.1.1, Table 3.3.1.1–1, Function 3, in the Unit 1 and Unit 2 Technical Specifications.

Evaluation

The reactor vessel steam dome high pressure scram limit is increased because the steam dome operating pressure is increased. Operating pressure for uprated power is increased to assure that satisfactory reactor pressure control is maintained. The operating pressure was chosen on the basis of steam line pressure drop characteristics and the steam flow capability of the turbine. Satisfactory reactor pressure control requires an adequate flow margin between the uprated operating condition and the steam flow capability of the turbine control valves at maximum stroke. An operating dome pressure of 1035 psig, which is 30 psi higher than the current operating dome pressure, is expected. Therefore, the high pressure scram is increased approximately the same amount to preserve existing margins to reactor trips.

The increases in the steam dome high pressure scram instrument setpoints for uprated power were evaluated by determining whether the high pressure scram, which is used as a backup to other scram signals, provides adequate overpressure protection. The evaluation demonstrates that the backup protection function, with the revised setpoints, continues to provide adequate overpressure protection at uprated power conditions by meeting the applicable ASME Code criteria. Therefore, there is no significant decrease in the margin of safety.

D. The ATWS reactor vessel steam dome high pressure RPT allowable value is raised 80 psi. The allowable value appears in Section 3.3.4.2, SR 3.3.4.2.3, in the Unit 1 and Unit 2 Technical Specifications.

Evaluation

The ATWS-RPT high pressure setpoint initiates a trip of the recirculation pumps, thereby adding negative reactivity following events in which a scram does not (but should) occur. Section 5.1.3.2 of NEDC–32405P discusses this function in detail.

For power uprate, the capability of the SLCS to respond to a postulated ATWS event with adequate margin was confirmed (Section 9.3.1 of NEDC–32405P). By reducing reactor power until the SLCS can inject the required amounts of sodium pentoborate to achieve full shutdown, the RPT also reduces suppression pool temperature for isolation cases (also shown to be acceptable for power uprate conditions in Section 9.3.1 of NEDC–32405P). Therefore, there is no significant decrease in a margin of safety.

E. The LLS SRV arming pressure allowable value is increased 31 psi, consistent with the increase in operating pressure and high pressure scram allowable value. The LLS arming pressure allowable value appears in Section 3.3.6.3, Table 3.3.6.3–1, Function 1, in the Unit 1 and Unit 2 Technical Specifications.

Evaluation

The allowable value for the LLS SRV high pressure arming setpoint is increased, because the high pressure scram setpoint is increased. No changes to the LLS arming logic associated with the SRV tailpipe pressure switches, and the LLS opening and closing pressure setpoints are proposed.

Since this proposed change only affects one of two arming signals for LLS, the safety analyses are not affected; therefore, there is not a significant change in the margin of safety.

F. Lower the permissible rod line for SLO below 45 percent core flow from the 80 percent rod line to the 76 percent rod line. This Technical Specifications limit appears in Section 3.4.1 (Figure 3.4.1–1) and corresponding Bases Section B 3.4.1 of the Unit 1 and Unit 2 Technical Specifications.

Evaluation

This change to the power versus flow map restricted zone is made to maintain the same operating constraints and stability margin that were established for the current power level. This change avoids any increase in the possibility of occurrence or any increase in the potential effects of power oscillations. Therefore, there is no significant decrease in a margin of safety.

G. The SRV lift setpoints in Surveillance Requirement 3.4.3.1 (both units) will be increased 30 psi.

Evaluation

The SRVs are designed to prevent overpressurization of the reactor pressure vessel during abnormal operational transients. The SRV lift setpoints are increased to accommodate the increase in operating pressure that accompanies power uprate. The increase in SRV setpoints ensures that adequate margins are maintained so that the increase in dome pressure during normal operation does not result in an increase in the number of unnecessary SRV actuations. The setpoint increase also maintains the hierarchy of pressure setpoints described in these proposed changes. Transient evaluations include a + 3 percent tolerance to the nominal setpoints. As described in Section 3.2 of NEDC–32405P, peak vessel pressure increases by 3 percent but remains well below the 1375 psig ASME Code limit. Therefore, there is no significant decrease in the margin of safety.

H. The Limiting Condition for Operation (LCO) and Surveillance Requirements for the maximum reactor steam dome pressure will be increased from 1020 psig to 1058 psig. This requirement appears in LCO 3.4.10, SR 3.4.10.1, and the corresponding Bases in the Unit 1 and Unit 2 Technical Specifications.

Evaluation

As discussed in the Technical Specifications Bases and in Section 3.2 of NEDC–32405P, the maximum reactor dome pressure is an initial condition of the vessel overpressure protection analysis, which assumes a fast isolation of all four main steam lines by the main steam isolation valves. It is also used as a sensitivity study parameter for certain transient and LOCA events.

With this revised limit, peak vessel pressure remains below ASME Code criteria, transient limits are maintained, and LOCA fuel performance satisfies the requirements of 10 CFR 50.46 and 10 CFR 50, Appendix K. Therefore, there is no significant decrease in a margin of safety.

I. The HPCI and RCIC surveillance test pressures in SRs 3.5.1.8 and 3.5.3.3, respectively, (both units) are increased 38 psi.

Evaluation

The allowable HPCI and RCIC surveillance test pressure is increased to correspond with the increase in normal reactor operating pressure and LCO/SR on maximum reactor pressure that accompanies power uprate. (As discussed previously, the LCO on reactor steam dome pressure is increased 38 psi.)

The purpose of the HPCI and RCIC surveillance test is to provide periodic demonstration of the systems' ability to perform consistent with the requirements of the analyses at the higher operating pressure associated with power uprate conditions. An evaluation of the HPCI and RCIC systems confirmed their ability to operate at slightly higher turbine speed and provide design flow

at power uprate conditions. System performance will be confirmed during the initial power ascension to uprated conditions (and periodically thereafter per the Technical Specifications). Therefore, there is no significant decrease in the margin of safety.

J. Bases Changes

Several changes to the Hatch Units 1 and 2 Technical Specifications Bases are proposed for consistency with the power uprate safety analyses. These proposed changes are in addition to the Bases changes corresponding to proposed changes A through I.

i. The main steam line flow differential pressure setpoints, as shown in Bases Section B 3.3.6.1.c, and the HPCI/RCIC high flow differential pressure setpoints (Units 1 and 2 Bases Sections B 3.3.6.3.a and B 3.3.6.4.a) are changed.

The allowable values (in percent of rated) will not change for power uprate operation. However, the actual differential pressure will change due to the increase in steam flow and pressure.

ii. The HPCI and RCIC upper design pressure in Units 1 and 2 Bases Sections B 3.5.1 and B 3.5.3, respectively, is increased 34 psi.

The Bases changes support the design of these high pressure systems to pump rated flow from approximately 150 psig up to a pressure associated with the first group of SRV setpoints. This proposed design pressure conservatively considers the 30 psi higher nominal setpoints and 3 percent setpoint drift. The capability of the Unit 1 and Unit 2 HPCI and RCIC systems to deliver design flows at these pressures was reviewed by GE and is discussed in Reference 2.

iii. The peak post accident containment pressure (P_a) is changed to 49.6 psig (Unit 1) and 45.5 psig (Unit 2). These values appear in Units 1 and 2 Bases Sections B 3.6.1.1, B 3.6.1.2, and B 3.6.1.4.

Section 4.1.1.3 of NEDC–32405P discusses the peak short-term containment pressure response which was recalculated for power uprate conditions. Containment pressure and temperatures remain below design limits and are essentially unchanged.

iv. The main condenser offgas gross gamma activity rate limit of 240 mci/second will not be changed for power uprate. A statement that the current limit is conservative for power uprate conditions was added to Units 1 and 2 Bases Section 3.7.6.

The Bases derive the current 240 mci/second limit using a rated core thermal power limit of 2436 MWt. A slightly higher limit could be justified using the uprated power level. However, adequate margin exists with the current limit.

v. The inservice hydrostatic and leak testing pressures shown in Units 1 and 2 Bases Section 3.10.1 are increased 33 psi and 30 psi, respectively.

This change is a direct result of the 30 psi increase in normal operating pressure proposed for power uprate. The leakage test is normally performed at operating pressure and the hydrostatic test at approximately 110 percent of operating pressure.

The above Bases changes i–v were evaluated, and there is no significant decrease in the margin of safety.

The NRC staff has reviewed the licensee's analysis and, based on this review, it appears that the three standards of 10 CFR 50.92(c) are satisfied. Therefore, the NRC staff proposes to determine that the amendment request involves no significant hazards consideration.

Local Public Document Room location: Appling County Public Library, 301 City Hall Drive, Baxley, Georgia 31513.

Attorney for licensee: Ernest L. Blake, Jr., Esquire, Shaw, Pittman, Potts and Trowbridge, 2300 N Street, NW., Washington, DC 20037.

NRC Project Director: Herbert N. Berkow.

Georgia Power Company, Oglethorpe Power Corporation, Municipal Electric Authority of Georgia, City of Dalton, Georgia, Docket No. 50–366, Edwin I. Hatch Nuclear Plant, Unit 2, Appling County, Georgia

Date of amendment request: April 14, 1995.

Description of amendment request: The licensee proposes to revise Plant Hatch Unit 2 Technical Specifications (TS) to eliminate selected response time testing requirements from the TS. Specifically, the response time testing to be eliminated includes sensors and specified loop instrumentation for: (1) the Reactor Protection System, (2) the Isolation System, and (3) the Emergency Core Cooling System (ECCS). The deletion of instrumentation from the ECCS response time testing necessitates moving the remaining portion of the test to the ECCS system TS. In addition, the Note for Surveillance Requirement 3.3.6.1.7, which reads: ''Radiation detectors may be excluded,'' is being removed since response time testing is not required for any radiation detector that provides a primary containment isolation signal as indicated in Table 3.3.6.1–1.

Proposed TS Changes 1, 2, and 3 are supported by an analysis performed by the BWR Owners' Group (BWROG), with the licensee's participation. The analysis was submitted to the NRC for approval as Topical Report NEDO–32291, ''System Analyses for the Elimination of Selected Response Time Testing Requirements,'' Boiling Water Reactor Owners' Group, January 1994. The NRC approved the Topical Report by a Safety Evaluation Report (SER) issued on December 28, 1994, ''Evaluation of Boiling Water Reactor Owners' Group Topical Report NEDO–32291, System Analyses for the Elimination of Selected Response Time Testing Requirements.'' The BWROG analysis demonstrates that other periodic tests required by TS, such as channel calibrations, channel checks, channel functional tests, and logic system functional tests, ensure that instrument response times are within acceptable limits. The applicability of the referenced analysis to Plant Hatch has been verified. Proposed Change 4 removes an unnecessary note, since no functions subject to this surveillance include radiation monitors.

Basis for proposed no significant hazards consideration determination: As required by 10 CFR 50.91(a), the licensee has provided its analysis of the issue of no significant hazards consideration which is presented below:

Basis for Proposed Changes 1, 2, and 3

1. The changes do not involve a significant increase in the probability or consequences of an accident previously evaluated. The purpose of the proposed changes is to eliminate response time testing requirements for selected instrumentation in the RPS [Reactor Protection System], Isolation System], and ECCS. However, because of the continued application of other existing Technical Specifications requirements, such as channel calibrations, channel checks, channel functional tests, and logic system functional tests, the response time of these systems will be maintained within the acceptance limits assumed in plant safety analyses. This will assure successful mitigation of an initiating event. The proposed Technical Specifications changes do not affect the capability of the associated systems to perform their intended function within their required response time.

The BWR Owners' Group (BWROG) has documented an evaluation in NEDO–32291, ''System Analyses for Elimination of Selected Response Time Testing Requirements,'' which was submitted to the NRC for review and approval as a Topical Report in January 1994 and subsequently approved by an NRC SER in December 1994. This evaluation demonstrates that response time testing is redundant to the other Technical Specifications requirements listed in the preceding paragraph. These other tests are sufficient to identify failure modes or degradation in instrument response time and ensure operation of the associated systems within acceptance limits. There are no known failure modes that can be detected by response time testing that cannot also be detected by the other Technical Specifications tests.

2. The proposed changes will not create the possibility of a new or different kind of accident from any accident previously analyzed. As discussed above, the proposed Technical Specifications changes do not affect the capability of the associated systems to perform their intended function within the acceptance limits assumed in plant safety analyses.

3. The proposed changes do not involve a significant reduction in the margin of safety. The current Technical Specifications response times are based on the maximum allowable values assumed in the plant safety

analyses, which conservatively establish the margin of safety. As described above, the proposed Technical Specifications changes do not affect the capability of the associated systems to perform their intended function within the allowed response time used as the basis for the plant safety analyses. Plant and system responses to an initiating event will remain in compliance with the assumptions of the safety analyses; therefore, the margin of safety is not affected.

Although not explicitly evaluated, the proposed Technical Specifications changes enhance plant safety and operation by:

a. Reducing the time safety systems are unavailable,

b. Reducing safety system actuations,

c. Reducing shutdown risk,

d. Limiting radiation exposure to plant personnel, and

e. Eliminating the diversion of key personnel to conduct unnecessary testing.

Basis for Proposed Change 4

1. The change does not involve a significant increase in the probability or consequences of an accident previously evaluated. The Note for SR 3.3.6.1.7 indicates that response time testing for radiation detectors that provide primary containment isolation signals as indicated in Table 3.3.6.1–1 is not required. However,

Table 3.3.6.1–1 does not reference SR 3.3.5.1.7 for any radiation detector that provides primary containment isolation signals. The proposed change eliminates the potential for confusion during instrumentation surveillance testing. Deletion of the note will not prevent the radiation detectors from performing their intended function and will not affect the results of any accident analysis.

2. The proposed changes will not create the possibility of a new or different kind of accident from any accident previously analyzed. As discussed above, the proposed Technical Specifications change eliminates the potential for confusion during instrumentation surveillance testing. This change does not modify any plant equipment or change any plant procedure that provides instructions for the operation of plant equipment. Therefore, the proposed change will not create the possibility of a new or different kind of accident from any previously analyzed.

3. The proposed change does not involve a significant reduction in the margin of safety. The Note that is being deleted by the change states that testing is not required for instrument sensors which is not required by the SR. Therefore, the Note is superfluous and could cause confusion during instrumentation surveillance testing. The proposed change eliminates that potential. This change is conservative, since it deletes a statement that was intended to reduce the amount of surveillance testing performed on certain instrumentation. The proposed change does not affect plant equipment, procedures, or radiation release prevention and mitigating functions. Therefore, the proposed change does not involve a significant reduction in the margin of safety.

The NRC staff has reviewed the licensee's analysis and, based on this review, it appears that the three standards of 10 CFR 50.92(c) are satisfied. Therefore, the NRC staff proposes to determine that the amendment request involves no significant hazards consideration.

Local Public Document Room location: Appling County Public Library, 301 City Hall Drive, Baxley, Georgia 31513.

Georgia Power Company, Oglethorpe Power Corporation, Municipal Electric Authority of Georgia, City of Dalton, Georgia, Docket Nos. 50–424 and 50–425, Vogtle Electric Generating Plant, Units 1 and 2, Burke County, Georgia

Date of amendment request: March 17, 1995.

Description of amendment request: The amendments would revise Technical Specification (TS) 3.9.4, Containment Building Penetrations, to allow the personnel airlock to be open during core alterations or movement of irradiated fuel within the containment.

Basis for proposed no significant hazards consideration determination: As required by 10 CFR 50.91(a), the licensee has provided its analysis of the issue of no significant hazards consideration, which is presented below:

1. The proposed change to the Technical Specifications does not involve a significant increase in the probability or consequences of an accident previously evaluated. The proposed change to Specification 3.9.4 would allow the containment personnel airlock (PAL) to be open during fuel movement and core alterations. The PAL is currently closed during fuel movement and core alterations to prevent the escape of radioactive material in the event of a fuel handling accident. The PAL is not an initiator to any accident. Whether the PAL doors are opened or closed during fuel movement or core alterations has no effect on the probability of any accident previously evaluated.

Allowing the PAL doors to be open during fuel movement and core alterations does increase the consequences of a fuel handling accident in the containment from essentially no offsite dose release to an estimated release of 65.6 rem to the thyroid and 0.28 rem to the whole body. However, the calculated offsite dose release is lower than the case analyzed in the FSAR [Final Safety Analysis Report] for an accident in the Spent Fuel Pool, with no filtration of the resulting release. In addition, the calculated doses are larger than the expected doses because the calculation does not incorporate the closing of the PAL door after the containment is evacuated. Closing the airlock door within 15 minutes results in a calculated offsite dose of 8.2 rem to the thyroid and 0.025 rem whole body. The projected dose to control room operators was reviewed and the projected dose remained below SRP acceptance limits as long as control room emergency ventilation was established within 7 minutes. It was assumed the individual assigned to close the airlock doors remained stationed at the airlock for 15 minutes. A best estimate dose analysis indicated this individual could be expected to receive 5.6 rem to the thyroid and 0.15 rem whole body. The proposed change will significantly reduce the dose to other workers in the containment in the event of a fuel handling accident by speeding the containment evacuation process. The proposed change will also significantly decrease the wear on the PAL doors and, consequently, increase the availability of the PAL doors in the event of an accident.

Therefore, the proposed change does not involve a significant increase in the probability or consequences of an accident previously evaluated.

2. The proposed change to the Technical Specifications does not create the possibility of a new or different kind of accident from any accident previously evaluated because the proposed change affects a previously evaluated accident, e.g., a fuel handling accident. It does not represent a significant change in the configuration or operation of the plant and, therefore, does not create the possibility of a new or different type of accident from any accident previously evaluated.

3. The proposed change to the Technical Specifications does not involve a significant reduction in a margin of safety. The margin of safety as defined by 10 CFR Part 100 for a fission product release is 300 rem thyroid and 25 rem whole body for an individual exposed at the site boundary for two hours. The analysis shows values that are well below the acceptance limits. In fact, the margin remains essentially the same as previously evaluated by the NRC. There is no increase in calculated offsite dose resulting from a fuel handling accident. Therefore, the proposed change does not involve a significant reduction in a margin of safety.

Based upon the preceding information, it has been determined that the proposed Technical Specifications addition does not involve a significant hazards consideration as defined by 10 CFR 50.92.

The NRC staff has reviewed the licensee's analysis and, based on this review, it appears that the three standards of 10 CFR 50.92(c) are satisfied. Therefore, the NRC staff proposes to determine that the amendment request involves no significant hazards consideration.

Local Public Document Room location: Burke County Public Library, 412 Fourth Street, Waynesboro, Georgia 30830.

Attorney for licensee: Mr. Arthur H. Domby, Troutman Sanders, NationsBank Plaza, Suite 5200, 600 Peachtree Street, NE., Atlanta, Georgia 30308.

NRC Project Director: Herbert N. Berkow.

Georgia Power Company, Oglethorpe Power Corporation, Municipal Electric Authority of Georgia, City of Dalton, Georgia, Docket Nos. 50–424 and 50–425, Vogtle Electric Generating Plant, Units 1 and 2, Burke County, Georgia

Date of amendment request: May 12, 1995.

Description of amendment request: The proposed amendments would revise the Technical Specifications (TS) to support a one-time exemption from the requirement of Section III.D.1(a) of 10 CFR Part 50, Appendix J, and any other future Appendix J exemptions that may be approved by the NRC for Vogtle, Unit 1. Specifically, the TS change would insert the words ''Except as modified by NRC approved exemptions'' at the beginning of the first sentence of TS Surveillance Requirement 4.6.1.2.

Basis for proposed no significant hazards consideration determination: As required by 10 CFR 50.91(a), the licensee has provided its analysis of the issue of no significant hazards consideration, which is presented below:

1. The change does not involve a significant increase in the probability or consequences of an accident previously evaluated. The proposed change does not involve a change to structures, systems, or components which would affect the probability of an accident previously evaluated in the Vogtle Electric Generating Plant (VEGP) Final Safety Analysis Report (FSAR). The change only provides a mechanism for implementing exemptions to 10 CFR 50, Appendix J containment leak rate testing criteria which have been approved by the NRC.

2. The proposed change will not create the possibility of a new or different kind of accident from any accident previously analyzed. The amendment would not change the design, configuration, or method of plant operation. It only allows exemption to specific 10 CFR 50, Appendix J criteria as previously approved by the NRC.

3. Operation of VEGP, Unit 1 in accordance with the proposed change will not involve a significant reduction in the margin of safety. The proposed change would not, in itself, change a safety limit, an LCO, or a surveillance requirement on equipment required for plant operation. Before the change could be used an exemption to 10 CFR 50, Appendix J would have to be evaluated and approved by the NRC. The change only provides a way to implement NRC approved exemptions without violating the Technical Specifications.

The NRC staff has reviewed the licensee's analysis and, based on this review, it appears that the three standards of 10 CFR 50.92(c) are satisfied. Therefore, the NRC staff proposes to determine that the amendment request involves no significant hazards consideration.

Local Public Document Room location: Burke County Public Library, 412 Fourth Street, Waynesboro, Georgia 30830.

GPU Nuclear Corporation, et al., Docket No. 50–289, Three Mile Island Nuclear Station, Unit No. 1, Dauphin County, Pennsylvania

Date of amendment request: June 1, 1995.

Description of amendment request: The proposed license amendment would revise the Technical Specifications (T.S.) for Three Mile Island Nuclear Station, Unit 1 (TMI–1) to delete the remaining portions of the TMI–1 Radiological Effluent Technical Specifications (RETS) and relocate them in accordance with the guidance contained in the Generic Letter 89–01 (GL 89–01) and NUREG–1430. The proposed change would also modify the Radiation Monitoring Systems surveillance requirements to specify only those radiation monitors that have Limiting Conditions for Operation (LCO), and revise some of the calibration frequencies.

Basis for proposed no significant hazards consideration determination: As required by 10 CFR 50.91(a), the licensee has provided its analysis of the issue of no significant hazards consideration which is presented below:

1. Operation of the facility in accordance with the proposed amendment would not involve a significant increase in the probability of occurrence or the consequences of an accident previously evaluated. The proposed amendment allows relocation of the remaining RETS to the ODCM [Offsite Dose Calculation Manual] according to the guidance contained in GL 89–01 and NUREG–1430. This proposal simplifies the RETS, meets the regulatory requirements for radioactive effluent controls and radiological environmental monitoring, and is provided as a line-item improvement of the T.S.

In addition, this proposed amendment specifies surveillance requirements only for those radiation monitors that have an LCO or specified operability requirements. The radiation monitors that are currently included in the T.S. surveillance program but have no associated LCO or specified operability requirement will be placed in the PM [preventive maintenance] program.

Finally, the proposed amendment extends the interval between successive calibration surveillances for those radiation monitors evaluated herein. This change does not involve any change to the actual surveillance requirements, nor does it involve any change to the limits or restrictions on plant operations. The reliability of systems and components relied upon to prevent or mitigate the consequences of accidents previously evaluated is not degraded beyond that obtained from the currently defined quarterly interval. Assurance of system and equipment availability is maintained.

This change does not involve any change to system or equipment configuration. Therefore, this change does not significantly increase the probability of occurrence or the consequences of an accident previously evaluated.

2. Operation of the facility in accordance with the proposed amendment would not create the possibility of a new or different kind of accident from any accident previously evaluated.

The proposal in part relocates procedural details, currently included in the T.S., on radioactive effluents to the ODCM. Future changes to these procedural details in the ODCM will be handled under the administrative controls for changes to the ODCM.

In addition, this proposed amendment specifies surveillance requirements only for those radiation monitors that have an LCO or specified operability requirements. The radiation monitors that are currently included in the T.S. surveillance program but have no associated LCO or specified operability requirement will be placed in the PM program.

Finally, the proposed amendment extends the interval between successive calibration surveillances for those radiation monitors evaluated herein. This change does not involve any change to the actual surveillance requirements, nor does it involve any change to the limits and restrictions on plant operations. This change does not involve any change to system or equipment configuration.

Therefore, this change is unrelated to the possibility of creating a new or different kind of accident from any previously evaluated.

3. Operation of the facility in accordance with the proposed amendment would not involve a significant reduction in a margin of safety.

The procedural details being relocated to the ODCM are consistent with the guidance provided in GL 89–01 and NUREG–1430.

In addition, this proposed amendment specifies surveillance requirements only for those radiation monitors that have an LCO or specified operability requirements. The radiation monitors that are currently included in the T.S. surveillance program but have no associated LCO or specified operability requirement will be placed in the PM program.

Finally, the proposed amendment extends the interval between successive calibration surveillances for those radiation monitors evaluated herein. This change does not involve any change to the actual surveillance requirements, nor does it involve any change to the limits and restrictions on plant operations. The reliability of the radiation monitors is not significantly degraded beyond that obtained from the currently defined surveillance interval. Assurance of system availability is maintained.

Therefore, it is concluded that operation of the facility in accordance with the proposed amendment does not involve a significant reduction in a margin of safety.

The NRC staff has reviewed the licensee's analysis and, based on this

review, it appears that the three standards of 10 CFR 50.92(c) are satisfied. Therefore, the NRC staff proposes to determine that the amendment request involves no significant hazards consideration.

Local Public Document Room location: Law/Government Publications Section, State Library of Pennsylvania, (REGIONAL DEPOSITORY) Walnut Street and Commonwealth Avenue, Box 1601, Harrisburg, PA 17105.

Attorney for licensee: Ernest L. Blake, Jr., Esquire, Shaw, Pittman, Potts & Trowbridge, 2300 N Street, NW., Washington, DC 20037.

NRC Project Director: Phillip F. McKee.

Gulf States Utilities Company, Cajun Electric Power Cooperative, and Entergy Operations, Inc., Docket No. 50–458, River Bend Station, Unit 1, West Feliciana Parish, Louisiana

Date of amendment request: May 30, 1995.

Description of amendment request: The proposed amendment would revise the technical specifications (TS) to increase the surveillance test period for the containment integrated leak rate test (ILRT) from 40 plus or minus 10 months to every 10 years based on past performance. The change would also require testing on a more frequent basis if any test failures were to occur and to return to the 10 year period with subsequent performance improvements.

Basis for proposed no significant hazards consideration determination: As required by 10 CFR 50.91(a), the licensee has provided its analysis of the issue of no significant hazards consideration, which is presented below:

(1) The proposed change does not involve a change to the plant design or operation. As a result, the proposed change does not affect any of the parameters or conditions that contribute to initiation of any accidents previously evaluated. Thus, the proposed change cannot increase the probability of any accident previously evaluated. The proposed change potentially affects the leak tight integrity of the containment structure designed to mitigate the consequences of a loss of coolant accident (LOCA). The function of the containment is to maintain functional integrity during and following the peak transient pressures and temperatures which result from any loss of coolant accident (LOCA). The containment is designed to limit fission product leakage following the design basis LOCA and analyses demonstrate that these offsite doses are less than those allowed under 10CFR100 design limits of 15 psig and 185 °F. Because the proposed change does not alter the plant design, only the frequency of measuring containment leakage, the proposed change does not directly result in an increase in containment leakage. However, decreasing the test frequency can increase the probability that a large increase in containment leakage could go undetected for an extended period of time. These leakage paths include potential cracks in the containment structure and various penetrations through the containment structure. Based upon the results of the structural integrity test conducted as part of the preoperational or preservice test program and the periodic containment and drywell structural integrity surveillance tests, additional cracking of the containment is not expected during the remaining life to the plant. Ventilation and piping penetrations are designed with two isolation valves in series with one valve in the drywell and another either outside primary containment or in the wetwell. High energy lines that extend into the wetwell, such as the Main Steam and Feedwater lines, are encapsulated by guard pipes to direct energy to the drywell in case of a piping rupture.

Electrical penetrations are sealed with a high strength/density material that will prevent leakage as well as provide radiation shielding. The TS ILRT acceptance criterion of 0.75 L_a [maximum allowable leakage rate at the calculated maximum accident pressure, P_a] provides margin for degradation. Containment performance data to date suggests that containment degradation, even during a ten (10) year interval between tests, will not exceed this margin.

Based on the above, EOI [Entergy Operations, Inc.] has concluded that the proposed change will not result in a significant increase in the probability or consequences of any accident previously evaluated.

(2) The proposed change does not involve a change to the plant design or operation. As a result, the proposed change does not affect any of the parameters or conditions that could contribute to initiation of any accidents. This change involves the reduction in the Integrated Leak Rate Test frequency. The method of performing the test is not changed. No new accident modes are created by extending the testing intervals. No safety-related equipment or safety functions are altered as a result of this change. Extending the test frequency has no influence on, nor does it contribute to, the possibility of a new or different kind of accident or malfunction from those previously analyzed. Based upon the above, EOI has concluded that the proposed change will not create the possibility or a new or different kind of accident previously evaluated.

(3) The proposed change only affects the frequency of measuring containment leakage and does not change the leakage rate limit. However, the proposed change can increase the probability that a large increase in containment leakage could go undetected for an extended period of time. Operational experience has shown that the leak tightness of the containment has been maintained significantly below the allowable leakage limit. In fact, an analysis was conducted to determine the potential risk to the public from the proposed change. Based on this analysis, under several different accident scenarios, the risk of radioactivity release from containment was found to be negligible.

The margin of safety that has the potential of being impacted by the proposed change involves the offsite dose consequences of postulated accidents which are directly related to containment leakage rate. The containment isolation system is designed to limit leakage to L_a which is defined by the RBS Technical Specifications to be 0.26 percent by weight of the containment air per 24 hours at 7.6 psig (P_a). The limitation on containment leakage rate is designed to ensure that total leakage volume will not exceed the value assumed in the accident analyses at the peak accident pressure (P_a) or 7.6 psig.

To provide additional conservatism, the measured overall integrated leakage rate is further limited to less than or equal to 0.75 L_a during performance of the periodic Integrated Leak Rate Test and to less than or equal to 0.60 L_a (total combined leakage) for Type B and C leak rate tests. This is done to account for the possible degradation of the containment leakage barriers between tests. These acceptance criteria ensure that an acceptable margin of safety is being maintained and will not be altered by the proposed change. The preservation of this margin will continue to provide for potential degradation of the leakage barriers between tests. RBS [River Bend Station] presently has on docket with the staff a submittal (reference RBG–41133, Rev. 1 to LAR 93–14 dated January 18, 1995) that allows the acceptance criteria, between required leakage rate tests, to be less than or equal to 1.0 L_a since at less than or equal to 1.0 L_a, the offsite does consequences are bounded by the assumptions of safety analysis.

No change in the method of testing is being proposed. The Type A test will continue to be done at full pressure (P_a) or greater. Primary containment penetrations which require Type B or C leak tests will be performed in the same manner as before. Other programs are in place to ensure that proper maintenance and repairs are performed during the service life of the primary containment and systems and components penetrating the primary containment.

No change in the RBS allowable leakage rate is being proposed. These conservative leakage rates ensure that the containment leakage remains low. As a result, EOI has concluded that the proposed change will not result in a significant reduction in the margin of safety.

The NRC staff has reviewed the licensee's analysis and, based on this review, it appears that the three standards of 10 CFR 50.92(c) are satisfied. Therefore, the NRC staff proposes to determine that the amendment request involves no significant hazards consideration.

Local Public Document Room location: Government Documents Department, Louisiana State University, Baton Rouge, Louisiana 70803.

Attorney for licensee: Mark Wetterhahn, Esq., Winston & Strawn,

1400 L Street, N.W., Washington, DC 20005.

NRC Project Director: William D. Beckner.

Gulf States Utilities Company, Cajun Electric Power Cooperative, and Entergy Operations, Inc., Docket No. 50–458, River Bend Station, Unit 1, West Feliciana Parish, Louisiana

Date of amendment request: May 30, 1995.

Description of amendment request: The proposed amendment would revise the technical specifications (TS) to increase the time period for drywell leakage tests from eighteen months to five years based on performance. The new surveillance requirements would also reduce the time period if any failures occur and limit subsequent periods until drywell leakage test performance again improves.

Basis for proposed no significant hazards consideration determination: As required by 10 CFR 50.91(a), the licensee has provided its analysis of the issue of no significant hazards consideration, which is presented below:

(1) The proposed change does not involve a change to the plant design or operation. As a result, the proposed change does not affect any of the parameters or conditions that contribute to initiation of any accidents previously evaluated. Thus, the proposed change cannot increase the probability of any accident previously evaluated.

The proposed change potentially affects the leak tight integrity of the drywell, a structure used to mitigate the consequences of a loss of coolant accident (LOCA). The function of the drywell is to channel the steam released from a LOCA through the suppression pool, limiting the amount of steam released to the primary containment atmosphere. This limits the containment pressurizations due to the LOCA. The leakage of the drywell is limited to ensure that the primary containment does not exceed its design limits of 185°F and 15 psig. Because the proposed change does not alter the plant design, only the frequency of measuring the drywell leakage, the proposed change does not directly result in an increase in drywell leakage. However, decreasing the test frequency can increase the probability that a large increase in drywell bypass leakage could go undetected for an extended period of time. There are several potential sources of steam bypass leakage paths. These include potential cracks in the drywell concrete structure and various penetrations through the drywell structure. Based upon the results of the structural integrity test conducted as part of the preoperational or preservice test program, additional cracking of the drywell is not expected during the remaining life of the plant. Ventilation and piping penetrations are designed with two isolation valves in series with one valve in the drywell and another either outside primary containment or in the wetwell. High energy lines that extend into the wetwell, such as the Main Steam line and Feedwater lines, are encapsulated by guard pipe to direct energy to the drywell in case of a piping rupture. Electrical penetrations are sealed with a high strength/density material that will prevent leakage as well a provide radiation shielding. The TS DBLRT [Drywell Bypass Leakage Rate Tests] acceptance criterion of 10% of the design bypass leakage area parameter provides margin for degradation. Drywell performance data to date suggests that drywell degradation, even during a five year interval between tests, will not exceed this margin. RBS presently has on docket with the staff a submittal (reference EOI letter RBG–41133, Rev. 1 to LAR 93–14 dated January 18, 1995) that allows the acceptance criteria, between required leakage rate tests, to be (bypass leakage area parameter) since at (bypass leakage area parameter) the containment temperature and pressurization response are bounded by the assumptions of the safety analysis.

Based on the above, EOI has concluded that the proposed change will not result in a significant increase in the consequences of any accident previously evaluated.

(2) The proposed change does not involve a change to the plant design or operation. As a result, the proposed change does not affect any of the parameters or conditions that could contribute to initiation of any accidents. Thus, the proposed change cannot create the possibility of an accident not previously evaluated.

(3) The proposed change only affects the frequency of measuring the drywell bypass leakage rate and does not change the bypass leakage limit for the drywell. However, the proposed change can increase the probability that a large increase in drywell bypass leakage could go undetected for an extended period of time. Operational experience has shown that the leak tightness of the drywell has been maintained significantly below the allowable leakage limits. In fact, an analysis was conducted to determine the potential risk to the public from the proposed change. Based on this analysis, under several different accident scenarios, the risk of radioactivity release from containment was found to be negligible.

As a result, EOI has concluded that the proposed change will not result in a significant reduction in the margin of safety.

The NRC staff has reviewed the licensee's analysis and, based on this review, it appears that the three standards of 10 CFR 50.92(c) are satisfied. Therefore, the NRC staff proposes to determine that the amendment request involves no significant hazards consideration.

Local Public Document Room location: Government Documents Department, Louisiana State University, Baton Rouge, Louisiana 70803.

Attorney for licensee: Mark Wetterhahn, Esq., Winston & Strawn, 1400 L Street, N.W., Washington, D.C. 20005.

NRC Project Director: William D. Beckner.

Indiana Michigan Power Company, Docket Nos. 50–315 and 50–316, Donald C. Cook Nuclear Plant, Unit Nos. 1 and 2, Berrien County, Michigan

Date of amendment requests: May 25, 1995 (AEP:NRC:107IT).

Description of amendment requests: The proposed amendments would implement a cycle- and burnup-dependent peaking factor penalty to the allowable power level. The Technical Specifications would be changed to refer to the Core Operating Limits Report for this burnup-dependent penalty.

Basis for proposed no significant hazards consideration determination: As required by 10 CFR 50.91(a), the licensee has provided its analysis of the issue of no significant hazards consideration, which is presented below:

Per 10 CFR 50.92, a proposed amendment will not involve a significant hazards consideration if the proposed amendment does not:

(1) involve a significant increase in the probability or consequences of an accident previously evaluated,

(2) create the possibility of a new or different kind of accident from any accident previously evaluated, or

(3) involve a significant reduction in a margin of safety.

Criterion 1

The proposed changes will not involve a significant increase in the probability of an accident previously evaluated because the changes will not result in a change to any of the process variables that might initiate an accident. There are no physical changes to the plant associated with this T/S change. The consequences of an accident previously evaluated will not be increased because the changes increase the penalty applied to F_Q when it is measured to be increasing. F_Q and allowable power level (APL) T/S surveillance requirements are not being changed. Furthermore, allowing a cycle and burnup dependent F_Q penalty to be located in the COLR was accepted by the NRC in a [November 26, 1993] safety evaluation on WCAP–10216–P, Rev. 1 [''Relaxation of Constant Axial Offset Control- F_Q Surveillance Technical Specification'']. Criterion 2

The proposed changes will not create the possibility of a new or different kind of accident from any accident previously evaluated because the changes will involve no physical changes to the plant nor any changes in plant operations. Furthermore, the F_Q and APL T/S surveillance requirements are not being changed, and the change to the F_Q penalty is conservative.

Criterion 3

The proposed amendment[s] will not involve a significant reduction in a margin of safety. When the increased F_Q penalty is applied, it reduces the allowable power level, thus increasing the margin of safety.

The NRC staff has reviewed the licensee's analysis and, based on this review, it appears that the three standards of 10 CFR 50.92(c) are satisfied. Therefore, the NRC staff proposes to determine that the amendment requests involve no significant hazards consideration.

Local Public Document Room location: Maud Preston Palenske Memorial Library, 500 Market Street, St. Joseph, Michigan 49085.

Attorney for licensee: Gerald Charnoff, Esq., Shaw, Pittman, Potts and Trowbridge, 2300 N Street, NW, Washington, DC 20037.

NRC Project Director: Cynthia A. Carpenter, Acting.

Indiana Michigan Power Company, Docket Nos. 50–315 and 50–316, Donald C. Cook Nuclear Plant, Unit Nos. 1 and 2, Berrien County, Michigan

Date of amendment requests: May 25, 1995 (AEP:NRC:1124B).

Description of amendment requests: The proposed amendments would modify the Technical Specifications (TS) to allow fuel reconstitution. The proposed change is a TS line item improvement per NRC Generic Letter 90–02, supplement 1, ''Alternative Requirements for Fuel Assemblies in the Design Features Section of Technical Specifications.''

Basis for proposed no significant hazards consideration determination: As required by 10 CFR 50.91(a), the licensee has provided its analysis of the issue of no significant hazards consideration, which is presented below:

Per 10 CFR 50.92, a proposed change does not involve significant hazards consideration if the change does not:

1. Involve a significant increase in the probability or consequence of an accident previously evaluated,
2. Create the possibility of a new or different kind of accident from any accident previously evaluated, or
3. Involve a significant reduction in a margin of safety.

Criterion 1

The proposed changes only modify the T/Ss such that reconstitution is recognized as acceptable under very limited circumstances. Reconstitution is limited to substitution of zirconium alloy or stainless steel filler rods, and must be in accordance with approved applications of fuel rod configurations. Although these changes permit reconstitution to occur without the need for a specific T/S change, an approved methodology is required prior to its application. Since the changes will allow substitution of filler rods for leaking or potentially leaking rods, the changes may actually reduce the radiological consequences of an accident. It is noted that the specific changes requested in this letter have previously been found acceptable by the NRC in GL 90–02 supplement 1. For these reasons, we conclude that the changes will not involve a significant increase in the probability or consequences of an accident previously evaluated.

Criterion 2

The proposed changes will not create the possibility of a new or different kind of accident from any accident previously evaluated because they will only affect the assembly configuration and can only be implemented in accordance with an NRC-approved methodology. The other aspects of plant design, operation limitations, and responses to events will remain unchanged. It is noted that the changes have previously been determined acceptable by the NRC in GL 90–02 supplement 1.

Criterion 3

The proposed amendment will not involve a significant reduction in a margin of safety because the changes can only be implemented in accordance with an NRC-approved methodology. It is noted that the changes have previously been determined acceptable by the NRC in GL 90–02 supplement 1.

The NRC staff has reviewed the licensee's analysis and, based on this review, it appears that the three standards of 10 CFR 50.92(c) are satisfied. Therefore, the NRC staff proposes to determine that the amendment requests involve no significant hazards consideration.

Local Public Document Room location: Maud Preston Palenske Memorial Library, 500 Market Street, St. Joseph, Michigan 49085.

Attorney for licensee: Gerald Charnoff, Esq., Shaw, Pittman, Potts and Trowbridge, 2300 N Street, NW, Washington, DC 20037.

NRC Project Director: Cynthia A. Carpenter, Acting.

Indiana Michigan Power Company, Docket Nos. 50–315 and 50–316, Donald C. Cook Nuclear Plant, Unit Nos. 1 and 2, Berrien County, Michigan

Date of amendment requests: May 25, 1995 (AEP:NRC:1200B).

Description of amendment requests: The proposed amendments would modify the Technical Specifications to change the surveillance frequency of the manual actuation function for main steam line isolation. This change is consistent with the testing requirements for associated valves as specified in the American Society of Mechanical Engineers (ASME) Code Section XI inservice testing program at Cook.

Basis for proposed no significant hazards consideration determination: As required by 10 CFR 50.91(a), the licensee has provided its analysis of the issue of no significant hazards consideration, which is presented below:

Per 10 CFR 50.92, a proposed change does not involve significant hazards consideration if the change does not:

1. Involve a significant increase in the probability or consequence of an accident previously evaluated,
2. Create the possibility of a new or different kind of accident from any accident previously evaluated, or
3. Involve a significant reduction in a margin of safety.

Criterion 1

This change will reduce the frequency of the surveillance testing on the MSIV [main steamline isolation valve] manual actuation circuitry from monthly to quarterly. Because of the risks involved in testing the dump valves, the reduction in test frequency may reduce the probability of an accidental unit trip and valve seat failure due to repeated cycling. Our review of the surveillance test history has shown that the system is highly reliable, and gives us confidence that the change in test frequency will not endanger public health and safety. Furthermore, the change to a quarterly surveillance interval is consistent with the testing performed for the dump valves per ASME Section XI. For these reasons, it is our belief that the proposed changes do not involve a significant increase in the probability or consequences of a previously evaluated accident.

Criterion 2

The changes will not introduce any new modes of plant operation, nor will any physical changes to the plant be required. Thus, the changes should not create the possibility of a new or different kind of accident from any accident previously analyzed or evaluated.

Criterion 3

This change will reduce the frequency of the surveillance testing on the MSIV manual actuation circuitry from monthly to quarterly. Our review of the surveillance test history has shown that the system is highly reliable, and gives us confidence that the change in test frequency will not endanger public health and safety. Furthermore, the change to quarterly surveillance is consistent with the testing performed for the dump valves per ASME Section XI. For these reasons, it is our belief that the proposed changes do not involve a significant reduction in a margin of safety.

The NRC staff has reviewed the licensee's analysis and, based on this review, it appears that the three standards of 10 CFR 50.92(c) are satisfied. Therefore, the NRC staff proposes to determine that the amendment requests involve no significant hazards consideration.

Local Public Document Room location: Maud Preston Palenske Memorial Library, 500 Market Street, St. Joseph, Michigan 49085.

Attorney for licensee: Gerald Charnoff, Esq., Shaw, Pittman, Potts and Trowbridge, 2300 N Street, NW, Washington, DC 20037.

NRC Project Director: Cynthia A. Carpenter, Acting.

Indiana Michigan Power Company, Docket Nos. 50–315 and 50–316, Donald C. Cook Nuclear Plant, Unit Nos. 1 and 2, Berrien County, Michigan

Date of amendment requests: May 26, 1995 (AEP:NRC:1210).

Description of amendment requests: The proposed amendments would modify the Reactor Trip System Instrumentation and Engineered Safety Feature Actuation System Instrumentation sections of the Technical Specifications (TS) to relocate the tables of response time limits to the Updated Final Safety Analysis Report (UFSAR). These changes are a line item improvement of the TS in accordance with NRC Generic Letter 93–08, ''Relocation of Technical Specification Tables of Instrument Response Time Limits.''

Basis for proposed no significant hazards consideration determination: As required by 10 CFR 50.91(a), the licensee has provided its analysis of the issue of no significant hazards consideration, which is presented below:

Per 10 CFR 50.92, a proposed amendment will not involve a significant hazards consideration if the proposed amendment does not:

(1) Involve a significant increase in the probability or consequences of an accident previously evaluated,

(2) Create the possibility of a new or different kind of accident from any accident previously evaluated, or

(3) Involve a significant reduction in a margin of safety.

Criterion 1

The proposed changes will not involve a significant increase in the probability of an accident previously evaluated because the changes will not result in a change to any of the process variables that might initiate an accident. There are no physical changes to the plant associated with the T/S change. The consequences of an accident previously evaluated will not be increased because the changes simply allow relocation of response time limits to the UFSAR. Time response testing will continue to be required by the T/Ss. Any changes to the response time values will be made in accordance with the requirements of 10 CFR 50.59. It is noted that these T/S changes have previously been determined acceptable by the NRC in GL 93–08.

Criterion 2

The proposed changes will not create the possibility of a new or different kind of accident from any accident previously evaluated because the changes will involve no physical changes to the plant nor any changes in plant operations. Time response testing will continue to be required by the T/Ss. Any changes to the time response values will be made in accordance with the requirements of 10 CFR 50.59. It is noted that these changes have previously been determined acceptable by the NRC in GL 93–08.

Criterion 3

The proposed amendment will not involve a significant reduction in a margin of safety because time response testing will continue to be required by the T/Ss. Any changes to the response time values will be made in accordance with the requirements of 10 CFR 50.59. It is noted that these changes have previously been determined acceptable by the NRC in GL 93–08.

The NRC staff has reviewed the licensee's analysis and, based on this review, it appears that the three standards of 10 CFR 50.92(c) are satisfied. Therefore, the NRC staff proposes to determine that the amendment requests involve no significant hazards consideration.

Local Public Document Room location: Maud Preston Palenske Memorial Library, 500 Market Street, St. Joseph, Michigan 49085.

Attorney for licensee: Gerald Charnoff, Esq., Shaw, Pittman, Potts and Trowbridge, 2300 N Street, NW, Washington, DC 20037.

NRC Project Director: Cynthia A. Carpenter, Acting.

North Atlantic Energy Service Corporation, Docket No. 50–443, Seabrook Station, Unit No. 1, Rockingham County, New Hampshire

Date of amendment request: May 30, 1995.

Description of amendment request: The proposed amendment would change the upper limit for the moderator temperature coefficient (MTC) for certain operating conditions. Specifically, the upper limit specified in Technical Specification 3.1.1.3 for the MTC would be changed to $+0.5 \times 10^{-4}$ delta k/k/°F for all rods out at the beginning of cycle for power levels up to 70% rated thermal power with a linear ramp to 0 delta k/k/°F at 100% rated thermal power. The currently specified upper limit for all operating conditions is 0 delta k/k/°F.

A paragraph would be added to the Basis to Technical Specification 3.1.1.3 providing a commitment to comply with the ATWS Rule and the basis for the Rule by assuring ATWS core damage frequency will remain below the Commission established target of 1.0×10^{-5} per reactor year. The commitment would be implemented by determining a more restrictive, cycle-specific upper MTC limit and placing it in the Core Operating Limits Report (COLR).

Additionally, a reference for the analytical method used to determine the cycle-specific MTC upper limit would be added to TS 6.8.1.6.b.

Basis for proposed no significant hazards consideration determination: As required by 10 CFR 50.91(a), the licensee has provided its analysis of the issue of no significant hazards consideration. The NRC staff has reviewed the licensee's analysis against the standards of 10 CFR 50.92(c). The NRC staff's review is presented below.

A. The changes do not involve a significant increase in the probability or consequences of an accident previously evaluated (10 CFR 50.92(c)(1)). The proposed changes do not affect the manner by which the facility is operated and do not change any facility design feature or equipment which influences the initiation of an accident, therefore, there is no change in the probability of any accident previously analyzed. Each accident or transient, with the exception of the Anticipated Transient Without SCRAM (ATWS), has been analyzed for the proposed changes and has been approved previously by the Commission with the issuance of Amendment 33 (December 6, 1994) to the Facility Operating License. The proposed cycle-specific MTC to be included in the COLR will assure that the consequences of an ATWS will remain bounded by the analysis previously documented. Therefore, the consequences of previously evaluated accidents, including ATWS, will not be significantly increased by the proposed changes.

B. The changes do not create the possibility of a new or different kind of accident from any accident previously evaluated (10 CFR 50.92(c)(2)) because the changes proposed merely involve changes in the upper limits of MTC imposed by the Technical Specifications and COLR. No changes are made to the design or manner of operation of any structure, system or component and no new failure mechanisms are introduced.

C. The changes do not involve a significant reduction in a margin of safety (10 CFR 50.92(c)(3)). The analyses of each accident or transient previously presented to support the issuance of Amendment 33 were performed using the proposed upper MTC limit, and the results demonstrated that the acceptance criteria specified for each event are met. The cycle-specific MTC limit in the COLR will be adjusted to assure that the acceptance criteria for a postulated ATWS event are met thereby preserving the margin of safety.

Based on this review, it appears that the three standards of 10 CFR 50.92(c) are satisfied. Therefore, the NRC staff proposes to determine that the amendment request involves no significant hazards consideration.

Local Public Document Room location: Exeter Public Library, Founders Park, Exeter, NH 03833.

Attorney for licensee: Thomas Dignan, Esquire, Ropes & Gray, One International Place, Boston MA 02110–2624.

NRC Project Director: Phillip F. McKee.

Omaha Public Power District, Docket No. 50–285, Fort Calhoun Station, Unit No. 1, Washington County, Nebraska

Date of amendment request: May 31, 1995.

Description of amendment request: The amendment would provide additional restrictions on the operation of the component cooling water (CCW) system heat exchangers to ensure that the CCW system temperature is maintained within its analyzed design basis.

Basis for proposed no significant hazards consideration determination: As required by 10 CFR 50.91(a), the licensee has provided its analysis of the issue of no significant hazards consideration, which is presented below:

(1) The proposed change does not involve a significant increase in the probability or consequences of an accident previously evaluated.

In preparation for, and in response to a service water system operational performance self assessment, the heat loads in the Component Cooling Water (CCW) system were reevaluated to determine the peak temperatures on the system and components cooled by the CCW system. It was determined that if all of the containment coolers were operating, the return temperature of the CCW system could exceed the 120°F stated in the Updated Safety Analysis Report (USAR) as the maximum temperature of the system.

During a Large Break Loss of Coolant Accident (LBLOCA) or a Main Steam Line Break Inside Containment (MSLB/IC), the containment air cooling units and containment air cooling and filtering units will automatically start to remove heat from the containment atmosphere. The heat sink for the containment air coolers is the CCW system. The heat removed from the containment atmosphere is transferred to the Raw Water (RW) system via the component cooling heat exchangers AC–1A, B, C, and D. The heat is then ultimately rejected to the Missouri River by the RW system.

Calculations indicate that the CCW return temperature (i.e., mixed exit temperature) from the component cooling heat exchangers could exceed 160°F after a LBLOCA or MSLB/IC with the present TS minimum requirements for the heat exchangers. Further evaluation indicated that the CCW system (and components cooled by CCW) could withstand temperatures above the 120°F temperature stated in the USAR, but a return temperature above 158°F would require additional evaluation of thermal-induced stresses on the CCW return side pipe supports. In order to maintain the peak CCW return temperature to less than or equal to 158°F, additional restrictions must be placed on the number of component cooling heat exchangers required to be operable.

The current minimum requirements for component cooling heat exchangers are contained in Technical Specification (TS) 2.3, ''Emergency Core Cooling System,'' and require that three of the four heat exchangers be operable when the plant is in operating Modes 1 and 2. Analyses show that three in service heat exchangers will maintain the CCW temperatures in an analyzed range following a DBA. In order to ensure that three heat exchangers are available, in conjunction with an assumed single failure, four are required to be operable. The proposed change would place additional restrictions on the operation of the CCW heat exchangers by requiring four heat exchangers to be operable in Modes 1 and 2, and if only three are operable then provide 14 days to restore the system to four operable heat exchangers.

The proposed change does not involve a significant increase in the probability of an accident previously evaluated. The proposed change does not impact systems, structures, or components that are initiators of any analyzed accidents.

The proposed change does not involve a significant increase in the consequences of an accident previously evaluated. The proposed change ensures that the CCW system and safety-related components cooled by the CCW will perform their safety functions in response to previously evaluated accidents. The proposed change was evaluated utilizing the probabilistic risk analysis model of the FCS Individual Plant Examination. The IPE concluded that the routine testing and maintenance activities, for the RW and CCW systems (e.g., inoperability of components for testing and maintenance) are not significant contributors to severe accident risk.

Therefore, the proposed change would not increase the probability or consequences of an accident previously evaluated.

(2) The proposed change does not create the possibility of a new or different kind of accident from any accident previously evaluated.

The proposed change does not create an initiator for a new or different kind of accident from those previously evaluated. The proposed change places additional restrictions on the operation of equipment to ensure that the CCW system and safety-related components cooled by the CCW will perform their safety functions. The additional restrictions were evaluated in combination with existing allowances on RW and CCW pump inoperability, to confirm that the peak CCW return temperature would be in an analyzed range, and will not adversely impact the operability of the CCW system or safety-related components cooled by CCW. These restrictions are valid up to and including a river temperature of 90°F, which is the upper bound currently cited in the USAR.

Various single active failures were postulated to determine the most limiting failure in conjunction with the maximum heat load from the containment air coolers. It was determined that with the river temperature less than 70 °F, a single failure of a RW valve to open on a component cooling heat exchanger would not raise the CCW return temperature to an unanalyzed level, but with the river temperature greater than or equal to 70 °F, the CCW return temperature could be at an unanalyzed level. Therefore, it is proposed that when the river temperature is greater than or equal to 70 °F four heat exchangers have RW in service (i.e., RW valves open). Having RW in service eliminates the potential failure of a RW valve to auto-open as a credible single active failure.

The proposed change ensures that the CCW system and safety-related components cooled by the CCW will perform their safety functions. Therefore, the proposed change does not create the possibility of a new or different kind of accident from any previously evaluated.

(3) The proposed change does not involve a significant reduction in a margin of safety.

The proposed change provides additional restrictions on the CCW system and ensures that the CCW system will perform its design safety function. These additional restrictions ensure that the CCW system will be capable of removing the maximum heat load from the containment cooling system following a DBA and thereby ensures that the containment pressure remains below its limit as assumed in the USAR. Therefore, the proposed change does not involve a significant reduction in a margin of safety.

The NRC staff has reviewed the licensee's analysis and, based on this review, it appears that the three standards of 10 CFR 50.92(c) are satisfied. Therefore, the NRC staff proposes to determine that the amendment request involves no significant hazards consideration.

Local Public Document Room location: W. Dale Clark Library, 215 South 15th Street, Omaha, Nebraska 68102.

Attorney for licensee: James R. Curtiss, Winston & Strawn, 1400 L Street, N.W., Washington, DC 20005–3502.

NRC Project Director: William H. Bateman.

Pennsylvania Power and Light Company, Docket No. 50–387, Susquehanna Steam Electric Station, Unit 1, Luzerne County, Pennsylvania

Date of amendment request: May 5, 1995.

Description of amendment request: This amendment would remove from the Susquehanna Steam Electric Station Unit 2 Technical Specifications, the listing of three residual heat removal (RHR) system valves in Table 3.6.3–1, ''Primary Containment Isolation Valves'' These valves are no longer needed to support the steam condensing mode of the RHR system and are being removed from the plant during the Unit 2 seventh

refueling and inspection outage in September of this year.

Basis for proposed no significant hazards consideration determination: As required by 10 CFR 50.91(a), the licensee has provided its analysis of the issue of no significant hazards consideration, which is presented below:

1. Involve a significant increase in the probability or consequences of an accident previously evaluated.

With the prior deletion of the steam condensing mode of RHR and the isolation of the high and low pressure interfaces, the three pressure relief valves that are being removed from the plant have no active function. Their passive function of maintaining system or containment integrity will be fulfilled by blind flanges on equilvent. Also, the RHR and RCIC piping are provided with overpressure protection from other pressure relief valves. Therefore, the removal of these pressure relief valves does not involve a significant increase in the probability or consequences of an accident previously evaluated.

2. Create the possibility of a new or different kind of accident from any accident previously evaluated.

The pressure relief valves that are being removed had two primary functions. First, they provided overpressure protection for the RHR and RCIC piping during the steam condensing mode of RHR. Since the steam condensing mode has been deleted from the plant, these valves no longer have that function. Also, overpressure protection of the RHR and RCIC piping is provided by other existing pressure relief valves. Second, these valves maintained system or containment integrity. When the pressure relief valves are removed from the plant, they will be replaced with blind flanges or equivalent that will maintain system or containment integrity. Therefore, the removal of the three pressure relief valves does not create the possibility of a new or different kind of accident from any accident previously evaluated.

3. Involve a significant reduction in a margin of safety.

Since the steam condensing mode of RHR has been eliminated, the three pressure relief valves have no active function. Their passive function of maintaining system or containment integrity will be fulfilled by blind flanges or equivalent. Also, overpressure protection of RHR and RCIC piping is provided by other existing pressure relief valves. Therefore, the removal of the three pressure relief valves does not involve a significant reduction in a margin of safety.

The NRC staff has reviewed the licensee's analysis and, based on this review, it appears that the three standards of 10 CFR 50.92(c) are satisfied. Therefore, the NRC staff proposes to determine that the amendment request involves no significant hazards consideration.

Local Public Document Room location: Osterhout Free Library, Reference Department, 71 South Franklin Street, Wilkes-Barre, Pennsylvania 18701.

Attorney for licensee: Jay Silberg, Esquire, Shaw, Pittman, Potts and Trowbridge, 2300 N Street NW., Washington, DC 20037.

NRC Project Director: John F. Stolz.

Philadelphia Electric Company, Docket Nos. 50–352 and 50–353, Limerick Generating Station, Units 1 and 2, Montgomery County, Pennsylvania

Date of amendment request: May 19, 1995.

Description of amendment request: The proposed Technical Specifications (TS) change would revise TS Table 3.3.3–3, ''Emergency Core Cooling System Response Times'' to reflect the value of 60 seconds for the High Pressure Coolant Injection system response time instead of 30 seconds as currently specified.

Basis for proposed no significant hazards consideration determination: As required by 10 CFR 50.91(a), the licensee has provided its analysis of the issue of no significant hazards consideration, which is presented below:

1. The proposed Technical Specifications (TS) change does not involve a significant increase in the probability or consequences of an accident previously evaluated.

The proposed TS change will increase the High Pressure Coolant Injection (HPCI) system response time from 30 seconds to 60 seconds. The proposed TS change does not involve any physical change in the plant configuration which may cause an accident, or affect safety-related equipment performance or cause its failure. There is no increase in the consequences of an accident, because the HPCI response time increase does not affect the licensing basis Peak Cladding Temperature (PCT), which remains below the regulatory limit of 2200 °F.

The Loss of Feedwater Flow (LOFW) event was evaluated for being potentially affected by the increased HPCI system response time. The HPCI system is one of the systems which provides reactor vessel water makeup inventory, and is initiated automatically on a low reactor water level (Level 2) signal. The LOFW analysis shows that Level 1 is not reached and that the top of the active fuel will remain covered throughout the event. Therefore, adequate core cooling will be maintained and no fuel damage will result. The probability of fuel failure will not be increased by this proposed TS change.

Therefore, the proposed TS change does not involve an increase in the probability or consequences of an accident previously evaluated.

2. The proposed TS change does not create the possibility of a new or different kind of accident from any accident previously evaluated.

The proposed TS change will increase the High Pressure Coolant Injection (HPCI) system response time from 30 seconds to 60 seconds. This proposed change is bounded by the current Emergency Core Cooling System (ECCS)—Loss-of-Coolant Accident (LOCA) analysis for Limerick Generating Station (LGS) Units 1 and 2. The change in HPCI system response time does not involve any physical modifications to the plant systems or equipment, nor does it introduce a new operational/failure mode, which might cause a different type of accident. In case of a Loss of Feedwater Flow (LOFW) event, the HPCI system will operate as designed, maintaining adequate core cooling.

Therefore, the proposed TS change does not create the possibility of a new or different kind of accident, from any accident previously evaluated.

3. The proposed TS change does not involve a significant reduction in a margin of safety.

The following TS Bases were reviewed for potential reduction in the margin of safety:

3/4.5 Emergency Core Cooling System
2.1.4 Reactor Vessel Water Level

The TS Bases do not discuss the High Pressure Coolant Injection (HPCI) system start time. The margin of safety, as defined in the TS Bases, will remain the same. The proposed TS change is in accordance with the current licensing basis Emergency Core Cooling System (ECCS)—Loss of Coolant Accident (LOCA) analysis for LGS Units 1 and 2, and does not impact any safety limits of the plant. The HPCI system will operate as designed during the LOFW event, maintaining adequate core cooling.

Therefore, the proposed TS change does not involve a reduction in a margin of safety.

The NRC staff has reviewed the licensee's analysis and, based on this review, it appears that the three standards of 10 CFR 50.92(c) are satisfied. Therefore, the NRC staff proposes to determine that the amendment request involves no significant hazards consideration.

Local Public Document Room location: Pottstown Public Library, 500 High Street, Pottstown, Pennsylvania 19464.

Attorney for licensee: J. W. Durham, Sr., Esquire, Sr. V.P. and General Counsel, Philadelphia Electric Company, 2301 Market Street, Philadelphia, Pennsylvania 19101.

NRC Project Director: John F. Stolz.

Notice of Issuance of Amendments to Facility Operating Licenses

During the period since publication of the last biweekly notice, the Commission has issued the following amendments. The Commission has determined for each of these amendments that the application complies with the standards and requirements of the Atomic Energy Act of 1954, as amended (the Act), and the Commission's rules and regulations. The Commission has made appropriate findings as required by the Act and the

Commission's rules and regulations in 10 CFR Chapter I, which are set forth in the license amendment.

Notice of Consideration of Issuance of Amendment to Facility Operating License, Proposed No Significant Hazards Consideration Determination, and Opportunity for A Hearing in connection with these actions was published in the **Federal Register** as indicated.

Unless otherwise indicated, the Commission has determined that these amendments satisfy the criteria for categorical exclusion in accordance with 10 CFR 51.22. Therefore, pursuant to 10 CFR 51.22(b), no environmental impact statement or environmental assessment need be prepared for these amendments. If the Commission has prepared an environmental assessment under the special circumstances provision in 10 CFR 51.12(b) and has made a determination based on that assessment, it is so indicated.

For further details with respect to the action see (1) the applications for amendment, (2) the amendment, and (3) the Commission's related letter, Safety Evaluation and/or Environmental Assessment as indicated. All of these items are available for public inspection at the Commission's Public Document Room, the Gelman Building, 2120 L Street, NW., Washington, DC, and at the local public document rooms for the particular facilities involved.

Arizona Public Service Company, et al., Docket Nos. STN 50–528, STN 50–529, and STN 50–530, Palo Verde Nuclear Generating Station, Units 1, 2, and 3, Maricopa County, Arizona

Date of application for amendments: December 7, 1994.

Brief description of amendments: These amendments revise the Bases of TS 3/4.7.5, ''Ultimate Heat Sink'' (UHS), to describe the UHS as containing a 26-day supply of cooling water, instead of a 27-day supply. In addition, the reference to Regulatory Guide 1.27 in the bases of this TS would be revised to reference the January 1976 revision rather than the March 1974 revision.

Date of issuance: June 14, 1995.

Effective date: June 14, 1995.

Amendment Nos.: Unit 1—Amendment No. 93; Unit 2—Amendment No. 81; Unit 3—Amendment No. 64.

Facility Operating License Nos. NPF–41, NPF–51, and NPF–74: The amendments revised the associated Bases of the Technical Specifications.

Date of initial notice in **Federal Register**: March 1, 1995 (60 FR 11127) The Commission's related evaluation of the amendments is contained in a Safety Evaluation dated June 14, 1995.

No significant hazards consideration comments received: No.

Local Public Document Room location: Phoenix Public Library, 12 East McDowell Road, Phoenix, Arizona 85004

Boston Edison Company, Docket No. 50–293, Pilgrim Nuclear Power Station, Plymouth County, Massachusetts

Date of application for amendment: February 9, 1995.

Brief description of amendment: This amendment revises the reactor high water level trip level setting for the Group 1 isolation. The change will allow an increase to the main steam isolation valve high water level isolation setpoint.

Date of issuance: June 15, 1995.

Effective date: As of the date of issuance to be implemented within 90 days.

Amendment No.: 164.

Facility Operating License No. DPR–35: Amendment revised the Technical Specifications.

Date of initial notice in **Federal Register**: March 15, 1995 (60 FR 14017) The Commission's related evaluation of the amendment is contained in a Safety Evaluation dated June 15, 1995.

No significant hazards consideration comments received: No.

Local Public Document Room location: Plymouth Public Library, 11 North Street, Plymouth, Massachusetts 02360.

Commonwealth Edison Company, Docket Nos. STN 50–454 and STN 50–455, Byron Station, Unit Nos. 1 and 2, Ogle County, Illinois

Docket Nos. STN 50–456 and STN 50–457, Braidwood Station, Unit Nos. 1 and 2, Will County, Illinois

Date of application for amendments: May 20, 1994, as revised on February 2, 1995, and supplemented December 2, 1994, and March 14, 1995.

Brief description of amendments: The amendments revised the Technical Specifications (TS) as they apply to Byron, Unit 1, and Braidwood, Unit 1, to incorporate an alternative repair criteria for defects found in the portion of the expanded steam generator tubes within the tubesheet.

Date of issuance: June 22, 1995.

Effective date: June 22, 1995.

Amendment Nos.: 72, 72, 63, and 63.

Facility Operating License Nos. NPF–37, NPF–66, NPF–72 and NPF–77: The amendments revised the Technical Specifications.

Date of initial notice in **Federal Register**: July 6, 1994 (59 FR 34659) and March 29, 1995 (60 FR 16184). The Commission's related evaluation of the amendments is contained in a Safety Evaluation dated June 22, 1995.

No significant hazards consideration comments received: No.

Local Public Document Room location: For Byron, the Byron Public Library District, 109 N. Franklin, P.O. Box 434, Byron, Illinois 61010; for Braidwood, the Wilmington Public Library, 201 S. Kankakee Street, Wilmington, Illinois 60481.

Commonwealth Edison Company, Docket Nos. 50–237 and 50–249, Dresden Nuclear Power Station, Units 2 and 3, Grundy County, Illinois

Docket Nos. 50–254 and 50–265, Quad Cities Nuclear Power Station, Units 1 and 2, Rock Island County, Illinois

Date of application for amendments: September 15, 1992, as supplemented April 21, 1995.

Brief description of amendments: This application upgrades the current custom Technical Specifications (TS) for Dresden and Quad Cities to the Standard Technical Specifications contained in NUREG–0123, ''Standard Technical Specification General Electric Plants BWR/4.'' This application upgrades only Sections 2.0 (Safety Limits and Limiting Safety System Settings), 3/4.11 (Power Distribution Limits), and 3/4.12 (Special Test Exceptions).

Date of issuance: June 13, 1995.

Effective date: Immediately, to be implemented no later than December 31, 1995, for Dresden Station and June 30, 1996, for Quad Cities Station.

Amendment Nos.: 134, 128, 155, and 151.

Facility Operating License Nos. DPR–19, DPR–25, DPR–29 and DPR–30. The amendments revised the Technical Specifications.

Date of initial notice in **Federal Register**: May 10, 1995 (60 FR 24906) The Commission's related evaluation of the amendments is contained in a Safety Evaluation dated June 13, 1995.

No significant hazards consideration comments received: No.

Local Public Document Room location: for Dresden, Morris Area Public Library District, 604 Liberty Street, Morris, Illinois 60450; for Quad Cities, Dixon Public Library, 221 Hennepin Avenue, Dixon, Illinois 61021.

Commonwealth Edison Company, Docket Nos. 50–237 and 50–249, Dresden Nuclear Power Station, Units 2 and 3, Grundy County, Illinois

Docket Nos. 50–254 and 50–265, Quad Cities Nuclear Power Station, Units 1 and 2, Rock Island County, Illinois

Date of application for amendments: December 15, 1993, as supplemented April 21, 1995.

Brief description of amendments: These amendments upgrade the current custom Technical Specifications (TS) for Dresden and Quad Cities to the Standard Technical Specifications contained in NUREG–0123, ''Standard Technical Specifications General Electric Plants BWR/4.'' These amendments upgrade only Section 5.0 (Design Features). The amendments include the relocation of some requirements from the TS to licensee-controlled documents.

Date of issuance: June 14, 1995.

Effective date: Immediately, to be implemented no later than December 31, 1995, for Dresden Station and June 30, 1996, for Quad Cities Station.

Amendment Nos.: 135, 129, 156, and 152

Facility Operating License Nos. DPR–19, DPR–25, DPR–29 and DPR–30. The amendments revised the Technical Specifications.

Date of initial notice in **Federal Register**: May 10, 1995 (60 FR 24909) The Commission's related evaluation of the amendments is contained in a Safety Evaluation dated June 14, 1995.

No significant hazards consideration comments received: No.

Local Public Document Room location: for Dresden, Morris Area Public Library District, 604 Liberty Street, Morris, Illinois 60450; for Quad Cities, Dixon Public Library, 221 Hennepin Avenue, Dixon, Illinois 61021.

Consumers Power Company, Docket No. 50–255, Palisades Plant, Van Buren County, Michigan

Date of application for amendment: December 13, 1994, as supplemented May 3, 1995.

Brief description of amendment: This amendment revises the Technical Specifications to add a high thermal performance (HTP) departure from nucleate boiling correlation to Safety Limit 2.1. The HTP correlation is used for HTP fuel loaded during recent fuel cycles.

Date of issuance: June 13, 1995.

Effective date: June 13, 1995.

Amendment No.: 168.

Facility Operating License No. DPR–20. Amendment revised the Technical Specifications.

Date of initial notice in **Federal Register**: March 10, 1995 (60 FR 24910) The May 3, 1995, submittal provided clarifying information which was within the scope of the initial application and did not affect the staff's initial proposed no significant hazards considerations findings.

The Commission's related evaluation of the amendment is contained in a Safety Evaluation dated June 13, 1995.

No significant hazards consideration comments received: No.

Local Public Document Room location: Van Wylen Library, Hope College, Holland, Michigan 49423.

Duquesne Light Company, et al., Docket Nos. 50–334 and 50–412, Beaver Valley Power Station, Unit Nos. 1 and 2, Shippingport, Pennsylvania

Date of application for amendments: June 17, 1993, as supplemented October 20, 1993, and May 23, 1995.

Brief description of amendments: These amendments revise the Appendix A technical specifications (TSs) for Unit 1 and Unit 2 by relocating the requirements of the radiological effluent technical specifications (RETS) and the solid radioactive wastes TSs from the Appendix A TSs to the offsite dose calculation manual (ODCM) or to the process control program (PCP) in accordance with the guidance provided in NRC Generic Letter 89–01 and NRC Report NUREG–1301. Programmatic controls are also being incorporated into the Administrative Controls section of the TSs. Additionally, editorial and definition changes are being made to facilitate the relocation of these requirements.

Date of issuance: June 12, 1995.

Effective date: June 12, 1995.

Amendment Nos.: 188 and 70.

Facility Operating License Nos. DPR–66 and NPF–73: Amendments revised the Technical Specifications.

Date of initial notice in **Federal Register**: August 4, 1993 (58 FR 41504). The Commission's related evaluation of the amendments is contained in a Safety Evaluation dated June 12, 1995.

No significant hazards consideration comments received: No.

Local Public Document Room location: B. F. Jones Memorial Library, 663 Franklin Avenue, Aliquippa, Pennsylvania 15001.

Entergy Operations, Inc., Docket No. 50–313, Arkansas Nuclear One Unit No. 1, Pope County, Arkansas

Date of amendment request: May 15, 1995, as supplemented by letters dated May 19 and June 7, 1995.

Brief description of amendment: The amendment was processed as an exigent amendment following issuance of a notice of enforcement discretion (NOED) by NRC letter dated May 17, 1995. The NOED and exigent technical specification (TS) amendment authorized the licensee to continue operating the reactor at power while the service water flow to the reactor building emergency coolers is less than the TS surveillance criteria.

Date of issuance: June 9, 1995.

Effective date: June 9, 1995.

Amendment No.: 182.

Facility Operating License No. DPR–51. Amendment revised the Technical Specifications.

Public comments requested as to proposed no significant hazards consideration: Yes (60 FR 27144, dated May 22, 1995). The notice provided an opportunity to submit comments on the Commission's proposed no significant hazards consideration determination. No comments have been received. The notice also provided for an opportunity to request a hearing by June 21, 1995, but stated that any such hearing would take place after issuance of the amendment. The Commission's related evaluation of the amendments, finding of exigent circumstances, and final determination of no significant hazards consideration is contained in a Safety Evaluation dated June 9, 1995.

No significant hazards consideration comments received: No.

Local Public Document Room location: Tomlinson Library, Arkansas Tech University, Russellville, AR 72801.

Entergy Operations, Inc., Docket No. 50–382, Waterford Steam Electric Station, Unit 3, St. Charles Parish, Louisiana

Date of amendment request: January 27, 1995.

Brief description of amendment: The amendment changed the Appendix A Technical Specifications by increasing the allowable maximum enrichment for the spent fuel pool and containment temporary storage rack from 4.1 to 4.9 weight percent U–235 when fuel assemblies contain fixed poisons.

Date of issuance: June 14, 1995.

Effective date: June 14, 1995.

Amendment No.: 108.

Facility Operating License No. NPF–38. Amendment revised the Technical Specifications.

Date of initial notice in **Federal Register**: March 15, 1995 (60 FR 14021)

The Commission's related evaluation of the amendment is contained in a Safety Evaluation dated June 14, 1995.

No significant hazards consideration comments received: No.

Local Public Document Room location: University of New Orleans Library, Louisiana Collection, Lakefront, New Orleans, Louisiana 70122.

Florida Power and Light Company, et al., Docket No. 50–389, St. Lucie Plant, Unit No. 2, St. Lucie County, Florida

Date of application for amendment: February 27, 1995.

Brief description of amendment: This amendment will modify surveillance requirement (SR) 4.9.8.1 and 4.9.8.2 to allow a reduction in the required minimum shutdown cooling flow rate under certain conditions during operational MODE 6. In addition, the format of the SR will be changed to clarify the intent of the stated surveillances.

Date of Issuance: June 14, 1995.

Effective Date: June 14, 1995.

Amendment No.: 76.

Facility Operating License No. NPF–16: Amendment revised the Technical Specifications.

Date of initial notice in **Federal Register***:* March 29, 1995 (60 FR 16187) The Commission's related evaluation of the amendment is contained in a Safety Evaluation dated June 14, 1995.

No significant hazards consideration comments received: No.

Local Public Document Room location: Indian River Junior College Library, 3209 Virginia Avenue, Fort Pierce, Florida 34954–9003.

Florida Power and Light Company, et al., Docket Nos. 50–335 and 50–389, St. Lucie Plant, Unit Nos. 1 and 2, St. Lucie County, Florida

Date of application for amendments: February 22, 1995.

Brief description of amendments: The proposed changes eliminate reference to an automatic containment air lock tester from technical specification 4.6.1.3. The automatic air lock tester is no longer being used.

Date of Issuance: June 22, 1995.

Effective Date: June 22, 1995.

Amendment Nos.: 137 and 77.

Facility Operating License Nos. DPR–67 and NPF–16: Amendments revised the Technical Specifications.

Date of initial notice in **Federal Register***:* March 29, 1995 (60 FR 16186) The Commission's related evaluation of the amendments is contained in a Safety Evaluation dated June 22, 1995.

No significant hazards consideration comments received: No.

Local Public Document Room location: Indian River Junior College Library, 3209 Virginia Avenue, Fort Pierce, Florida 34954–9003.

Florida Power and Light Company, Docket Nos. 50–250 and 50–251, Turkey Point Plant Units 3 and 4, Dade County, Florida

Date of application for amendments: January 17, 1995.

Brief description of amendments: These amendments concern implementation of Florida Power and Light nuclear physics methodology for calculations of the core operating limits report parameters.

Date of issuance: June 9, 1995.

Effective date: June 9, 1995.

Amendment Nos. 174 and 168.

Facility Operating Licenses Nos. DPR–31 and DPR–41: Amendments revised the Technical Specifications.

Date of initial notice in **Federal Register***:* March 1, 1995 (60 FR 11133) The Commission's related evaluation of the amendments is contained in a Safety Evaluation dated June 9, 1995.

No significant hazards consideration comments received: No.

Local Public Document Room location: Florida International University, University Park, Miami, Florida 33199.

Georgia Power Company, Oglethorpe Power Corporation, Municipal Electric Authority of Georgia, City of Dalton, Georgia, Docket Nos. 50–424 and 50–425, Vogtle Electric Generating Plant, Units 1 and 2, Burke County, Georgia

Date of application for amendments: October 3, 1994, as supplemented by letter dated March 1, 1995.

Brief description of amendments: The amendments revise Technical Specification 3/4.4.9, Pressure/Temperature Limits, and its associated Bases, to provide new reactor coolant system heatup and cooldown limitations and new power-operated relief valve setpoints for the low temperature overpressure protection system.

Date of issuance: June 8, 1995.

Effective date: As of the date of issuance to be implemented within 30 days.

Amendment Nos.: 87 and 65.

Facility Operating License Nos. NPF–68 and NPF–81: Amendments revised the Technical Specifications.

Date of initial notice in **Federal Register***:* December 21, 1994 (59 FR 65814) The March 1, 1995, letter provided supporting technical data that did not change the scope of the October 1, 1994, application and initial proposed no significant hazards consideration determination. The Commission's related evaluation of the amendments is contained in a Safety Evaluation dated June 8, 1995.

No significant hazards consideration comments received: No.

Local Public Document Room location: Burke County Library, 412 Fourth Street, Waynesboro, Georgia 30830.

GPU Nuclear Corporation, Docket No. 50–320, Three Mile Island Nuclear Station, Unit No. 2, (TMI–2), Dauphin County, Pennsylvania

Date of application for amendment: October 9, 1991.

Brief description of amendment: This amendment extends the expiration date of the license from November 9, 2009 to April 19, 2014.

Date of issuance: June 21, 1995.

Effective date: June 21, 1995.

Amendment No.: 49.

Possession-Only License No. DPR–73: The amendment extends the license expiration date.

Date of initial notice in **Federal Register***:* August 3, 1994 (59 FR 39591). The Commission's related evaluation of the amendment is contained in a Safety Evaluation dated June 21, 1995.

No significant hazards consideration comments received: No.

Local Public Document Room location: Government Publications Section, State Library of Pennsylvania, Walnut Street and Commonwealth Avenue, Box 1601, Harrisburg, Pennsylvania 17105.

Gulf States Utilities Company, Cajun Electric Power Cooperative, and Energy Operations, Inc., Docket No. 50–458, River Bend Station, Unit 1, West Feliciana Parish, Louisiana

Date of amendment request: February 22, 1994, as supplemented May 19, 1995.

Brief description of amendment: The amendment revised Technical Specifications 3.6.1.5, ''Main Steam—Positive Leakage Control System,'' and 3.6.1.10, ''Penetration Valve Leakage Control System,'' to add an allowed outage time of 7 days with both trains of each system inoperable. In addition, the allowed outage time for one train of the Penetration Valve Leakage Control System inoperable is increased from 7 days to 10 days.

Date of issuance: June 19, 1995.

Effective date: June 19, 1995.

Amendment No.: 80.

Facility Operating License No. NPF–47. The amendment revised the Technical Specifications.

Date of initial notice in **Federal Register***:* March 10, 1994 (59 FR 11331) The additional information contained in the supplemental letter dated May 19, 1995, was clarifying in nature and thus, within the scope of the initial notice and did not affect the staff's proposed no significant hazards consideration determination. The Commission's related evaluation of the amendment is contained in a Safety Evaluation dated June 19, 1995.

No significant hazards consideration comments received. No.

Local Public Document Room location: Government Documents Department, Louisiana State University, Baton Rouge, Louisiana 70803.

PECO Energy Company, Public Service Electric and Gas Company, Delmarva Power and Light Company, and Atlantic City Electric Company, Docket Nos. 50–277 and 50–278, Peach Bottom Atomic Power Station, Unit Nos. 2 and 3, York County, Pennsylvania

Date of application for amendments: November 17, 1994 as supplemented March 30, 1995.

Brief description of amendments: The amendments change equipment designations, instrument range descriptions, instrument setpoints and surveillance requirements in the Peach Bottom Technical Specifications to reflect planned modifications to the main stack and vent stack radiation monitoring systems.

Date of issuance: June 13, 1995.

Effective date: June 13, 1995.

Amendments Nos.: 204 and 207.

Facility Operating License Nos. DPR–44 and DPR–56: The amendments revised the Technical Specifications.

Date of initial notice in **Federal Register***:* March 15, 1995 (60 FR 14027) The March 30, 1995, submittal provided clarifying information that did not change the initial proposed no significant hazards consideration determination.

The Commission's related evaluation of the amendments is contained in a Safety Evaluation dated June 13, 1995.

No significant hazards consideration comments received: No.

Local Public Document Room location: Government Publications Section, State Library of Pennsylvania, (REGIONAL DEPOSITORY) Education Building, Walnut Street and Commonwealth Avenue, Box 1601, Harrisburg, Pennsylvania 17105.

PECO Energy Company, Public Service Electric and Gas Company, Delmarva Power and Light Company, and Atlantic City Electric Company, Docket Nos. 50–277 and 50–278, Peach Bottom Atomic Power Station, Unit Nos. 2 and 3, York County, Pennsylvania

Date of application for amendments: March 16, 1995.

Brief description of amendments: These amendments change the existing Technical Specification requirements for source range neutron monitoring equipment while in the refueling mode to requirements based on NUREG–1433, ''Standard Technical Specifications General Electric Plants, BWR/4.''

Date of issuance: June 13, 1995.

Effective date: June 13, 1995.

Amendments Nos.: 205 and 208.

Facility Operating License Nos. DPR–44 and DPR–56: The amendments revised the Technical Specifications.

Date of initial notice in **Federal Register***:* May 10, 1995 (60 FR 24913) The Commission's related evaluation of the amendments is contained in a Safety Evaluation dated June 13, 1995.

No significant hazards consideration comments received: No.

Local Public Document Room location: Government Publications Section, State Library of Pennsylvania, (REGIONAL DEPOSITORY) Education Building, Walnut Street and Commonwealth Avenue, Box 1601, Harrisburg, Pennsylvania 17105.

PECO Energy Company, Public Service Electric and Gas Company, Delmarva Power and Light Company, and Atlantic City Electric Company, Docket No. 50–277, Peach Bottom Atomic Power Station, Unit No. 2, York County, Pennsylvania

Date of application for amendment: March 30, 1995, as supplemented by letter dated May 26, 1995.

Brief description of amendment: The proposed amendment revises Technical Specification Section 4.7.D.1.b(1) by adding a footnote to exempt the High Pressure Coolant Injection motor-operated valve MO–2–23–015 from quarterly stroke testing requirements until refueling outage 2RO11.

Date of issuance: June 13, 1995.

Effective date: June 13, 1995.

Amendment No.: 206.

Facility Operating License No. DPR–44: Amendment revised the Technical Specifications.

Date of initial notice in **Federal Register***:* May 10, 1995 (60 FR 24912) The May 26, 1995, submittal provided clarifying information that did not change the initial proposed no significant hazards consideration determination.

The Commission's related evaluation of the amendment is contained in a Safety Evaluation dated June 13, 1995.

No significant hazards consideration comments received: No.

Local Public Document Room location: Government Publications Section, State Library of Pennsylvania, (REGIONAL DEPOSITORY) Education Building, Walnut Street and Commonwealth Avenue, Box 1601, Harrisburg, Pennsylvania 17105.

PECO Energy Company, Public Service Electric and Gas Company, Delmarva Power and Light Company, and Atlantic City Electric Company, Docket Nos. 50–277 and 50–278, Peach Bottom Atomic Power Station, Unit Nos. 2 and 3, York County, Pennsylvania

Date of application for amendments: March 22, 1995.

Brief description of amendments: These amendments reduce the local leak rate test hold time specified in the Technical Specification Tables 3.7.2 through 3.7.4 from one hour to 20 minutes.

Date of issuance: June 19, 1995.

Effective date: June 19, 1995.

Amendments Nos.: 207 and 209.

Facility Operating License Nos. DPR–44 and DPR–56: The amendments revised the Technical Specifications.

Date of initial notice in **Federal Register***:* May 10, 1995 (60 FR 24913). The Commission's related evaluation of the amendments is contained in a Safety Evaluation dated June 19, 1995.

No significant hazards consideration comments received: No.

Local Public Document Room location: Government Publications Section, State Library of Pennsylvania, (REGIONAL DEPOSITORY) Education Building, Walnut Street and Commonwealth Avenue, Box 1601, Harrisburg, Pennsylvania 17105.

Pennsylvania Power and Light Company, Docket Nos. 50–387 and 50–388 Susquehanna Steam Electric Station, Units 1 and 2, Luzerne County, Pennsylvania

Date of application for amendments: October 28, 1994, as supplemented by letter dated April 18, 1995.

Brief description of amendments: These amendments delete, from the Technical Specifications, the surveillance and operability requirements for chlorine detection and the associated Bases as a result of the removal of bulk quantities of gaseous chlorine from the site.

Date of issuance: June 19, 1995.

Effective date: As of the date of issuance, to be implemented within 30 days.

Amendment Nos.: 147 and 117.

Facility Operating License Nos. NPF–14 and NPF–22. The amendments revised the Technical Specifications.

Date of initial notice in **Federal Register***:* December 21, 1994 (59 FR 65821). The April 18, 1995, letter provided clarifying information that did not change the initial proposed no significant hazards consideration determination.

The Commission's related evaluation of the amendments is contained in a Safety Evaluation dated June 19, 1995.

No significant hazards consideration comments received: No.

Local Public Document Room location: Osterhout Free Library, Reference Department, 71 South Franklin Street, Wilkes-Barre, Pennsylvania 18701.

Philadelphia Electric Company, Docket Nos. 50–352 and 50–353, Limerick Generating Station, Units 1 and 2, Montgomery County, Pennsylvania

Date of application for amendments: August 31, 1994.

Brief description of amendments: This amendment revises the Technical Specifications to permit the operability requirement for the Feedwater/Main Turbine Trip System Actuation Instrumentation to be Operational Condition 1 greater than or equal to 25% Rated Thermal Power.

Date of issuance: June 13, 1995.

Effective date: June 13, 1995.

Amendment Nos. 91 and 55.

Facility Operating License Nos. NPF–39 and NPF–85. The amendments revised the Technical Specifications.

Date of initial notice in **Federal Register:** November 9, 1994 (59 FR 55884) The Commission's related evaluation of the amendments is contained in a Safety Evaluation dated June 13, 1995.

No significant hazards consideration comments received: No.

Local Public Document Room location: Pottstown Public Library, 500 High Street, Pottstown, Pennsylvania 19464.

Philadelphia Electric Company, Docket Nos. 50–352 and 50–353, Limerick Generating Station, Units 1 and 2, Montgomery County, Pennsylvania

Date of application for amendments: August 23, 1994.

Brief description of amendments: Remove the 125/250 Vdc Class 1E Battery Load Cycle Table from the technical specifications (TS) and rephrase the surveillance requirements to be consistent with NUREG–1433, ''Standard Technical Specifications'', and correct Amendments 71 and 34, dated June 28, 1994, to change certain surveillance requirement intervals from 24 months to 18 months.

Date of issuance: June 19, 1995.

Effective date: June 19, 1995.

Amendment Nos. 92 and 56.

Facility Operating License Nos. NPF–39 and NPF–85. The amendments revised the Technical Specifications.

Date of initial notice in **Federal Register:** October 12, 1994 (59 FR 51624) The Commission's related evaluation of the amendments is contained in a Safety Evaluation dated June 19, 1995.

No significant hazards consideration comments received: No.

Local Public Document Room location: Pottstown Public Library, 500 High Street, Pottstown, Pennsylvania 19464.

Philadelphia Electric Company, Docket Nos. 50–352 and 50–353, Limerick Generating Station, Units 1 and 2, Montgomery County, Pennsylvania

Date of application for amendments: August 31, 1994.

Brief description of amendments: These amendments relocate the requirements of TS 3/4.8.4.1, ''Primary Containment Penetration Conductor Overcurrent Protective Devices,'' to the Updated Final Safety Analysis Report and plant procedures.

Date of issuance: June 22, 1995.

Effective date: June 22, 1995.

Amendment Nos. 93 and 57.

Facility Operating License Nos. NPF–39 and NPF–85. The amendments revised the Technical Specifications.

Date of initial notice in **Federal Register:** November 9, 1994 (59 FR 55884) The Commission's related evaluation of the amendments is contained in a Safety Evaluation dated June 22, 1995.

No significant hazards consideration comments received: No.

Local Public Document Room location: Pottstown Public Library, 500 High Street, Pottstown, Pennsylvania 19464.

Philadelphia Electric Company, Docket Nos. 50–352 and 50–353, Limerick Generating Station, Units 1 and 2, Montgomery County, Pennsylvania

Date of application for amendments: August 12, 1994, as supplemented by letter dated March 29, 1995.

Brief description of amendments: These amendments revise the action statements regarding emergency core cooling systems to allow continued operation in the event that the high pressure coolant injection system, one core spray subsystem and/or one low pressure coolant injection subsystem are inoperable.

Date of issuance: June 22, 1995.

Effective date: As of the date of issuance to be implemented within 30 days.

Amendment Nos. 94 and 58.

Facility Operating License Nos. NPF–39 and NPF–85. The amendments revised the Technical Specifications.

Date of initial notice in **Federal Register:** October 12, 1994 (59 FR 51623). The March 29, 1995, letter provided clarifying information that did not change the initial proposed no significant hazards consideration determination.

The Commission's related evaluation of the amendment is contained in a Safety Evaluation dated June 22, 1995.

No significant hazards consideration comments received: No.

Local Public Document Room location: Pottstown Public Library, 500 High Street, Pottstown, Pennsylvania 19464.

Philadelphia Electric Company, Docket Nos. 50–352 and 50–353, Limerick Generating Station, Units 1 and 2, Montgomery County, Pennsylvania

Date of application for amendments: August 31, 1994.

Brief description of amendments: The amendments permit the operability of one Low Pressure Coolant Injection subsystem of Residual Heat Removal while the subsystem is aligned and operating in the Shutdown Cooling Mode during Operational Conditions (OPCONs) 4 and 5.

Date of issuance: June 22, 1995.

Effective date: June 22, 1995.

Amendment Nos. 95 and 59.

Facility Operating License Nos. NPF–39 and NPF–85. The amendments revised the Technical Specifications.

Date of initial notice in **Federal Register:** November 9, 1994 (59 FR 55884). The Commission's related evaluation of the amendments is contained in a Safety Evaluation dated June 22, 1995.

No significant hazards consideration comments received: No.

Local Public Document Room location: Pottstown Public Library, 500 High Street, Pottstown, Pennsylvania 19464.

Public Service Electric & Gas Company, Docket Nos. 50–272 and 50–311, Salem Nuclear Generating Station, Unit Nos. 1 and 2, Salem County, New Jersey

Date of application for amendments: November 18, 1994.

Brief description of amendments: The amendments revise the Reactivity Control System Technical Specification Limiting Conditions for Operation for boration flow paths and charging pumps by reducing the number of operable charging pumps required for boron addition in Mode 4 from two to one.

Date of issuance: June 12, 1995.

Effective date: As of the date of issuance, to be implemented within 60 days.

Amendment Nos. 169 and 151.

Facility Operating License Nos. DPR–70 and DPR–75. The amendments revised the Technical Specifications.

Date of initial notice in **Federal Register:** January 4, 1995 (60 FR 505). The Commission's related evaluation of the amendments is contained in a Safety Evaluation dated June 12, 1995.

No significant hazards consideration comments received: No.

Local Public Document Room location: Salem Free Public Library, 112 West Broadway, Salem, New Jersey 08079.

Public Service Electric & Gas Company, Docket Nos. 50–272 and 50–311, Salem Nuclear Generating Station, Unit Nos. 1 and 2, Salem County, New Jersey

Date of application for amendments: June 29, 1994, as supplemented August 8, 1994, and May 2, 1995.

Brief description of amendments: The amendments increase the Technical Specification minimum volume of emergency diesel generator fuel oil contained in the Diesel Fuel Oil Storage Tanks at both units of the Salem station.

Date of issuance: June 20, 1995.

Effective date: As of the date of issuance, to be implemented within 60 days.

Amendment Nos. 170 and 152.

Facility Operating License Nos. DPR–70 and DPR–75. The amendments revised the Technical Specifications.

Date of initial notice in **Federal Register:** August 17, 1994 (59 FR 42346). The August 8, 1994, and May 2, 1995, letters provided clarifying information that did not change the initial proposed no significant hazards consideration determination.

The Commission's related evaluation of the amendments is contained in a Safety Evaluation dated June 20, 1995.

No significant hazards consideration comments received: No.

Local Public Document Room location: Salem Free Public Library, 112 West Broadway, Salem, New Jersey 08079.

South Carolina Electric & Gas Company, South Carolina Public Service Authority, Docket No. 50–395, Virgil C. Summer Nuclear Station, Unit No. 1, Fairfield County, South Carolina

Date of application for amendment: March 6, 1995, as supplemented on May 5, 1995 and June 6, 1995.

Brief description of amendment: The amendment deletes a license condition that required the licensee to maintain a seismic monitoring network around the Monticello Reservoir.

Date of issuance: June 13, 1995.

Effective date: June 13, 1995.

Amendment No.: 124.

Facility Operating License No. NPF–12. Amendment revises the operating license.

Date of initial notice in **Federal Register:** March 29, 1995 (60 FR 16201). The May 5, 1995 and June 6, 1995 submittals provided supplemental information that did not change the initial proposed no significant hazards consideration determination. The Commission's related evaluation of the amendment is contained in a Safety Evaluation dated June 13, 1995.

No significant hazards consideration comments received: No.

Local Public Document Room location: Fairfield County Library, 300 Washington Street, Winnsboro, SC 29180.

Tennessee Valley Authority, Docket Nos. 50–259, 50–260 and 50–296, Browns Ferry Nuclear Plant, Units 1, 2 and 3, Limestone County, Alabama

Date of application for amendments: November 15, 1994; superseded March 7, 1995 (TS 350).

Brief Description of amendment: The amendments remove the frequencies specified in the Technical Specifications for performing audits and delete the requirement to perform the Radiological Emergency Plan, Physical Security Plan, and Safeguard Contingency Plan reviews.

Date of issuance: June 19, 1995.

Effective Date: June 19, 1995.

Amendment Nos.: 221, 236 and 195.

Facility Operating License Nos. DPR–33, DRP–52 and DPR–68: Amendments revised the Technical Specifications.

Date of initial notice in **Federal Register:** December 21, 1994 (59 FR 65823); superseded March 29, 1995 (60 FR 16202). The Commission's related evaluation of the amendment is contained in a Safety Evaluation dated June 19, 1995.

No significant hazards consideration comments received: None.

Local Public Document Room Location: Athens Public Library, South Street, Athens, Alabama 35611.

Tennessee Valley Authority, Docket Nos. 50–327 and 50–328, Sequoyah Nuclear Plant, Units 1 and 2, Hamilton County, Tennessee

Date of application for amendments: April 6, 1995 (TS 95–02).

Brief description of amendments: The amendments add a limiting condition for operation that allows equipment to be returned to service under administrative control to perform operability testing and establishes the time interval to place an inoperable channel in the bypass condition.

Date of issuance: June 13, 1995.

Effective date: June 13, 1995.

Amendment Nos.: 202 and 192.

Facility Operating License Nos. DPR–77 and DPR–79: Amendments revise the technical specifications.

Date of initial notice in **Federal Register:** April 26, 1995 (60 FR 20530). The Commission's related evaluation of the amendment is contained in a Safety Evaluation dated June 13, 1995.

No significant hazards consideration comments received: None.

Local Public Document Room location: Chattanooga-Hamilton County Library, 1101 Broad Street, Chattanooga, Tennessee 37402.

Tennessee Valley Authority, Docket Nos. 50–327 and 50–328, Sequoyah Nuclear Plant, Units 1 and 2, Hamilton County, Tennessee

Date of application for amendments: April 6, 1995 (TS 95–05).

Brief description of amendments: The amendments revise the technical specifications by deleting Tables 3.6–1, 3.6–2, and 3.8–2 and referenced to them, incorporating related guidance and justification, and modifying the specification related to electrical equipment protective devices in accordance with Generic Letter 91–08.

Date of issuance: June 13, 1995.

Effective date: June 13, 1995.

Amendment Nos.: 203 and 193.

Facility Operating License Nos. DPR–77 and DPR–79: Amendments revise the technical specifications.

Date of initial notice in **Federal Register:** May 10, 1995 (60 FR 24919). The Commission's related evaluation of the amendment is contained in a Safety Evaluation dated June 13, 1995.

No significant hazards consideration comments received: None.

Local Public Document Room location: Chattanooga-Hamilton County Library, 1101 Broad Street, Chattanooga, Tennessee 37402.

Tennessee Valley Authority, Docket Nos. 50–327 and 50–328, Sequoyah Nuclear Plant, Units 1 and 2, Hamilton County, Tennessee

Date of application for amendments: April 6, 1995 (TS 95–06).

Brief description of amendments: The amendments remove the technical specification requirements related to crane travel over the spent fuel pool.

Date of issuance: June 14, 1995.

Effective date: June 14, 1995.

Amendment Nos.: 204 and 194.

Facility Operating License Nos. DPR–77 and DPR–79: Amendments revise the technical specifications.

Date of initial notice in **Federal Register:** April 26, 1995 (60 FR 20529). The Commission's related evaluation of the amendment is contained in a Safety Evaluation dated June 14, 1995.

No significant hazards consideration comments received: None.

Local Public Document Room location: Chattanooga-Hamilton County Library, 1101 Broad Street, Chattanooga, Tennessee 37402.

Vermont Yankee Nuclear Power Corporation, Docket No. 50–271, Vermont Yankee Nuclear Power Station, Vernon, Vermont

Date of application for amendment: October 28, 1994.

Brief description of amendment: The amendment removes the Neutron Monitoring System and Control Rod Position instrumentation from the Vermont Yankee Technical Specifications for post-accident monitoring and incorporates administrative changes.

Date of issuance: June 20, 1995.

Effective date: As of the date of issuance to be implemented within 30 days.

Amendment No.: 145.

Facility Operating License No. DPR–28. Amendment revised the Technical Specifications.

Date of initial notice in **Federal Register:** May 10, 1995 (60 FR 24922). The Commission's related evaluation of the amendment is contained in a Safety Evaluation dated June 20, 1995.

No significant hazards consideration comments received: No.

Local Public Document Room location: Brooks Memorial Library, 224 Main Street, Brattleboro, VT 05301.

Virginia Electric and Power Company, Docket Nos. 50–280 and 50–281, Surry Power Station, Unit Nos. 1 and 2, Surry County, Virginia.

Date of application for amendments: June 9, 1994.

Brief description of amendments: These amendments modify the Chemical and Volume Control System and Safety Injection System Technical Specifications.

Date of issuance: May 31, 1995.

Effective date: May 31, 1995.

Amendment Nos. 199 and 199.

Facility Operating License Nos. DPR–32 and DPR–37: Amendments revised the Technical Specifications.

Date of initial notice in **Federal Register:** July 20, 1994 (59 FR 37089). The Commission's related evaluation of the amendment is contained in a Safety Evaluation dated May 31. 1995.

No significant hazards consideration comments received: No.

Local Public Document Room location: Swem Library, College of William and Mary, Williamsburg, Virginia 23185.

Dated at Rockville, Maryland, this 27th day of June 1995.

For the Nuclear Regulatory Commission.

Jack W. Roe,

Director, Division of Reactor Projects—III/IV, Office of Nuclear Reactor Regulation.

[FR Doc. 95–16249 Filed 7–3–95; 8:45 am]

BILLING CODE 7590–01–P

Standard Technical Specifications (Revision 1): Availability

AGENCY: Nuclear Regulatory Commission.

ACTION: Notice of availability.

SUMMARY: The U.S. Nuclear Regulatory Commission (NRC) previously noticed the availability of five sets of improved Standard Technical Specifications (STS), Revision 0 that were issued on September 29, 1992 [57 FR 55602]. The NRC issued improved STS, Revision 0 for implementation by the volunteering leadplant licensees and placed copies in the NRC public document room. Subsequently, the NRC revised the improved STS (Revision 1) to incorporate additional comments from the Nuclear Steam Supply System (NSSS) owners groups and the NRC.

The STS for each NSSS vendor are as follows:

NUREG–1430, ''Standard Technical Specifications, Babcock and Wilcox Plants''

NUREG–1431, ''Standard Technical Specifications, Westinghouse Plants''

NUREG–1432, ''Standard Technical Specifications, Combustion Engineering Plants''

NUREG–1433, ''Standard Technical Specifications, General Electric Plants, BWR/4''

NUREG–1434, ''Standard Technical Specifications, General Electric Plants, BWR/6''

The NRC staff operates the Tech Spec Plus Bulleting Board System (BBS) as a public service for anyone who wishes to obtain copies of electronic files of the STS. The NRC developed the STS with WordPerfect, version 5.1, software and has placed Revision 1 of the improved STS on the BBS in compressed form using ''ZIP'' data compression software to reduce the time required to download the files. The NRC BBS may be reached by telephone at 1–800–679–5784. Access to the BBS is available using a personal computer and modem with any standard communication software package. The BBS operates 24 hours a day at up to 9600 baud with communication parameters set at 8 data bits, no parity, and 1 stop bit (8–N–1). The system operator is Tom Dunning. He can be reached by telephone (voice) at (301) 415–1189, if assistance is needed.

Copies of the STS, Revision 1, are available for inspection or copying for a fee in the NRC Public Document Room, 2120 L Street NW., Lower Level of the Gelman Building, Washington, DC 20555. Requests for copies may be made by writing to the NRC Public Document Room or by facsimile at (202)–634–3343, or by telephone (202)–634–3273. Those requesting copies should identify the STS by NUREG number and title as noted above.

In addition, NUREG copies are available from the Superintendent of Documents, U.S. Government Printing Office, P.O. Box 37082, Washington, DC 20013–7082.

FOR FURTHER INFORMATION CONTACT: Mary Lynn Reardon, U.S. Nuclear Regulatory Commission, Washington, DC 20555. Telephone (301) 415–1177.

Dated at Rockville, Maryland, this 27th day of June, 1995.

For the Nuclear Regulatory Commission.

Christopher I. Grimes,

Chief, Technical Specifications Branch, Division of Project Support, Office of Nuclear Reactor Regulation.

[FR Doc. 95–16370 Filed 7–3–95; 8:45 am]

BILLING CODE 7590–01–M

RESOLUTION TRUST CORPORATION

Coastal Barrier Improvement Act; Property Availability; Millwood Estates, Clarke County, VA; Pine Island, Lee County, FL

AGENCY: Resolution Trust Corporation.

ACTION: Notice.

SUMMARY: Notice is hereby given that the properties known as Millwood Estates, located in Boyce, Clarke County, Virginia, and Pine Island, located in Pine Island, Lee County, Florida, are affected by Section 10 of the Coastal Barrier Improvement Act of 1990 as specified below.

DATES: Written notice of serious interest to purchase or effect other transfer of all or any portion of these properties may be mailed or faxed to the RTC until October 3, 1995.

ADDRESSES: Copies of detailed descriptions of these properties, including maps, can be obtained from or are available for inspection by contacting the following person: Mr. Dan Hummer, Resolution Trust Corporation, Atlanta Field Office, 245 Peacetree Center Avenue, NE., Marquis One Tower, 10th Floor, Atlanta, GA 30303, (404) 230–6594; Fax (404) 230–8159.

SUPPLEMENTARY INFORMATION: The Millwood Estates property is located at

the northeast intersection of U.S. Highway 17/50 and Blandy Lane, southeast of Boyce, Virginia. The site has recreational value and consists of approximately 111.89 acres of undeveloped land used as an equestrian estate with a manor house, stable, and some tenant houses. This property is adjacent to the Blandy Experimental Farm, a research center operated by the University of Virginia, which is managed for natural resource conservation purposes as the State Arboretum.

The Pine Island property is located along the north side of Pine Island Road, Pine Island, Florida, east of Avenue D. The site consists of approximately 54 acres of undeveloped land and is heavily vegetated. The property contains about 23 acres of wetlands and has a high potential for archaeological resources. This property is adjacent to the Charlotte Harbor State Reserve which is managed for natural resource conservation purposes. These properties are covered property within the meaning of Section 10 of the Coastal Barrier Improvement Act of 1990, P.L. 101–591 (12 U.S.C. 1441a–3).

Written notice of serious interest in the purchase or other transfer of all or any portion of these properties must be received on or before October 3, 1995 by the Resolution Trust Corporation at the appropriate address stated above.

Those entities eligible to submit written notices of serious interest are:

1. Agencies or entities of the Federal government;
2. Agencies or entities of State or local government; and,
3. ''Qualified organizations'' pursuant to section 170(h)(3) of the Internal Revenue Code of 1986 (26 U.S.C. 170(h)(3)).

Written notices of serious interest must be submitted in the following form:

Notice of Serious Interest

RE: [insert name of property]
Federal Register Publication Date: July 5, 1995

1. Entity name.
2. Declaration of eligibility to submit Notice under Criteria set forth in the Coastal Barrier Improvement Act of 1990, P.L. 101–591, section 10(b)(2), (12 U.S.C. 1441a–3(b)(2)), including, for qualified organizations, a determination letter from the United States Internal Revenue Service regarding the organization's status under section 170(h)(3) of the U.S. Internal Revenue Code (26 U.S.C. 170(h)(3)).
3. Brief description of proposed terms of purchase or other offer for all or any portion of the property (e.g., price, method of financing, expected closing date, etc.).
4. Declaration of entity that it intends to use the property for wildlife refuge, sanctuary, open space, recreational, historical, cultural, or natural resource conservation purposes (12 U.S.C. 1441a–3(b)(4)), as provided in a clear written description of the purpose(s) to which the property will be put and the location and acreage of the area covered by each purpose(s) including a declaration of entity that it will accept the placement, by the RTC, of an easement or deed restriction on the property consistent with its intended conservation use(s) as stated in its notice of serious interest.
5. Authorized Representative (Name/Address/Telephone/Fax).

List of Subjects

Environmental protection.

Dated: June 28, 1995.
Resolution Trust Corporation.

William J. Tricarico,
Assistant Secretary.

[FR Doc. 95–16356 Filed 7–3–95; 8:45 am]

BILLING CODE 6714–01–M

SECURITIES AND EXCHANGE COMMISSION

Issuer Delisting; Notice of Application To Withdraw From Listing and Registration; (Goldcorp Inc., Class A Subordinate Voting Shares, Class B Shares) File No. 1–12970

June 28, 1995.

Goldcorp Inc. (''Company'') has filed an application with the Securities and Exchange Commission (''Commission''), pursuant to Section 12(d) of the Securities Exchange Act of 1934 (''Act'') and Rule 12d2–2(d) promulgated thereunder, to withdraw the above specified securities (''Securities'') from listing and registration on the American Stock Exchange, Inc. (''Amex'').

The reasons alleged in the application for withdrawing the Securities from listing and registration include the following:

According to the Company, in addition to being listed on the Amex, the Securities are listed on the New York Stock Exchange, Inc. (''NYSE''). The Securities commenced trading on the NYSE at the opening of business on June 16, 1995 and concurrently therewith the Securities were suspended from trading on the Amex.

In making the decision to withdraw the Securities from listing on the Amex, the Company considered the direct and indirect costs and expenses attendant in maintaining the dual listing of its securities on the NYSE and on the Amex. The Company does not see any particular advantage in the dual trading of the Securities and believes that dual listing would fragment the market for the Securities.

Any interested person may, on or before July 20, 1995 submit by letter to the Secretary of the Securities and Exchange Commission, 450 Fifth Street, NW., Washington, DC 20549, facts bearing upon whether the application has been made in accordance with the rules of the exchanges and what terms, if any, should be imposed by the Commission for the protection of investors. The Commission, based on the information submitted to it, will issue an order granting the application after the date mentioned above, unless the Commission determines to order a hearing on the matter.

For the Commission, by the Division of Market Regulation, pursuant to delegated authority.

Jonathan G. Katz,
Secretary.

[FR Doc. 95–16353 Filed 7–3–95; 8:45 am]

BILLING CODE 8010–01–M

[Rel. No. IC–21172; International Series Release No. 822; 812–9408]

The Industrial Finance Corporation of Thailand

June 28, 1995.

AGENCY: Securities and Exchange Commission (''SEC'').

ACTION: Notice of Application for Exemption under the Investment Company Act of 1940 (the ''Act'').

APPLICANT: The Industrial Finance Corporation of Thailand.

RELEVANT ACT SECTIONS: Order requested under section 6(c) of the Act that would exempt applicant from all provisions of the Act.

SUMMARY OF APPLICATION: Applicant, a development finance institution established by the government of the Kingdom of Thailand (the ''Thai Government''), requests an order exempting it from all provisions of the Act in connection with the offer and sale of its notes in the United States.

FILING DATE: The application was filed on December 30, 1994, and amended on May 22, 1995.

HEARING OR NOTIFICATION OF HEARING: An order granting the application will be issued unless the SEC orders a hearing. Interested persons may request a hearing by writing to the SEC's Secretary and serving applicant with a

copy of the request, personally or by mail. Hearing requests should be received by the SEC by 5:30 p.m. on July 24, 1995 and should be accompanied by proof of service on applicant, in the form of an affidavit or, for lawyers, a certificate of service. Hearing requests should state the nature of the writer's interest, the reason for the request, and the issues contested. Persons may request notification of a hearing by writing to the SEC's Secretary.

ADDRESSES: Secretary, SEC, 450 5th Street NW., Washington, DC 20549. Applicant, c/o Walter A. Looney, Jr., Simpson Thacher & Bartlett, 32nd Floor, Asia Pacific Finance Tower, 3 Garden Road, Central, Hong Kong.

FOR FURTHER INFORMATION CONTACT: Sarah A. Buescher, Staff Attorney, at (202) 942–0573, or Robert A. Robertson, Branch Chief, at (202) 942–0564 (Division of Investment Management, Office of Investment Company Regulation).

SUPPLEMENTARY INFORMATION: The following is a summary of the application. The complete application may be obtained for a fee at the SEC's Public Reference Branch.

Applicant's Representations

1. Applicant is a specialized development bank organized by the Thai Government in 1959 pursuant to the Industrial Finance Corporation of Thailand Act (the ''IFCT Act''). The Thai Government established applicant to promote the development of private industrial enterprises and to facilitate the growth of domestic capital markets in Thailand by carrying out credit and financial transactions. Applicant offers its loans with due consideration of specific Thai Government objectives and the particular development needs of the Thai economy. Applicant may be considered an investment company, and it requests an exemption from all provisions of the Act.

2. Applicant provides financial services to a wide range of industries, including manufacturing, agriculture, tourism, and selected service and related industries. These services include long-term loans, medium-term loans, and loan guarantees to finance investment in fixed assets and in office construction for selected industries. Lending constitutes the largest part of applicant's operations, with long-term, medium-term, and working capital loans comprising approximately 65% of applicant's total assets as of December 31, 1994. All of applicant's long-term and medium-term loans are held by applicant to maturity. The sole source of turnover in applicant's loan portfolio is the maturity of existing loans and the making of new loans. Applicant does not buy or sell loans in the secondary market.

3. In addition to its principal business of extending long-term loans, applicant has the ability to issue short-term promissory notes which are similar to certificates of deposit in term and tenor, and can be payable on demand. Promissory notes are an alternative to deposit taking as a method of procuring funds from the public in Thailand. Applicant also provides concessional loans and financing through equity investments, and applicant has established subsidiaries and affiliated companies to offer other industrial and financial investment services.

4. Section 12 of the IFCT Act authorizes applicant to borrow money in both the domestic and foreign capital markets in order to lend funds to Thai borrowers, and to invest any capital not immediately required for its operations in a securities portfolio. Applicant temporarily invests funds awaiting disbursement to its clients in short-term debt securities such as promissory notes or bills or exchange issued by financial institutions and companies. A substantial portion of applicant's assets consist of obligations of borrowers to repay loans made to them by applicant and investments to facilitate applicant's cash flow management.

5. Applicant is not considered a commercial bank under Thai law. Consequently, it is presently prohibited from accepting deposits from the public. In February 1995, the Thai Government introduced the first Five Year Financial System Master Plan (the ''Master Plan''), which would expand the scope of applicant's activities, and allow applicant to accept deposits. The Master Plan is a policy statement and its implementation will require legislative action.

6. Applicant is subject to extensive oversight, supervision, and regulation by the Thai Government. The IFCT Act sets forth applicant's powers, privileges, and operating guidelines. The Thai Ministry of Finance (the ''MoF'') oversees and supervises applicant's operations and policies through its statutory obligation to administer the IFCT Act. The appointment of applicant's president is also subject to the MoF's approval. Applicant's annual funding plan, which sets forth its basic business strategy and priorities for the upcoming year, must be approved by the MoF, and applicant must notify the MoF of the terms and conditions of all debt instruments offered by applicant. In addition, applicant must submit other reports, statements, and filings to the MoF.

7. Unlike commercial banks which are governed by the Commercial Banking Act and are under direct supervision of the Bank of Thailand (''BoT''), the Thai central bank, applicant operates under its own act. However, as a recipient of funds from the BoT which applicant channels to industrial sectors, applicant must submit annual financial reports to the BoT and allow the BoT to examine applicant's accounts. Applicant is not subject to capital adequacy requirements imposed by the BoT but complies with such requirements.

8. Applicant's shares are listed on the Stock Exchange of Thailand (the ''SET''), and applicant publishes all information, including annual reports and quarterly interim financial statements, which is customarily provided or is required to be published by the SET and the Securities and Exchange Commission of Thailand (the ''Thai SEC''). Applicant's external independent auditors perform annual audits of applicant's financial statements. The Thai SEC also regulates the timing and content of all disclosures of information made by applicant.

9. Applicant proposes to issue and sell in the United States medium-term notes (the ''Notes'') in an aggregate principal amount of up to US$500,000,000 from time to time outstanding. Notes initially issued in the United States will have a minimum maturity of nine months and will be direct, unsecured obligations of applicant and rank *pari passu* among themselves and with all other unsecured indebtedness of applicant for moneys borrowed. Applicant does not contemplate that its obligations under the Notes will be guaranteed by the Thai Government. Any offering of Notes may be registered under the Securities Act of 1933, as amended (the ''Securities Act''), or made pursuant to an exemption from the registration requirements of the Securities Act. The offer and sale of the Notes will provide applicant with an alternate source of funding to supplement its borrowing in Thai and non-U.S. international capital markets. Applicant will use the proceeds of the sale of the Notes to provide funds for making loans in the ordinary course of its business.

Applicant's Legal Analysis

1. Section 3(a)(3) of the Act defines an investment company to include any issuer engaged in the business of investing, reinvesting, owning, holding or trading in securities, and that owns or proposes to acquire investment securities having a value exceeding 40%

of the issuer's total assets. As of December 31, 1994, approximately 65% of applicant's assets consisted of obligations of borrowers to repay loans made to them by applicant, and approximately 25% of applicant's assets consisted of other debt securities and equity investments. Such obligations and investments could be deemed to be ''investment securities'' within the meaning of section 3(a)(3). As a result, applicant may be deemed to be an ''investment company'' under the Act.

2. Section 6(c) of the Act provides that the SEC may exempt any person or transaction from any provision of the Act or any rule thereunder to the extent that such exemption is necessary in the public interest and consistent with the protection of investors and the purposes fairly intended by the policy and provisions of the Act. Applicant requests an order under section 6(c) exempting it from all provisions of the Act.

3. Rule 3a–6 under the Act exempts foreign banks from the definition of investment company for all purposes under the Act. A ''foreign bank'' is defined to include a banking institution ''engaged substantially in commercial banking activity'' which, in turn, is defined to include ''extending commercial and other types of credit, and accepting demand and other types of deposits.'' Although applicant conducts several of the activities associated with traditional commercial banks, presently applicant does not technically ''accept demand and other types of deposits'' and therefore may not be eligible for the exemption provided by rule 3a–6. Applicant believes that it is functionally equivalent to a foreign bank because it offers financial services and issues financial products similar to those offered and issued by banks, and it is subject to extensive oversight, supervision, and regulation by the Thai Government.

4. Applicant also believes that the rationale of Congress and the SEC in promulgating rules under the Act in exempting foreign financial institutions applies to applicant. The development loans made by applicant are not completely liquid, mobile, and readily negotiable, and applicant is not in the business of investing, reinvesting, owning, holding, or trading securities. Applicant does not consider itself to be an investment company, and believes that it is within the category of institutions for which the SEC sought to provide relief. Applicant represents that its operations do not lend themselves to the abuses against which the Act is directed, and it believes that it satisfies the standards of relief under section 6(c).

Condition

Applicant agrees that the order of the SEC granting the requested relief shall be subject to the condition that in connection with any offering by applicant of Notes in the United States applicant will appoint an agent in the United States to accept service of process in any suit, action or proceeding brought with respect to such Notes instituted in any state or federal court in The City or State of New York. Applicant will expressly submit to the jurisdiction of the New York State and United States Federal courts sitting in The City of New York with respect to any such suit, action or proceeding. Such appointment of an agent to accept service of process and such consent to jurisdiction shall be irrevocable until all amounts due and to become due in respect thereof have been paid. No such submission to jurisdiction or appointment of agent for service of process will affect the right of a holder of any such security to bring suit in any court which shall have jurisdiction over applicant by virtue of the offer and sale of such securities or otherwise.

For the Commission, by the Division of Investment Management, pursuant to delegated authority.

Margaret H. McFarland,

Deputy Secretary.

[FR Doc. 95–16385 Filed 7–3–95; 8:45 am]

BILLING CODE 8010–01–M

Issuer Delisting; Notice of Application to Withdraw from Listing and Registration; (Monaco Finance, Inc., Class A Common Stock, $.01 Par Value) File No. 1–10626

June 28, 1995.

Monaco Finance, Inc. (''Company'') has filed an application with the Securities and Exchange Commission (''Commission''), pursuant to Section 12(d) of the Securities Exchange Act of 1934 (''Act'') and Rule 12d2–2(d) promulgated thereunder, to withdraw the above specified security (''Security'') from listing and registration on the Boston Stock Exchange, Inc. (''BSE'').

The reasons alleged in the application for withdrawing the Security from listing and registration include the following:

According to the Company, this delisting is due to the fact that Monaco Finance became listed on Nasdaq/NMS in 1994. The Company believed that trading on the BSE was minimal. In view of the listing on Nasdaq/NMS, the Company felt that it was not economical to continue to pay listing fees on both the BSE and Nasdaq.

Any interested person may, on or before July 20, 1995 submit by letter to the Secretary of the Securities and Exchange Commission, 450 Fifth Street, NW., Washington, D.C. 20549, facts bearing upon whether the application has been made in accordance with the rules of the exchanges and what terms, if any, should be imposed by the Commission for the protection of investors. The Commission, based on the information submitted to it, will issue an order granting the application after the date mentioned above, unless the Commission determines to order a hearing on the matter.

For the Commission, by the Division of Market Regulation, pursuant to delegated authority.

Jonathan G. Katz,

Secretary.

[FR Doc. 95–16352 Filed 7–3–95; 8:45 am]

BILLING CODE 8010–01–M

Issuer Delisting; Notice of Application to Withdraw from Listing and Registration; (Orthopedic Technology, Inc., Common Stock, $.01 Par Value) File No. 1–11828

June 28, 1995.

Orthopedic Technology, Inc. (''Company'') has filed an application with the Securities and Exchange Commission (''Commission''), pursuant to Section 12(d) of the Securities Exchange Act of 1934 (''Act'') and Rule 12d2–2(d) promulgated thereunder, to withdraw the above specified security (''Security'') from listing and registration on the Pacific Stock Exchange, Incorporated (''PSE'').

The reasons alleged in the application for withdrawing the Security from listing and registration include the following:

According to the Company, the reasons for the delisting from the PSE is that the Company's Security is actively quoted on the Nasdaq National Market (''NNM''), and the vast majority of trading in the Company's stock occurs on the NNM. The Company wishes to delist from the PSE so that it may save the costs associated with its current duplicative listing. The Company has written to the PSE requesting voluntary delisting and has been informed by the PSE that its Equity Listing Committee has no comment on this request.

Any interested person may, on or before July 20, 1995, submit by letter to the Secretary of the Securities and Exchange Commission, 450 Fifth Street NW., Washington, DC 20549, facts

bearing upon whether the application has been made in accordance with the rules of the exchanges and what terms, if any, should be imposed by the Commission for the protection of investors. The Commission, based on the information submitted to it, will issue an order granting the application after the date mentioned above, unless the Commission determines to order a hearing on the matter.

For the Commission, by the Division of Market Regulation, pursuant to delegated authority.

Jonathan G. Katz,

Secretary.

[FR Doc. 95–16354 Filed 7–3–95; 8:45 am]

BILLING CODE 8010–01–M

[Release No. 34–35912; File No. SR–Amex–95–25]

Self-Regulatory Organizations; Notice of Filing and Immediate Effectiveness of Proposed Rule Change by the American Stock Exchange, Inc. Relating to Rule 590 Minor Rule Violation Fine Systems

June 28, 1995.

Pursuant to Section 19(b)(1) of the Securities Exchange Act of 1934 (''Act''), 15 U.S.C. § 78s(b)(1), notice is hereby given that on June 20, 1995, the American Stock Exchange, Inc. (''Amex'' or ''Exchange'') filed with the Securities and Exchange Commission (''Commission'') the proposed rule change as described in Items I, II, and III below, which Items have been prepared by the self-regulatory organization. The Commission is publishing this notice to solicit comments on the proposed rule change from interested persons.

I. Self-Regulatory Organization's Statement of the Terms of Substance of the Proposed Rule Change

The Exchange is amending its Minor Rule Violation Fine Systems (Rule 590) to add a number of additional minor rule violations to Rule 590. The text of the proposed rule change is as follows [new text is italicized; deleted text is bracketed]:

Minor Rule Violation Fine Systems

Part I

General Rule Violations

Rule 590

(a) through (d): No Change.

(e) The [maximum] fines authorized under *Paragraphs (g) and (h) of* Part 1 of this Rule [(i.e.,] for violations [subsequent to] *for* a second offense [as set forth in Paragraphs (g) and (h)),] *and for subsequent offenses* may be imposed [for] *in the case of* a first or second offense if warranted under the circumstances.

(f): No Change.

(g) The following is a list of the rule violations and applicable fines that may be imposed by the Exchange's Enforcement Department pursuant to Part 1 of this Rule.

1 through 6: No Change.

7. [Failure to submit audit trail data or failure to submit accurate audit trail data. (Article V, Section (4)(h), (j) and (k) and Rule 31)] *Violation of the Exchange's policy with respect to the proper submission of audit trail data, including both the failure to submit audit trail data and the failure to submit accurate audit trail data.*

8 through 12: No Change.

(h) The following is a list of the rule violations and applicable fines that may be imposed by the Exchange's Minor Floor Violations Disciplinary Committee pursuant to Part 1 of this Rule.

1 through 7: No Change.

8. Violation of the ''2, 1, and 1/2 Point Rule.'' (Rule 154, Commentary .08)

9. Failure to comply with Stop Order procedures and approval requirements. (Rule 154, Commentary .04)

10. Failure to obtain Floor Official approval when establishing, increasing, or liquidating a position. (Rule 170, Commentary .01 and .02)

11. Violation of Intermarket Trading System (ITS) rules relating to Pre-Opening Applications (Rule 232) and Trade Throughs, Locked Markets, and the Block Trade Policy (Rule 236).

12. Failure to comply with the requirements relating to agency crosses. (Rule 126(g), Commentary .02)

13. Failure to submit a properly completed Specialist Floor Broker Questionnaire. (Rule 30)

14. Failure to obtain Exchange approval of member or member firm proprietary electronic devices or systems used on the Exchange floor. (Rule 220)

II. Self-Regulatory Organization's Statement of the Purpose of, and Statutory Basis for, the Proposed Rule Change

In its filing with the Commission, the self-regulatory organization included statements concerning the purpose of and basis for the proposed rule change and discussed any comments it received on the proposed rule change. The text of these statements may be examined at the places specified in Item IV below. The self-regulatory organization has prepared summaries, set forth in Sections A, B, and C below, of the most significant aspects of such statements.

A. Self-Regulatory Organization's Statement of the Purpose of, and Statutory Basis for, the Proposed Rule Change

1. Purpose

Currently under Paragraph (g) of Part 1 of Rule 590, the Exchange's Enforcement Department is authorized, after a matter has been referred to it, to impose fines ranging from $500 to $2,500 against individuals and from $1,000 and $5,000 against member firms, for a series of minor rule violations listed in Paragraph (g). The individual or member firm may plead guilty and pay the fine or contest the charge and request a hearing before an Exchange Disciplinary Panel. Under Paragraph (h), the Exchange's Minor Floor Violation Disciplinary Committee is authorized to impose the same fines against individuals and member firms for a series of additional minor rule violations listed in Paragraph (h). The minor violations that the Disciplinary Committee is authorized to hear are primarily floor related, while the minor violations that the Enforcement Department is responsible for generally relate to ''upstairs'' activities.

The Exchange's Minor Rule Violation Fine Systems have worked well in practice, providing for a convenient and quick resolution of minor rule violations. As a result, the Exchange would like to increase the number of minor violations covered by rule 590. It is proposed that a number of minor floor related violations now be added to Paragraph (h) of the rule. The following is a list of the additional violations for which the Minor Floor Violation Disciplinary Committee will have fining authority.

1. Violation of the ''2, 1, and ½ Point Rule.'' (Rule 154, Commentary .08)

2. Failure to comply with Stop Order procedures and approval requirements. (Rule 154, Commentary .04)

3. Failure to obtain Floor Official approval when establishing, increasing, or liquidating a position. (Rule 170, Commentary .01 and .02) [1]

4. Violation of Intermarket Trading System (ITS) rules relating to Pre-Opening Applications (Rule 232) and Trade Throughs, Locked Markets, and the Block Trade Policy. (Rule 236)

5. Failure to comply with the requirements relating to agency crosses. (Rule 126(g), Commentary .02)

6. Failure to submit a properly completed Specialist Floor Broker Questionnaire. (Rule 30)

7. Failure to obtain Exchange approval of member or member firm proprietary electronic devices or systems used on the Exchange floor. (Rule 220)

In addition to the above minor rule violations being added to Rule 590, the Exchange proposes to amend Paragraph

[1] The Exchange intends to utilize the fining authority under Rule 590 only with respect to the most technical and nonsubstantive violations of the Floor Official requirement under Rule 170. All major violations of this provision will be referred to the Enforcement Department for appropriate action.

(e) of Part 1 of the rule, which currently authorizes the imposition of the maximum fine for third and subsequent offenses in the case of a first or second offense if warranted under the circumstances. To give the Exchange greater flexibility in the administration of the rule, the rule is being amended to also authorize the imposition of the fine for a second offense in the case of a first offense, again if warranted under the circumstances. Finally, Paragraph (g) is being amended to cite to Exchange policy rather than a rule with regard to Violation 7 relating to member firm submission of audit trail data.

2. Statutory Basis

The proposed rule change is consistent with Section 6(b) of the Act in general and furthers the objectives of Section 6(b)(6) in particular in that is intended to assure that Exchange members and member firms are appropriately disciplined for rule violations.

B. Self-Regulatory Organization's Statement on Burden on Competition

The proposed rule change will impose no burden on competition.

C. Self-Regulatory Organization's Statement on Comments on the Proposed Rule Change Received from Members, Participants or Others

No written comments were solicited or received with respect to the proposed rule change.

III. Date of Effectiveness of the Proposed Rule Change and Timing for Commission Action

Because the foregoing proposed rule change: (1) does not significantly affect the protection of investors or the public interest; (2) does not impose any significant burden on competition; and (3) does not become operative for 30 days from June 20, 1995, the date on which it was filed, and the Exchange provided the Commission with written notice of its intent to file the proposed rule change at least five days prior to the filing date, it has become effective pursuant to Section 19(b)(3)(A) of the Act and Rule 19b-4(e)(6) thereunder.

At any time within 60 days of the filing of the proposed rule change, the Commission may summarily abrogate such rule change if it appears to the Commission that such action is necessary or appropriate in the public interest, for the protection of investors, or otherwise in furtherance of the purposes of the Act.

IV. Solicitation of Comments

Interested persons are invited to submit written data, views, and arguments concerning the foregoing. Persons making written submissions should file six copies thereof with the Secretary, Securities and Exchange Commission, 450 Fifth Street, N.W., Washington, D.C. 20549. Copies of the submission, all subsequent amendments, all written statements with respect to the proposed rule change that are filed with the Commission, and all written communications relating to the proposed rule change between the Commission and any person, other than those that may be withheld from the public in accordance with the provisions of 5 U.S.C. § 552, will be available for inspection and copying at the Commission's Public Reference Section, 450 Fifth Street, NW., Washington, DC 20549. Copies of such filing will also be available for inspection and copying at the principal office of the Exchange. All submissions should refer to File No. SR–Amex–95–25 and should be submitted by July 26, 1995.

For the Commission, by the Division of Market Regulation, pursuant to delegated authority.

Margaret H. McFarland,

Deputy Secretary.

[FR Doc. 95–16394 Filed 7–3–95; 8:45 am]

BILLING CODE 8010–01–M

[Release No. 34–35901; File No. CBOE–95–21]

Self-Regulatory Organizations; Order Approving Proposed Rule Change by the Chicago Board Options Exchange, Inc. Relating to Parents of Member Organizations.

June 28, 1995.

On April 18, 1995, the Chicago Board Options Exchange, Inc. (''CBOE'' or ''Exchange'') submitted to the Securities and Exchange Commission (''SEC'' or ''Commission''), pursuant to Section 19(b) of the Securities Exchange Act of 1934 (''Act''),[1] and Rule 19b–4 thereunder,[2] a proposed rule change to rescind Rule 3.7 (''Parents of Member Organizations''), which requires the Exchange's Board to approve each country under whose laws non-U.S. parents of member organizations are organized. The Exchange also proposed to move from Rule 3.7 to Rule 3.5 (''Persons Associated with Member Organizations''), subsection (a), the requirement that parents of member organizations must furnish certain information to the Exchange upon request. Notice of the proposed rule change was published for comment and appeared in the **Federal Register** on May 10, 1995.[3] No comment letters were received on the proposal. This order approves the CBOE proposal.

I. Description of the Proposal

The Exchange is proposing to rescind Rule 3.7. The first paragraph of Rule 3.7 provides that ''[a] member organization shall not be an affiliate of a parent organization unless the parent organization is organized under the laws of the United States or such other country as the Board may approve.'' (''the prohibition''). Additionally, the CBOE has proposed to move to Rule 3.5 the requirement currently contained in Rule 3.7 obligating persons who control member organizations to furnish to the Exchange, upon request, any information reasonably related to their securities business.

II. Discussion

The Commission finds that the proposed rule change is consistent with the requirements of the Act and the rules and regulations thereunder applicable to a national securities exchange, and, in particular, the requirements of Section 6(b)(2)[4] in that it eliminates restrictions on who may be associated with a member of the Exchange without diminishing the protection of investors and the public interest. Specifically, the Commission believes that the elimination of the prohibition will facilitate the Exchange's review of membership applications submitted by member organizations that have non-U.S. parents, as well as its review of transactions that would result in the transfer of control of an existing member organization to a foreign parent.

The CBOE represents that it has never adopted standards to govern the Board's approval of individual countries for purposes of Rule 3.7. Indeed, the Commission understands the difficulties which may have been encountered by the Exchange in attempting to distinguish one country from another for purposes of Board approval pursuant to Rule 3.7. Eliminating the prohibition is consistent with Section 6(b)(5) of the Act in that it removes an impediment to a free and open market and is practically significant in an era of

[1] 15 U.S.C. 78s(b)(1).

[2] 17 CFR 240.19b–4.

[3] *See* Securities Exchange Act Release No. 35666 (May 3, 1995), 60 FR 24936.

[4] 15 U.S.C. 78f(b)(2).

increased internationalization of the securities markets.

The Commission believes that the proposed rule change will not diminish the CBOE's continued and adequate regulatory jurisdiction over U.S. foreign parents of member organizations. Notably, Rule 3.4 (''Denial of and Conditions to Membership'') provides the Exchange's Membership Committee with broad discretion in granting or denying an application for membership to the Exchange. Moreover, Rule 3.5, as amended by this order, permits the Exchange to bar a person [5] from becoming or continuing to be associated with a member organization if the person does not agree to furnish the Exchange with information concerning such person's relationship with the member, and information reasonably related to such person's other securities business. Rule 3.5 also subjects persons associated with the Exchange, including parent organizations, to the Constitution and Rules of the Exchange and applicable clearing organization. Finally, the Exchange's authority over parents of member organizations is further enlarged by Rule 17.1 (''Disciplinary Jurisdiction'') which subjects persons associated with members to the disciplinary jurisdiction of the Exchange. As a result, the Commission believes that eliminating the prohibition will not hinder the Exchange's ability to adequately regulate its members and associated persons of its members.

It Therefore Is Ordered, pursuant to Section 19(b)(2) of the Act,[6] that the proposed rule change (SR–CBOE–95–21) is approved.

For the Commission, by the Division of Market Regulation, pursuant to delegated authority.[7]

Margaret H. McFarland,

Deputy Secretary.

[FR Doc. 95–16395 Filed 7–3–95; 8:45 am]

BILLING CODE 8010–01–M

[5] The Act defines ''person'' to include a company. 15 U.S.C. 78(c)(9).

[6] 15 U.S.C. 78s(b)(2).

[7] 17 CFR 200.30–3(a)(12).

SOCIAL SECURITY ADMINISTRATION

1994–95 Advisory Council on Social Security; Meeting

AGENCY: Social Security Administration.

ACTION: Notice of public meeting.

SUMMARY: In accordance with the Federal Advisory Committee Act, this notice announces a meeting of the 1994–95 Advisory Council on Social Security (the Council).

DATES: Thursday, July 27, 1995, 9:00 a.m. to 5:00 p.m. and Friday, July 28, 1995, 9:00 a.m. to 3:00 p.m.

ADDRESSES: The National Rural Electric Cooperative Association, 1800 Massachusetts Avenue NW., Washington, DC 20036, (202) 857–9500.

FOR FURTHER INFORMATION CONTACT: By mail—Dan Wartonick, 1994–95 Advisory Council on Social Security, Suite 705, 1825 Connecticut Avenue, NW., Washington, DC 20009; By telephone—(202) 482–7117; By telefax—(202) 482–7123.

SUPPLEMENTARY INFORMATION:

I. Purpose

Under section 706 of the Social Security Act (the Act), the Secretary of Health and Human Services (the Secretary) appoints the Council every 4 years. The Council examines issues affecting the Social Security Old-Age, Survivors, and Disability Insurance (OASDI) programs, as well as the Medicare program and impacts on the Medicaid program, which were created under the Act.

In addition, the Secretary has asked the Council specifically to address the following:

- Social Security financing issues, including developing recommendations for improving the long-range financial status of the OASDI programs;
- General program issues such as the relative equity and adequacy of Social Security benefits for persons at various income levels, in various family situations, and various age cohorts, taking into account such factors as the increased labor force participation of women, lower marriage rates, increased likelihood of divorce, and higher poverty rates of aged women.

In addressing these topics, the Secretary suggested that the Council may wish to analyze the relative roles of the public and private sectors in providing retirement income, how policies in both sectors affect retirement decisions and the economic status of the elderly, and how the disability insurance program provisions and the availability of health insurance and health care costs affect such matters.

The Council is composed of 12 members in addition to the chairman: Robert Ball, Joan Bok, Ann Combs, Edith Fierst, Gloria Johnson, Thomas Jones, George Kourpias, Sylvester Schieber, Gerald Shea, Marc Twinney, Fidel Vargas, and Carolyn Weaver. The chairman is Edward Gramlich.

The Council met previously on June 24–25, 1994 (59 FR 30367), July 29, (59 FR 35942), September 29–30 (59 FR 47146), October 21–22 (59 FR 51451), November 18–19 (59 FR 55272), January 27, 1995 (60 FR 3416), February 10–11 (60 FR 5433), March 8–9 (60 FR 10091), March 10–11 (60 FR 10090), April 21–22 (60 FR 18419), May 19–20 (60 FR 24961) and June 2–3 (60 FR 27372).

II. Agenda

The following topics will be presented and discussed:

- Options for ensuring the long-term financing of the Social Security program; and
- Changes to Social Security benefits to ensure relative equity and adequacy.

The meeting is open to the public to the extent that space is available. Interpreter services for persons with hearing impairments will be provided. A transcript of the meeting will be available to the public on an at-cost-of duplication basis. The transcript can be ordered from the Executive Director of the Council.

(Catalog of Federal Domestic Assistance Program Nos. 93.802, Social Security-Disability Insurance; 93.803, Social Security-Retirement Insurance; 93.805, Social Security-Survivors Insurance)

Dated: June 28, 1995.

David C. Lindeman,

Executive Director, 1994–95 Advisory Council on Social Security.

[FR Doc. 95–16412 Filed 7–3–95; 8:45 am]

BILLING CODE 4190–29–P

DEPARTMENT OF TRANSPORTATION

Federal Aviation Administration

Approval of Noise Compatibility Program, Laredo International Airport, Laredo, TX

AGENCY: Federal Aviation Administration, DOT.

ACTION: Notice.

SUMMARY: The Federal Aviation Administration (FAA) announces its findings on the noise compatibility program submitted by the city of Laredo, TX, under the provisions of Title I of the Aviation Safety and Noise Abatement Act of 1979 (Public Law 96–193) and CFR Part 150. These findings are made in recognition of the description of Federal and non-Federal responsibilities in Senate Report No. 96–52 (1980). On April 18, 1994, the FAA determined that the noise exposure maps submitted by the city of Laredo under Part 150 were in compliance with applicable requirements. On October 14, 1994, the Administrator approved the

noise compatibility program. Most of the recommendations of the program were approved.

EFFECTIVE DATES: The effective date of the FAA's approval of the Laredo International Airport noise compatibility program is October 14, 1994.

FOR FURTHER INFORMATION CONTACT: Guillermo Y. Villalobos, Department of Transportation, Federal Aviation Administration, 2601 Meacham Boulevard, Fort Worth, TX 76193–0650, (817) 222–5657. Documents reflecting this FAA action may be reviewed at this same location.

SUPPLEMENTARY INFORMATION: This notice announces that the FAA has given its overall approval to the noise compatibility program for the Laredo International Airport, effective October 19, 1994.

Under Section 104(a) of the Aviation Safety and Noise Abatement Act of 1979 (hereinafter referred to as ''the Act''), an airport operator who has previously submitted a noise exposure map may submit to the FAA a noise compatibility program which sets forth the measures taken or proposed by the airport operator for the reduction of existing noncompatible land uses within the area covered by the noise exposure maps. The Act requires such programs to be developed in consultation with interested and affected parties including local communities, government agencies, airport users, and FAA personnel.

Each airport noise compatibility program developed in accordance with Federal Aviation Regulations (FAR) Part 150 is a local program, not a Federal Program. The FAA does not substitute its judgment for that of the airport proprietor with respect to which measures should be recommended for action. The FAA's approval or disapproval of FAR Part 150 program recommendations is measured according to the standards expressed in Part 150 and the Act and is limited to the following determinations:

a. The noise compatibility program was developed in accordance with the provisions and procedures of FAR Part 150;

b. Program measures are reasonably consistent with achieving the goals of reducing existing noncompatible land uses around the airport and preventing the introduction of additional noncompatible land uses;

c. Program measures would not create an undue burden on interstate or foreign commerce, unjustly discriminate against types or classes of aeronautical uses, violate the terms of airport grant agreements, or intrude into areas preempted by the Federal Government; and

d. Program measures relating to the use of flight procedures can be implemented within the period covered by the program without derogating safety, adversely affecting the efficient use and management of the navigable airspace and air traffic control systems, or adversely affecting other powers and responsibilities of the Administrator prescribed by law.

Specific limitations with respect to FAA's approval of an airport noise compatibility program are delineated in FAR Part 150, Section 150.5. Approval is not a determination concerning the acceptability of land uses under Federal, State, or local law. Approval does not by itself constitute an FAA implementing action. A request for Federal action or approval to implement specific noise compatibility measures may be required, and an FAA decision on the request may require an environmental assessment of the proposed action. Approval does not constitute a commitment by the FAA to financially assist in the implementation of the program nor a determination that all measures covered by the program are eligible for grant-in-aid funding from the FAA. Where Federal funding is sought, requests for project grants must be submitted to the FAA Airports Division Office in Forth Worth, TX.

The city of Laredo submitted to the FAA on April 18, 1994, the noise exposure maps, descriptions, and other documentation produced during the noise compatibility planning study conducted from April 16, 1992, through April 18, 1994. The Laredo International Airport noise exposure maps were determined by FAA to be in compliance with applicable requirements on April 18, 1994. Notice of this determination was published in the **Federal Register** on April 29, 1994.

The Laredo International Airport noise compatibility study contains a proposed noise compatibility program comprised of actions designed for phased implementation by airport management and adjacent jurisdictions from the date of study completion to the year 1997.

It was requested that the FAA evaluate and approve this material as a noise compatibility program as described in Section 104(b) of the Act. The FAA began its review of the program on April 18, 1994, and was required by a provision of the Act to approve or disapprove the program within 180 days (other than the use of new flight procedures for noise control). Failure to approve or disapprove such program within the 180-day period shall be deemed to be an approval of such program.

The submitted program contained 9 proposed actions for noise mitigation on and off the airport. The FAA completed its review and determined that the procedural and substantive requirements of the Act and FAR Part 150 have been satisfied. The overall program, therefore, was approved by the Administrator effective October 14, 1994.

Outright approval was granted for 8 of the 9 specific program elements.

Operational element No. 1 was approved in part. Extension of Runway 17L 2,000 feet to the north and reconstruction of Runway 17L/35R are disapproved for purposes of Part 150. These improvements are more related to capacity than to noise.

Operational element No. 3 is approved in part for the same reason stated in the above paragraph as it relates to the extension and reconstruction of Runway 14/32.

Operational element No. 5 is disapproved pending submission of additional information.

Land use management element No. 1, (d) is approved in part pending a showing that at the time of implementation the property is within the DNL 75 contour, and, to a determination that the property is in danger of being developed incompatibly unless it is acquired by the airport operator. Portions of this undeveloped land to be acquired in connection with proposed runway improvements are disapproved for purposes of Part 150 and would be expected to be acquired as part of an airport development project rather than for noise mitigation.

These determinations are set forth in detail in a Record of Approval endorsed by the Administrator on October 14, 1994. The Record of Approval, as well as other evaluation materials and the documents comprising the submittal, are available at the FAA office listed above and at the administrative offices of the Federal Aviation Administration, Community and Environmental Needs Development, APP–600, 800 Independence Avenue SW., Washington, DC 20591.

Issued in Fort Worth, Texas, on June 27, 1995.

Otis T. Welch,

Manager, Texas Airport Development Branch.

[FR Doc. 95–16441 Filed 7–3–95; 8:45 am]

BILLING CODE 4910–13–M

Aviation Rulemaking Advisory Committee Meeting on Aircraft Certification Procedures Issues

AGENCY: Federal Aviation Administration (FAA), DOT

ACTION: Notice of meeting.

SUMMARY: The FAA is issuing this notice to advise the public of a meeting of the Federal Aviation Administration's Aviation Rulemaking Advisory Committee to discuss aircraft certification procedures issues.

DATES: The meeting will be held on July 20, 1995, at 9 a.m. Arrange for oral presentations by July 10, 1995.

ADDRESS: The meeting will be held at the General Aviation Manufacturers Association, Suite 801, 1400 K Street, NW, Washington, DC 20005.

FOR FURTHER INFORMATION CONTACT: Jeanne Trapani, Office of Rulemaking (ARM–208), 800 Independence Avenue SW., Washington, DC 20591, telephone (202) 267–7624.

SUPPLEMENTARY INFORMATION: Pursuant to section 10(a)(2) of the Federal Advisory Committee Act (Pub. L. 92–463; 5 U.S.C. App. II), notice is hereby given of a meeting of the Aviation Rulemaking advisory committee to be held on July 20, 1995, at the General Aviation Manufacturers Association, Suite 801, 1400 K Street, NW, Washington, DC 20005. The agenda for the meeting will include:

- Opening Remarks
- Working Group Reports
  Delegation System
  ELT
  Parts
  Production Certification
  ICPTF
- New Business

Attendance is open to the interested public, but will be limited to the space available. The public must make arrangements by July 10, 1995, to present oral statements at the meeting. The public may present written statements to the committee at any time by providing 25 copies to the Assistant Executive Director for Aircraft Certification Procedures or by bringing the copies to him at the meeting. Arrangements may be made by contacting the person listed under the heading **FOR FURTHER INFORMATION CONTACT**.

Sign and oral interpretation can be made available at the meeting, as well as an assistive listening device, if requested 10 calendar days before the meeting.

Issued in Washington, DC, on June 28, 1995.

Daniel P. Salvano,

Assistant Executive Director, ARAC on Aircraft Certification Procedures.

[FR Doc. 95–16443 Filed 7–3–95; 8:45 am]

BILLING CODE 4910–13–M

Notice of Intent to Rule on Application to Impose and Use From a Passenger Facility Charge (PFC) at the Gulfport-Biloxi Regional Airport, Gulfport, MS

AGENCY: Federal Aviation Administration (FAA), DOT.

ACTION: Notice of intent to rule on application.

SUMMARY: The FAA proposes to rule and invites public comment on the application to impose and use the revenue from a PFC at the Gulfport-Biloxi Regional Airport under the provisions of the Aviation Safety and Capacity Expansion Act of 1990 (Title IX of the Omnibus Budget Reconciliation Act of 1990) (Pub. L. 101–508) and part 158 of the Federal Aviation Regulations (14 CFR part 158).

DATES: Comments must be received on or before August 4, 1995.

ADDRESSES: Comments on this application may be mailed or delivered in triplicate to the FAA at the following address: FAA/Airports District Office, 120 North Hangar Drive, Suite B, Jackson, Mississippi 39208–2306.

In addition, one copy of any comments submitted to the FAA must be mailed or delivered to Mr. Bruce A. Frallic, A.A.E., Executive Director of the Gulfport-Biloxi Regional Airport, at the following address: 14035–L Airport Road, Post Office Box 2127, Gulfport, MS 39505.

Air carriers and foreign air carriers may submit copies of written comments previously provided to the Gulfport-Biloxi Regional Airport under § 158.23 of part 158.

FOR FURTHER INFORMATION CONTACT: Elton E. Jay, Principal Engineer, FAA Airports District Office, 120 North Hangar Drive, Suite B, Jackson, Mississippi 39208–2306, telephone number 601–965–4628. The application may be reviewed in person at this same location.

SUPPLEMENTARY INFORMATION: The FAA proposes to rule and invites public comment on the application to impose and use the revenue from a PFC at the Gulfport-Biloxi Regional Airport under the provisions of the Aviation Safety and Capacity Expansion Act of 1990 (Title IX of the Omnibus Budget Reconciliation Act of 1990) (Pub. L. 101–508) and part 158 of the Federal Aviation Regulations (14 CFR part 158).

On June 27, 1995, the FAA determined that the application to impose and use the revenue from a PFC submitted by the Gulfport-Biloxi Regional Airport Authority was substantially complete within the requirements of § 158.25 of part 158. The FAA will approve or disapprove the application, in whole or in part, no later than October 25, 1995.

The following is a brief overview of the application.

Level of the proposed PFC: $3.00
Proposed charge effective date: January 1, 1996
Proposed charge expiration date: January 1, 1998
Total estimated PFC revenue: $1,518,400
Brief description of proposed project(s): Construct concourse ''A'', construct terminal improvements (phase I), master plan update-wetlands, master plan update-road access, and construct charter ramp (phase V-a).
Class or classes of air carriers which the public agency has requested not be required to collect PFCs: None

Any person may inspect the application in person at the FAA office listed above under **FOR FURTHER INFORMATION CONTACT.** In addition, any person may, upon request, inspect the application, notice and other documents germane to the application in person at the office of the Gulfport-Biloxi Regional Airport Authority.

Issued in Jackson, Mississippi, on June 28, 1995.

Wayne Atkinson,

Manager, Airports District Office, Southern Region, Jackson, Mississippi.

[FR Doc. 95–16440 Filed 7–3–95; 8:45 am]

BILLING CODE 4910–13–M

Notice of Intent to Rule on Application to Use the Revenue From a Passenger Facility Charge (PFC) at Metropolitan Oakland International Airport, Oakland, CA

AGENCY: Federal Aviation Administration (FAA), DOT.

ACTION: Notice of intent to rule on application.

SUMMARY: The FAA proposes to rule and invites public comment on the application to use the revenue from a PFC at Metropolitan Oakland International Airport under the provisions of the Aviation Safety and Capacity Expansion Act of 1990 (Title IX of the Omnibus Budget Reconciliation Act of 1990) (Pub. L.

101–508) and part 158 of the Federal Aviation Regulations (14 CFR part 158).

DATES: Comments must be received on or before August 4, 1995.

ADDRESSES: Comments on this application may be mailed or delivered in triplicate to the FAA at the following address: Federal Aviation Administration, Airports Division, 15000 Aviation Blvd., Lawndale, CA 90261, or San Francisco Airports District Office, 831 Mitten Road, Room 210, Burlingame, CA 94010–1303. In addition, one copy of any comments submitted to the FAA must be mailed or delivered to Mr. Charles Foster, Executive Director of the Port of Oakland, at the following address: Post Office Box 2064, Oakland, California 94604–2064. Air carriers and foreign air carriers may submit copies of written comments previously provided to the Port of Oakland under § 158.23 of part 158.

FOR FURTHER INFORMATION CONTACT: Mr. Joseph R. Rodriguez, Supervisor, Planning and Programming Section, Airports District Office, 831 Mitten Road, Room 210, Burlingame, CA 94010–1303, Telephone: (415) 876–2805. The application may be reviewed in person at this same location.

SUPPLEMENTARY INFORMATION: The FAA proposes to rule and invites public comment on the application to use the revenue from Metropolitan Oakland International Airport under the provisions of the Aviation Safety and Capacity Expansion Act of 1990 (Title IX of the Omnibus Budget Reconciliation Act of 1990) (Pub. L. 101–508) and part 158 of the Federal Aviation Regulations (14 CFR part 158).

On June 23, 1995, the FAA determined that the application to use the revenue from a PFC submitted by the Port of Oakland was substantially complete within the requirements of § 158.25 of part 158. The FAA will approve or disapprove the application, in whole or in part, no later than September 22, 1995.

The following is a brief overview of the use application.

Level of proposed PFC: $3.00
Charge effective date: April 1, 1995
Estimated charge expiration date: August 1, 1996
Brief description of the use project: Construct Airport Rescue and Fire Fighting Facility
Total estimated net PFC revenue to be used on this use project: $8,671,000
Class or classes of air carriers which the public agency has requested not be required to collect PCFs: Air taxi/Commercial Operators (ATCO) filing FAA Form 1800–31.

This project was previously approved as impose only project contained within an overall PFC package which was approved on December 23, 1994. Any person may inspect the application in person at the FAA office listed above under **FOR FURTHER INFORMATION CONTACT** and at the FAA Regional Airports Division located at: Federal Aviation Administration, Airports Division, 15000 Aviation Blvd., Lawndale, CA 90261. In addition, any person may, upon request, inspect the application, notice and other documents germane to the application in person at the Port of Oakland.

Issued in Hawthorne, California, on June 23, 1995.

Herman C. Bliss,

Manager, Airports Division, Western Pacific Region.

[FR Doc. 95–16439 Filed 7–3–95; 8:45 am]

BILLING CODE 4910–13–M

National Highway Traffic Safety Administration

Limited Competitive Cooperative Agreement to Support National Passenger Protection Program

AGENCY: National Highway Traffic Safety Administration (NHTSA), DOT.

ACTION: Notice of limited competitive cooperative agreement to support the National Child Passenger Safety Program.

SUMMARY: The National Highway Traffic Safety Administration (NHTSA) announces the availability of a FY 1995 limited competitive cooperative agreement to support the national child passenger protection program in the area of program development. This notice solicits applications from national, non-profit professional organizations which have some background in child transportation issues. The organization must be interested in refining and implementing marketing and campaign strategies which have been researched and developed under a previous NHTSA contract, designed to increase child safety seat use by rural populations. The purpose and result of this agreement will be to increase child passenger safety restraint usage rates in selected rural areas. This agreement is scheduled to last for eighteen (18) months.

DATES: Applications must be received at the office designated below on or before August 18, 1995.

ADDRESSES: Applications must be submitted to the National Highway Traffic Safety Administration, Office of Contracts and Procurement (NAD–30), ATTN: Earnestine Mitchell, 400 Seventh Street SW., Room 5301, Washington, DC 20590. All applications submitted must include a reference to NHTSA Limited Competitive Cooperative Agreement Program No. DTNH22–95–H–05202. Interested applicants are advised that no separate applications package exists beyond the contents of this announcement.

FOR FURTHER INFORMATION CONTACT: General administrative questions may be directed to Earnestine Mitchell, Office of Contracts and Procurement, at (202) 366–9565. Programmatic questions relating to this cooperative agreement should be directed to Ms. JoAnn Murianka, Highway Safety Specialist, Room 5118 (NTS–11), 400 Seventh Street SW., Washington, DC 20590, at (202) 366–5198.

SUPPLEMENTARY INFORMATION:

Background

NHTSA estimates that child safety seats, when used correctly, can reduce fatalities among children less than five years of age by 71 percent. This makes child safety seats one of the single most effective automobile safety innovations ever developed. As a result of improvements in the design of these seats, state child passenger protection laws and the enforcement of such laws, and public education, the use of child restraints has increased dramatically over the past decade.

However, child safety seats are currently saving only about half of the lives that they could potentially save. Many children are still travelling unrestrained, and many who are using child safety seats are using them incorrectly. Recent surveys indicate that at least one in four safety seats is being grossly misused, substantially reducing its effectiveness, and as many as three out of four seats are being misused to some extent.

Added to this gross misuse, the rural areas lag woefully behind in the national average in the use of child safety restraints. An analyses conducted on NHTSA's Fatal Accident Reporting System (FARS) data correlated with geodemographic data shows that rural areas continue to be over-represented in child motor vehicle crash related fatalities. The rural areas in southern California and the southern states lead the nation in non-use of child safety restraints.

Parents receive information and guidance concerning child passenger protection from many sources. One of the most effective sources for this communication is through the health care community and especially through

local medical and public health care professionals. Medical professionals have unique credibility and influence with parents of young children. The child passenger protection message benefits from being delivered in the context of a health care activity. To many parents, medical professionals are viewed as the ultimate authority in child health care. In rural areas, the health care professionals are highly respected as community advocates for the health and well-being of children. This status enables medical professionals to increase the awareness of child safety issues within the community. This influence can be of great benefit to existing community efforts which promote child passenger protection.

In the agreement, NHTSA wishes to expand upon the research previously conducted. In a previous contract, NHTSA developed preliminary profiles of individuals who will be the focus of this marketing campaign. The populations targeted were young mothers in their teens or 20's who had children under the age of 4, living in targeted lower economic, rural areas of Jefferson County, Georgia and Fentress County, Tennessee.

Objectives

The objectives of this agreement are:

1. To refine marketing and campaign strategies developed and focus tested by NHTSA to specifically target young, rural, low-income mothers such as those previously surveyed by NHTSA.
2. To implement the refined campaign strategies in the selected rural population group.
3. To evaluate the effects of implementing these refined marketing and educational campaign strategies on the usage rate of child passenger safety restraints in the targeted rural populations.
4. To increase the use of child passenger restraints by the target rural populations.
4. To increase the use of child passenger restraints by the target rural populations.
5. To develop campaign strategies and materials which can be used nationally to increase correct child passenger restraint use by rural populations.

Specific Tasks

1. The contractor shall meet with the COTR within one week after the award of the contract to review details of the contractor's proposed work plan and schedules for this project.
2. The contractor shall review the marketing and educational campaign strategies which have been developed thus far using information gained from the previously surveyed target groups, with a view towards incorporating these strategies into the campaign implementation.
3. The contractor must provide information on how child safety seats will be made available to the target population.
4. The contractor shall research all existing strategies that are currently used in and around the target group area to ascertain their effectiveness.
5. The contractor shall develop marketing and educational campaign strategies and materials based on the study previously conducted by NHTSA, current research, and any other method proposed by the contractor and approved by the COTR.
6. The contractor or affiliates shall pilot test the strategies in the rural populations identified by NHTSA. These target rural populations shall be geographically located within the states of California, Georgia, Tennessee or Kentucky. A detailed description of the method(s) interaction with the public will be required by the COTR before the pilot testing commences. Earlier research has shown that young mothers in the selected rural areas interact on a regular basis with community health institutions. Therefore, health care sponsored events like Health Fairs, etc., may prove invaluable for dissemination of information. Contingent with the submission of the test plan, the contractor shall present the COTR a detailed method of evaluating the effectiveness of the strategies.
7. The contractor shall identify necessary child passenger safety technical training needed and explain how this necessary training will be attained.
8. The contractor shall coordinate efforts with local state highway safety offices and include a letter of support from the local highway safety office.
9. It is imperative that the contractor make provisions in his organization to continue the implementation of the strategies developed after the termination of this cooperative agreement within each of the target areas for at least 3 years. Emphasis should be placed on making this an on-going program that is self-sufficient, possibly institutionalizing this program into existing activities. NHTSA will be prepared to offer suggestions that may assist the contractor to achieve this goal. A plan of action for self-sustenance shall be provided to NHTSA along with the final report.
10. Quarterly progress reports will be provided. The contractor shall, upon completion of this project, present to NHTSA a detailed report of the entire project.

Deliverables

A final list of required deliverables will be developed in accordance with the accepted proposal prior to award. For planning purposes, the agency anticipates that the required deliverables will include the following:

Work Plan and Schedules.	1 Week, 3 Weeks and 4 Weeks after award.
Progress Reports	Quarterly.
Final Report (Draft) .	1 Year after award.
Plan for Self-sustenance Final Report.	2 Months after project completion.

NHTSA Role in Activities

The NHTSA Office of Occupant Protection (OOP) will be involved in all activities undertaken as part of this cooperative agreement program and will:

1. Provide a project officer to participate in the planning and management of the cooperative agreement and to coordinate activities between the organization and OOP;
2. Make available information and technical assistance from government sources, including a copy of the previously conducted NHTSA study. Additional assistance shall be within resources available; and,
3. Provide liaison with other government and private agencies as appropriate.

Evaluation Criteria and Review Process

Proposals must demonstrate that the applicant meets all eligibility requirements listed above. Proposals will be evaluated based upon bid price and upon the following factors which are not necessarily listed in order of importance:

1. What the organization proposes to accomplish and the potential of the proposed project to make a significant contribution to national efforts to increase the correct use of child safety restraints in rural areas.
2. The extent to which the project addresses foreseeable barriers to gaining widespread adoption of child passenger safety activities by the selected rural population.
3. The overall experience, capability and commitment of the organization to facilitate involvement of its membership in the promotion of child passenger protection in rural areas.
4. The soundness and feasibility of the proposed approach or work plan, including the evaluation to assess program outcomes.
5. How the organization will provide the administrative capability and staff expertise necessary to complete the proposed project.

6. The proposed coordination with and use of other available resources, including collaboration with state highway safety offices and other existing or planned state and community child occupant protection programs.

7. How the organization plans to continue child passenger safety educational activities.

Upon receipt of applications by the agency, they will be screened to assure that all eligibility requirements have been met. Applications will be reviewed by NHTSA staff using the criteria outlined above. The results of this review will be recommendations to the agency management for Cooperative Agreement Award.

Support, Terms, and Conditions

Contingent on the availability of funds, satisfactory performance, and continued demonstrated need, this cooperative agreement may be awarded for a project period of up to eighteen months. The application for the funding period (18 months) should address what is proposed and can be satisfactorily accomplished during that period.

The anticipated funding level for this cooperative agreement in FY 95 is $85,000. Federal funds should be viewed as seed money to assist organizations in the development of traffic safety initiatives. Monies allocated in this cooperative agreement are not intended to cover all of the costs that will be incurred in completing this project. Applicants should demonstrate a commitment of financial and in-kind resources to the support of this project.

The organization participating in this cooperative agreement program may use awarded funds to support salaries of individuals assigned to the project, the development or purchase of direct program materials, direct program-related activities, or for travel related to the cooperative agreement.

The award recipient will be required to submit quarterly progress reports on a schedule to be determined after award. In addition, the recipient will be required to submit a detailed final summary report describing the project and its outcomes no later than two (2) months after termination of this agreement.

Eligibility Requirements

In order to be eligible to participate in this cooperative agreement, an organization must meet the following requirements:

1. Be a private, national non-profit organization;

2. Have an established membership structure with state/local chapters or affiliates in a broad geographic region of the country;

3. Have a membership consisting of, or works in collaboration with health care officials;

4. Have staff knowledgeable of correct child safety use;

5. Have in place a schedule of annual regional/state conferences or conventions and a variety of communication mechanisms that are appropriate for motivating members and other constituents to become involved in the promotion of child occupant protection at state and local levels;

6. Demonstrate an understanding of the current and potential role affiliates can play in child occupant protection efforts at the state and local levels; and,

7. Demonstrate top level support within the organization for the project and, where appropriate, demonstrate similar support from the membership or local affiliates; and

8. Coordinate efforts with the State Highway Safety Office.

Application Procedures

1. All applications must be covered by a signed copy of OMB Standard Form 424 (revised 4/88, including 424A and 424B) ''Application for Federal Assistance'' with the required information filled in and the certified assurances included. This form is available from the NHTSA Office of Contracts and Procurement (NAD–30), 400 Seventh Street, S.W., Washington, DC 20590, (202) 366–0607. Form 424-A deals with budget information, and Section B identifies Budget Categories, the available space does not permit for a level of detail which is sufficient to provide for a useful evaluation of the proposed costs. A supplemental sheet should be provided which presents a detailed breakdown of the proposed costs.

2. Applications shall include a program narrative statement which addresses the following:

A. Goals and Objectives

(i) Demonstrates the need for the assistance and states the principle and subordinate objectives of the project. Supporting documentation from concerned interests other than the applicant can be used. Any relevant data based on planning studies should be included or footnoted.

(ii) Identifies the results and benefits to be derived.

B. Approach

(i) Outlines a plan of action pertaining to the scope and detail on how the proposed work will be accomplished. Include the reasons for taking this approach as opposed to other approaches.

(ii) Describes any unusual features, such as design or technological innovations and extraordinary social/community involvement.

(iii) Provides quantitative projections of the accomplishments to be achieved, if possible, or lists the activities in chronological order to show the schedule of accomplishments and their target dates.

(iv) Identifies the kinds of data to be collected and maintained, and discusses the criteria to be used to evaluate the results. Explains the methodology that will be used to determine if the needs identified and discussed are being met and if the results and benefits identified are being achieved.

(v) Lists each organization, corporation, consultant, or other individual who will work on the project along with a short description of the nature of their effort or contribution and relevant experience.

3. Applications must be typed on one side of the page only. The original and two copies of each application must be submitted. An applicant may submit an additional four copies to facilitate the review process, but there is no requirement or obligation to do so.

Terms and Conditions of the Award

Prior to award, each recipient must comply with the certification requirements of 49 CFR part 29—Department of Transportation. During the effective period of the cooperative agreement awarded as a result of this notice, the agreements shall be submitted to general administrative requirements of OMB Circular A–110 (or the ''common rule'', if effected prior to the award), the cost principles of OMB Circular A–21 or A–22, as applicable to the recipient, and the provisions of 49 CFR part 29, Governmentwide Debarment and Suspension (nonprocurement).

Issued on June 29, 1995.

James H. Hedlund,

Acting Associate Administrator, Traffic Safety Programs.

[FR Doc. 95–16396 Filed 7–3–95; 8:45 am]

BILLING CODE 4910–59–M

[Docket No. 95–21, Notice No. 02]

Notice of Availability of the Crash Outcome Data Evaluation System (Codes) Technical Report, Background Material for the Draft Report to Congress on the Benefits of Safety Belts and Motorcycle Helmets

AGENCY: National Highway Traffic Safety Administration (NHTSA), Department of Transportation.

ACTION: Notice of availability of Technical Report which provides background material for the Report to Congress on The Benefits of Safety Belts and Motorcycle Helmets, produced by the Crash Outcome Data Evaluation System (CODES) project.

SUMMARY: This notice announces the availability of the Technical Report for the Crash Outcome Data Evaluation System (CODES) project. This report provides detailed background material for the Report to Congress on the Benefits of Safety Belts and Motorcycle Helmets, based on data and analyses from the CODES project. The Report to Congress, which was mandated by Section 1031(b) of the Intermodal Surface Transportation Efficiency Act of 1991 (ISTEA), was made available for a 90-day public comment period through a notice published in the **Federal Register** on May 3.

DATES: Comments on the draft Report to Congress are due no later than August 1, 1995.

ADDRESSES: Interested persons may obtain a copy of the draft report or the CODES Technical Report, free of charge, from NHTSA's Docket Section at the following address: Docket Section, Room 5109, NASSIF Building, 400 Seventh Street, SW., Washington, DC 20590. Telephone: 202–366–4949. Docket hours are 9:30 a.m. to 4:00 p.m., Monday through Friday.

FOR FURTHER INFORMATION CONTACT: Mr. Dennis Utter, National Center for Statistics and Analysis NRD–31, National Highway Traffic Safety Administration, 400 Seventh Street SW, Washington, DC 20590: Telephone 202–366–5351.

SUPPLEMENTARY INFORMATION: The Report to Congress on the Benefits of Safety Belts and Motorcycle Helmets was mandated by Section 1031(b) of the Intermodal Surface Transportation Efficiency Act of 1991 (ISTEA). Grants were awarded to entities in Hawaii, Maine, Missouri, New York, Pennsylvania, Utah, and Wisconsin to obtain the data and perform analyses upon which the report was based. NHTSA entitled the project the Crash Outcome Data Evaluation System (CODES) Project. These CODES grantee states linked statewide motor vehicle crash report data and computerized emergency medical service, emergency department, hospital discharge, and rehabilitative/long-term care data. The linked data were analyzed to determine the medical and financial outcome benefits of the protective devices in crashes. The grantees provided NHTSA with the results of these analyses. NHTSA summarized the results of the individual state studies to produce the draft Report to Congress.

Whereas the draft Report to Congress provides an overview of the study, the databases used, the methodology used to link and analyze the data, and composite results, the CODES Technical Report provides results by state and details on the procedures used by the grantees to prepare the databases, the probabilistic methods used to link them, and the statistical analyses which were performed. Also provided is additional information about the CODES Advisory Committees and state-specific applications for the linked data

William A. Boehly,

Associate Administrator for Research and Development, National Highway Traffic Safety Administration.

[FR Doc. 95–16436 Filed 7–3–95; 8:45 am]

BILLING CODE 4910–59–M

DEPARTMENT OF THE TREASURY

Customs Service

Procedures if the Generalized System of Preferences Program Expires

AGENCY: Customs Service, Treasury.

ACTION: General notice.

SUMMARY: The Generalized System of Preferences (GSP) is a preferential trade program that allows the products of many developing countries to enter the United States duty free. The GSP is currently scheduled to expire at midnight on July 31, 1995, unless its provisions are extended by Congress. This document provides notice to importers that claims for duty-free treatment under the GSP may not be made for merchandise entered or withdrawn from a warehouse on or after August 1, 1995, if the program is not extended before that date. The document also sets forth mechanisms to facilitate refunds, if the GSP is renewed retroactively.

DATES: The plan set forth in this document will become effective as of August 1, 1995, if Congress does not extend the GSP program before that date.

FOR FURTHER INFORMATION CONTACT: For specific questions relating to the Automated Commercial Systems: Irv Fisher, Office of Automated Commercial System, 202–927–1220. For general operations questions:

Formal entries.....Lisa Crosby, 202–927–0163
Informal entries....Debi Rutter, 202–927–1847
Mail entries .....Dan Norman, 202–927–0542
Passenger claims.....Robert Jacksta, 202–927–1311

SUPPLEMENTARY INFORMATION:

Background

Section 501 of the Trade Act of 1974 (the Act), as amended (19 U.S.C. 2461) authorizes the President to establish a Generalized System of Preferences (GSP) to provide duty-free treatment for eligible articles imported from designated beneficiary countries. Beneficiary developing countries and articles eligible for duty-free treatment under the GSP are designated by the President by Presidential Proclamation in accordance with sections 502(a) and 503(a) of the Act (19 U.S.C. 2462(a) and 2463(a)). Pursuant to 19 U.S.C. 2465(a), as amended by section 601 of the Uruguay Round Agreements Act, 19 U.S.C. 2465 note, Pub.L. 103–465, 108 Stat. 4990 (1994), duty-free treatment under the GSP is presently scheduled to expire on July 31, 1995.

Congress is currently considering whether to extend the GSP program. If legislation is enacted but does not become law before the GSP expires, language may be included that would renew the GSP retroactively to the date of its presently scheduled expiration and Customs will need to reliquidate numerous entries to make refunds of duties collected. However, if Congress does not pass legislation renewing the GSP before midnight, July 31, 1995, no claims for duty-free treatment under the program may be allowed on entries made after that time.

Recognizing the impact that retroactive renewal and consequent numerous reliquidations would have on both importers and Customs, Customs has developed a mechanism to facilitate refunds, should GSP be renewed retroactively. Set forth below is Customs plan that will be implemented on August 1, 1995, if the GSP has not been extended by that date.

Formal Entries

Claims—Duties Must be Deposited

No claims for duty-free treatment under the GSP may be made for merchandise entered, or withdrawn from warehouse for consumption on or after August 1, 1995. Duties at the most-favored-nation rate must be deposited, or a claim may be made under another preferential program for which the merchandise qualifies (for example, the Andean Trade Preference Act, the Caribbean Basin Initiative, or the U.S.-Israel Free Trade Area Agreement).

While estimated duties must be deposited, all filers who file entry summaries through the Automated Broker Interface (ABI) may continue to file using the Special Program Indicator (SPI) for the GSP (the letter ''A'') as a prefix to the tariff number for all entries that would have qualified for the GSP if the GSP were still in effect. Customs Automated Commercial System (ACS) will be reprogrammed to accept the SPI ''A'' with the payment of duty.

Filers using the ABI may reprogram their software so that the SPI ''A'' can still be used as a prefix to the tariff number, but with the payment of duty. While reprogramming is strictly voluntary, continued use of the SPI ''A'' has some benefits. One benefit of continued use of the SPI ''A'' is that the filer will not have to write a letter to Customs requesting a refund if the GSP is renewed with retroactive effect. Use of the SPI ''A'' will enable Customs to identify affected line items and refund duties without a written request from the importer. In other words, after July 31, 1995, the SPI ''A'' will constitute an importer's request for a refund of duties paid for GSP line items, should GSP renewal be retroactive. Other benefits are that ACS will perform its usual edits on the information transmitted by the filer, thereby ensuring that GSP claims are for acceptable country/tariff combinations and eliminating the need for numerous statistical corrections.

This plan was used when the GSP expired on September 30, 1994, and was later renewed with retroactive effect by section 601 of the Uruguay Round Agreements Act, Pub.L. 103–465, 108 Stat. 4990 (1994). Customs Headquarters developed a computer program that identified entries made using the SPI ''A'' while the program was lapsed and was able to process most refunds without requiring further action by the importer. Refunds were delayed somewhat while the program was being written and de-bugged. Customs intends to use the same program this year if the GSP is renewed with retroactive effect and believes it is the most efficient way to process large numbers of refunds quickly.

Filers who do not wish to reprogram will be required to request refunds in writing if the GSP is renewed retroactively, identifying the affected entry numbers.

ABI filers continuing to use the SPI ''A'' may use it as they do now (for example, for warehouse entries and for formal consumption entries).

Importers may not use the SPI ''A'' if they intend to later claim drawback. Use of the SPI ''A'' is the importer's indication that he wishes to receive a refund if the GSP is renewed retroactively. To claim both this refund and drawback would be to request a refund in excess of duties actually deposited. Importers who are unsure as to whether they will claim drawback are advised not to use the SPI ''A''. If the GSP is renewed retroactively, and they have not yet claimed drawback, they may request a refund by writing to the district director at the port of entry. If the GSP is not renewed retroactively, they will still have the option of filing a drawback entry.

Continued use of the SPI ''A'' is not available to non-ABI filers.

Statistics

For statistical purposes, ACS will internally convert any ''A'' transmitted via ABI after July 31, 1995 into a ''Q''. If the GSP is renewed retroactively to that date, Census will convert all ''Q'' statistics into ''A'' statistics, thereby ensuring that next year's competitive need limitations under the GSP are accurate. This will also vastly reduce the number of statistical corrections that must be done by import specialists.

Refunds

If the GSP is renewed with retroactive effect, Customs will reliquidate all affected ABI entry summaries with a refund for the GSP line items. Field locations shall not issue GSP refunds except as instructed to do so by Customs Headquarters.

If a filer files an ABI entry summary with the SPI ''A'', no further action will need to be taken by the filer to request a refund; filing with the SPI ''A'' constitutes a valid claim for a refund. Refunds for summaries filed without the SPI ''A'' must be requested in writing. Instructions on how to request a refund in writing will be issued if the GSP is renewed with retroactive effect.

Informal Entries

Refunds on informal entries filed via ABI on a Customs Form 7501 with the SPI ''A'' will be processed in accordance with the procedures outlined above.

Baggage Declarations and Non-ABI Informals

When merchandise is presented for clearance, travellers and importers will be advised verbally or with a written notice that they may be eligible for a refund of GSP duties.

Travellers/importers may write a statement directly on their Customs declarations (CF 6059B) or informal entries (CF 363 or CF 7501) indicating their desire for a refund. If GSP duty-free status is reenacted with a retroactive provision, no further action to obtain a refund will be required on the part of the importer who has written such a statement. Failure to request a refund in this manner does not preclude them from making a timely request in the future.

Mail Entries

A written notice will be sent to the addressees with the CF 3419A (Mail Entry) informing them that they may be eligible for a refund of GSP duties.

The addressees may submit a claim requesting a refund of GSP duties and return it, along with a copy of the CF 3419A to the appropriate International Mail Branch (address listed on bottom right hand corner of CF 3419A). It is essential that a copy of the CF 3419A be included as this will be the only method of identifying GSP products and ensuring that duties and fees have been paid.

Dated: June 28, 1995.

Philip Metzger,

Acting Assistant Commissioner, Field Operations.

[FR Doc. 95–16331 Filed 7–3–95; 8:45 am]

BILLING CODE 4820–02–P

DEPARTMENT OF THE TREASURY

Customs Service

Performance Review Board—Appointment of Members

AGENCY: U.S. Customs Service, Department of Treasury.

ACTION: General notice.

SUMMARY: This Notice announces the appointment of the members of the United States Customs Service Performance Review Boards (PRB's) in accordance with 5 U.S.C. 4313(c)(4). The purpose of the PRB's is to review senior executives' performance appraisals and make recommendations regarding performance appraisals and performance awards.

EFFECTIVE DATES: July 1, 1995.

FOR FURTHER INFORMATION CONTACT: Bob Smith, Director, Office of Personnel, Office of Human Resources, United States Customs Service, Post Office Box 636, Washington, DC 20044; telephone (202) 634–5270.

Background

There are two (2) PRB's in the U.S. Customs Service. Performance Review Board 1.

The purpose of this Board is to review the performance appraisals of senior executives rated by the Commissioner or Deputy Commissioner of Customs. The members are:

W. Ralph Basham, Assistant Director, Office of Administration, U.S. Secret Service

Daniel R. Black, Associate Director, Office of Compliance Operations, Bureau of Alcohol, Tobacco & Firearms

John C. Dooher, Director, Washington Center, Federal Law Enforcement Training Center General Office

William H. Gillers, Director, Office of Management Advisor Services, Department of the Treasury
John W. Mangels, Associate Director, Office of Management/CFO, Financial Crimes Enforcement Network

Performance Review Board 2.

The purpose of this Board is to review the performance appraisals of all senior executives *except* those rated by the Commissioner or Deputy Commissioner of Customs. All are Assistant Commissioners or Regional Commissioners of the U.S. Customs Service. The members are:

Assistant Commissioners
Samuel H. Banks, Office of Field Operations
Walter B. Biondi, Office of Investigations
Douglas M. Browning, Office of International Affairs
Edward F. Kwas, Office of Strategic Trade
William F. Riley, Office of Information and Technical Services
Deborah J. Spero, Human Resources Management
Homer J. Williams, Office of Internal Affairs
Vincette Goerl, Office of Finance
Stuart P. Seidel, Office of Regulations and Rulings
Regional Commissioners
Philip W. Spayd, Northeast Region
Anthony N. Liberta, New York Region
Garnet J. Fee, North Central Region
J. Robert Grimes, South Central Region
Robert S. Trotter, Southwest Region
Robert McNamara, Southeast Region
Rudy Camacho, Pacific Region.

Dated: June 28, 1995.

Michael H. Lane,

Acting Commissioner of Customs.

[FR Doc. 95–16332 Filed 7–3–95; 8:45 am]

BILLING CODE 4820–02–M

Office of Thrift Supervision

Public Information Collection Requirements Submitted to OMB for Review

June 27, 1995.

The Office of Thrift Supervision (OTS) has submitted the following public information collection requirement(s) to OMB for review and clearance under the Paperwork Reduction Act of 1980, Public Law 96–11. Copies of the submission(s) may be obtained by calling the OTS Clearance Officer listed. Comments regarding this information collection should be addressed to the OMB reviewer listed and to the OTS Clearance Officer, Office of Thrift Supervision, 1700 G Street, N. W., Washington, D.C. 20552.

OMB Number: New

Form Number: OTS Form 1602

Type of Review: New Collection

Title: Customer Service Survey for Interpretive Opinions

Description:. This information collection is to obtain feedback on the quality of opinions produced by the Office of Thrift Supervision in order to meet the goals of the National Performance Review with respect to improving customer service.

Respondents: Savings and Loan Associations, Savings Banks, Attorneys

Estimated Number of Respondents: 50

Estimated Burden Hours Per Respondent: .25 Hrs. Avg

Frequency of Response: Once

Estimated Total Reporting Burden: 12.50 Hrs.

Clearance Officer: Colleen M. Devine, (202) 906–6025, Office of Thrift Supervision, 1700 G Street, N. W., Washington, D.C. 20552.

OMB Reviewer: Milo Sunderhauf, (202) 395–7340, Office of Management and Budget, Room 10226, New Executive Office Building, Washington, D.C. 20503.

Cora Prifold Beebe,

Director of Administration.

[FR Doc. 95–16362 Filed 7–3–95; 8:45 am]

BILLING CODE 6720–01–P

Fiscal Service

Renegotiation Board Interest Rate Prompt Payment Interest Rate Contracts Disputes Act

Although the Renegotiation Board is no longer in existence, other Federal Agencies are required to use interest rates computed under the criteria established by the Renegotiation Act of 1971 (P.L. 92–41). For example, the Contracts Disputes Act of 1978 (P.L. 95–563) and the Prompt Payment Act (P.L. 97–177) are required to calculate interest due on claims at a rate established by the Secretary of the Treasury pursuant to Public Law 92–41 (85 Stat. 97) for the Renegotiation Board (31 U.S.C. 3902).

Therefore, notice is hereby given that, pursuant to the above mentioned sections, the Secretary of the Treasury has determined that the rate of interest applicable for the purpose of said sections, for the period beginning July 1, 1995 and ending on December 31, 1995, is 6⅜ per centum per annum.

Dated: June 27, 1995.

Gerald Murphy,

Fiscal Assistant Secretary.

[FR Doc. 95–16407 Filed 7–3–95; 8:45 am]

BILLING CODE 4810–35–M

Customs Service

Notice to Test the Use of Reconciliation for Adjustments Made to the Price of Imported Merchandise by Related Party Companies Under 26 U.S.C. 482

AGENCY: U.S. Customs Service, Department of the Treasury.

ACTION: General Notice.

SUMMARY: This notice announces Customs plan to conduct a test regarding the use of reconciliation for those related party importers which have reason to believe upward adjustments may be made to the price of imported merchandise for tax purposes pursuant to 26 U.S.C. 482. This notice invites public comments concerning any aspect of the planned test, informs interested members of the public of the eligibility requirements for voluntary participation in the testing of reconciliation, for this purpose, and describes the basis on which Customs will select participants.

DATES: The test will commence no earlier than October 1, 1995, and will run until December 31, 1996. Comments concerning the methodology of the reconciliation prototype must be received on or before (insert date 30 days from publication in the **Federal Register**). To participate in this reconciliation test, the application must be filed and approved by Customs on or before October 1, 1995.

ADDRESSES: Written comments regarding this notice, and information submitted to be considered for voluntary participation in this test should be addressed to Mr. William F. Inch, Director, Office of Regulatory Audit, Office of Strategic Trade, U.S. Customs Service, 1301 Constitution Avenue NW., Room 2311, Washington, D.C. 20229–0001.

FOR FURTHER INFORMATION CONTACT: Matthew Krimski 202–927–0411.

SUPPLEMENTARY INFORMATION:

Background

Section 1059A of the Internal Revenue Code

Section 1059A of the Internal Revenue Code provides that in related party transactions the amount of any costs—

(1) which are taken into account in computing the basis or inventory cost of such property by the purchaser, and

(2) which are also taken into account in computing the customs value of such property shall not, for purposes of computing such basis or inventory cost for purposes of this chapter, be greater than the amount of such costs taken into account in computing such customs value.

The legislative history of section 1059A indicates that Congress intended to preclude the ''whipsaw'' effect on U.S. revenue which occurs when a party is allowed to claim a price for ''computing the customs value of such property by the purchaser'' that is lower than the price claimed for tax purposes.

When section 1059A was enacted, Congress was aware that the Customs value statute recently had been amended to make price paid the critical cost factor taken into account by the Customs Service in valuing goods for duty purposes. The legislative history of section 1059A also indicates that Congress wanted section 1059A to address this situation by attempting to place a ceiling on ''the amount of any [such] costs'' that can be claimed for tax purposes. All of the applicable legislative reports indicate, without exception, that Congress intended that section 1059A would instill some *uniformity* on the amount of costs which may be claimed to the IRS for tax purposes by limiting the amount of such costs to the amount claimed to, and taken into account by, the Customs Service in computing the Customs value.

The legislative history did state that appropriate adjustments may be made in cases where customs pricing rules differ from appropriate tax rules—as, for example, with the inclusion or exclusion of freight charges. Finally, the history states section 1059A applies to transfer prices subject to section 482 of the Internal Revenue Code.

In July of 1994, the Internal Revenue Service (IRS) issued final regulations implementing 26 U.S.C. 482. The IRS subsequently began considering whether and to what extent the 1059A regulations should be amended in the context of the new section 482 regulations. The section 482 regulations, specifically 26 CFR 1.482–1(a)(3), permits a controlled taxpayer, if necessary to reflect an ''arm's length result'', to ''report on timely filed U.S. income tax return (including extensions) the results of its controlled transactions based upon prices different from those actually charged.'' The IRS is considering whether the 1059A regulations should be amended to allow the taxpayer, under appropriate circumstances, to make the upward section 482 adjustment.

This document announces a test that will facilitate the IRS/Customs decision as to whether reconciliation procedures provide a viable and appropriate circumstance for a taxpayer/importer to make a post entry upward adjustment to the price of imported merchandise.

Customs Value Law

For Customs purposes the appraised value of imported merchandise is determined pursuant to section 402 of the Tariff Act of 1930, as amended by the Trade Agreements Act (TAA) of 1979. Transaction value is the primary basis of appraisement. Transaction value is defined in section 402(b)(1) as the ''price actually paid or payable for the merchandise when sold for exportation to the United States'' plus specified statutory additions.

Pursuant to section 402(b)(2)(A)(iv) the transaction value of imported merchandise shall be the appraised value *only if* the buyer and seller are not related, or if the buyer and the seller are related, the transaction value is acceptable under 402(b)(2)(B). Section 402(b)(2)(B) provides that transaction value between a related buyer and seller is acceptable if the buyer demonstrates that the declared transaction value meets one of the following two tests: 1) Circumstances of the Sale or 2) Test Values.

The reconciliation test, announced in this document, is designed for participants that engage in related party transactions.

Related Party Transactions

Under section 402(g) of the TAA the following persons are treated as related:

(1) Members of the same family, including brothers and sisters (whether by whole or half blood), spouse, ancestors, and lineal descendants.

(2) Any officer or director of an organization and such organization.

(3) An officer or director of an organization and an officer or director of another organization, if each such individual is also an officer or director in the other organization.

(4) Partners.

(5) Employer and employee.

(6) Any person directly or indirectly owning, controlling, or holding with power to vote, 5 percent or more of the outstanding voting stock or shares of any organization and such organization.

(7) Two or more persons directly or indirectly controlling, controlled by, or under common control with, any person.

For purposes of 402(g)(G), the phrase ''two or more persons directly or indirectly controlling, controlled by, or under common control with, any person'' is understood to cover the following situations:

(1) where one of them directly or indirectly controls the other;

(2) where both of them are directly or indirectly controlled by a third person; or

(3) where together they directly or indirectly control a third person.

For purposes of this test, Customs will consider the fact that the related party importer has reason to believe that an upward adjustment may be made to the price as evidence that the relationship may have affected the price actually paid or payable for the imported merchandise. Therefore, transaction value may not be acceptable.

Rather, the merchandise may be appraised under section 402(f). The appraised value pursuant to section 402(f) will be derived from the transaction value method. That is, the appraised value will be the price for the imported merchandise after the upward section 482 adjustment is undertaken by the importer/taxpayer plus the applicable statutory additions: packing, selling commissions, assists, royalties/license fees and proceeds of subsequent resale. In order to participate in the test, the importer/taxpayer must agree that 402(f) is the proper basis of appraisement, in the event an upward section 482 adjustment is, in fact, claimed for tax purposes.

Title VI of the North American Free Trade Agreement Implementation Act

In order for the importer to comply with Customs value law, when making upward adjustments, a mechanism must be established that permits the importer to submit information related to the upward adjustment after the time of entry. Customs has determined that the reconciliation provisions of the North American Free Trade Agreement Implementation Act (the Act) create a possible vehicle permitting these circumstances. Specifically, Title VI of the Act, Public Law 103–182, 107 Stat. 2057 (December 8, 1993), contains provisions pertaining to Customs Modernization (107 Stat. 2170). Subtitle B of Title VI establishes the National Customs Automation Program (NCAP), an automated and electronic system for the processing of commercial importations. Section 637 in Subtitle B of the Act amends Section 484 of the Tariff Act of 1930 by establishing a new subsection (b) entitled ''Reconciliation''. Reconciliation is a planned component of the NCAP. Section 631 of the Act authorizes tests of planned NCAP components. Section 101.9(b) of the

Customs Regulations, provides the regulations governing the testing of NCAP components. See T.D. 95–21 (60 FR 14211, March 16, 1995).

This test is established pursuant to those regulations.

Reconciliation

Reconciliation will allow an importer to provide Customs with information not available at the time of entry summary filing and which is necessary to ascertain the final appraisement of imported merchandise. The reconciliation must be filed no later than 15 months from the date of the first entry summary filed under that reconciliation.

A reconciliation permits the liquidation of an entry summary/summaries despite the fact that undetermined information will be transmitted to Customs at a later time through the reconciliation process. Assuming there are no other outstanding issues, the entry summaries will be liquidated for all purposes other than that which is identified by the importer as pending reconciliation. The reconciliation will be liquidated in accordance with 19 U.S.C. 1500. The liquidation of the reconciliation may be protested, in accordance with 19 U.S.C. 1514, but the protest may only pertain to issues covered by the liquidated reconciliation.

Description of Test

This test will be limited to participants who meet the eligibility criteria set forth below. It will cover entry summaries filed by those participants from October 1, 1995 to March 31, 1996 or the end of the participant's tax year, whichever comes first. By statute, reconciliation must be filed within 15 months of the entry summary. For purposes of this test, participants must file the reconciliation within 15 months of the filing of the first affected entry summary or by December 31, 1996, whichever comes first.

Application

Applications will be submitted to Mr. William F. Inch, Director, Office of Regulatory Audit, United States Customs Service, 1301 Constitution Ave. N.W. Room 2311, Washington D.C. 20229–0001. All applicants will be notified in writing of approval or disapproval regarding test participation. All applicants who meet the eligibility criteria will be chosen to participate in this test. The application must address the ability to meet the eligibility requirements. The applicant must consent, in the application, to all the conditions set forth in the description of this test and eligibility criteria. The applicant must set forth in the application the date on which the applicant's tax year ends.

By applying, applicants agree that the value for merchandise covered by all entry summaries filed by them or on their behalf on or after October 1, 1995 until the end of the tax year or March 31, 1996, whichever comes first, shall be finally determined by the liquidation of the reconciliation filed in accordance with the test. The Office of Regulatory Audit will review the application to determine that the applicant has met all eligibility requirements.

Documentation Required To Support Reconciliation

The approved participant shall maintain and produce upon Customs request all relevant documentation to support the change in the entered value. The reconciliation shall include the following information:

1. The entry numbers and dates of all entries filed with Customs during the period.

2. A cumulative list of units imported by classification number and the change (final entered value) to that entered value.

In order to support the reconciliation, the approved applicant shall maintain and produce upon Customs request all relevant documentation to support the change in entered value. The approved applicant may be required to provide any or all of the following documentation:

1. The IRS Schedule M–1, and the Form 1120 Corporate Tax Return.

2. Any and all other supporting documentation filed along with the M–1 and the Form 1120 that was furnished to the IRS.

3. Any or all IRS documents or communications with the participant regarding the relevant 482 adjustment.

4. Any and all documentation including any books and records or computerized data to relate the 482 adjustment to the entries filed with Customs.

Such information and supporting material should be provided in a format or electronic media commonly in use. Examples are an IBM compatible computer 3.5 disk utilizing a software product such as Access or Excel or other similar spreadsheet or database application such as Lotus 1, 2, 3.

Verification

Customs Regulatory Audit, in conjunction with other Customs disciplines, will determine if any verification effort is necessary to establish the accuracy of the details submitted. The extent of the verification will be determined by Regulatory Audit, and if an audit is required, established Regulatory Audit procedures will be followed.

Eligibility Criteria

In order to qualify for this test of reconciliation, importers must have reason to believe they may invoke the IRS regulations to make upward adjustments to the price of the imported merchandise. Importers must have the capability to provide, on an entry-by-entry basis, the electronic entry of merchandise and the electronic entry summary of required information (ABI). Other requirements and conditions are as follows:

1. The test only applies to the related party transactions engaged in by participants who qualify under Internal Revenue Service Section 482 requirements to make upward adjustments and which are not subject to Antidumping/Countervailing Duty proceedings.

2. Participants' tax year must end between October 31, 1995 and March 31, 1996.

3. Customs decision to allow a company to participate in the test program will be made in consultation with the Internal Revenue Service.

4. Each participant must provide U.S. Customs with the methodology that will be used to arrive at the final price of the imported merchandise.

5. Each participant agrees that appraisement is under section 402(f) of the Tariff Act of 1930, as amended by the Trade Agreements Act of 1979, if, in fact, an upward section 482 adjustment is made for tax purposes.

6. Entries involving merchandise under this test will not be eligible for drawback.

Selectivity Criteria

The Office of Regulatory Audit, in conjunction with other Customs disciplines, will review the application to ensure the eligibility requirements are met. All applicants who meet the eligibility criteria will be allowed to participate, provided no other Customs office objects.

Objectives of the Test

The objectives of this test are:

1. To work with the trade community to further compliance in the value area regarding related party transactions.

2. To allow companies intending to make Internal Revenue Service Section 482 adjustments, which may ultimately result in an upward adjustment to the price for merchandise, the opportunity

to reconcile their business operations regarding U.S. Customs and Internal Revenue Service requirements applicable to related party transactions.

3. To determine if reconciliation is a viable method to ensure a coordinated and consistent Customs response to Internal Revenue Section 482 adjustments which result in the upward adjustment of the Customs valuation under Section 1059A.

5. To test the type of information needed by Customs to process a reconciliation.

Test Evaluation Criteria

The criteria which will be used to evaluate whether or not reconciliation is a viable means to allow importers which make upward adjustments to the price of imported merchandise will be based on measurable outcomes which include:

1. The number of participants;

2. Customs resources expended to administer and monitor the program;

3. Customs resources expended to verify final reconciliation entry claims and the methodologies applied;

4. Amount of additional revenue collected;

5. Survey of participants on the conduct of the test and its affect on their business operations; and

6. IRS and Census satisfaction with the results of the test.

Dated: June 28, 1995.

Karen J. Hiatt,

Acting Assistant Commissioner, Office of Strategic Trade.

[FR Doc. 95–16406 Filed 7–3–95; 8:45 am]

BILLING CODE 4820–02–P

Sunshine Act Meetings

Federal Register
Vol. 60, No. 128
Wednesday, July 5, 1995

This section of the FEDERAL REGISTER contains notices of meetings published under the ''Government in the Sunshine Act'' (Pub. L. 94-409) 5 U.S.C. 552b(e)(3).

U.S. COMMISSION ON CIVIL RIGHTS

DATE AND TIME: Friday, July 14, 1995, 9:30 a.m.

PLACE: U.S. Commission on Civil Rights, 624 Ninth Street, NW, Room 540, Washington, DC 20425.

STATUS:

Agenda

I. Approval of Agenda
II. Approval of Minutes of June 9, 1995 Meeting
III. Announcements
IV. Staff Director's Report
V. ''Federal Title VI Enforcement to Ensure Nondiscrimination in Federally Assisted Programs''
VI. SAC Chair Conference Followup
VII. State Advisory Committee Report ''Rising Racial Tensions in Logan County, West Virginia''
VIII. Future Agenda Items

CONTACT PERSON FOR FURTHER INFORMATION: Barbara Brooks, Press and Communications, (202) 376–8312.

Dated: June 30, 1995.

Miguel A. Sapp,
Acting Solicitor.

[FR Doc. 95–16585 Filed 6–30–95; 2:30 pm]

BILLING CODE 6335–01–M

FEDERAL HOUSING FINANCE BOARD

''FEDERAL REGISTER'' CITATION OF PREVIOUS ANNOUNCEMENT: 60 FR 32574, June 22, 1995.

PREVIOUSLY ANNOUNCED TIME AND DATE OF THE MEETING: 9:00 a.m., Thursday, June 29, 1995.

CHANGE IN THE MEETING: The following topic was added to the agenda during the open meeting.

- FHLBank of Des Moines Proposal to Certify Minneapolis Community Development Agency as a Nonmember Mortgagee.

CONTACT PERSON FOR MORE INFORMATION: Elaine L. Baker, Executive Secretary to the Board, (202) 408–2837.

Rita I. Fair,
Managing Director.

[FR Doc. 95–16526 Filed 6–30–95; 1:06 pm]

BILLING CODE 6725–01–M

NUCLEAR REGULATORY COMMISSION

DATE: Weeks of July 3, 10, 17, and 24, 1995.

PLACE: Commissioners' Conference Room, 11555 Rockville Pike, Rockville, Maryland.

STATUS: Public.

MATTERS TO BE CONSIDERED:

Week of July 3

There are no meetings scheduled for the Week of July 3.

Week of July 10—Tentative

Wednesday, July 12

10:00 a.m.
Briefing on Status of Watts Bar and Browns Ferry 3 (Public Meeting)
(Contact: Fred Hebdon, 301–415–1485)

Week of July 17—Tentative

There are no meetings scheduled for the Week of July 17.

Week of July 24—Tentative

Wednesday, July 26

10:00 a.m.
Briefing on Status of Maintenance Rule (Public Meeting)
(Contact: Richard Correria, 301–415–1009)
2:00 p.m.
Briefing on Reactor Inspection Program (Public Meeting)
(Contact: M.R. Johnson, 301–415–1241)

Thursday, July 27

10:00 a.m.
Meeting with Nuclear Safety Research Review Committee (NSRRC) (Public Meeting)
(Contact: George Sege, 301–415–6593)

ADDITIONAL INFORMATION: By a vote of 4–0 on June 29, the Commission determined pursuant to U.S.C. 552b(e) and § 9.107(a) of the Commission's rules that ''Affirmation of Sequoyah Fuel Corporation and General Atomics; LBP–95–05 Ruling on Motions for Protective Order'' (Public Meeting) be held on June 29, and on less than one week's notice to the public.

Note: Beginning July 2, 1995, the Nuclear Regulatory Commission will be operating under a delegation of authority to Chairman Shirley A. Jackson, because with three vacancies on the Commission, it will be temporarily without a quorum. As a legal matter, therefore, the Sunshine Act does not apply; but in the interests of openness and public accountability, the Commission will continue to conduct business as though the Sunshine Act were applicable.

The schedule for Commission meetings is subject to change on short notice. To verify the status of meetings call (recording)—(301) 415–1292.

CONTACT PERSON FOR MORE INFORMATION: Bill Hill (301) 415–1661.

This notice is distributed by mail to several hundred subscribers; if you no longer wish to receive it, or would like to be added to it, please contact the Office of the Secretary, Attn: Operations Branch, Washington, D.C. 20555 (301–415–1963).

In addition, distribution of this meeting notice over the internet system is available. If you are interested in receiving this Commission meeting schedule electronically, please send an electronic message to alb@nrc.gov or gkt@nrc.gov.

Dated: June 30, 1995.

William M. Hill, Jr.,
SECY Tracking Officer, Office of the Secretary.

[FR Doc. 95–16602 Filed 6–30–95; 2:31 pm]

BILLING CODE 7590–01–M

UNITED STATES INTERNATIONAL TRADE COMMISSION

[USITC SE–95–020]

TIME AND DATES: July 11, 1995 at 3:30 p.m.

PLACE: Room 101, 500 E Street S.W., Washington, DC 20436.

STATUS: Open to the public.

MATTERS TO BE CONSIDERED:

1. Agenda for future meeting.
2. Minutes.
3. Ratification List.
4. Inv. No. 731–TA–705 (Final) (Furfuryl Alcohol from Thailand)—briefing and vote.
5. Outstanding action jackets: None.

In accordance with Commission policy, subject matter listed above, not disposed of at the scheduled meeting, may be carried over to the agenda of the following meeting.

Issued: June 29, 1995.

Donna R. Koehnke,
Secretary.

[FR Doc. 95–16574 Filed 6–30–95; 1:07 pm]

BILLING CODE 7020–02–P

BOARD OF GOVERNORS OF THE FEDERAL RESERVE SYSTEM

TIME AND DATE: 10:00 a.m., Monday, July 10, 1995.

PLACE: Marriner S. Eccles Federal Reserve Board Building, C Street

entrance between 20th and 21st Streets, N.W., Washington, D.C. 20551.

STATUS: Closed.

MATTERS TO BE CONSIDERED:

1. Personnel actions (appointments, promotions, assignments, reassignments, and salary actions) involving individual Federal Reserve System employees.
2. Any items carried forward from a previously announced meeting.

CONTACT PERSON FOR MORE INFORMATION: Mr. Joseph R. Coyne, Assistant to the Board; (202) 452–3204. You may call (202) 452–3207, beginning at approximately 5 p.m. two business days before this meeting, for a recorded announcement of bank and bank holding company applications scheduled for the meeting.

Dated: June 30, 1995.

Jennifer J. Johnson,

Deputy Secretary of the Board.

[FR Doc. 95–16646 Filed 6–30–95; 3:51 pm]

BILLING CODE 6210–01–P

NATIONAL TRANSPORTATION SAFETY BOARD

TIME AND DATE: 9:30 a.m., Tuesday, July 11, 1995.

PLACE: The Board Room, 5th Floor, 490 L'Enfant Plaza, S.W., Washington, D.C. 20594.

STATUS: Open.

MATTERS TO BE CONSIDERED:

6443A—Marine Accident Report: Fire On Board the U.S. Fish Processing Vessel ALL ALASKAN in the Bering Sea Near Unimak Island, Alaska on July 24, 1994.

NEWS MEDIA CONTACT: Telephone: (202) 382–0660.

FOR MORE INFORMATION CONTACT: Bea Hardesty, (202) 382–6525.

Dated: June 30, 1995.

Bea Hardesty,

Federal Register Liaison Officer.

[FR Doc. 95–16638 Filed 6–30–95; 3:50 pm]

BILLING CODE 7533–01–P

Corrections

Federal Register

Vol. 60, No. 128

Wednesday, July 5, 1995

This section of the FEDERAL REGISTER contains editorial corrections of previously published Presidential, Rule, Proposed Rule, and Notice documents. These corrections are prepared by the Office of the Federal Register. Agency prepared corrections are issued as signed documents and appear in the appropriate document categories elsewhere in the issue.

DEPARTMENT OF EDUCATION

RIN 1810-AA79

34 CFR Part 263

Indian Fellowship and Professional Development Programs

Correction

In final rule document 95–15655, pages 33295 through 33298 in the issue of Tuesday, June 27, 1995, should be removed.

BILLING CODE 1505–01–D

DEPARTMENT OF JUSTICE

Immigration and Naturalization Service

[INS No. 1726-95]

Notice of Intent to Prepare a Draft Environmental Impact Statement (DEIS) and Scoping Meeting

Correction

In notice document 95–15302 appearing on page 32563, in the issue of Thursday, June 22, 1995, make the following correction:

On page 32563, in the second column, under **SUMMARY:**, in the 4th paragraph, in the 10th line, ''10 beds'' should read ''100 beds''.

BILLING CODE 1505–01–D

Reader Aids

Federal Register

Vol. 60, No. 128

Wednesday, July 5, 1995

INFORMATION AND ASSISTANCE

Federal Register

Index, finding aids & general information	**202–523–5227**
Public inspection announcement line	**523–5215**
Corrections to published documents	**523–5237**
Document drafting information	**523–3187**
Machine readable documents	**523–4534**

Code of Federal Regulations

Index, finding aids & general information	**523–5227**
Printing schedules	**523–3419**

Laws

Public Laws Update Service (numbers, dates, etc.)	**523–6641**
Additional information	**523–5230**

Presidential Documents

Executive orders and proclamations	**523–5230**
Public Papers of the Presidents	**523–5230**
Weekly Compilation of Presidential Documents	**523–5230**

The United States Government Manual

General information	**523–5230**

Other Services

Data base and machine readable specifications	**523–4534**
Guide to Record Retention Requirements	**523–3187**
Legal staff	**523–4534**
Privacy Act Compilation	**523–3187**
Public Laws Update Service (PLUS)	**523–6641**
TDD for the hearing impaired	**523–5229**

ELECTRONIC BULLETIN BOARD

Free **Electronic Bulletin Board** service for Public Law numbers, Federal Register finding aids, and list of documents on public inspection. **202–275–0920**

FAX-ON-DEMAND

You may access our Fax-On-Demand service. You only need a fax machine and there is no charge for the service except for long distance telephone charges the user may incur. The list of documents on public inspection and the daily Federal Register's table of contents are available using this service. The document numbers are 7050-Public Inspection list and 7051-Table of Contents list. The public inspection list will be updated immediately for documents filed on an emergency basis.
NOTE: YOU WILL ONLY GET A LISTING OF DOCUMENTS ON FILE AND NOT THE ACTUAL DOCUMENT. Documents on public inspection may be viewed and copied in our office located at 800 North Capitol Street, N.W., Suite 700. The Fax-On-Demand telephone number is: **301–713–6905**

FEDERAL REGISTER PAGES AND DATES, JULY

34453–34842.....3
34843–35112.....5

CFR PARTS AFFECTED DURING JULY

At the end of each month, the Office of the Federal Register publishes separately a List of CFR Sections Affected (LSA), which lists parts and sections affected by documents published since the revision date of each title.

7 CFR
956.....34843
958.....34453
1955.....34454
2812.....34456
Proposed Rules:
1.....34474
47.....34474
319.....34832

12 CFR
Proposed Rules:
20.....34907
21.....34476
28.....34907
208.....34481
211.....34481
225.....34481

14 CFR
39.....34844
71.....34845

16 CFR
Proposed Rules:
436.....34485
1500.....34922
1507.....34922

17 CFR
30.....34458

21 CFR
102.....34459
558.....34460
Proposed Rules:
314.....34486

23 CFR
645.....34846

24 CFR
882.....34660
887.....34660
982.....34660
983.....34660

25 CFR
Proposed Rules:
Ch. I.....34488

29 CFR
1960.....34851

30 CFR
Proposed Rules:
948.....34934

34 CFR
200.....34800
201.....34800
203.....34800
205.....34800
212.....34800
263.....35111

36 CFR
701.....34852

39 CFR
111.....34854

40 CFR
9.....34582
52 .....34856, 34859, 34867
81.....34461, 34859
90.....34582
180 .....34868, 34869, 34871, 34874, 34876
185.....34876
186.....34876
281.....34879
704.....34462
707.....34462
712.....34462, 34879
716.....34462, 34879
720.....34462
721.....34462
723.....34462
761.....34462
763.....34462
766.....34462
790.....34462
795.....34462
796.....34462
799.....34462
Proposed Rules:
52.....34488, 34938
63.....34938
70.....34488, 34493
80.....34940
140.....34940
180.....34943, 34945
430.....34938

42 CFR
417.....34885

44 CFR
65.....34888, 34889
67.....34891
Proposed Rules:
67.....34947

47 CFR
0.....34901
1.....34902
Proposed Rules:
73.....34959

48 CFR
1 .....34732, 34733, 34735

2 .....34732, 34735, 34741
3.....34732, 34741
4 .....34732, 34735, 34741
5 .....34732, 34735, 34741
6.....34732, 34741
7.....34732, 34735
8 .....34732, 34735, 34741
9 .....34732, 34735, 34741
12.....34732, 34735
13.....34732, 34741
14.....34732, 34735
15 .....34732, 34735, 34741
16 .....34732, 34735, 34741
19 .....34732, 34735, 34741
20 .....34732, 34735, 34741
22.....34732, 34741
23.....34732, 34741
25 .....34732, 34735, 34741
27.....34732, 34741
28 .....34732, 34735, 34741
29.....34741
32 .....34732, 34735, 34741
33.....34732
36 .....34732, 34735, 34741
41.....34732, 34741
42.....34732, 34741
43.....34732, 34741
44.....34732, 34741
45 .....34732, 34735, 34741
46.....34732, 34741
47.....34732, 34741
49.....34732, 34741
52 .....34732, 34735, 34741
53 .....34732, 34735, 34741
204.....34467
215.....34467
217.....34467
225.....34470, 34471
243.....34467
252.....34471

Proposed Rules:

206.....34497
207.....34497
225.....34497

49 CFR

Proposed Rules:

225.....34498
575.....34961

50 CFR

301.....34472
663.....34472
675.....34904
677.....34904

Proposed Rules:

635.....34965