7–3–95
Vol. 60 No. 127
Pages 34453–34842

federal register

Monday
July 3, 1995

Briefings on How To Use the Federal Register
For information on briefing in Washington, DC, see announcement on the inside cover of this issue.

FEDERAL REGISTER Published daily, Monday through Friday, (not published on Saturdays, Sundays, or on official holidays), by the Office of the Federal Register, National Archives and Records Administration, Washington, DC 20408, under the Federal Register Act (49 Stat. 500, as amended; 44 U.S.C. Ch. 15) and the regulations of the Administrative Committee of the Federal Register (1 CFR Ch. I). Distribution is made only by the Superintendent of Documents, U.S. Government Printing Office, Washington, DC 20402.

The **Federal Register** provides a uniform system for making available to the public regulations and legal notices issued by Federal agencies. These include Presidential proclamations and Executive Orders and Federal agency documents having general applicability and legal effect, documents required to be published by act of Congress and other Federal agency documents of public interest. Documents are on file for public inspection in the Office of the Federal Register the day before they are published, unless earlier filing is requested by the issuing agency.

The seal of the National Archives and Records Administration authenticates this issue of the **Federal Register** as the official serial publication established under the Federal Register Act. 44 U.S.C. 1507 provides that the contents of the **Federal Register** shall be judicially noticed.

The **Federal Register** is published in paper, 24x microfiche and as an online database through *GPO Access*, a service of the U.S. Government Printing Office. The online database is updated by 6 a.m. each day the **Federal Register** is published. The database includes both text and graphics from Volume 59, Number 1 (January 2, 1994) forward. It is available on a Wide Area Information Server (WAIS) through the Internet and via asynchronous dial-in. The annual subscription fee for a single workstation is $375. Six-month subscriptions are available for $200 and one month of access can be purchased for $35. Discounts are available for multiple-workstation subscriptions. To subscribe, Internet users should telnet to swais.access.gpo.gov and login as newuser (all lower case); no password is required. Dial-in users should use communications software and modem to call (202) 512–1661 and login as swais (all lower case); no password is required; at the second login prompt, login as newuser (all lower case); no password is required. Follow the instructions on the screen to register for a subscription for the **Federal Register** Online via *GPO Access.* For assistance, contact the *GPO Access* User Support Team by sending Internet e-mail to help@eids05.eids.gpo.gov, or a fax to (202) 512–1262, or by calling (202) 512–1530 between 7 a.m. and 5 p.m. Eastern time, Monday through Friday, except Federal holidays.

The annual subscription price for the **Federal Register** paper edition is $494, or $544 for a combined **Federal Register**, Federal Register Index and List of CFR Sections Affected (LSA) subscription; the microfiche edition of the **Federal Register** including the Federal Register Index and LSA is $433. Six month subscriptions are available for one-half the annual rate. The charge for individual copies in paper form is $8.00 for each issue, or $8.00 for each group of pages as actually bound; or $1.50 for each issue in microfiche form. All prices include regular domestic postage and handling. International customers please add 25% for foreign handling. Remit check or money order, made payable to the Superintendent of Documents, or charge to your GPO Deposit Account, VISA or MasterCard. Mail to: New Orders, Superintendent of Documents, P.O. Box 371954, Pittsburgh, PA 15250–7954.

There are no restrictions on the republication of material appearing in the **Federal Register.**

How To Cite This Publication: Use the volume number and the page number. Example: 60 FR 12345.

SUBSCRIPTIONS AND COPIES

PUBLIC

Subscriptions:

Paper or fiche	**202–512–1800**
Assistance with public subscriptions	**512–1806**

Online:

Telnet swais.access.gpo.gov, login as newuser <enter>, no password <enter>; or use a modem to call (202) 512–1661, login as swais, no password <enter>, at the second login as newuser <enter>, no password <enter>.

Assistance with online subscriptions	**202–512–1530**

Single copies/back copies:

Paper or fiche	**512–1800**
Assistance with public single copies	**512–1803**

FEDERAL AGENCIES

Subscriptions:

Paper or fiche	**523–5243**
Assistance with Federal agency subscriptions	**523–5243**

For other telephone numbers, see the Reader Aids section at the end of this issue.

THE FEDERAL REGISTER

WHAT IT IS AND HOW TO USE IT

FOR: Any person who uses the Federal Register and Code of Federal Regulations.

WHO: The Office of the Federal Register.

WHAT: Free public briefings (approximately 3 hours) to present:

1. The regulatory process, with a focus on the Federal Register system and the public's role in the development of regulations.
2. The relationship between the Federal Register and Code of Federal Regulations.
3. The important elements of typical Federal Register documents.
4. An introduction to the finding aids of the FR/CFR system.

WHY: To provide the public with access to information necessary to research Federal agency regulations which directly affect them. There will be no discussion of specific agency regulations.

WASHINGTON, DC

WHEN: July 27 at 9:00 am

WHERE: Office of the Federal Register Conference Room, 800 North Capitol Street NW., Washington, DC (3 blocks north of Union Station Metro)

RESERVATIONS: 202–523–4538

Printed on recycled paper containing 100% post consumer waste

Contents

Federal Register

Vol. 60, No. 127

Monday, July 3, 1995

Administration on Aging
See Aging Administration

Agency for Health Care Policy and Research
NOTICES
Meetings:
Health Care Policy and Research Special Emphasis Panel, 34543

Agency for International Development
NOTICES
Housing guaranty program:
Panama, 34554–34555

Aging Administration
NOTICES
Meetings:
White House Conference on Aging Business Advisory Committee, 34543

Agricultural Marketing Service
RULES
Onions grown in—
Idaho and Oregon, 34453–34454

Agriculture Department
See Agricultural Marketing Service
See Animal and Plant Health Inspection Service
See Consolidated Farm Service Agency
See Food and Consumer Service
See Forest Service
See Rural Business and Cooperative Development Service
See Rural Housing and Community Development Service
See Rural Utilities Service
RULES
Donation of excess research equipment to educational institutions and nonprofit organizations; guidelines, 34456–34458
PROPOSED RULES
Practice and procedure:
Perishable Agricultural Commodities Act; formal adjudicatory proceedings, 34474–34476

Air Force Department
NOTICES
Patent licenses; non-exclusive, exclusive, or partially exclusive:
E/M Corp., 34523

Animal and Plant Health Inspection Service
PROPOSED RULES
Plant-related quarantine, foreign:
Hass avocado fruit from Mexico; importation, 34832–34842

Army Department
NOTICES
Environmental statements; availability, etc.:
Base realignment and closure—
Blue Grass Army Depot, Lexington Facility, KY, 34523

Arts and Humanities, National Foundation
See National Foundation on the Arts and the Humanities

Coast Guard
NOTICES
Committees; establishment, renewal, termination, etc.:
Chemical Transportation Advisory Committee, 34572

Commerce Department
See Economic Development Administration
See Export Administration Bureau
See Foreign-Trade Zones Board
See International Trade Administration
See National Oceanic and Atmospheric Administration

Commodity Futures Trading Commission
RULES
Foreign futures and options transactions:
Spot foreign exchange operation between Great Britain Pound, Deutsche Mark, and Italian Lira; conditions for offer or sale to persons in United States, 34458–34459

Comptroller of the Currency
PROPOSED RULES
Federal regulatory review:
Minimum security devices and procedures, reports of crimes and suspected crimes and bank secrecy compliance, 34476–34481

Consolidated Farm Service Agency
RULES
Program regulations:
Property management; technical amendments, 34454–34456

Consumer Product Safety Commission
NOTICES
Agency information collection activities under OMB review, 34522

Defense Department
See Air Force Department
See Army Department
RULES
Acquisition regulations:
Buy American Act determinations, 34470–34471
Sequence of progress payments and contract modifications, 34467–34470
Supercomputers of foreign manufacture; acquisition restriction, 34471–34472
Federal Acquisition Regulation (FAR):
Electronic contracting, 34735–34741
Guiding principles, 34733–34734
Miscellaneous amendments, 34732–34733
Simplified acquisition procedures and FACNET requirements, 34741–34766
PROPOSED RULES
Acquisition regulations:
Full and open competition; class justifications and approvals, 34497
Tank and automotive forging items, 34497–34498
NOTICES
Meetings:
Women in Services Advisory Committee, 34522–34523

Economic Development Administration
NOTICES
Trade adjustment assistance eligibility determination petitions:
Quali-Cast Foundry, Inc., et al., 34504

Education Department
RULES
Elementary and secondary education:
Helping disadvantaged children meet high standards, 34800–34830
NOTICES
Grants and cooperative agreements; availability, etc.:
Bilingual education and minority languages affairs—Academic excellence awards program, 34768–34787
Strengthening institutions and endowment challenge programs, 34523–34524

Energy Department
See Federal Energy Regulatory Commission
NOTICES
Financial assistance awards of $1 million or less; class deviations, 34524
Grant and cooperative agreement awards:
Petrosurveys, Inc., 34534
Meetings:
Human Radiation Experiments Advisory Committee, 34524–34525

Environmental Protection Agency
RULES
Air pollutants, hazardous; national emission standards:
New nonroad spark-ignition engines at or below 19 kilowatts, 34582–34657
Air quality planning purposes; designation of areas:
Minnesota, 34461–34462
Organization, functions, and authority delegations:
Pollution Prevention and Toxics Office; mailing addresses update for submissions, information requests, etc., 34462–34467
PROPOSED RULES
Air quality implementation plans; approval and promulgation; various States; Clean Air Act (State operating permits program):
California, 34488–34493
Clean Air Act:
State operating permits programs—Kansas, 34493–34497
NOTICES
Agency information collection activities under OMB review, 34530–34531
Meetings:
Science Advisory Board, 34531–34532
Superfund program:
Property containing contaminated aquifers; policy toward owners, 34790–34792
Prospective purchasers of contaminated property; guidance on agreements and model agreement availability, 34792–34798
Toxic and hazardous substances control:
Chemical testing—Data receipt, 34532

Export Administration Bureau
NOTICES
Export privileges, actions affecting:
American Technology Trading Group, 34504–34505
Brero, Mario, 34505–34506
Elizabeth Drive Liquidation Corp., 34506–34507
Freedman, Julia, 34507–34508
Samata S.A., 34508–34509
Wheeler, Robert J., 34509–34510

Farm Credit Administration
NOTICES
Meetings; Sunshine Act, 34579

Federal Aviation Administration
NOTICES
Airport noise compatibility program:
Palm Beach International Airport, FL, 34572–34576
Passenger facility charges; applications, etc.:
Huntsville International Airport, AL, 34576–34577

Federal Communications Commission
NOTICES
Agency information collection activities under OMB review, 34532–34533

Federal Emergency Management Agency
NOTICES
Disaster and emergency areas:
North Dakota, 34533
Oklahoma, 34533

Federal Energy Regulatory Commission
NOTICES
Electric rate and corporate regulation filings:
HIE Generadora S.A. et al., 34525–34527
PSI Energy, Inc., et al., 34527–34529
Hydroelectric applications, 34529
Applications, hearings, determinations, etc.:
Columbia Gas Transmission Corp., 34529–34530
Duke Power Co., 34530
Southwestern Electric Power Co., 34530

Federal Railroad Administration
PROPOSED RULES
Railroad accident reporting, 34498

Federal Reserve System
PROPOSED RULES
Membership of State banking institutions; international banking operations; and bank holding companies and change in bank control (Regulations H, K, and Y):
Suspicious financial transaction reporting process, 34481–34485

Federal Trade Commission
PROPOSED RULES
Trade regulation rules:
Franchising and business opportunity ventures; disclosure requirements and prohibitions; Federal regulatory review, 34485–34486
NOTICES
Premerger notification waiting periods; early terminations, 34533–34535
Prohibited trade practices:
Arizona Institute of Reproductive Medicine, Ltd., et al., 34535–34537
Council of Fashion Designers of America et al., 34537–34540
Live-Lee Productions, Inc., 34540–34543

Fish and Wildlife Service
NOTICES
Environmental statements; availability, etc.:
Incidental take permits—
Clark County, NV; Pahrump poolfish, 34554

Food and Consumer Service
NOTICES
Child nutrition programs:
Child and adult care food program—
National average payment rates; day care home food service payment rates, etc., 34499–34500
National school lunch, special milk, and school breakfast programs—
National average payments/maximum reimbursement rates, 34500–34502

Food and Drug Administration
RULES
Animal drugs, feeds, and related products:
Decoquinate, 34460–34461
Food for human consumption:
Crabmeat; common or usual name amendment, 34459–34460
PROPOSED RULES
Human drugs:
New and antibiotic drugs—
Drug master files, 34486–34488
NOTICES
Animal drugs, feeds, and related products:
New drug applications—
Refusal to file review committee meetings; change in procedures to include industry representatives, 34543–34544

Foreign-Trade Zones Board
NOTICES
Applications, hearings, determinations, etc.:
Illinois
Revere Ware Corp.; stainless steel and aluminum household cookware manufacturing plant, 34510
Puerto Rico
Ohmeda Caribe Inc./Ohmeda Pharmaceutical Manufacturing Inc.; pharmaceutical products manufacturing plant, 34510
Texas
Crown Central Petroleum Corp.; oil refinery complex, 34511
Neste Trifinery Petroleum Services; crude oil refinery, 34511

Forest Service
NOTICES
Environmental statements; availability, etc.:
Inyo National Forest, CA, 34502–34504

General Services Administration
RULES
Federal Acquisition Regulation (FAR):
Electronic contracting, 34735–34741
Guiding principles, 34733–34734
Miscellaneous amendments, 34732–34733
Simplified acquisition procedures and FACNET requirements, 34741–34766

Health and Human Services Department
See Agency for Health Care Policy and Research
See Aging Administration
See Food and Drug Administration
See National Institutes of Health
See Public Health Service
See Substance Abuse and Mental Health Services Administration

Housing and Urban Development Department
RULES
Public and Indian housing:
Certificate and voucher programs; conforming rule, 34660–34728
NOTICES
Agency information collection activities under OMB review, 34729

Indian Affairs Bureau
PROPOSED RULES
Indian Self-Determination Negotiated Rulemaking Committee
Meetings, 34488

Interior Department
See Fish and Wildlife Service
See Indian Affairs Bureau
See Land Management Bureau

International Development Cooperation Agency
See Agency for International Development

International Trade Administration
NOTICES
Antidumping:
Stainless steel cooking ware from—
Korea, 34514–34516
Welded stainless steel hollow products from—
Sweden, 34517
Antidumping and countervailing duties:
Administrative review requests, 34511–34512
Antidumping duty orders and findings:
Intent to revoke, 34512–34514
Cheese quota; foreign government subsidies:
Quarterly update, 34517–34518
Countervailing duties:
Lamb meat from—
New Zealand, 34518–34519
Countervailing duty orders:
Determinations not to revoke, 34518

Interstate Commerce Commission
NOTICES
Railroad operation, acquisition, construction, etc.:
Chicago & North Western Railway Co., 34555–34556
Ohio & Pennsylvania Railroad Co., 34556
Railroad services abandonment:
Missouri Pacific Railroad Co., 34556
Providence & Worcester Railroad Co., 34556–34557

Land Management Bureau
NOTICES
Agency information collection activities under OMB review, 34553
Resource management plans, etc.:
Florida; public lands, 34553

National Aeronautics and Space Administration
RULES
Federal Acquisition Regulation (FAR):
Electronic contracting, 34735–34741

Guiding principles, 34733–34734
Miscellaneous amendments, 34732–34733
Simplified acquisition procedures and FACNET requirements, 34741–34766
NOTICES
Meetings:
Technology and Commercialization Advisory Committee, 34557
Patent licenses; non-exclusive, exclusive, or partially exclusive:
Advanced Micro Devices, 34557–34558
Holmes Enterprises, Inc., 34558

National Archives and Records Administration
NOTICES
Agency records schedules; availability, 34558–34559

National Foundation on the Arts and the Humanities
NOTICES
Grants and cooperative agreements; availability, etc.:
Economic data collection on arts organizations, National system design, 34559
Meetings:
Design Advisory Panel, 34559

National Institutes of Health
NOTICES
Grants and cooperative agreements; availability, etc.:
High performance gene expression mapping assay system; development, 34544–34545
Meetings:
Gene Therapy Research, Panel to Assess NIH Investment, 34545
National Institute on Deafness and Other Communication Disorders, 34545
Research Grants Division special emphasis panels, 34545–34546

National Oceanic and Atmospheric Administration
RULES
Fishery conservation and management:
Pacific Coast groundfish, 34472–34473
Pacific Halibut Commission, International:
Pacific halibut fisheries
Treaty Indian commercial fishery (subarea 2A–1), 34472
NOTICES
Grants and cooperative agreements; availability, etc.:
Pan-American climate studies program, 34519–34522

Nuclear Regulatory Commission
NOTICES
Environmental statements; availability, etc.:
GPU Nuclear Corp., 34559–34560
Public Service Electric & Gas Co., 34560–34561
Organization, functions, and authority delegations:
Chairman; lack of quorum, 34561–34562

Personnel Management Office
NOTICES
Meetings:
National Partnership Council, 34562

Public Health Service
See Agency for Health Care Policy and Research
See Food and Drug Administration
See National Institutes of Health
See Substance Abuse and Mental Health Services Administration
NOTICES
Meetings:
National Toxicology Program; Scientific Counselors Board, 34546–34550
Organization, functions, and authority delegations:
Agency for Toxic Substances and Disease Registry, 34550
Centers for Disease Control and Prevention, 34550–34551

Research and Special Programs Administration
NOTICES
Meetings:
International standards on transport of dangerous goods, 34577

Rural Business and Cooperative Development Service
RULES
Program regulations:
Property management; technical amendments, 34454–34456

Rural Housing and Community Development Service
RULES
Program regulations:
Property management; technical amendments, 34454–34456

Rural Utilities Service
RULES
Program regulations:
Property management; technical amendments, 34454–34456

Securities and Exchange Commission
NOTICES
Self-regulatory organizations; proposed rule changes:
American Stock Exchange, Inc., 34562–34563
Chicago Stock Exchange, Inc., 34563–34564
New York Stock Exchange, Inc., 34564–34566
Applications, hearings, determinations, etc.:
Anchor National Life Insurance Co. et al., 34566–34568
Kansas City Life Insurance Co. et al., 34568–34570

Small Business Administration
NOTICES
Disaster loan areas:
Virginia et al., 34570–34571

Substance Abuse and Mental Health Services Administration
NOTICES
Federal agency urine drug testing; certified laboratories meeting minimum standards, list, 34551–34552

Transportation Department
See Coast Guard
See Federal Aviation Administration
See Federal Railroad Administration
See Research and Special Programs Administration
NOTICES
Agency information collection activities under OMB review, 34571–34572
NAFTA Land Transportation Standards Subcommittee work program:
Public docket for related information; establishment, 34572

Treasury Department
See Comptroller of the Currency

Udall, Morris K., Scholarship and Excellence in National Environmental Policy Foundation
NOTICES
Meetings; Sunshine Act, 34579

United States Information Agency
NOTICES
Meetings:
Cuba Broadcasting Advisory Board, 34577

Veterans Affairs Department
NOTICES
Senior Executive Service:
Performance Review Boards; membership, 34577–34578

Separate Parts In This Issue

Part II
Environmental Protection Agency, 34582–34657

Part III
Department of Housing and Urban Development, 34660–34729

Part IV
Department of Defense, 34732–34766

Part V
Department of Education, 34768–34787

Part VI
Environmental Protection Agency, 34790–34798

Part VII
Department of Education, 34800–34830

Part VIII
Department of Agriculture, Animal and Plant Health Inspection Service, 34832–34842

Reader Aids
Additional information, including a list of public laws, telephone numbers, and finding aids, appears in the Reader Aids section at the end of this issue.

Electronic Bulletin Board
Free **Electronic Bulletin Board** service for Public Law numbers, **Federal Register** finding aids, and a list of documents on public inspection is available on 202–275–1538 or 275–0920.

CFR PARTS AFFECTED IN THIS ISSUE

A cumulative list of the parts affected this month can be found in the Reader Aids section at the end of this issue.

7 CFR
958 34453
1955 34454
2812 34456
Proposed Rules:
1 34474
47 34474
319 34832

12 CFR
Proposed Rules:
21 34476
208 34481
211 34481
225 34481

16 CFR
Proposed Rules:
436 34485

17 CFR
30 34458

21 CFR
102 34459
558 34460
Proposed Rules:
314 34486

24 CFR
882 34660
887 34660
982 34660
983 34660

25 CFR
Proposed Rules:
Ch. I 34488

34 CFR
200 34800
201 34800
203 34800
205 34800
212 34800

40 CFR
9 34582
81 34461
90 34582
704 34462
707 34462
712 34462
716 34462
720 34462
721 34462
723 34462
761 34462
763 34462
766 34462
790 34462
795 34462
796 34462
799 34462
Proposed Rules:
52 34488
70 2 (documents) 34488, 34493

48 CFR
1 (3 documents) 34732, 34733, 34735
2 (3 documents) 34732, 34735, 34741
3 (2 documents) 34732, 34741
4 (3 documents) 34732, 34735, 34741
5 (3 documents) 34732, 34735, 34741
6 (2 documents) 34732, 34741
7 (2 documents) 34732, 34735
8 (3 documents) 34732, 34735, 34741
9 (3 documents) 34732, 34735, 34741
12 (2 documents) 34732, 34735
13 (2 documents) 34732, 34741
14 (2 documents) 34732, 34735
15 (3 documents) 34732, 34735, 34741
16 (3 documents) 34732, 34735, 34741
19 (3 documents) 34732, 34735, 34741
20 (3 documents) 34732, 34735, 34741
22 (2 documents) 34732, 34741
23 (2 documents) 34732, 34741
25 (3 documents) 34732, 34735, 34741
27 (2 documents) 34732, 34741
28 (3 documents) 34732, 34735, 34741
29 34741
32 (3 documents) 34732, 34735, 34741
33 34732
36 (3 documents) 34732, 34735, 34741
41 (2 documents) 34732, 34741
42 (2 documents) 34732, 34741
43 (2 documents) 34732, 34741
44 (2 documents) 34732, 34741
45 (3 documents) 34732, 34735, 34741
46 (2 documents) 34732, 34741
47 (2 documents) 34732, 34741
49 (2 documents) 34732, 34741
52 (3 documents) 34732, 34735, 34741
53 (3 documents) 34732, 34735, 34741
204 34467
215 34467
217 34467
225 (2 documents) 34470, 34471
243 34467
252 34471
Proposed Rules:
206 34497
207 34497
225 34497

49 CFR
Proposed Rules:
225 34498

50 CFR
301 34472
663 34472

Rules and Regulations

Federal Register
Vol. 60, No. 127
Monday, July 3, 1995

This section of the FEDERAL REGISTER contains regulatory documents having general applicability and legal effect, most of which are keyed to and codified in the Code of Federal Regulations, which is published under 50 titles pursuant to 44 U.S.C. 1510.

The Code of Federal Regulations is sold by the Superintendent of Documents. Prices of new books are listed in the first FEDERAL REGISTER issue of each week.

DEPARTMENT OF AGRICULTURE

Agricultural Marketing Service

7 CFR Part 958

[Docket No. FV95–958–1FIR]

Idaho-Eastern Oregon Onions; Expenses and Assessment Rate

AGENCY: Agricultural Marketing Service, USDA.

ACTION: Final rule.

SUMMARY: The Department of Agriculture (Department) is adopting as a final rule, without change, the provisions of an interim final rule that authorized expenses and established an assessment rate that generated funds to pay those expenses. Authorization of this budget enables the Idaho-Eastern Oregon Onion Committee (Committee) to incur expenses that are reasonable and necessary to administer the program. Funds to administer this program are derived from assessments on handlers.

EFFECTIVE DATE: July 1, 1995, through June 30, 1996.

FOR FURTHER INFORMATION CONTACT: Martha Sue Clark, Marketing Order Administration Branch, Fruit and Vegetable Division, AMS, USDA, P.O. Box 96456, room 2523–S, Washington, DC 20090–6456, telephone 202–720–9918, or Robert J. Curry, Northwest Marketing Field Office, Fruit and Vegetable Division, AMS, USDA, Green-Wyatt Federal Building, room 369, 1220 Southwest Third Avenue, Portland, OR 97204, telephone 503–326–2724.

SUPPLEMENTARY INFORMATION: This rule is issued under Marketing Agreement No. 130 and Order No. 958, both as amended (7 CFR part 958), regulating the handling of onions grown in designated counties in Idaho, and Malheur County, Oregon. The marketing agreement and order are effective under the Agricultural Marketing Agreement Act of 1937, as amended (7 U.S.C. 601–674), hereinafter referred to as the Act.

The Department is issuing this rule in conformance with Executive Order 12866.

This rule has been reviewed under Executive Order 12778, Civil Justice Reform. Under the provisions of the marketing order now in effect, Idaho-Eastern Oregon onions are subject to assessments. It is intended that the assessment rate as issued herein will be applicable to all assessable onions handled during the 1995–96 fiscal period, which began July 1, 1995, and ends June 30, 1996. This final rule will not preempt any State or local laws, regulations, or policies, unless they present an irreconcilable conflict with this rule.

The Act provides that administrative proceedings must be exhausted before parties may file suit in court. Under section 608c(15)(A) of the Act, any handler subject to an order may file with the Secretary a petition stating that the order, any provision of the order, or any obligation imposed in connection with the order is not in accordance with law and request a modification of the order or to be exempted therefrom. Such handler is afforded the opportunity for a hearing on the petition. After the hearing the Secretary would rule on the petition. The Act provides that the district court of the United States in any district in which the handler is an inhabitant, or has his or her principal place of business, has jurisdiction in equity to review the Secretary's ruling on the petition, provided a bill in equity is filed not later than 20 days after the date of the entry of the ruling.

Pursuant to requirements set forth in the Regulatory Flexibility Act (RFA), the Administrator of the Agricultural Marketing Service (AMS) has considered the economic impact of this rule on small entities.

The purpose of the RFA is to fit regulatory actions to the scale of business subject to such actions in order that small businesses will not be unduly or disproportionately burdened. Marketing orders issued pursuant to the Act, and the rules issued thereunder, are unique in that they are brought about through group action of essentially small entities acting on their own behalf. Thus, both statutes have small entity orientation and compatibility.

There are approximately 450 producers of Idaho-Eastern Oregon onions under the marketing order and approximately 35 handlers. Small agricultural producers have been defined by the Small Business Administration (13 CFR 121.601) as those having annual receipts of less than $500,000, and small agricultural service firms are defined as those whose annual receipts are less than $5,000,000. The majority of Idaho-Eastern Oregon onion producers and handlers may be classified as small entities.

The budget of expenses for the 1995–96 fiscal period was prepared by the Idaho-Eastern Oregon Onion Committee, the agency responsible for local administration of the marketing order, and submitted to the Department for approval. The members of the Committee are producers and handlers of Idaho-Eastern Oregon onions. They are familiar with the Committee's needs and with the costs for goods and services in their local area and are thus in a position to formulate an appropriate budget. The budget was formulated and discussed in a public meeting. Thus, all directly affected persons have had an opportunity to participate and provide input.

The assessment rate recommended by the Committee was derived by dividing anticipated expenses by expected shipments of Idaho-Eastern Oregon onions. Because that rate will be applied to actual shipments, it must be established at a rate that will provide sufficient income to pay the Committee's expenses.

The Committee met on March 21, 1995, and unanimously recommended a 1995–96 budget of $1,111,447, $91,408 more than the previous year. Budget items for 1995–96 which have increased compared to those budgeted for 1994–95 (in parentheses) are: Manager's salary, $33,472 ($30,429), office salaries, $66,222 ($62,816), payroll taxes, $9,229 ($8,642), health and medical insurance, $9,182 ($8,700), workman's compensation, $1,084 ($929), rent, $11,000 ($10,000), property insurance, $1,700 ($1,400), miscellaneous, $12,500 ($9,000), promotion, $724,076 ($668,500), and contingency, $75,000 ($50,000). Items which have decreased compared to those budgeted for 1994–95 (in parentheses) are: Salary and disability insurance, $1,072 ($1,099), research, $59,340 ($60,154), and property tax ($800) for which no funding was recommended this year.

All other items are budgeted at last year's amounts.

The Committee also unanimously recommended an assessment rate of $0.10 per hundredweight, the same as last season. This rate, when applied to anticipated shipments of 8,800,000 hundredweight, will yield $880,000 in assessment income. This, along with $45,000 in interest income and $186,447 from the Committee's authorized reserve, will be adequate to cover budgeted expenses. Funds in the reserve at the end of the 1994–95 fiscal period, estimated at $921,500, were within the maximum permitted by the order of one fiscal period's expenses.

An interim final rule was published in the **Federal Register** on May 9, 1995 (60 FR 24539). That interim final rule added § 958.239 to authorize expenses and establish an assessment rate for the Committee. That rule provided that interested persons could file comments through June 8, 1995. No comments were received.

While this rule will impose some additional costs on handlers, the costs are in the form of uniform assessments on all handlers. Some of the additional costs may be passed on to producers. However, these costs will be offset by the benefits derived by the operation of the marketing order. Therefore, the Administrator of the AMS has determined that this rule will not have a significant economic impact on a substantial number of small entities.

After consideration of all relevant material presented, including the information and recommendation submitted by the Committee and other available information, it is hereby found that this rule, as hereinafter set forth, will tend to effectuate the declared policy of the Act.

It is further found that good cause exists for not postponing the effective date of this rule until 30 days after publication in the **Federal Register** (5 U.S.C. 553) because the Committee needs to have sufficient funds to pay its expenses which are incurred on a continuous basis. The 1995–96 fiscal period began on July 1, 1995. The marketing order requires that the rate of assessment for the fiscal period apply to all assessable onions handled during the fiscal period. In addition, handlers are aware of this rule which was recommended by the Committee at a public meeting and published in the **Federal Register** as an interim final rule.

List of Subjects in 7 CFR Part 958

Marketing agreements, Onions, Reporting and recordkeeping requirements.

For the reasons set forth in the preamble, 7 CFR part 958 is amended as follows:

PART 958—ONIONS GROWN IN CERTAIN DESIGNATED COUNTIES IN IDAHO, AND MALHEUR COUNTY, OREGON

Accordingly, the interim final rule adding § 958.239 which was published at 60 FR 24539, May 9, 1995, is adopted as a final rule without change.

Dated: June 27, 1995.

Sharon Bomer Lauritsen,

Deputy Director, Fruit and Vegetable Division.

[FR Doc. 95–16225 Filed 6–30–95; 8:45 am]

BILLING CODE 3410–02–P

Rural Housing and Community Development Service

Rural Business and Cooperative Development Service

Rural Utilities Service

Consolidated Farm Service Agency

7 CFR Part 1955

Acquired Property Records

AGENCIES: Rural Housing and Community Development Service, Rural Business and Cooperative Development Service, Rural Utilities Service, Consolidated Farm Service Agency.

ACTION: Final rule.

SUMMARY: The issuing agencies amend their property management regulations to remove solely internal procedures and to make several nomenclature changes.

EFFECTIVE DATE: July 3, 1995.

FOR FURTHER INFORMATION CONTACT: Ron Gianella, Staff Accountant, Accounting Policy and Procedures Section I, Rural Housing and Community Development Service, USDA, Finance Office, 1520 Market Street, St. Louis, Missouri 63103, Telephone 314–539–6024.

SUPPLEMENTARY INFORMATION: Since this action has no impact on the public and involves only internal Agency management, it has been determined to be exempt from the requirements of Executive Order 12866.

Environmental Impact Statement

This document has been reviewed in accordance with 7 CFR part 1940, subpart G, Environmental Program. The issuing agencies have determined that this action does not constitute a major Federal action significantly affecting the quality of the human environment and in accordance with the National Environmental Policy Act of 1969, Public Law 91–190, an environmental impact statement is not required.

Intergovernmental Consultation

These programs/activities are listed in the Catalog of Federal Domestic Assistance under numbers:

10.404 Emergency Loans
10.405 Farm Labor Housing Loans and Grants
10.406 Farm Operating Loans
10.407 Farm Ownership Loans
10.410 Very Low to Moderate Income Housing Loans
10.411 Rural Housing Site Loans
10.415 Rural Rental Housing Loans
10.416 Soil and Water Loans
10.421 Indian Tribes and Tribal Corporation Loans
10.434 Nonprofit National Corporations Loan and Grant Program
10.760 Water and Waste Disposal Loan and Grant Program
10.764 Resource Conservation and Development Loans
10.765 Watershed Protection and Flood Prevention Loans
10.766 Community Facilities Loans
10.767 Intermediary Relending Program
10.768 Business and Industrial Loans

This internal management regulation does not directly affect these programs or activities; therefore, the intergovernmental consultation requirement of Executive Order No. 12372 does not apply.

Paperwork Reduction Act

The information collection requirements contained in these regulations have been approved by the Office of Management and Budget (OMB) under the provisions of 44 U.S.C. chapter 35 and have been assigned OMB control numbers 0575–0109 and 0575–0110 in accordance with the Paperwork Reduction Act of 1980 (44 U.S.C. 3507). The final rule does not revise or impose any new information collection or recordkeeping requirement from those approved by OMB.

Discussion of Final Rule

The issuing agencies are amending their property management regulations to remove solely administrative procedures in an effort to reduce federal agencies regulation. The procedures will remain in internal agency instructions. References to Farmers Home Administration (''FmHA'') and ''County Committee'' have been removed to reflect changes made by sections 226 and 227 of the Department of Agriculture Reorganization Act of 1994. Due to the reorganization of USDA, FmHA Farmer Programs now are being

administered as Farm Credit Programs by the Consolidated Farm Service Agency (CFSA). FmHA Rural Housing loans and Community Facilities loans now are administered by the Rural Housing and Community Development Service (RHCDS). Water and Waste facility loans are administered by the Rural Utilities Service (RUS), and Business and Industrial loans are handled by the Rural Business and Cooperative Development Service (RBCDS). The affected agencies are jointly issuing this final rule.

List of Subjects in 7 CFR Part 1955

Government property management.

Accordingly, part 1955, chapter XVIII, title 7, of the CFR, is amended as follows:

PART 1955—PROPERTY MANAGEMENT

1. The authority citation for part 1955 continues to read as follows:

Authority: 7 U.S.C. 1989; 42 U.S.C. 1480; 5 U.S.C. 301; 7 CFR 2.23 and 2.70.

Subpart A—Liquidation of Loans Secured by Real Estate and Acquisition of Real and Chattel Property

2. Section 1955.18 is amended by removing and reserving paragraphs (a) through (d) and (f) through (l).

Subpart B—Management of Property

3. Section 1955.63 is amended by revising the reference to ''County Committee'' in the third sentence of the introductory text to read ''Agency;'' by revising the references to ''FmHA or its successor agency under Public Law 103–354'' in paragraph (c) introductory text and paragraph (c)(3) to read ''the Agency;'' by removing and reserving paragraph (d); and by revising paragraphs (a) and (b) to read as follows:

§ 1955.63 Suitability determination.

* * * * *

(a) *Property other than housing.* Property which secured loans or was acquired under the CONACT will be classified as suitable or surplus by the Agency. CONACT property originally classified as suitable may be reclassified as surplus because of physical damage such as fire, flood, sheet erosion or falling water table; or change in economic conditions such as the rising cost of production inputs, viable market outlets and obsolescence, which affect its suitability for program purposes. In addition, suitable farm property that is not sold to a family-size farm operator, including beginning farmers or ranchers, within 12 months from the date of the first advertisement pursuant to § 1955.107(a) of subpart C of this part will be reclassified surplus. If the property is offered for sale as surplus and the purchaser is eligible for Agency assistance, it may be reclassified by the Agency as suitable, if it is in fact suitable for program purposes.

(b) Grouping and subdividing farm properties larger than family-size. The Agency will subdivide farm properties larger than family-size whenever possible into parcels for the purpose of creating one or more suitable farm properties. Such land shall be subdivided into parcels of land the shape and size of which are suitable for farming, the value of which shall not exceed the insured farm ownership loan limit of $200,000. The Agency may also group two or more individual properties into one or more suitable farm properties.

* * * * *

4. Section 1955.64 is removed and reserved.

5. Section 1955.66 is amended by removing and reserving paragraphs (i), (k)(1), and (l) through (o), and in the third sentence of paragraph (j) by revising the reference ''FmHA or its successor agency under Public Law 103–354 Instruction 1955–D (available in any Agency FmHA or its successor agency under Public Law 103–354 office)'' to read ''subpart B of part 1924 of this chapter.''

6. Section 1955.72 is amended by revising the reference to ''FmHA or its successor agency under Public Law 103–354'' in the heading and paragraphs (a) and (b) to read ''the Agency.''

7. Section 1955.80 is removed and reserved.

Subpart C—Disposal of Inventory Property

8. Section 1955.107 is amended by revising the references to ''FmHA or its successor agency under Public Law 103–354'' in the first sentence of the introductory text, in paragraph (d)(3), and in paragraph (f)(1)(v) to read ''Agency;'' by removing and reserving paragraphs (b), (d)(1), (d)(2), and (d)(6); by revising the references to ''County Committee'' in the second sentence of paragraph (f) introductory text and in paragraphs (f)(2) and (f)(3) to read ''Agency;'' by removing the words '', as determined by the County Committee'' in the introductory text of paragraph (f)(1); and by revising paragraph (a) to read as follows:

§ 1955.107 Sale of suitable property (CONACT).

* * * * *

(a) *Sale by the Agency.* The Agency will advertise suitable property for sale or lease. Tribal Councils or other recognized Indian governing bodies having jurisdiction over Indian reservations as defined in 1955.103 of this subpart, however, will be responsible for notifying those parties listed in 1955.66(d)(2) of subpart B of this part.

* * * * *

9. Section 1955.108 is amended by removing the phrase ''by the County Committee'' in the fifth sentence.

10. Section 1955.109 is amended by revising the reference in the third sentence of paragraph (a) to ''Farmer Programs'' to read ''Farm Credit Programs;'' by revising the reference in paragraph (c) to ''FmHA or its successor agency under Public Law 103–354'' to read ''the Agency;'' by removing and reserving paragraphs (b), (d), (e), and (i), and by removing the last sentence in paragraph (g).

11. Section 1955.137 is amended by removing and reserving paragraphs (c) and (h); by removing the first three sentences in paragraph (b)(7); by revising the references to ''FmHA or its successor agency under Public Law 103–354'' the first time it appears in the first sentence of paragraph (b)(1)(iii), the introductory text of paragraph (b)(2), the second sentence of paragraph (b)(6), the first and ninth sentences of paragraph (d), and paragraphs (e)(1), (e)(1)(ii), (e)(2) and (e)(4) to read ''Agency''; by removing the references to ''FmHA or its successor agency under Public Law 103–354'' the second time it appears in the first sentence of paragraph (b)(1)(ii), and the second sentence of paragraph (b)(1)(iii); by revising the reference to ''SCS'' in the fourth sentence of paragraph (b)(1)(iii) to read ''NRCS;'' and by amending the heading of paragraph (d) to revise the phrase ''and/or'' to read ''or.''

12. Section 1955.140 is amended in the first sentence of paragraph (a) by revising ''Farmer Programs'' to read ''Farm Credit Programs property;'' by removing in the third sentence of paragraph (a) and in paragraph (b) the words '', based on the recommendations of the County Committee,''; and by revising ''FmHA or its successor agency under Public Law 103–354'' to read ''Agency's'' in the ninth sentence of paragraph (a).

13. Section 1955.141 is amended by removing and reserving paragraphs (a) through (c).

14. Sections 1955.142 and 1955.143 are removed and reserved.

15. Section 1955.144 is amended by removing the second through the fourth sentences.

Dated: May 22, 1995.

Michael V. Dunn,

Acting Under Secretary for Rural Economic and Community Development.

Dated: May 22, 1995.

Eugene Moss,

Under Secretary for Farm and Foreign Agriculture Services.

[FR Doc. 95–15818 Filed 6–30–95; 8:45 am]

BILLING CODE 3410–07–U

Office of Operations

7 CFR Part 2812

Department of Agriculture Guidelines for the Donation of Excess Research Equipment

AGENCY: Office of Operations, USDA.

ACTION: Final rule.

SUMMARY: The final rule sets forth uniform procedures for the donation of excess research equipment to educational institutions and nonprofit organizations for the conduct of technical and scientific education and research activities as authorized by section 11(i) of the Stevenson/Wydler Technology Act (Pub. L. No. 102–245), 15 U.S.C. 3710(i). This document includes not only the Department of Agriculture (USDA) procedures to implement 15 U.S.C. 3710(i), but also draws upon the General Services Administration (GSA) regulations concerning the disposal of excess personal property. This rule will allow the Department of Agriculture to donate excess research equipment to educational institutions and nonprofit organizations for the conduct of technical and scientific education and research activities.

EFFECTIVE DATE: August 2, 1995.

FOR FURTHER INFORMATION CONTACT: Denise R. Patterson, Acting Division Chief, Personal Property Management Division on (202) 720–3141.

SUPPLEMENTARY INFORMATION: The proposed rule was published in the **Federal Register** on May 13, 1994 (59 FR 24973). During the final rulemaking process, the rule was determined not significant for purposes of Executive Order 12866 and therefore has not been reviewed by OMB.

Two comments were received. The National Aeronautics and Space Administration (NASA) requested that the property be reutilized within the federal government before being distributed. The rule does allow agencies within USDA the opportunity to obtain excess research equipment during the 30 to 45 days that the property remains in the excess system. It is only after no USDA agency requests the equipment that it is available for donation to an eligible institution. USDA believes that making the equipment more widely available within the Government prior to donation would undermine the purpose of 15 U.S.C. 3710(i), which is to improve science education in the United States thereby advancing American competitiveness. The other comment was from the General Services Administration (GSA). It recommended that the Department of Agriculture target educational institutions located in economically disadvantaged rural and urban cities. USDA believes that targeting educational institutions located in economically disadvantaged rural and urban cities would improve science education in these locations. However, USDA believes that the purpose of this provision can best be achieved by not limiting the donation of excess research equipment. Accordingly, no changes other than some minor corrections have been made to the final rule.

A revision of the ''Classification Section'' was made because it contained information not pertinent to the rule.

Paperwork Reduction

Except for the Gift/Acceptance Agreement contained in appendix A to part 2812, the forms necessary to implement these procedures have been cleared by the Office of Management and Budget (OMB) in accordance with the Paperwork Reduction Act, 44 U.S.C. 3500 *et seq.* The Gift/Acceptance Agreement has been submitted to OMB for clearance under the Paperwork Reduction Act.

Classification

This rule has been determined to be not significant for purposes of Executive Order 12866 and therefore has not been reviewed by OMB.

Regulatory Analysis

Not required for this rulemaking.

Environmental Impact Statement

This proposed rule does not significantly affect the environment. Therefore, an environmental impact statement is not required under the National Environmental Policy Act of 1969, as amended, 42 U.S.C. 4321 *et seq.*

Catalog Federal Domestic Assistance

Not required for this rulemaking.

List of Subjects in 7 CFR Part 2812

Government property, Government property management, Excess government property.

Done at Washington, DC, this 26th 1995.

Dan Glickman,

Secretary.

For the reasons set forth in the preamble, part 2812 is added to chapter XXVIII of title 7 of the Code of Federal Regulations to read as follows:

PART 2812—DEPARTMENT OF AGRICULTURE GUIDELINES FOR THE DONATION OF EXCESS RESEARCH EQUIPMENT UNDER 15 U.S.C. 3710(i)

Sec.
2812.1 Purpose.
2812.2 Eligibility.
2812.3 Definitions.
2812.4 Procedures.
2812.5 Restrictions.
2812.6 Title.
2812.7 Costs.
2812.8 Accountability and recordkeeping.
2812.9 Disposal.
2812.10 Liabilities and losses.
Appendix A to Part 2812—Gift/Acceptance Agreement: Educational Institution or Nonprofit Organization and the United States Department of Agriculture

Authority: 5 U.S.C. 301.

§ 2812.01 Purpose.

This part sets forth the procedures to be utilized by USDA agencies and laboratories in the donation of excess research equipment to educational institutions and non-profit organizations for the conduct of technical and scientific education and research activities as authorized by 15 U.S.C. 3710(i). Title to excess research equipment donated pursuant to 15 U.S.C. 3710(i), shall pass to the donee.

§ 2812.2 Eligibility.

Eligible organizations are educational institutions or non-profit organizations involved in the conduct of technical and scientific educational and research activities.

§ 2812.3 Definitions.

(a) *Cannibalization*—The dismantling of equipment for parts to repair or enhance other equipment. The residual is reported for disposal. Cannibalization is only authorized if the property value is greater when cannibalized than retention in the original condition.

(b) *Education-related Federal equipment*—Equipment that is appropriate for educational purposes.

(c) *Excess personal property*—Items of personal property no longer required by the controlling Federal agency.

(d) *Research equipment*—Federal property determined to be essential to

conduct scientific or technical educational research.

(e) *Technical and scientific education and research activities*—Non-profit tax exempt public educational institutions or government sponsored research organizations which serve to conduct technical and scientific education and research.

§ 2812.4 Procedures.

(a) Prior to receipt of excess personal property/equipment under this part, the donee shall enter into a gift/acceptance agreement with the donor agency. A copy of that agreement is attached as appendix A to this part.

(b) Each agency head will designate in writing an authorized official to approve donations of excess property/equipment under this part.

(c) Property targeted for donation under this part will first be screened as excess by USDA agencies through the Departmental Excess Personal Property Coordinator (DEPPC) using the PMIS/PROP system.

(d) Upon reporting property for excess screening, if the pertinent USDA agency has an eligible organization in mind for donation under this part, enter ''P.L. 102–245'' in the note field. The property will remain in the excess system approximately 30–45 days and, if no agency in USDA requests it during the excess cycle, DEPPC will send the agency a copy of the excess report stamped ''DONATION AUTHORITY TO THE HOLDING AGENCY IN ACCORDANCE WITH P.L. 102–245.''

(e) Donations under this Part will be accomplished by preparing a Standard Form (SF) 122, ''Transfer Order-Excess Personal Property'' and a written justification statement (submitted by the recipient) explaining why the property is needed.

(f) The SF–122 should be signed by both an authorized official of the agency and the Agency Property Management Officer. The following information should also be provided.

(1) Name and address of Donee Institution (Ship to)

(2) Agency name and address (holding Agency)

(3) Location of property

(4) Shipping instructions (Donee contact person)

(5) Complete description of property, including acquisition amount, serial no., condition code, quantity, and agency order no.

(6) This statement needs to be added following property descriptions. ''The property requested hereon is certified to be used for the conduct of technical and scientific education and research activities. This donation is pursuant to the provisions of Pub. L. 102–245.''

(g) Once the excess personal property/equipment is physically received, the donee is required to immediately return a copy of the SF–122 to the donating agency indicating receipt of requested items. Cancellations should be reported to DEPPC so the property can be reported to the General Services Administration (GSA).

Note: The USDA agency shall send an informational copy of the transaction to GSA.

§ 2812.5 Restrictions.

(a) The authorized official (see § 2812.4(b)) will approve the donation of excess personal property/equipment in the following groups to educational institutions or nonprofit organizations for the conduct of technical and scientific educational and research activities.

ELIGIBLE GROUPS

FSC group	Name
19	Ships, Small Craft, Pontoons, and Floating Docks.
23	Vehicles, Trailers and Cycles.
24	Tractors.
37	Agricultural Machinery and Equipment.
43	Pumps, Compressors.
48	Valves.
58	Communication, Detection, and Coherent Radiation Equipment.
59	Electrical and Electronic Equipment Components.
65	Medical, Dental, and Veterinary Equipment and Supplies.
66	Instruments and Laboratory Equipment.
67	Photographic Equipment.
68	Chemicals and Chemical Products.
70	General Purpose Automatic Data Processing Equipment, Software Supplies, and Support Equipment.
74	Office Machines and Visible Record Equipment.

Note: Requests for items in FSC Groups or Classes other than the above should be referred to the agency head for consideration and approval.

(b) Excess personal property/equipment may be donated for cannibalization purposes, provided the donee submits a supporting statement which clearly indicates that cannibalizing the requested property for secondary use has greater potential benefit than utilization of the item in its existing form.

§ 2812.6 Title.

Title to excess personal property/equipment donated under this Part will automatically pass to the donee once the sponsoring agency receives the SF–122 indicating that the donee has received the property.

§ 2812.7 Costs.

Donated excess personal property/equipment is free of charge. However, the donee must pay all costs associated with packaging and transportation, unless the sponsoring agency has made other arrangements. The donee should specify the method of shipment.

§ 2812.8 Accountability and recordkeeping.

USDA requires that property requested by a donee be placed into use by the donee within a year of receipt and used for at least 1 year thereafter. Donees must maintain accountable records for such property during this time period.

§ 2812.9 Disposal.

When the property is no longer needed by the donee, it may be used in support of other Federal projects or sold and the proceeds used for technical and scientific education and research activities.

§ 2812.10 Liabilities and losses.

USDA assumes no liability with respect to accidents, bodily injury, illness, or any other damages or loss related to excess personal property/equipment donated under this part. The donee is advised to insure or otherwise protect itself and others as appropriate.

Appendix A to Part 2812—Gift/Acceptance Agreement; Educational Institution or NonProfit Organization and The United States Department of Agriculture

Gift/Acceptance Agreement (Agreement) between (USDA Agency) and (Educational Institution or NonProfit Organizations).

(1) *Purpose.* The purpose of the Agreement is to establish a relationship between the U.S. Department of Agriculture (USDA Agency) and (Educational Institution or NonProfit Organization) concerning the transfer of excess research equipment to this educational institution or nonprofit organization for the conduct of technical and scientific education and research activities. Title of ownership transfers to the recipient.

(2) *Authority.* Pub. L. 102–245, Sec. 303, amended, Section 11 of the Stevenson-Wydler Technology Innovation Act of 1980, by adding subsection (i), Research Equipment, which provides that ''the Director of the laboratory, or the head of any Federal agency or department, may give research equipment that is excess to the needs of the laboratory, agency, or department to an educational institution or non-profit organization for the conduct of technical and scientific education and research activities.''

(3) *Objectives and program elements.* This Agreement is intended to provide a

mechanism for the transfer of excess research equipment from USDA to the (Educational Institution or Nonprofit Organization) in accordance with the procedures set out in the regulations implementing Pub. L. 102–245.

(4) *Management.* In order to enable close collaboration, it is agreed that the (Educational Institution or NonProfit Organization) will provide to (USDA Agency) an annual inventory listing of property acquired under Pub. L. 102–245.

The (USDA Agency) and (Educational Institution or NonProfit Organization) will each identify a coordinator to implement this Agreement. These coordinators shall meet when necessary to review new Federal property regulations.

The coordinators shall seek to resolve any disputes concerning the Agreement through good faith discussions.

(5) *Effective date and revision or termination.* The Agreement shall enter into effect upon signature and shall remain in effect for 3 years. It may be extended or amended by written agreement of the parties at any time prior to its expiration or termination. The Agreement may be terminated at any time upon 60 days written notice by either party to the other. The termination of the Agreement shall not affect the validity of any property transactions under the Agreement which were initiated prior to such termination.

Property Coordinators

The property coordinators for this Agreement are:

Name _____
(Educational Institution/NonProfit Organization)

_____
(Complete Address and Phone Number)

Name _____
(USDA Coordinator)

_____
(Complete Address and Phone Number)

Approved:

_____
(Educational Institution/NonProfit Organization)

_____
Date

_____
(USDA Agency Head)

_____
Date

[FR Doc. 95–16285 Filed 6–30–95; 8:45 am]

BILLING CODE 3410–01–M

COMMODITY FUTURES TRADING COMMISSION

17 CFR Part 30

Foreign Option Transactions

AGENCY: Commodity Futures Trading Commission.

ACTION: Order.

SUMMARY: The Commodity Futures Trading Commission (Commission) is issuing this Order pursuant to which option contracts on a spot foreign exchange operation between the Great Britain Pound and the Deutsche Mark (GBP/DEM) and the Deutsche Mark and the Italian Lira (DEM/ITL) traded on the Marche a Terme International de France (MATIF) may be offered or sold to persons located in the United States. This Order is issued pursuant to: (1) Commission rule 30.3(a), 17 CFR 30.3(a), which makes it unlawful for any person to engage in the offer or sale of a foreign option product until the Commission, by order, authorizes such foreign option to be offered or sold in the United States; and (2) the procedures established in the Commission's Order issued on June 6, 1990, 55 FR 23902 (June 13, 1990) (Mutual Recognition Memorandum of Understanding (MRMOU) with the French Commission des Operations de Bourse).

EFFECTIVE DATE: August 2, 1995.

FOR FURTHER INFORMATION CONTACT: Francey L. Youngberg, Esq., Division of Trading and Markets, Commodity Futures Trading Commission, 2033 K Street NW., Washington, D.C. 20581. Telephone: (202) 254–8955

SUPPLEMENTARY INFORMATION: The Commission has issued the following Order:

UNITED STATES OF AMERICA

BEFORE THE

COMMODITY FUTURES TRADING COMMISSION

Order Pursuant to the Mutual Recognition Memorandum of Understanding with the French Commission des Operations de Bourse and Rule 30.3(a) Permitting Option Contracts on the GBP/DEM and DEM/ITL Traded on the Marche a Terme International de France (MATIF) To Be Offered or Sold to Persons Located in the United States Thirty Days After Publication of This Notice in the Federal Register Absent Further Notice

By Order issued on December 17, 1991 (Initial Order),[1] the Commission authorized, pursuant to the Mutual Recognition Memorandum of Understanding (MRMOU)[2] and Commission rule 30.3(a),[3] certain option products traded on the MATIF to be offered or sold in the United States.

By letter dated May 17, 1995, MATIF notified the Commission that on May 22, 1995 it would be introducing option contracts based on the GBP/DEM and DEM/ITL and requested that the Commission supplement its Initial Order authorizing the offer and sale in the United States of Options on the Notional Bond, the 3-month PIBOR, the 3-month EURODEM Futures Contracts; a Supplemental Order, 57 FR 10987 (April 1, 1992), authorizing the offer and sale in the United States of Options on the Long-Term ECU Bond Futures Contracts; and a Supplemental Order, 59 FR 22971 (May 4, 1994), authorizing the offer and sale in the United States of Options on the USD/DM and USD/FRF by also authorizing the MATIF's Option Contracts on the GBP/DEM and DEM/ITL to be offered or sold to persons located in the United States.[4] Based upon the foregoing, and pursuant to the terms of the MRMOU, the Commission hereby publishes this Order in the **Federal Register** pursuant to which the particular option contracts specified herein may be offered or sold thirty days after the publication of this Order.

Accordingly, pursuant to Commission rule 30.3(a), 17 CFR 30.3(a), and Article II, paragraph 6(b) and Article V, paragraph 6 of the MRMOU signed by the Commission on June 6, 1990 (55 FR 23902 (June 13, 1990)), and subject to the terms and conditions specified in the MRMOU, the Commission hereby issues this Order pursuant to which option contracts based on the GBP/DEM and DEM/ITL traded on the MATIF may be offered or sold to persons located in the United States thirty days after publication of this Order in the **Federal Register**, unless prior to that date the Commission receives any comments which may result in a determination to delay the effective date of the Order pending review of such comments. Under such circumstances the Commission will provide notice.

Contract Specifications

GBP/DEM Option (SDM)

Type
  European style
Underlying Interest
  Spot currency transaction GBP against DEM
Contract Size
  GBP 50,000

[1] See 56 FR 66345 (December 23, 1991).

[2] See 55 FR 23902 (June 13, 1990). Among other things, this arrangement provides a mechanism pursuant to which certain option products traded on the Marche a Terme International de France (MATIF) may be offered or sold to customers resident in the United States thirty days after publication in the Federal Register of a notice specifying the particular option contracts to be offered or sold.

[3] Commission rule 30.3(a), 17 CFR 30.3(a), makes it unlawful for any person to engage in the offer or sale of a foreign option product until the Commission, by order, authorizes such foreign option to be offered or sold in the United States.

[4] *See* letter dated May 17, 1995 from Patrick Stephan, MATIF, to Jane C. Kang, Commission and letter dated May 23, 1995 from Frederic Perier, Commission des Operations de Bourse, to Andrea M. Corcoran, Commission.

Strike Price
Expressed in DEM, with 2 decimals.
Strike price intervals: 2 Pfennigs (2.32–2.34)
At least 11 closest-to-the-money (5 on each side)
Quotation
Premium in % of the GBP nominal, with 2 decimals.
Ex: 0.45% stands for 0.45 x 500 = GBP 225
In specific cases, premium with 3 decimals
Tick
Size: 0.01%
Value: 0.01 x 500 = GBP 5
Expiration
3 monthly + 3 quarterly expirations from March (H), June (M), September (U), December (Z)
Last Trading Day
Thursday following the 3rd Wednesday of expiration month at 9:00 am (New York time)
First Trading Day
First business day following an expiration date
Exercise
After settlement of a spot-fixing on the expiration date, automatic exercise of in-the-money options
Exercise: exchange of underlying currencies
Trading Hours
Open outcry: 9:15 am to 5:00 pm (Paris time)
THS (after hours trading): 5:00 pm to 9:15 am

DEM/ITL Option (MLI)

Type
European style
Underlying Interest
Spot currency transaction DEM against ITL
Contract Size
DEM 100,000
Strike Price
Expressed in ITL, without decimal.
Strike price intervals: Liras 10 (1070–1080)
At least 11 closest-to-the-money (5 on each side)
Quotation
Premium in % of the DEM nominal, with 2 decimals.
Ex: 0.45% stands for 100,000 x 0.45/100 = DEM 450
In specific cases, premium with 3 decimals
Tick
Size: 0.01%
Value: 0.01/100 x 100,000 = DEM 10
Expiration
3 monthly + 3 quarterly expirations from March (H), June (M), September (U), December (Z)
Last Trading Day
Thursday following the 3rd Wednesday of expiration month at 9:00 am (New York time)
First Trading Day
First business day following an expiration date
Exercise
After settlement of a spot-fixing on the expiration date, automatic exercise of in-the-money options
Exercise: exchange of underlying currencies
Trading Hours
Open outcry: 9:15 am to 5:00 pm (Paris time)
THS (after hours trading): 5:00 pm to 9:15 am

List of Subjects in 17 CFR Part 30

Commodity futures, Commodity options, Foreign transactions.

Accordingly, 17 CFR Part 30 is amended as set forth below:

PART 30—FOREIGN FUTURES AND FOREIGN OPTION TRANSACTIONS

1. The authority citation for Part 30 continues to read as follows:

Authority: Secs. 2(a)(1)(A), 4, 4c, and 8a of the Commodity Exchange Act, 7 U.S.C. 2, 6, 6c and 12a.

2. Appendix B to Part 30 is amended by adding the following entry after the existing entries for the ''Marche a Terme International de France'' to read as follows:

APPENDIX B.—OPTION CONTRACTS PERMITTED TO BE OFFERED OR SOLD IN THE U.S. PURSUANT TO § 30.3(A)

Exchange	Type of contract	FR date and citation
* *	*	* *
Marche a Terme International de France.	Option Contracts on Great Britain Pound and the Deutsche Mark (GBP/DEM) and the Deutsche Mark and Italian Lira (DEM/ITL).	July 3, 1995; xx FR xx
* *	*	* *

Issued in Washington, D.C. on June 27, 1995.

Jean A. Webb,

Secretary to the Commission.

[FR Doc. 95–16230 Filed 6–30–95; 8:45 am]

BILLING CODE 6351–01–P

DEPARTMENT OF HEALTH AND HUMAN SERVICES

Food and Drug Administration

21 CFR Part 102

[Docket No. 92P–0476]

Crabmeat; Amendment of Common or Usual Name Regulation

AGENCY: Food and Drug Administration, HHS.

ACTION: Final rule.

SUMMARY: The Food and Drug Administration (FDA) is amending the common or usual name regulation for crabmeat by adding ''Brown King crabmeat'' as the common or usual name for the species *Lithodes aequispina*. This amendment is in response to a citizen petition submitted by the Alaska Seafood Marketing Institute (ASMI).

EFFECTIVE DATE: August 2, 1995.

FOR FURTHER INFORMATION CONTACT: Spring C. Randolph, Office of Seafood (HFS–416), Food and Drug Administration, 200 C St. SW., Washington, DC 20204, 202–418–3160.

SUPPLEMENTARY INFORMATION:

I. Background

In the **Federal Register** of July 15, 1994 (59 FR 36103), FDA proposed to amend the common or usual name provisions for crabmeat, (§ 102.50 (21 CFR 102.50)), to provide that the common or usual name of crabmeat derived from the species *L. aequispina* is ''Brown King crabmeat.'' The proposal was issued in response to a citizen petition submitted by ASMI. Previous to this rulemaking, § 102.50 provided that only the crabmeat from three species of the genus *Paralithodes* may be labeled as ''King crabmeat.'' Interested persons were given until September 13, 1994, to submit comments.

II. Comments

FDA received one comment in response to the proposed amendment. That comment, submitted by a trade association supported the proposal and stated that establishing ''Brown King crabmeat'' as the common or usual name for the crabmeat will benefit

consumers by providing a consistent statement of identity for *L. aequispina*.

III. Conclusion

For reasons stated in the proposal and in the absence of comments objecting to the proposed amendment, FDA concludes that it is appropriate to revise § 102.50 by adding ''Brown King crabmeat'' as the common or usual name for the meat of *L. aequispina*. FDA notes that under section 403(b) and (i)(1) of the Federal Food, Drug, and Cosmetic Act (the act) (21 U.S.C. 343(b) and (i)(1)) and § 101.3 (b) (1) (21 CFR 101.3 (b)(1)), a food with a common or usual name established by regulation is misbranded if it is not identified by that name.

FDA is also making a minor revision in § 102.50, that is separate from this rulemaking. After publication of the proposal, the agency became aware that a change had been made in the accepted scientific designation for the species listed therein as *Paralithodes camtschatica*, and that it had not revised the regulation to reflect this change. Therefore, to maintain consistency with currently accepted scientific nomenclature, FDA is changing the spelling of the name of this species in § 102.50, to read *Paralithodes camtschaticus* (see American Fisheries Society Special Publication 17, ''Common and Scientific Names of Aquatic Invertebrates from the United States and Canada: Decapod Crustaceans'').

IV. Environmental Impact

The agency has previously considered the environmental effects of this rule as announced in the proposed rule of July 15, 1994 (59 FR 36103). No new information or comments have been received that would affect the agency's previous determination that there is no significant impact on the human environment and that an environmental impact statement is not required.

V. Analysis of Impacts

FDA has examined the impacts of the final rule under Executive Order 12866 and the Regulatory Flexibility Act (Pub. L. 96–354). Executive Order 12866 directs agencies to assess all costs and benefits of available regulatory alternatives and, when regulation is necessary, to select regulatory approaches that maximize net benefits (including potential economic, environmental, public health and safety, and other advantages; distributive impacts; and equity). The agency believes that this final rule is consistent with the regulatory philosophy and principles identified in the Executive Order. In addition, the final rule is not a significant regulatory action as defined by the Executive Order and so is not subject to review under the Executive Order.

The Regulatory Flexibility Act requires agencies to analyze regulatory options that would minimize any significant impact of a rule on small entities. Because FDA did not receive any comments or new information on this issue, the agency certifies that the final rule will not have a significant economic impact on a substantial number of small entities. Therefore, under the Regulatory Flexibility Act, no further analysis is required.

List of subjects in 21 CFR Part 102

Beverages, Food grades and standards, Food labeling, Frozen foods, Oils and fats, Onions, Potatoes, Seafood.

Therefore, under the Federal Food, Drug, and Cosmetic Act and under authority delegated to the Commissioner of Food and Drugs, 21 CFR part 102 is amended as follows:

PART 102—COMMON OR USUAL NAME FOR NONSTANDARDIZED FOODS

1. The authority citation for 21 CFR part 102 continues to read as follows:

Authority: Secs. 201, 403, 701 of the Federal Food, Drug, andCosmetic Act (21 U.S.C 321, 343, 371).

2. Section 102.50 is amended by revising the table to read as follows:

§ 102.50 Crabmeat.

* * * * *

Scientific name of crab	Common or usual name of crabmeat
Chionoecetes opilio, *Chionoecetes tanneri*, *Chionoecetes bairdii, and* *Chionoecetes angulatus*,	Snow crabmeat.
Erimacrus isenbeckii	Korean variety crabmeat or Kegani crabmeat.
Lithodes aequispina	Brown King crabmeat.
Paralithodes brevipes	King crabmeat or Hanasaki crabmeat.
Paralithodes camtschaticus	King crabmeat. and Paralithodes Platypus.

Dated: June 26, 1995.

William B. Schultz,

Deputy Commissioner for Policy.

[FR Doc. 95–16207 Filed 6–30–95; 8:45 am]

BILLING CODE 4160–01–F

---

21 CFR Part 558

New Animal Drugs For Use In Animal Feeds; Decoquinate; Technical Amendment

AGENCY: Food and Drug Administration, HHS.

ACTION: Final rule; technical amendment.

SUMMARY: The Food and Drug Administration (FDA) is amending the animal drug regulations to clarify the conditions of use in the approved new animal drug application (NADA) for Type C decoquinate cattle feed. This amendment was requested by the sponsor, Rhone-Poulenc, Inc.

EFFECTIVE DATE: July 3, 1995.

FOR FURTHER INFORMATION CONTACT: Naba K. Das, Center for Veterinary Medicine (HFV–133), Food and Drug Administration, 7500 Standish Pl., Rockville, MD 20855, 301–594–1644.

SUPPLEMENTARY INFORMATION: In the **Federal Register** of December 3, 1976 (41 FR 53002), FDA published a document reflecting approval of supplemental NADA 39–417V filed by Hess and Clark, Division of Rhodia, Inc., Ashland, OH, proposing safe and effective use of a 6 percent decoquinate premix for manufacturing a cattle feed used as an aid in the prevention of coccidiosis. The supplemental NADA amended § 558.195(g)(2) (21 CFR 558.195(g)(2)) in the table to reflect the approval.

In the **Federal Register** of September 30, 1986, FDA published a document reflecting a change of sponsor of NADA 39–417 Deccox® (decoquinate) from Hess & Clark, Inc., to Rhone Poulenc, Inc. The new sponsor of decoquinate, Rhone-Poulenc, Inc., P.O. Box 125, Black Horse Lane, Monmouth Junction, NJ 08852, informed FDA that the regulation for use of Type C decoquinate cattle feed that reflects the conditions of use in its approved NADA were incorrect. Section 558.195(d) in the table in the entry for ''22.7 mg per 100 lb * * *'' provides the feeding level for the cattle feed. This information usually is provided in the ''Limitations'' column. The firm requested that the entry be revised to place the concentration of active ingredient in the ''Decoquinate in grams per ton'' column and the feeding level in the ''Limitations'' column. FDA concurs

with the firm's request and is amending the regulations accordingly. In addition, § 558.195(c)(2) provides status of this product for the National Academy of Sciences/National Research Council. The status is outdated based upon the Generic Animal Drug and Patent Term Restoration Act of 1988, therefore, § 558.195(c)(2) is removed and reserved.

List of Subjects in 21 CFR Part 558

Animal drugs, Animal feeds.

Therefore, under the Federal Food, Drug, and Cosmetic Act and under authority delegated to the Commissioner of Food and Drugs and redelegated to the Center for Veterinary Medicine, 21 CFR part 558 is amended as follows:

PART 558—NEW ANIMAL DRUGS FOR USE IN ANIMAL FEEDS

1. The authority citation for 21 CFR part 558 continues to read as follows:

Authority: Secs. 512, 701 of the Federal Food, Drug, and Cosmetic Act (21 U.S.C. 360b, 371).

2. Section 558.195 is amended by removing and reserving paragraph (c)(2), and in the table in paragraph (d) by removing the entry for ''22.7 mg per 100 lb of body weight per day (0.5 mg per kilogram)'' and adding a new entry in numerical order to read as follows:

§ 558.195 Decoquinate.

* * * * *

(d) * * *

Decoquinate in grams per ton	Combination in grams per ton	Indications for use	Limitations	Sponsor
13.6 to 27.2 (0.0015 to 0.003 pct).	.....	Cattle; for the prevention of coccidiosis in ruminating and nonruminating calves and cattle caused by *Eimeria bovis* and *E. zumii*.	Feed Type C feed at a rate to provide 22.7 mg per 100 lb of body weight (0.5 mg per kg) per day. May be prepared from dry or liquid Type B feed containing 0.0125 to 0.5 pct decoquinate. Liquid Type B feed must have a pH range of 5.0 to 6.5 and contain a suspending agent to maintain a viscosity of not less tha 500 centipoises. Feed at least 28 days during periods of exposure to coccidiosis or when it is likely to be a hazard. Do not feed to cows producing milk for food.	

Dated: June 23, 1995.

Andrew J. Beaulieau,

Acting Director, Office of New Animal Drug Evaluation, Center for Veterinary Medicine.

[FR Doc. 95–16091 Filed 6–30–95; 8:45 am]

BILLING CODE 4160–01–F

ENVIRONMENTAL PROTECTION AGENCY

40 CFR Part 81

[MN36–2–7085; FRL–5252–3]

Designation of Areas for Air Quality Planning Purposes; Minnesota

AGENCY: Environmental Protection Agency (USEPA).

ACTION: Final rule, correction.

SUMMARY: On May 31, 1995, the USEPA published a direct final rule approving the redesignation requests to attainment for particulate matter in the Rochester portion of Olmsted County and sulfur dioxide in the Air Quality Control Region 131 Twin Cities and Pine Bend areas (excluding the St. Paul Park area). The revised *Code of Federal Regulations (CFR)* § 81.324 redesignation table for sulfur dioxide identified the remaining nonattainment area as being part of Scott and Washington Counties. The table should have shown the remaining nonattainment area as being part of Dakota and Washington Counties. Also, the western boundary identifier of the Dakota County part of the nonattainment area is being corrected. The USEPA regrets any inconvenience these errors may have caused.

EFFECTIVE DATE: This correction rulemaking becomes effective on July 3, 1995.

FOR FURTHER INFORMATION CONTACT: Randy Robinson, Air Enforcement Branch, Regulation Development Section (AE–17J), United States Environmental Protection Agency, Region 5, Chicago, Illinois 60604, (312) 353–6713.

SUPPLEMENTARY INFORMATION:

List of Subjects in 40 CFR Part 81

Air pollution control, National parks, Wilderness areas.

Authority: 42 U.S.C. 7401–7671(q).

Dated: June 22, 1995.

David A. Ullrich,

Acting Regional Administrator.

Correction of Publication

Accordingly the direct final rule published on May 31, 1995, at 60 FR 28339 is corrected as follows:

In § 81.324, the amendment to the table ''Minnesota SO_2'' is corrected to read as follows:

§ 81.324 Minnesota.

* * * * *

MINNESOTA—SO_2

Designated area	Does not meet primary standards	Does not meet secondary standards	Cannot be classified	Better than national standards
AQCR 131:				
Anoka County				X
Carver County				X
Dakota County (part)	X			
The area bounded on the north by Interstate 494; on the west by Babcock Trail and Highway 55; on the south by a line from the intersection of Highway 52 and 56 east to the County Line; on the east by the County line				
Rest of Dakota County				X
Hennepin County				X
Ramsey County				X
Scott County				X
Washington County (part)	X			
The area bounded on the west by the County line; on the south by a line extending from the County line east to 100th Street; on the east by Jamaica Avenue; on the north by Military Road and Interstate 494.				
Rest of Washington County				X
* * * *	*	*		*

* * * * *

[FR Doc. 95–16275 Filed 6–30–95; 8:45 am]

BILLING CODE 6560–50–D

40 CFR Parts 704, 707, 712, 716, 720, 721, 723, 761, 763, 766, 790, 795, 796, 799

[OPPTS–00173; FRL–4964–5]

Technical Amendments to TSCA Regulations to Update Addresses

AGENCY: Environmental Protection Agency (EPA).

ACTION: Final Rule.

SUMMARY: EPA is issuing technical amendments to several regulations under the Toxic Substances Control Act (TSCA). These amendments revise the addresses for mailing information to, requesting information from, or otherwise contacting certain offices in the Office of Pollution Prevention and Toxics (OPPT). Additionally, this document makes technical amendments to certain information submission procedures that pertain to TSCA section 4 test rules and consent orders.

EFFECTIVE DATE: This final rule takes effect on July 3, 1995.

FOR FURTHER INFORMATION CONTACT: Susan B. Hazen, Director, Environmental Assistance Division (7408), Office of Pollution Prevention and Toxics, Environmental Protection Agency, 401 M St., SW., Washington, DC 20460, Telephone: (202) 554–1404, TDD: (554–0551); TSCA-Hotline@epamail.epa.gov.

SUPPLEMENTARY INFORMATION: This document makes technical amendments to certain TSCA regulations (40 CFR parts 700 to end). The technical amendments update the mailing addresses for submissions of information to, requesting information from, or otherwise contacting certain offices in OPPT. The addresses currently listed in the regulations have been changed and should no longer be used. Updating applicable addresses will ensure that OPPT receives all information requests and submissions in a timely manner.

Additionally, in order to centralize document receipt and to reduce burdens associated with the submission of information under TSCA section 4 test rules and consent orders, EPA is revising its section 4 procedural rules at 40 CFR Part 790 so that all documents and requests for actions be sent to the address published in 40 CFR 790.5(b). The current procedural rules require under § 790.5(d) that certain submissions and inquiries relating to test rules and consent orders be submitted to the Director of the Office of Compliance Monitoring (OCM). Some of these submissions are duplicative (e.g., the requirement at 40 CFR 790.5(d) to submit to OCM copies of transmittal memos accompanying material submitted to OPPT under § 790.5(b)). In addition, the responsibility to handle other, non-duplicative submissions, as well as questions, has been assigned to OPPT as the result of EPA streamlining and reorganization efforts that have eliminated OCM. Therefore, EPA is removing § 790.5(d) and references to that section. Where appropriate, EPA is replacing references to § 790.5(d) with references to § 790.5(b).

Because these are non-substantive procedural changes, notice and public comment are not necessary. These changes are effective immediately.

I. Rulemaking Record

EPA has established a record for this rulemaking (docket control number OPPTS–00173). A public version of the record, without any confidential business information is available in the Non-Confidential Information Center (NCIC) (7407), Office of Pollution Prevention and Toxics, U.S. Environmental Protection Agency, Room B–607 NEM, 401 M Street, SW., Washington, DC, 20460, between the hours of 12 p.m. and 4 p.m. weekdays excluding legal holidays.

II. Regulatory Assessment Requirements Analyses Under Executive Order 12866, the Unfunded Mandates Reform Act of 1995, the Regulatory Flexibility Act, and the Paperwork Reduction Act

Because this action is limited to intra-agency procedural changes, including updating addresses, consolidating addressees and eliminating unnecessary procedural duplication, there is no ''significant'' regulatory action within the meaning of Executive Order 12866 (58 FR 51735, October 4, 1993). In addition, this action does not impose any additional Federal mandates on State, local, or tribal governments or the private sector within the meaning of The Unfunded Mandates Reform Act of 1995. For these reasons, pursuant to the Regulatory Flexibility Act (5 U.S.C. 605(b)), I certify that this action would not have a significant economic impact

on a substantial number of small entities. In addition, because no substantive requirement in the procedural rule is being increased, this action does not affect the requirements under the Paperwork Reduction Act, 44 U.S.C. 3501.

List of Subjects

40 CFR Part 704, 707, 712, 716, 717, 720, 721, 723, 761, 763, 766, 790, 795, 796, 799

Administrative practice and procedure, Asbestos, Chemicals, Confidential business information, Dibenzo-para-dioxins/dibenzofurans, Environmental protection, Exports, Hazardous substances, Health Laboratories, Imports, Intergovernmental relations, Labeling, Occupational safety and health, Photographic industry, Polychlorinated biphenyls, Reporting and recordkeeping requirements, Schools.

Authority: 15 U.S.C. 2603

Dated: June 28, 1995.

Joseph A. Cotruvo,

Acting Director, Office of Pollution Prevention and Toxics.

Therefore, 40 CFR, chapter I, subchapter R, is amended as follows:

1. In part 704:

PART 704—[AMENDED]

a. The authority citation for part 704 continues to read as follows:

Authority: 15 U.S.C. 2607(a).

b. By revising § 704.9 to read as follows:

§ 704.9 Where to send reports.

Reports must be submitted by certified mail to the Document Control Office (7407), Office of Pollution Prevention and Toxics, U.S. Environmental Protection Agency, Room G–099, 401 M St., SW., Washington, DC., 20460, ATT: 8(a) Reporting.

c. By revising § 704.25(g) to read as follows:

§ 704.25 11-Aminoundecanoic acid.

* * * * *

(g) *Where to send reports.* Reports must be submitted by certified mail to the Document Control Office (7407), Office of Pollution Prevention and Toxics, U.S. Environmental Protection Agency, Room G–099, 401 M St., SW., Washington, DC., 20460, ATT: 11–AA Notification.

d. By revising § 704.30(e) to read as follows:

§ 704.30 Anthraquinone.

* * * * *

(e) *Where to send reports.* Reports must be submitted by certified mail to the Document Control Office (7407), Office of Pollution Prevention and Toxics, U.S. Environmental Protection Agency, Room G–099, 401 M St., SW., Washington, DC., 20460, ATTN: TSCA 8(a).

e. By revising § 704.104(g) to read as follows:

§ 704.104 Hexafluoropropylene oxide.

* * * * *

(g) *Where to send reports.* Reports must be submitted by certified mail to the Document Control Office (7407), Office of Pollution Prevention and Toxics, U.S. Environmental Protection Agency, Room G–099, 401 M St., SW., Washington, DC., 20460, ATTN: HFPO Reporting.

2. In part 707:

PART 707—[AMENDED]

a. The authority citation for part 707 continues to read as follows:

Authority: 15 U.S.C. 2611(b) and 2612.

b. In § 707.20 by revising paragraph (c)(3) to read as follows:

§ 707.20 Chemical substances import policy.

* * * * *

(c) * * *

(3) *EPA assistance.* Assistance in determining whether a chemical shipment is in compliance with TSCA can be obtained from the Director, Environmental Assistance Division (7408), Office of Pollution Prevention and Toxics, U.S. Environmental Protection Agency, Room E–543B, 401 M St., SW., Washington, DC, 20460, Telephone: (202) 554–1404, TDD: (202) 544–0551.

c. In § 707.65 by revising paragraph (c) to read as follows:

§ 707.65 Submission to agency.

* * * * *

(c) Notices shall be marked ''Section 12(b) Notice'' and sent to the Document Control Office (7407), Office of Pollution Prevention and Toxics, U.S. Environmental Protection Agency, Room G–099, 401 M St., SW., Washington, DC., 20460.

3. In part 712:

PART 712—[AMENDED]

a. The authority citation for part 712 continues to read as follows:

Authority: 15 U.S.C. 2607(a).

b. In § 712.28 by revising paragraph (c) to read as follows:

§ 712.28 Form and instructions.

* * * * *

(c) Forms must be sent (preferably by certified mail) to the Document Control Office (7407), Office of Pollution Prevention and Toxics, U.S. Environmental Protection Agency, Room G–099, 401 M St., SW., Washington, DC., 20460, ATTN: 8(a) PAIR Reporting.

c. In § 712.30 by revising the last sentence in paragraph (c) to read as follows:

§ 712.30 Chemical lists and reporting periods.

* * * * *

(c) * * * Any information submitted must be addressed to the Document Control Office (7407), Office of Pollution Prevention and Toxics, U.S. Environmental Protection Agency, Room G–099, 401 M St., SW., Washington, DC., 20460, ATTN: 8(a) Auto-ITC.

* * * * *

4. In part 716:

PART 716—[AMENDED]

a. The authority citation for part 716 continues to read as follows:

Authority: 15 U.S.C. 2607(d).

b. In § 716.30 by revising paragraph (c) to read as follows:

§ 716.30 Submission of copies of studies.

* * * * *

(c) Copies of health and safety studies and the accompanying cover letters must be submitted, preferably by certified mail, to the Document Control Office (7407), Office of Pollution Prevention and Toxics, U.S. Environmental Protection Agency, Room G–099, 401 M St., SW., Washington, DC., 20460, ATTN: 8(d) Health and Safety Reporting Rule (Notification/Reporting).

c. In § 716.35 by revising paragraph (c) to read as follows:

§ 716.35 Submission of lists of studies.

* * * * *

(c) Lists of health and safety studies should be submitted, preferably by certified mail, to the Document Control Office (7407), Office of Pollution Prevention and Toxics, U.S. Environmental Protection Agency, Room G–099, 401 M St., SW., Washington, DC., 20460, ATTN: 8(d) Health and Safety Reporting Rule (Notification Reporting).

d. In § 716.60 by revising the second sentence in paragraph (c) to read as follows:

§ 716.60 Reporting schedule.

* * * * *

(c) * * * Requests for extensions must be in writing and addressed to the Director, Office of Pollution Prevention and Toxics (7401), U.S. Environmental Protection Agency, Room E–539, 401 M St., SW., Washington, DC, 20460, ATTN: Section 8(d) extension. * * *

e. In § 716.105 by revising the last sentence in paragraph (c) to read as follows:

§ 716.105 Additions of substances and mixtures to which this subpart applies.

* * * * *

(c) * * * Persons who wish to submit information that shows why a chemical should be withdrawn must address their comments, in writing to the Document Control Office (7407), Office of Pollution Prevention and Toxics, U.S. Environmental Protection Agency, Room G–099, 401 M St., SW., Washington, DC., 20460, ATTN: 8(d) Auto-ITC.

5. In part 717:

PART 717—[AMENDED]

a. The authority citation for part 717 continues to read as follows:

Authority: 15 U.S.C. 2607(c).

b. In § 717.17 by revising paragraph (c) to read as follows:

§ 717.17 Inspection and reporting requirements.

* * * * *

(c) *How to report.* When required to report, firms must submit copies of records (preferably by certified mail) to the Document Control Office (7407), Office of Pollution Prevention and Toxics, U.S. Environmental Protection Agency, Room G–099, 401 M St., SW., Washington, DC., 20460, ATTN: 8(c) Allegations.

6. In part 720:

PART 720—[AMENDED]

a. The authority citation for part 720 continues to read as follows:

Authority: 15 U.S.C. 2607(a).

b. In § 720.75 by revising the first sentence in paragraph (b)(2) and the second sentence of paragraph (e)(1) to read as follows:

§ 720.75 Notice review period.

* * * * *

(b) * * *

(2) A request for suspension may be made in writing to the Document Control Office (7407), Office of Pollution Prevention and Toxics, U.S. Environmental Protection Agency, Room G–099, 401 M St., SW., Washington, DC., 20460. * * *

* * * * *

(e) * * * (1) * * * A statement of withdrawal must be made in writing to the Document Control Office (7407), Office of Pollution Prevention and Toxics, U.S. Environmental Protection Agency, Room G–099, 401 M St., SW., Washington, DC., 20460. * * *

c. In § 720.95 by revising the last sentence to read as follows:

§ 720.95 Public file.

* * * Any of the nonconfidential material described in this subpart will be available for public inspection in the Non-Confidential Information Center (NCIC) (7407), Office of Pollution Prevention and Toxics, U.S. Environmental Protection Agency, Room B–607 NEM, 401 M Street, SW., Washington, DC, 20460, between the hours of 12 p.m. and 4 p.m. weekdays excluding legal holidays.

d. In § 720.102 by revising paragraph (d) to read as follows:

§ 720.102 Notice of commencement of manufacture or import.

* * * * *

(d) *Where to submit.* Notices of commencement of manufacture or import should be submitted to the Document Control Office (7407), Office of Pollution Prevention and Toxics, U.S. Environmental Protection Agency, Room G–099, 401 M St., SW., Washington, DC., 20460.

7. In part 721:

PART 721—[AMENDED]

a. The authority citation for part 721 continues to read as follows:

Authority: 15 U.S.C. 2604, 2607, and 2625(c).

b. In § 721.5 by revising paragraph (d)(1)(iii) to read as follows:

§ 721.5 Persons who must report.

* * * * *

(d) * * *

(1) * * *

(iii) That the person has promptly provided EPA enforcement authorities with a copy of the recepient's statement of assurance described in paragraph (d)(1)(ii) of this section. The copy must be sent to the Office of Enforcement and Compliance Assurance, Office of Compliance (2224A), U.S. Environmental Protection Agency, Ariel Rios, 1200 Pennsylvania Ave., N.W., Washington, DC, 20044.

* * * * *

c. In § 721.11 by revising the introductory text of paragraph (b) to read as follows:

§ 721.11 Applicability determination when the specific chemical identity is confidential.

* * * * *

(b) To establish a *bona fide* intent to manufacture, import, or process a chemical substance, the person who intends to manufacture, import, or process the chemical substance must submit the following information in writing to the Document Control Office (7407), Office of Pollution Prevention and Toxics, U.S. Environmental Protection Agency, Room G–099, 401 M St., SW., Washington, DC., 20460, ATTN: SNUR Bonafide submissions.

d. In § 721.30 by revising the introductory text of paragraph (b) to read as follows:

§ 721.30 EPA approval of alternative control measures.

* * * * *

(b) A request for a determination of equivalency must be submitted in writing to the Document Control Office (7407), Office of Pollution Prevention and Toxics, U.S. Environmental Protection Agency, Room G–099, 401 M St., SW., Washington, DC., 20460; ATTN: SNUR Equivalency Determination, and must contain:

* * * * *

e. In § 721.185 by revising the second sentence of paragraph (b)(1) to read as follows:

§ 721.185 Limitation or revocation of certain notification requirements.

* * * * *

(b) * * *

(1) * * * All requests should be sent to the Document Control Office (7407), Office of Pollution Prevention and Toxics, U.S. Environmental Protection Agency, Room G–099, 401 M St., SW., Washington, DC., 20460. * * *

* * * * *

f. In § 721.4300 by revising paragraph (a)(2)(iv)(A)(*7*) to read as follows:

§ 721.4300 Hydrazinecarboxamide, N,N′-1,6-hexanediylbis [2,2-dimethyl-].

(a) * * *

(2) * * *

(iv) * * *

(A) * * *

(*7*) A request that the party notify the following office of any information which indicates that the in-stream concentration of the PMN substance specified in paragraph (a)(iv) of this section has been exceeded: Chief, New Chemicals Branch, Chemical Control Division (7405), Office of Pollution Prevention and Toxics, U.S. Environmental Protection Agency,

Room E–447, 401 M St., SW., Washington, DC, 20460.

* * * * *

8. In part 723:

PART 723—[AMENDED]

a. The authority citation for part 723 continues to read as follows:

Authority: 15 U.S.C. 2604

b. In § 723.50 by revising paragraph (n) to read as follows:

§ 723.50 Chemical substances manufactured in quantities of 1,000 kilograms or less per year.

* * * * *

(n) *Submission of information.* Information submitted to EPA under this section must be sent in writing to the Document Control Office (7407), Office of Pollution Prevention and Toxics, U.S. Environmental Protection Agency, Room G–099, 401 M St., SW., Washington, DC., 20460.

* * * * *

c. In § 723.175 by revising paragraph (i)(3) to read as follows:

§ 723.175 Chemical substances used in or for the manufacture or processing of instant photographic and peel-apart film articles.

* * * * *

(i) * * *

(3) *Address.* The exemption notice must be addressed to the Document Control Office (7407), Office of Pollution Prevention and Toxics, U.S. Environmental Protection Agency, Room G–099, 401 M St., SW., Washington, DC., 20460.

* * * * *

9. In part 761:

PART 761—[AMENDED]

a. The authority citation for part 761 continues to read as follows:

Authority: 15 U.S.C. 2605, 2607, 2611, 2614, and 2616.

b. In § 761.19 by revising the fourth sentence in paragraph (b) to read as follows:

§ 761.19 References.

* * * * *

(b) * * * Copies of the incorporated material may be obtained from the TSCA Non-Confidential Information Center (NCIC) (7407), Office of Pollution Prevention and Toxics, U.S. Environmental Protection Agency, Room B–607 NEM, 401 M Street, SW., Washington, DC, 20460, between the hours of 12 p.m. and 4 p.m. weekdays excluding legal holidays, or from the American Society for Testing and Merials (ASTM), 1916 Race Street, Philadelphia, PA 19103..

c. In § 761.20 by revising the second sentence of the introductory text of paragraph (c)(3) and by revising the first sentence of paragraph (c)(3)(vii) to read as follows:

§ 761.20 Prohibitions.

* * * * *

(c) * * *

(3) * * * Export notices must be submitted to the TSCA Document Control Office (7407), Office of Pollution Prevention and Toxics, U.S. Environmental Protection Agency, Room G–099, 401 M St., SW., Washington, DC., 20460. * * *

* * * * *

(vii) No less than 30 days after the end of each calendar quarter (March 31, June 30, September 30, and December 31) during which PCBs were exported for disposal, each person exporting the PCBs must submit a report to the Document Control Office (7407), Office of Pollution Prevention and Toxics, U.S. Environmental Protection Agency, Room G–099, 401 M St., SW., Washington, DC., 20460. * * *

* * * * *

d. In § 761.130 by revising the third sentence in paragraph (e) to read as follows:

§ 761.130 Sampling requirements.

* * * * *

(e) * * * Both the MRI sampling scheme and the guidance document are available from the Director, Environmental Assistance Division (7408), Office of Pollution Prevention and Toxics, U.S. Environmental Protection Agency, Room E–543B, 401 M St., SW., Washington, DC, 20460, Telephone: (202) 554–1404, TDD: (202) 544–0551. * * *

* * * * *

e. In § 761.185 by revising paragraph (f) to read as follows:

§ 761.185 Certification program and retention of records by importers and persons generating PCBs in excluded manufacturing processes.

* * * * *

(f) This report must be submitted to the Document Control Office (7407), Office of Pollution Prevention and Toxics, U.S. Environmental Protection Agency, Room G–099, 401 M St., SW., Washington, DC., 20460, ATTN: PCB Notification. This report must be submitted by October 1, 1984 or within 90 days of starting up processes or commencing importation of PCBs.

* * * * *

f. In § 761.187 by revising paragraph (d) to read as follows:

§ 761.187 Reporting by importers and by persons generating PCBs in excluded manufacturing processes.

* * * * *

(d) These reports must be submitted to the Document Control Office (7407), Office of Pollution Prevention and Toxics, U.S. Environmental Protection Agency, Room G–099, 401 M St., SW., Washington, DC., 20460, ATTN: PCB Notification.

* * * * *

10. In part 763:

PART 763—[AMENDED]

a. The authority citation for part 704 continues to read as follows:

Authority: 15 U.S.C. 2605 and 2607(c).

b. In § 763.71 by revising paragraph (d) to read as follows:

§ 763.71 Schedule for reporting.

* * * * *

(d) EPA Form 7710–36 and EPA Form 7710–37 can be obtained by writing or telephoning the Director, Environmental Assistance Division (7408), Office of Pollution Prevention and Toxics, U.S. Environmental Protection Agency, Room E–543B, 401 M St., SW., Washington, DC, 20460, Telephone: (202) 554–1404, TDD:(202) 544–0551.

* * * * *

§ 763.90 [Amended]

c. In § 763.90(i)(5) by removing the words ''EPA OPPTS Reading Room, Rm. G004 Northeast Mall, 401 M Sts., SW., Washington, DC 20460'' and adding in place thereof the words ''Non-Confidential Information Center (NCIC) (7407), Office of Pollution Prevention and Toxics, U.S. Environmental Protection Agency, Room B–607 NEM, 401 M Street, SW., Washington, DC, 20460, between the hours of 12 p.m. and 4 p.m. weekdays excluding legal holidays.''

c. In § 763.92 by revising paragraph (a)(2)(ii) to read as follows:

§ 763.92 Training and periodic surveillance.

(a) * * *

(2) * * *

(ii) Information on the use of respiratory protection as contained in the EPA/NIOSH *Guide to Respiratory Protection for the Asbestos Abatement Industry*, September 1986 (EPA 560/OPPTS–86–001), available from the Director, Environmental Assistance Division (7408), Office of Pollution Prevention and Toxics, U.S. Environmental Protection Agency, Room E–543B, 401 M St., SW., Washington, DC, 20460, Telephone:

(202) 554–1404, TDD: (202) 544–0551 and other personal protection measures.

* * * * *

d. In § 763.119 by revising the introductory text of paragraph (a) to read as follows:

§ 763.119 References.

(a) *General.* The following reference contains detailed information of sampling and analysis of friable materials and provides a background on which this part is based. Microfiche copies may be obtained from the Non-Confidential Information Center (NCIC) (7407), Office of Pollution Prevention and Toxics, U.S. Environmental Protection Agency, Room B–607 NEM, 401 M Street, SW., Washington, DC, 20460, between the hours of 12 p.m. and 4 p.m. weekdays excluding legal holidays.

* * * * *

11. In part 766:

PART 766—[AMENDED]

a. The authority citation for part 766 continues to read as follows:

Authority: 15 U.S.C. 2603 and 2607.

b. Section 766.12 is revised to read as follows:

§ 766.12 Testing guidelines.

Analytical test methods must be developed using methods equivalent to those described or reviewed in *Guidelines for the Determination of Polyhalogenated Dibenzo-p-dioxins and Dibenzofurans in Commercial Products.* Copies are available from the Director, Environmental Assistance Division (7408), Office of Pollution Prevention and Toxics, U.S.Environmental Protection Agency, Room E–543B, 401 M St., SW., Washington, DC, 20460, Telephone: (202) 554–1404, TDD: (202) 544–0551. Copies are also located in the public docket for this part (Docket No. OPPTS–83002) and are available for inspection in the Non-Confidential Information Center (NCIC) (7407), Office of Pollution Prevention and Toxics, U.S. Environmental Protection Agency, Room B–607 NEM, 401 M Street, SW., Washington, DC, 20460, between the hours of 12 p.m. and 4 p.m. weekdays excluding legal holidays.

12. In part 790:

PART 790—[AMENDED]

a. The authority citation for part 790 continues to read as follows:

Authority: 15 U.S.C. 2603.

b. Section 790.5 is amended by revising paragraph (b) and by removing paragraph (d) to read as follows:

§ 790.5 Submission of information.

* * * * *

(b) Submissions containing both confidential business information or non-confidential business information must be addressed to the Document Control Office (7407), Office of Pollution Prevention and Toxics, U.S. Environmental Protection Agency, Room G–099, 401 M St., SW., Washington, DC., 20460, ATTN: TSCA Section 4.

* * * * *

c. By revising § 790.50 (b)(1) to read as follows:

§ 790.50 Submission of study plans.

* * * * *

(b) *Extensions of time for submission of study plans.* (1) EPA may grant requests for additional time for the development of study plans on a case-by-case basis. Requests for additional time for study plan development must be made in writing to EPA at the address in § 790.5(b). Each extension request must state why EPA should grant the extension.

* * * * *

d. By revising § 790.55(a) to read as follows:

§ 790.55. Modification of test standards or schedules during conduct of test.

(a) *Application.* Any test sponsor who wishes to modify the test schedule for the mandatory testing conditions or requirements (i.e., ''shall statements'') in the test standard for any test required by a test rule must submit an application in accordance with this paragraph. Application for modification must be made in writing to EPA at the address in § 790.5(b), or by phone with written confirmation to follow within 10 working days. Applications must include an appropriate explanation and rationale for the modification. Where a test sponsor requests EPA to provide guidance or to clarify a non-mandatory testing requirement (i.e., ''should statements'') in a test standard, the test sponsor should submit these requests to EPA at the address in § 790.5(b).

* * * * *

e. By revising § 790.62(c)(4) to read as follows:

§ 790.62 Submission of study plans and conduct of testing.

* * * * *

(c) * * *

(4) The test sponsor shall submit any amendments to study plans to EPA at the address specified in § 790.5(b).

f. By revising § 790.68(b)(1) to read as follows:

§ 790.68 Modification of consent order.

* * * * *

(b) * * * (1) Any test sponsor who wishes to modify the test schedule for any test required under a consent order must submit an application in accordance with this paragraph. Application for modification must be made in writing to EPA at the address in § 790.5(b), or by phone with written confirmation to follow within 10 working days. Applications must include an appropriate explanation and rationale for the modification. EPA will consider only those applications that request modifications to mandatory testing conditions or requirements (''shall statements'' in the consent order). Where a test sponsor requests EPA to provide guidance or to clarify a non-mandatory testing requirement (i.e., ''should statements''), the test sponsor should submit these requests to EPA at the address in section 790.5(b).

13. In part 795:

PART 795—[AMENDED]

a. The authority citation for part 795 continues to read as follows:

Authority: 15 U.S.C. 2603.

§ 795.232 [Amended]

2. Section 795.232(c)(2)(i) is amended by removing the words ''ASTM D 1863–83 is available for public inspection at the Office of the Federal Register, Rm. 8301, 11th and L St., NW., Washington, DC 20408, and copies may be obtained from the EPA, TSCA Public Docket Office, Rm. NE G–004, 401 M St., SW., Washington, DC 20460'' and adding in place thereof the words ''ASTM D 1863–83 is available for public inspection at the Office of the Federal Register, Suite 700, 800 North Capitol St., NW., Washington, DC, and copies may be obtained from the Non-Confidential Information Center (NCIC) (7407), Office of Pollution Prevention and Toxics, U.S. Environmental Protection Agency, Room B–607 NEM, 401 M Street, SW., Washington, DC, 20460, between the hours of 12 p.m. and 4 p.m. weekdays excluding legal holidays''.

14. In part 796:

PART 796—[AMENDED]

a. The authority citation for part 796 continues to read as follows:

Authority: 15 U.S.C. 2603

§ 796.1950 [Amended]

b. Section 796.1950(b)(2)(i) is amended by removing the words ''Copies of the incorporated material may be obtained from the TSCA Public

Docket Office (TS–793), Rm. NE–G004, Office of Pollution Prevention and Toxics, Environmental Protection Agency, 401 M St., SW., Washington, DC, 20460,'' and adding in place thereof the words ''Copies of the incorporated material may be obtained from the Non-Confidential Information Center (NCIC) (7407), Office of Pollution Prevention and Toxics, U.S. Environmental Protection Agency, Room B–607 NEM, 401 M St., SW., Washington, DC, 20460, between the hours of 12 p.m. and 4 p.m. weekdays excluding legal holidays,''.

§ 796.3500 [Amended]

c. Section 796.3500(b)(1)(ii) is amended by removing the words ''Copies of the incorporated material may be obtained from the TSCA Public Docket Office (TS–793), Rm. NE–G004, Office of Pollution Prevention and Toxics, Environmental Protection Agency, 401 M St., SW., Washington, DC, 20460,'' and adding in place thereof the words ''Copies of the incorporated material may be obtained from the Non-Confidential Information Center (NCIC) (7407), Office of Pollution Prevention and Toxics, U.S. Environmental Protection Agency, Room B–607 NEM, 401 M St., SW., Washington, DC, 20460, between the hours of 12 p.m. and 4 p.m. weekdays excluding legal holidays,''.

15. In part 799:

PART 799—[AMENDED]

a. The authority citation for part 799 continues to read as follows:

Authority: 15 U.S.C. 2603, 2611, 2625.

b. Section 799.5 is revised to read as follows:

§ 799.5 Submission of information.

Information (letters, study plans, reports) submitted to EPA under this part must bear the Code of Federal Regulations section number of the subject chemical test rule (e.g., § 799.1285 for Cumene) and must be addressed to the Document Control Office (7407), Office of Pollution Prevention and Toxics, U.S. Environmental Protection Agency, Room G–099, 401 M St., SW., Washington, DC., 20460.

c. Section 799.1285 is amended by revising the second sentence of paragraph (e)(1)(i), and the second sentence of paragraph (e)(2)(i) to read as follows:

§ 799.1285 Cumene.

* * * * *

(e) * * *

(1) * * *

(i) * * * The method is available for public inspection at the Office of the Federal Register, Suite 700, 800 North Capitol St. Washington, DC, and copies may be obtained from the Non-Confidential Information Center (NCIC) (7407), Office of Pollution Prevention and Toxics, U.S. Environmental Protection Agency, Room B–607 NEM, 401 M Street, SW., Washington, DC, 20460, between the hours of 12 p.m. and 4 p.m. weekdays excluding legal holidays. * * *

* * * * *

(2) * * *

(i) * * * The method is available for public inspection at the Office of the Federal Register, Suite 700, 800 North Capitol St. Washington, DC, and copies may be obtained from the Non-Confidential Information Center (NCIC) (7407), Office of Pollution Prevention and Toxics, U.S. Environmental Protection Agency, Room B–607 NEM, 401 M Street, SW., Washington, DC, 20460, between the hours of 12 p.m. and 4 p.m. weekdays excluding legal holidays. * * *

* * * * *

d. Section 799.1575 is amended by revising paragraphs (c)(1)(ii)(C), (c)(2)(ii)(C), and the last sentence in paragraph (c)(3)(ii) and the last sentence in paragraph (d)(2) to read as follows:

§ 799.1575 Diethylenetriamine (DETA).

* * * * *

(c) * * *

(1) * * *

(ii) * * *

(C) These revised EPA-approved modified study plans are available for inspection in the Non-Confidential Information Center (NCIC) (7407), Office of Pollution Prevention and Toxics, U.S. Environmental Protection Agency, Room B– 607 NEM, 401 M St., SW., Washington, DC, 20460, between the hours of 12 p.m. and 4 p.m. weekdays excluding legal holidays.

* * * * *

(2) * * *

(ii) * * *

(C) These revised EPA-approved modified study plans are available for inspection in the Non-Confidential Information Center (NCIC) (7407), Office of Pollution Prevention and Toxics, U.S. Environmental Protection Agency, Room B– 607 NEM, 401 M St., SW., Washington, DC, 20460, between the hours of 12 p.m. and 4 p.m. weekdays excluding legal holidays.

* * * * *

(3) * * *

(ii) * * * This revised EPA-approved modified study plans is available for inspection in the Non-Confidential Information Center (NCIC) (7407), Office of Pollution Prevention and Toxics, U.S. Environmental Protection Agency, Room B– 607 NEM, 401 M St., SW., Washington, DC, 20460, between the hours of 12 p.m. and 4 p.m. weekdays excluding legal holidays.

* * * * *

(d) * * *

(2) * * * This revised EPA-approved modified study plans are available for inspection in the Non-Confidential Information Center (NCIC) (7407), Office of Pollution Prevention and Toxics, U.S. Environmental Protection Agency, Room B–607 NEM, 401 M St., SW., Washington, DC, 20460, between the hours of 12 p.m. and 4 p.m. weekdays excluding legal holidays.

* * * * *

e. Section 799.2155(a)(1) is amended by revising the last sentence to read as follows:

§ 799.2155 Commercial hexane.

(a) * * *

(1) * * * Copies of the incorporated material may be obtained from the Non-Confidential Information Center (NCIC) (7407), Office of Pollution Prevention and Toxics, U.S. Environmental Protection Agency, Room B– 607 NEM, 401 M St., SW., Washington, DC, 20460, between the hours of 12 p.m. and 4 p.m. weekdays excluding legal holidays.

* * * * *

§ 799.4360 [Amended]

d. Section 799.4360(d)(7)(i)(B) is amended by removing the words ''copies may be obtained from the EPA TSCA Public Docket Office in Rm. G–004, NE Mall, 401 M St., SW., Washington, DC 20460.'' and adding in place thereof the words ''copies may be obtained from the Non-Confidential Information Center (NCIC) (7407), Office of Pollution Prevention and Toxics, U.S. Environmental Protection Agency, Room B–607 NEM, 401 M St., SW., Washington, DC, 20460, between the hours of 12 p.m. and 4 p.m. weekdays excluding legal holidays.''

* * * * *

[FR Doc. 95–16287 Filed 6–30–95; 8: 45 am]

BILLING CODE 6560–50–F

DEPARTMENT OF DEFENSE

48 CFR Part 204, 215, 217, and 243

Defense Federal Acquisition Regulation Supplement; Sequence of Progress Payments and Contract Modifications

AGENCY: Department of Defense (DoD).

ACTION: Final rule.

SUMMARY: The Director of Defense Procurement has amended the Defense Federal Acquisition Regulation Supplement (DFARS) to provide additional guidance regarding identification of accounting classification information in DoD contracts.

DATES: Effective date: July 3, 1995.

FOR FURTHER INFORMATION CONTACT:

Ms. Michele Peterson, Defense Acquisition Regulations Council, PDUSD (A&T) DP (DAR), 3062 Defense Pentagon, Washington, DC 20301–3062, telephone (703) 602–0131. Please cite DFARS Case 93–D016/95–D012 in all correspondence related to this issue.

SUPPLEMENTARY INFORMATION:

A. Background

This final rule amends DFARS Parts 204, 215, 217, and 243 to require contracting officers to clearly identify accounting classification information in DoD contracts, so that payments to contractors may be made from the appropriate funding source.

B. Regulatory Flexibility Act

This final rule does not constitute a significant revision within the meaning of Public Law 98–577 and publication for public comment is not required. Therefore, the Regulatory Flexibility Act does not apply. However, comments from small entities concerning the affected DFARS subparts will be considered in accordance with Section 610 of the Act. Please cite DFARS Case 93–D016/95–D012 in correspondence.

C. Paperwork Reduction Act

The Paperwork Reduction Act does not apply because this final rule does not impose any new information collection requirements which require the approval of OMB under 44 U.S.C. 3501, *et seq.*

List of Subjects in 48 CFR Part 204, 215, 217, and 243

Government procurement.

Michele P. Peterson

Executive Editor, Defense Acquisition Regulations Council.

Therefore, 48 CFR Parts 204, 215, 217, and 243 are amended as follows:

1. The authority citations for 48 CFR Part 204, 215, 217, and 243 are revised to read as follows:

Authority: 41 U.S.C. 421 and 48 CFR Chapter 1.

PART 204—ADMINISTRATIVE MATTERS

2. Section 204.7101 is amended by revising the definition of ''accounting classification reference number'' and by adding a definition of ''nonseverable deliverable'' to read as follows:

204.7101 Definitions.

Accounting classification reference number (ACRN) means a two position alpha or alpha/numeric control code used as a method of relating the accounting classification citation to detailed line item information contained in the schedule.

* * * * *

Nonseverable deliverable, as used in this subpart, means a deliverable item that is a single end product or undertaking, entire in nature, that cannot be feasibly subdivided into discrete elements or phases without losing its identity.

* * * * *

3. Section 204.7102 is amended by revising the introductory text of paragraph (b) to read as follows:

204.7102 Policy.

* * * * *

(b) The numbering procedures are mandatory for all contracts where separate contract line item numbers are assigned, unless—

* * * * *

4. Section 204.7103–1 is amended by revising the word ''three'' to read ''four'' in the introductory text of paragraph (a), and by adding a new paragraph (a)(4) to read as follows:

204.7103–1 Criteria for establishing.

* * * * *

(a) * * *

(4) *Single accounting classification citation.*

(i) Each contract line item shall reference a single accounting classification citation except as provided in paragraph (a)(4)(ii) of this subsection.

(ii) The use of multiple accounting classification citations for a contract line item is authorized in the following situations:

(A) A single, nonseverable deliverable to be paid for with R&D or other funds properly incrementally obligated over several fiscal years in accordance with DoD policy;

(B) A single, nonseverable deliverable to be paid for with different authorizations or appropriations, such as in the acquisition of a satellite or the modification or production tooling used to produce items being acquired by several activities; or

(C) A modification to an existing contract line item for a nonseverable deliverable that results in the delivery of a modified item(s) where the item(s) and modification are to be paid for with different accounting classification citations.

(iii) When the use of multiple accounting classification citations is authorized for a single contract line item, establish informational subline items for each accounting classification citation in accordance with 204.7104–1(a).

* * * * *

5. Section 204.7104–1 is amended by adding a new paragraph (a)(3) and by revising paragraphs (b)(1) introductory text and (b)(1)(i) to read as follows:

204.7104–1 Criteria for establishing.

* * * * *

(a) * * *

(3) Informational subline items shall be used to identify each accounting classification citation assigned to a single contract line item number when use of multiple citations is authorized (see 204.7103–1(a)(4)(ii)).

(b) *Separately identified subline items.* (1) Subline items will be used instead of contract line items to facilitate payment, delivery tracking, contract funds accounting, or other management purposes. Such subline items shall be used when items bought under one contract line item number—

(i) Are to be paid for from more than one accounting classification. A subline item shall be established for the quantity associated with the single accounting classification citation. Establish a line item rather than a subline item if it is likely that a subline item may be assigned additional accounting classification citations at a later date. Identify the funding as described in 204.7104–1(a)(3);

* * * * *

6. Section 204.7104–2 is amended by revising the example in paragraph (e)(5); by redesignating paragraphs (e)(7) and (e)(8) as paragraphs (e)(8) and (e)(9), respectively; and by adding a new paragraph (e)(7) to read as follows:

204.7104–2 Numbering procedures.

* * * * *

(e) * * *

(5) * * *

Item No.	Supplies/service	Quantity	Unit	Unit price	Amount
0001	6105–00–635–6568 50380 Ref No 63504–WZ Armature				
0001AA	6105–00–635–6568 50380 Ref No 63504–WZ Armature Motor ACRN:AA	2	Ea	$2,895.87	$5,791.74
0001AB	Packaging ACRN:AA	2	Ea	$289.58	$579.16

* * * * *

(7) Informational subline items established to identify multiple accounting classification citations assigned to a single contract line item.

Item No.	Supplies/service	Quantity	Unit	Unit price	Amount
0001	Air Vehicle	1	Ea	$6,700,000	$6,700,000
000101	ACRN:AA $3,300,000				
000102	ACRN:AB $2,000,000				
000103	ACRN:AC $1,400,000				

* * * * *

7. Section 204.7107 is revised to read as follows:

204.7107 Contract accounting classification reference number (ACRN).

(a) When a contract contains more than one accounting classification citation, contracting offices shall use ACRNs. Assigning the ACRNs is the responsibility of the contracting office issuing the contract, basic ordering agreement, or blanket purchase agreement. This authority shall not be delegated. If more than one office will use the contract (e.g., ordering officers, other contracting officers), the contract must contain instructions for assigning ACRNs.

(b) ACRNs are used to process certain contract data through the Military Standard Contract Administration Procedures (MILSCAP) system. The MILSCAP system uses the ACRN to relate certain contract administration records to the accounting classification citation used to obligate funds on the contract. Among these records are the accounting classification trailer record, the supplies schedules data record, and the services line item data record. ACRNs are also used to associate the various record formats of the contract payment notice as described in chapter 9 of the MILSCAP Manual, DoD 4000.25–5–M.

(c) *Procedures for establishing ACRNs.* ACRNs consist of a two position alpha or alpha/numeric code assigned to each discrete accounting classification citation within each contract. ACRNs shall be established in accordance with the following guidelines:

(1) Do not use the letters I and O.

(2) In no case shall an ACRN apply to more than one accounting classification citation, nor shall more than one ACRN be assigned to one accounting classification citation.

(d) *Using the ACRN in the contract.* (1) Show the ACRN as a detached prefix to the accounting classification citation in the accounting and appropriation data block or, if there are too many accounting classification citations to fit reasonably in that block, in section G (Contract Administration Data).

(2) ACRNs need not prefix accounting classification citations if the accounting classification citations are present in the contract only for the transportation officer to cite to Government bills of lading.

(3) If the contracting officer is making a modification to a contract and using the same accounting classification citations, which have had ACRNs assigned to them, the modification need cite only the ACRNs in the accounting and appropriations data block or on the continuation sheets.

(e) *Showing the ACRN in the contract.* If there is more than one ACRN in a contract, all the ACRNs will appear in several places in the schedule (e.g., ACRN:AA).

(1) *Ship-to/mark-for block.* Show the ACRN beside the identify code of each activity in the ship-to/mark-for block unless only one accounting classification citation applies to a line item or subline item. Only one ACRN may be assigned to the same ship-to/mark-for within the same contract line or subline item number unless multiple accounting classification citations apply to a single nonseverable deliverable unit such that the item cannot be related to an individual accounting classification citation.

(2) *Supplies/services column.* (i) If only one accounting classification citation applies to a line item or a subline item, the ACRN may be shown in the supplies/services column near the item description.

(ii) If more than one accounting classification citation applies to a single contract line item, identify each assigned ACRN and the amount of associated funds using informational subline items (see 204.7104–1(a)).

(3) *Payment instructions.* (i) When a contract line item is funded by multiple accounting classification citations, the contracting officer shall provide adequate instructions in section G (Contract Administration Data), under the heading ''Payment Instructions for Multiple Accounting Classification Citations,'' to permit the paying office to charge the accounting classification citations assigned to that contract line item (see 204.7104–1(a)) in a manner that reflects the performance of work on the contract. If additional accounting classification citations are subsequently added, the payment instructions must be modified to include the accounting classification citations.

(ii) Payment instructions shall provide a methodology for the paying office to assign payments to the appropriate accounting classification citation(s), based on anticipated contract work performance. The method established should be consistent with the reasons for the establishment of the line items. The payment method may be based upon a unique distribution profile devised to reflect how the funds represented by each of the accounting classification citations support contract performance. Payment methods that direct that payments be made from the earliest available fiscal year funding sources, or that provide for proration across accounting classification citations assigned to the line item, or a combination thereof, may be used if that methodology reasonably reflects how

each of the accounting classification citations supports contract performance.

* * * * *

PART 215—CONTRACTING BY NEGOTIATION

8. A new section 215.406–2 is added to read as follows:

215.406–2 Part I—The schedule.

(g) When a contract contains both fixed-priced and cost-reimbursement line items or subline items, the contracting officer shall provide, in Section B, Supplies or Services and Prices/Costs, an identification of contract type specified for each contract line item or subline item to facilitate appropriate payment.

PART 217—SPECIAL CONTRACTING METHODS

9. Section 217.7405 is revised to read as follows:

217.7405 Definitizations.

For each definitization modification, the contracting officer shall include all data required by 243.171.

10. Section 217.7406 is added to read as follows:

217.7406 Contract clause.

Use the clause at 252.217.7027, Price Ceiling, in all undefinitized contract actions and solicitations associated with UCAs. Insert the not-to-exceed amount.

PART 243—CONTRACT MODIFICATIONS

11. Section 243.171 is added to read as follows:

243.171 Obligation or deobligation of funds.

For each contract modification, the contracting officer shall identify, in Section G, Contract Administration Data (Uniform Contract Format), or the contract schedule (Simplified Contract Format), under the heading ''Summary for the Payment Office,'' information sufficient to permit the paying office to readily identify the changes for each contract line and subline item as follows—

(a) The amount of funds obligated by prior contract actions, to include the total cost and fee if a cost-type contract; the target fee at time of contract award if a cost-plus-incentive-fee contract; the base fee if a cost-plus-award-fee contract; or the target price and target profit if a fixed-price incentive contract;

(b) The amount of funds obligated or deobligated by the instant modification, categorized by the types of contracts specified in paragraph (a) of this section; and

(c) The total cumulative amount of obligated or deobligated funds, categorized by the types of contracts specified in paragraph (a) of this section.

[FR Doc. 95–16162 Filed 6–30–95; 8:45 am]

BILLING CODE 5000–04–M

---

48 CFR Part 225

Defense Federal Acquisition Regulation Supplement; Determinations Under the Buy American Act

AGENCY: Department of Defense (DoD).

ACTION: Interim rule with request for comment.

SUMMARY: The Director of Defense Procurement has issued an interim rule amending the Defense Federal Acquisition Regulation Supplement (DFARS) to expand the guidance regarding public interest exceptions to the Buy American Act.

DATES: Effective Date: July 3, 1995.

Comment date: Comments on the interim rule should be submitted in writing to the address shown below on or before September 1, 1995, to be considered in the formulation of the final rule.

ADDRESSES: Interested parties should submit written comments to: Defense Acquisition Regulations Council, Attn: Ms. Amy Williams, PDUSD(A&T)DP(DAR), IMD 3D139, 3062 Defense Pentagon, Washington, DC 20301–3062. Telefax number (703) 602–0350. Please cite DFARS Case 94–D313 in all correspondence related to this issue.

FOR FURTHER INFORMATION CONTACT: Ms. Amy Williams, (703) 602–0131.

SUPPLEMENTARY INFORMATION:

A. Background

This interim DFARS rule implements Section 812 of the Fiscal Year 1995 Defense Authorization Act (Pub. L. 103–337). Section 812 adds several factors to the series of factors at 10 U.S.C. 2533 that DoD must consider when determining whether to grant a public interest exception to the Buy American Act (41 U.S.C. 10). In addition, this rule revises the internal DoD approval requirements for granting such exceptions.

B. Regulatory Flexibility Act

This interim rule is not expected to have a significant economic impact on a substantial number of small entities within the meaning of the Regulatory Flexibility Act, 5 U.S.C. 601 *et seq.*, because the DFARS already permits DoD to grant public interest exceptions to the Buy American Act, where the purposes of the Buy American Act are not served. This interim rule merely amends the DFARS guidance to reflect a recent change to the list of considerations at 10 U.S.C. 2533, and to streamline internal DoD approval requirements. An Initial Regulatory Flexibility Analysis has therefore not been performed. Comments are invited from small businesses and other interested parties. Comments from small entities concerning the affected DFARS subparts will also be considered in accordance with Section 610 of the Act. Such comments must be submitted separately and cite DFARS Case 94–D313 in correspondence.

C. Paperwork Reduction Act

The Paperwork Reduction Act does not apply because this interim rule does not impose any new information collection requirements which require the approval of OMB under 44 U.S.C. 3501 *et seq.*

D. Determination To Issue an Interim Rule

A determination has been made under the authority of the Secretary of Defense that compelling reasons exist to publish this interim rule prior to affording the public an opportunity to comment. This action is necessary to implement Section 812 of the Fiscal Year 1995 Defense Authorization Act (Pub. L. 103–337). Comments received in response to the publication of this interim rule will be considered in formulating the final rule.

List of Subjects in 48 CFR Part 225

Government procurement.

Michelle P. Peterson,

Executive Editor, Defense Acquisition Regulations Council.

Therefore, 48 CFR Part 225 is amended as follows:

1. The authority citation for 48 CFR part 225 is revised to read as follows:

Authority: 41 U.S.C. 421 and 48 CFR Chapter 1.

PART 225—FOREIGN ACQUISITION

2. Section 225.102 is amended by revising paragraph (a)(3) to read as follows:

225.102 Policy.

(a)(2) * * *

(3)(A) Specific public interest exceptions for DoD are in 225.872.

(B) Normally, use the evaluation procedures in 225.105, but consider recommending a public interest exception where the purposes of the

Buy American Act are not served, or in order to meet a need set forth in 10 U.S.C. 2533. For example, a public interest exception may be appropriate—

(1) If accepting the low domestic offer will involve substantial foreign expenditures, or accepting the low foreign offer will involve substantial domestic expenditures;

(2) To ensure access to advanced state-of-the-art commercial technology; or

(3) To maintain the same source of supply for spare and replacement parts (also see paragraph (b)(iii)(B) of this section)—

(i) For an end item that qualifies as an American good; or

(ii) In order not to impair integration of the military and commercial industrial base.

(C) A determination whether to grant a public interest exception shall be made after consideration of the factors in 10 U.S.C. 2533—

(1) At a level above the contracting officer for acquisitions valued at less than $100,000;

(2) By the head of the contracting activity for acquisitions valued at $100,000 or more but less than $1,000,000; or

(3) By the agency head for acquisitions valued at $1,000,000 or more.

* * * * *

[FR Doc. 95–16158 Filed 6–30–95; 8:45 am]

BILLING CODE 5000–04–M

48 CFR Parts 225 and 252

Defense Federal Acquisition Regulation Supplement; Supercomputers

AGENCY: Department of Defense (DoD).

ACTION: Interim rule with request for comment.

SUMMARY: The Director of Defense Procurement has issued an interim rule amending the Defense Federal Acquisition Regulation Supplement (DFFARS) to reflect a statutory restriction on the acquisition of supercomputers of foreign manufacture.

DATES: *Effective date:* July 3, 1995.

Comment date: Comments on the interim rule should be submitted in writing to the address shown below on or before September 1, 1995, to be considered in the formulation of the final rule

ADDRESSES: Interested parties should submit written comments to: Defense Acquisition Regulations Council, Attn: Ms. Amy Williams, PDUSD (AT&T)DP(DAR), IMD 3D139, 3062 Defense Pentagon, Washington, DC 20301–3062. Telefax number (703) 602–0350. Please cite DFARS Case 95–D301 in all correspondence related to this issue.

FOR FURTHER INFORMATION CONTACT: Ms. Amy Williams, (703) 602–0131.

SUPPLEMENTARY INFORMATION:

A. Background

This interim DFARS rule implements Section 8023 of the Fiscal Year 1995 Defense Appropriations Act (Pub. L. 103–335). Section 8023 and comparable sections in prior Defense Appropriations Acts require that any supercomputers acquired with defense funds appropriated in Fiscal Years 1988 through 1995 must be manufactured in the United States, unless the Secretary of Defense certifies to Congress that the supercomputers are for national security purposes and are not available from United States manufacturers.

B. Regulatory Flexibility Act

This interim rule is not expected to have a significant economic impact on a substantial number of small entities within the meaning of the Regulatory Flexibility Act, 5 U.S.C. 601 *et seq.*, because the rule places restrictions on the acquisition of foreign products. An Initial Regulatory Flexibility Analysis has therefore not been performed. Comments are invited from small businesses and other interested parties. Comments from small entities concerning the affected DFARS subparts will also be considered in accordance with Section 610 of the Act. Such comments must be submitted separately and cite DFARS Case 95–D301 in correspondence.

C. Paperwork Reduction Act

The Paperwork Reduction Act does not apply because this interim rule does not impose any new information collection requirements which require the approval of OMB under 44 U.S.C. 3501 *et seq.*

D. Determination To Issue an Interim Rule

A determination has been made under the authority of the Secretary of Defense that compelling reasons exist to publish this interim rule prior to affording the public an opportunity to comment. This action is necessary to implement Section 8023 of the Fiscal Year 1995 Defense Appropriations Act (Pub. L. 103–335). Comments received in response to the publication of this interim rule will be considered in formulating the final rule.

List of Subjects in 48 CFR Part 225 and 252

Government procurement.

Michele P. Peterson,

Executive Editor, Defense Acquisition Regulations Council.

Therefore, 48 CFR Parts 225 and 252 are amended as follows:

1. The authority citation for 48 CFR parts 225 and 252 is revised to read as follows:

Authority: 41 U.S.C. 421 and 48 CFR Chapter 1.

PART 225—FOREIGN ACQUISITION

2. Sections 225.7023, 225.7023–1, 225.7023–2, and 225.7023–3 are added to read as follows:

225.7023 Restriction on supercomputers.

225.7023–1 Restriction.

In accordance with Section 8101 of Pub. L. 100–202, and similar sections in subsequent Defense Appropriations Acts, do not purchase any supercomputer that is not manufactured in the United States.

225.7023–2 Waiver.

The restriction in 225.7023–1 may be waived by the Secretary of Defense on a case-by-case basis, after the Secretary of Defense certifies to the Armed Services and Appropriations Committees of Congress that—

(a) Adequate U.S. supplies are not available to meet requirements on a timely basis; and

(b) The acquisition must be made in order to acquire capability for national security purposes.

225.7023–3 Contract clause.

Use the clause at 252.225–7011, Restrictions on Acquisition of Supercomputers, in solicitations and contracts for the acquisition of supercomputers.

PART 252—SOLICITATION PROVISIONS AND CONTRACT CLAUSES

3. Section 252.225–7011 is added to read as follows:

252.225–7011 Restriction on Acquisition of Supercomputers.

As prescribed in 225.7023–3, use the following clause:

Restriction on Acquisition of Supercomputers (Insert month and year of publication in the **Federal Register**)

The Contractor agrees that any supercomputers furnished under this contract have been manufactured in the United States.

(End of clause)

[FR Doc. 95–16159 Filed 6–30–95; 8:45 am]

BILLING CODE 5000–04–M

DEPARTMENT OF COMMERCE

National Oceanic and Atmospheric Administration

50 CFR Part 301

[Docket No. 950106003–5070–02; I.D. 062695B]

Pacific Halibut Fisheries; Treaty Indian Commercial Fishery in Subarea 2A–1

AGENCY: National Marine Fisheries Service (NMFS), National Oceanic and Atmospheric Administration (NOAA), Commerce.

ACTION: Closure.

SUMMARY: The Assistant Administrator for Fisheries, NOAA, on behalf of the International Pacific Halibut Commission (IPHC), publishes this inseason action pursuant to IPHC regulations approved by the U.S. Government to govern the Pacific halibut fishery. This action is intended to enhance the conservation of Pacific halibut stock in order to help sustain it at an adequate level in the northern Pacific Ocean and Bering Sea.

EFFECTIVE DATE: June 12, 1995, through December 31, 1995.

FOR FURTHER INFORMATION CONTACT: Steven Pennoyer, 907-586-7221; William W. Stelle, Jr., 206-526-6140; or Donald McCaughran, 206-634-1838.

SUPPLEMENTARY INFORMATION: The IPHC, under the Convention between the United States of America and Canada for the Preservation of the Halibut Fishery of the Northern Pacific Ocean and Bering Sea (signed at Ottawa, Ontario, on March 2, 1953), as amended by a Protocol Amending the Convention (signed at Washington, DC, on March 29, 1979), has issued this inseason action pursuant to IPHC regulations governing the Pacific halibut fishery. The regulations have been approved by NMFS (60 FR 14651, March 20, 1995). On behalf of the IPHC, this inseason action is published in the **Federal Register** to provide additional notice of its effectiveness, and to inform persons subject to the inseason action of the restrictions and requirements established therein.

Inseason Action

Northwest Treaty Tribes Fishery in Area 2A

Northwest treaty Indian tribes were allocated a total allowable catch of 182,000 lb (82.55 metric tons (mt)) in the subarea 2A–1 (northern Washington coast) in 1995. Of this total, 11,000 lb (4.98 mt) are reserved for ceremonial and subsistence purposes, leaving 171,000 lb (77.56 mt) for the commercial fishery. The commercial catch as of June 12, 1995, in subarea 2A–1 was 175,000 lb (79.37 mt), closing the treaty Indian commercial fishery for the remainder of 1995.

Dated: June 26, 1995.

Richard W. Surdi,

Acting Director, Office of Fisheries Conservation and Management, National Marine Fisheries Service.

[FR Doc. 95–16236 Filed 6–30–95; 8:45 am]

BILLING CODE 3510–22–F

50 CFR Part 663

[Docket No. 950209046–5167–03; I.D. 011295D]

RIN 0648–AG82

Pacific Coast Groundfish Fishery; Modification of Nontrawl Sablefish Season

AGENCY: National Marine Fisheries Service (NMFS), National Oceanic and Atmospheric Administration (NOAA), Commerce.

ACTION: Final rule.

SUMMARY: NMFS announces regulations to establish a new season structure for the nontrawl sablefish component of the Pacific Coast Groundfish limited entry fishery off Washington, Oregon, and California. The new regular season for this fishery will begin each year at 12 noon August 6. In addition, both the limited entry and open-access groundfish fisheries are required to remove all fixed gear from the water 72 hours prior to the start of the regular season. This rule is intended to promote the goals and objectives of the Pacific Coast Groundfish Fishery Management Plan (FMP) by providing an equitable opportunity for different types of nontrawl gear to harvest the limited entry nontrawl allocation for sablefish, to enhance vessel safety by avoiding a winter opening, to keep the fishery within the annual management target, and to minimize gear conflicts.

EFFECTIVE DATE: August 2, 1995.

FOR FURTHER INFORMATION CONTACT: William L. Robinson at 206–526–6140; or Rodney McInnis at 310–980–4040.

SUPPLEMENTARY INFORMATION:

NMFS issues this final rule under the authority of the FMP and the Magnuson Fishery Conservation and Management Act (Magnuson Act). NMFS published a proposed rule at 60 FR 11062 (March 1, 1995), requesting comments through April 17, 1995, based on a recommendation of the Pacific Fishery Management Council (Council) at its October 1994 meeting. No written comments were received. NMFS concurs with the Council's recommendations, and therefore, this final rule is substantively the same as proposed, with several clarifications explained below. The proposed rule and Environmental Assessment and Regulatory Impact Review (EA/RIR) prepared for this action contain background and rationale.

Clarifications

The proposed rule stated that all nontrawl gear must be out of the water 72 hours before the regular season and sablefish may not be landed during that time. However, a review of the Council's motion revealed that this requirement was intended to apply only to fixed gear (longline, trap or pot, set net and stationary hook-and-line gear, including commercial vertical hook-and-line gear), not all nontrawl gear. Nontrawl gear includes fixed as well as mobile gear. Most at-sea enforcement of the closure will be conducted by over-flights. Because it is difficult to distinguish between the various types of access or limited entry fixed gear, the requirement for gear to be out of the water applies to both open access and limited entry operations. Mobile nontrawl gear catches only small amounts of sablefish, and, since it is not marked with buoys, its use does not complicate aerial enforcement. Therefore, it is unnecessary to require mobile nontrawl gear to be out of the water. In the pink shrimp and spot and ridgeback prawn fisheries, pot (trap) vessels may set their gear as long as groundfish are not retained or landed during the 72–hour period.

To facilitate enforcement, NMFS intends to use 12 noon as the starting and ending times of the regular and mop-up fisheries, whenever practicable. Regarding the length of the mop-up season and amount of the cumulative trip limit, the requirement for the NMFS Regional Director to consult with the Council's ''Groundfish Management Team'' has been revised to its ''designees'' to provide flexibility.

The Council confirmed its intent and it is NMFS policy that, as in other groundfish fisheries, a vessel must initiate offloading its catch before the effective time of any closure or reduced trip limit. This ensures that fishers have enough time to come to shore and start offloading their catch, which is well documented because each landing of

groundfish requires a State ''fish ticket'' or similar documentation.

Classification

The Assistant Administrator for Fisheries, NOAA (AA), has determined that this final rule is necessary for management of the Pacific Coast groundfish fishery and that it is consistent with the Magnuson Act and other applicable law.

The Council prepared an EA for this rule (contained in the EA/RIR) and the AA concluded that there would be no significant impact on the environment.

This rule has been determined to be not significant for purposes of E.O. 12866.

List of Subjects in 50 CFR Part 663

Fisheries, Fishing, Reporting and recordkeeping requirements.

Dated: June 28, 1995.

Gary Matlock,

Program Management Officer, National Marine Fisheries Service.

For the reasons set out in the preamble, 50 CFR part 663 is amended as follows:

PART 663—PACIFIC COAST GROUNDFISH FISHERY

1. The authority citation for part 663 continues to read as follows:

Authority: 16 U.S.C. 1801 *et seq.*

2. Effective August 2, 1995, § 663.23, paragraph (b)(2) is revised to read as follows. This amendment supersedes the document published at 60 FR 10040, February 23, 1995.

§ 663.23 Catch restrictions.

* * * * *

(b) * * *

(2) *Nontrawl sablefish*. This paragraph (b)(2) applies to the limited entry fishery, except for paragraphs (b)(2)(i) and (v), which also apply to the open-access fishery. All times are local times.

(i) *Pre-season closure—Open-access and limited entry fisheries*. (A) Sablefish taken with fixed gear in the limited entry or open access fishery in the EEZ may not be retained or landed from 12 noon August 3 through 12 noon August 6.

(B) All fixed gear used to take and retain groundfish must be out of EEZ waters from 12 noon August 3 through 12 noon August 6, except that pot gear used to take and retain groundfish may be deployed and baited in the EEZ after 12 noon on August 5.

(ii) *Regular season—Limited entry fishery*. The regular season for the limited entry nontrawl sablefish fishery begins at 1201 hours on August 6. During the regular season, the limited entry nontrawl sablefish fishery may be subject to trip limits to protect juvenile sablefish. The regular season will end when 70 percent of the limited entry nontrawl allocation has been or is projected to be taken. The end of the regular season may be announced in the **Federal Register** either before or during the regular season.

(iii) *Mop-up season—Limited entry fishery*. A mop-up season to take the remainder of the limited entry nontrawl allocation will begin about 3 weeks after the end of the regular season, or as soon as practicable thereafter. During the mop-up fishery, a cumulative trip limit will be imposed. The length of the mop-up season and amount of the cumulative trip limit, including the time period to which it applies, will be determined by the Regional Director in consultation with the Council or its designees, and will be based primarily on the amount of fish remaining in the allocation and the number of participants anticipated. The Regional Director may determine that too little of the nontrawl allocation remains to conduct an orderly or manageable fishery, in which case there will not be a mop-up season.

(iv) The dates and times that the regular season ends (and trip limits on sablefish of all sizes are resumed) and the mop-up season begins and ends, and the size of the trip limit for the mop-up fishery, will be announced in the **Federal Register**, and may be modified. Unless otherwise announced, these seasons will begin and end at 12 noon on the specified date.

(v) Trip and/or frequency limits may be imposed in the limited entry fishery before and after the regular season, and after the mop-up season, under paragraph (c) of this section. Trip and/or size limits to protect juvenile sablefish in the limited entry or open-access fisheries also may be imposed at any time under paragraph (c) of this section. Trip limits may be imposed in the open-access fishery at any time under paragraph (c) of this section.

[FR Doc. 95–16312 Filed 6–30–95; 8:45 am]

BILLING CODE 3510–22–F

Proposed Rules

Federal Register
Vol. 60, No. 127
Monday, July 3, 1995

This section of the FEDERAL REGISTER contains notices to the public of the proposed issuance of rules and regulations. The purpose of these notices is to give interested persons an opportunity to participate in the rule making prior to the adoption of the final rules.

DEPARTMENT OF AGRICULTURE

Office of the Secretary

7 CFR Parts 1 and 47

Rules of Practice

AGENCY: Office of the Secretary of Agriculture, USDA.

ACTION: Proposed rule.

SUMMARY: We are proposing to amend the Rules of Practice Governing Formal Adjudicatory Proceedings Instituted by the Secretary Under Various Statutes and the Rules of Practice Under the Perishable Agricultural Commodities Act. The purpose of the proposal is to provide that the adjudication, under the Perishable Agricultural Commodities Act, of whether an individual is ''responsibly connected'' with a particular commission merchant, dealer, or broker will be joined with any related disciplinary proceedings against the same commission merchant, dealer, or broker; and to provide that any adjudications of such status be made by Administrative Law Judge of the Department of Agriculture.

DATES: Consideration will be given only to comments received on or before August 2, 1995.

ADDRESSES: Please send an original and three copies of your comments to Barbara S. Good, Trial Attorney, Office of the General Counsel, USDA, Room 2446, South Building, 14th Street and Independence Avenue, S.W., Washington, DC 20250–1400. Comments received may be inspected at USDA, Room 2446, South Building, 14th Street and Independence Avenue S.W., Washington, DC 20250–1400, between 9:00 a.m. and 5:30 p.m., Monday through Friday, except holidays. Persons wishing to inspect comments are encouraged to call (202) 720–7357 in advance to make arrangements.

FOR FURTHER INFORMATION CONTACT: Mary Hobbie, Assistant General Counsel, Trade Practices Division, Office of the General Counsel, USDA, Room 2446 South Building, 14th Street and Independence Avenue, S.W., Washington, DC 20250–1400. (202) 720–5293.

SUPPLEMENTARY INFORMATION: Disciplinary Proceedings. Section 2 of the Perishable Agricultural Commodities Act (PACA), 7 U.S.C. 499b, proscribes as unfair various conduct on the part of commission merchants, dealers, or brokers. The PACA provides redress for such unlawful conduct in the form of suspension or revocation of required licenses, and to a limited extent, civil penalties. The Agricultural Marketing Service (AMS) of the U.S. Department of Agriculture (USDA) enforces § 2 of the PACA, in part, through administrative proceedings adjudicated by Administrative Law Judges.

While the PACA is the substantive law governing these administrative disciplinary proceedings, The Rules of Practice Governing Formal Adjudicatory Proceedings Instituted by the Secretary Under Various Statutes (Rules of Practice), at 7 CFR 1.130 *et seq.*, provide their procedural framework. Disciplinary proceedings are instituted by filling a formal complaint with the Hearing Clerk. The respondent is given the opportunity to file an answer to the complaint. An Administrative Law Judge determines the issues and makes a decision after opportunity for a full evidentiary hearing. Both parties may request testimonial and documentary subpoenas. Any decision of the Administrative Law Judge may be appealed to the Judicial Officer, acting for the Secretary. An appeal from a decision of the Judicial Officer may be taken to the appropriate U.S. Circuit Court of Appeals.

Proceedings to determine responsibly connected status. In addition to the proscription against unfair conduct embodied in § 2, § 8(b) of the PACA (7 U.S.C. 499h(b)) forbids a licensee from employing a person who is or has been ''responsibly connected'' with a firm or person whose license has been revoked or is under suspension by the Secretary, a person who has been found to have committed any flagrant or repeated violation of § 2, or against whom there is an unpaid reparation award. Such employment violations subject the employing firm or individual to license suspension or revocation.

The PACA, in § 1(9) (7 U.S.C. 499a), defines ''responsibly connected'' to mean ''affiliated or connected with a commission merchant, dealer, or broker as (A) partner in a partnership, or (B) officer, director, or holder of more than 10 per centum of the outstanding stock of a corporation or association.''

Prior to 1975, the determination as to responsibly connected status was made without the benefit of an oral hearing. After the decision of the U.S. Court of Appeals for the District of Columbia in *Quinn v. Butz*, 510 F.2d 743 (D.C. Cir. 1975), USDA instituted a procedure governed by regulations published at 7 CFR 47.47 *et seq.* giving any person finally determined by the PACA Branch of AMS to have been responsibly connected to a firm subject to license revocation or suspension the opportunity for an oral hearing before a presiding officer appointed by AMS.

Currently, determinations as to whether an individual is responsibly connected to a particular commission merchant, dealer, or broker are made independently of any related disciplinary proceeding against the commission merchant, dealer, or broker. Although typically the two proceedings involve a common fact nucleus, currently no mechanism exists for joining the procedures to achieve a more efficient use of resources. In addition, in those cases where the individual requests oral hearing, responsibly connected proceedings frequently are not concluded until the sanction in the related disciplinary proceeding has been in effect for a year or more. Thus, although an offending entity's license may have been revoked for as much as a year, those individuals responsible for the violations may nevertheless continue to be employed in the industry pending a determination of responsibly connected status.

The rules currently governing determination of responsibly connected status are set out at 7 CFR 47.47 *et seq.* In brief, these rules provide for a preliminary determination by the Perishable Agricultural Commodities Branch (PACA Branch), AMS, as to the status of a person who is potentially responsibly connected, notification of the preliminary determination, and an opportunity to respond and furnish evidence to the Chief, PACA Branch. If the Chief, PACA Branch, sustains the preliminary determination that the

individual is responsibly connected, the individual is then entitled to file a petition with the Administrator of AMS for a review proceeding and final decision and to request an oral hearing. If an oral hearing is requested, it is held before a hearing officer appointed by the Administrator. Appeals of adverse decisions of the Administrator lie to the U.S. Circuit Courts of Appeal. In any event, no employment sanction begins to run until one of the following three conditions set forth in § 8(b) of the PACA exists: (1) the license of the firm with which the responsible connection exists has been suspended or revoked; (2) there is a finding that the firm has committed a flagrant or repeated violation of § 2 of the PACA; or (3) the firm has failed to pay a reparation award under § 7 of the PACA.

Proposed rules to combine disciplinary proceedings with determinations of responsibly connected status. We propose to modify the procedures for determining responsibly connected status to accomplish two objectives: (1) To consolidate, where the possibility exists, hearings in disciplinary cases and related determinations of responsibly connected status; and (2) to provide for review by an Administrative Law Judge of the final determination of the Chief, PACA Branch that an individual is responsibly connected. Because the issues in both types of proceedings are based upon identical or closely-related facts, and because the sanctions are related, such a procedure eliminates the need for duplicative litigation. It also offers the advantage of insuring that the sanctions against the licensee and the individuals responsibly connected with it will commence concurrently.

Instead of filing a petition for review with the Administrator of AMS, under the proposed procedures, the individual contesting the final determination by the Chief, PACA Branch, that he or she is responsibly connected will file a petition for review with the Office of the Hearing Clerk, and the petition will be decided by an Administrative Law Judge, after opportunity for oral hearing. Any hearing on a responsibly connected determination will be consolidated with the hearing, if any, on the disciplinary matters out of which the issue of responsibly connected status arose. Likewise, all responsibly connected hearings arising out of the relationship between more than one individual and one particular PACA licensee will be consolidated.

To illustrate by hypothetical, assume that PACA Branch, AMS, institutes a disciplinary proceeding against the Acme Produce Company, of which the officers, directors, and shareholders of greater than 10 percent of the stock consist of Able, Jones, and Smith. Under the proposal, all issues arising out of the disciplinary infractions charged against Acme and all employment sanctions arising out of the relationships between Acme on the one hand and Able, Jones, and Smith on the other hand will be consolidated for hearing to the extent that the employment sanctions originate from Acme's alleged disciplinary violations. If for any reason there is no hearing on the issues involving Acme, but Able, Jones, and Smith file petitions for review of their status as responsibly connected individuals and request hearings, those hearings will be consolidated in one proceeding before an Administrative Law Judge.

To the extent that no disciplinary proceeding has been instituted against Acme and the proposed employment sanctions against Able, Jones and Smith arise under PACA § 8(B)(3) solely from Acme's failure to pay one or more reparation awards under PACA § 7, all hearings on petitions for review will be consolidated in one proceeding before an Administrative Law Judge. The vehicle used to achieve this consolidation will be a mandatory joinder under the Rules of Practice as amended.

USDA believes that the proposed procedures, by reducing the incidence of multiple hearings, will facilitate speedy enforcement of the PACA and will result in savings in employee time and travel expense. They will also abolish the need for AMS to employ individuals to act as presiding officers at responsibly connected proceedings. In 1994, presiding officers were paid $26,866, a large portion of which would be saved under the proposed new regulation.

Executive Order 12866 and Regulatory Flexibility Act

The Secretary has determined that, if adopted, this proposed rule would not have a significant economic impact on a substantial number of small entities. While small entities will continue to be subject to identical substantive requirements under the revised procedures, the new procedures will not result in any new burdens. The new rule merely changes the form of the hearing utilized to determine responsibly connected status.

This proposed rule has been determined not significant for purpose of Executive Order 12866 and, therefore, has not been reviewed by the Office of Management and Budget.

Executive Order 12778

This proposed rule has been reviewed under Executive Order 12778, Civil Justice Reform. If this rule is adopted: (1) All State and local laws and regulations that are in conflict with this rule will be preempted; (2) no retroactive effect will be given to this rule; and (3) administrative proceedings will not be required before parties may file suit in court challenging this rule.

Paperwork Reduction Act

The Paperwork Reduction Act of 1980 does not apply to this proposed rule since the proposed rule does not seek answers to identical questions or impose reporting or recordkeeping requirements on 10 or more persons, and the information collected is not used for general statistical purposes.

List of Subjects

7 CFR Part 1

Administrative practice and procedure, Agriculture, Antitrust, Blind, Claims, Concessions, Cooperatives, Equal access to justice, Federal buildings and facilities, Freedom of information, Lawyers, Privacy.

7 CFR Part 47

Administrative practice and procedure, Agricultural commodities, Brokers.

For the reasons, set out in the preamble 7 CFR chapter I is proposed to be amended as follows:

PART 1—ADMINISTRATIVE REGULATIONS

1. The authority citation for part 1, subpart H, would continue to read as follows:

Authority: 5 U.S.C. 301; 7 U.S.C. 61, 87e, 149, 150gg, 162, 163, 164, 228, 268, 490o, 608c(14), 1592, 1624(b), 2151, 2621, 2714, 2908, 3812, 4610, 4815, 4910; 15 U.S.C. 1828; 16 U.S.C. 620d, 1540(f), 3373; 21 U.S.C. 104, 111, 117, 120, 122, 127, 134e, 134f, 1135a, 154, 463(b), 621, 1043; 43 U.S.C. 1740; 7 CFR 2.35, 2.41.

§ 1.131 [Amended]

2. Section 1.131 would be amended as follows:

a. In paragraph (a), by adding ''1(9),'' immediately after ''Perishable Agricultural Commodities Act, 1930, sections'' and immediately before ''3(c)''.

3. Section 1.133 would be amended as follows:

a. In paragraph (b), by adding after ''*Filing of complaint*'' the words ''*or petition for review*''.

b. In paragraph (b), by redesignating paragraph (b)(2) as paragraph (b)(3), and

by adding the following new paragraph (b)(2):

§ 1.133 Institution of proceedings.

* * * * *

(b) * * *

(2) Any person determined by the Chief, PACA Branch, pursuant to 7 CFR 47.47 *et seq.* to have been responsibly connected within the meaning of 7 U.S.C. 499a(9) to a licensee who is subject or potentially subject to license suspension or revocation as the result of an alleged violation of 7 U.S.C. 499b or as provided in 7 U.S.C. 499g(d) shall be entitled to institute a proceeding under this section by filing with the Hearing Clerk a petition for review of such determination

* * * * *

4. Section 1.135 would be amended as follows:

a. In the section heading, by adding the words ''or petition for review'' after the word ''complaint'' and before the period.

b. By designating the text of current § 1.135 as paragraph (a), and by adding the paragraph heading ''*Complaint.*'' immediately after the designation of paragraph (a).

c. By adding the follow paragraph (b):

§ 1.135 Contents of complaint.

* * * * *

(b) *Petition for Review*. The Petition for Review of responsibly connected status shall describe briefly and clearly the determination sought to be reviewed and shall include a brief statement of the factual and legal matters that the petitioner believes warrant the reversal of the determination

§ 1.136 [Amended]

5. Section 1.136 would be amended as follows:

In paragraph (a), by adding after the last sentence the words ''As response to a petition for review of responsibly connected status, the Chief, PACA Branch, shall within ten days after service by the Hearing Clerk of a petition for review, file with the Hearing Clerk a certified copy of the agency record upon which the Chief, PACA Branch, made the determination that the individual was responsibly connected to a licensee under the perishable Agricultural Commodities Act, 7 U.S.C. 499a *et seq.*, and such agency record shall become part of the record in the review proceeding.''

6. Section 1.137 would be revised to read as follows:

§ 1.137. Amendment of complaint, petition for review, or answer; joinder of related matters.

(a) Amendment. At any time prior to the filing of a motion for hearing, the complaint, petition for review, answer, or response to petition for review may be amended. Thereafter, such an amendment may be made with consent of the parties, or as authorized by the Judge upon a showing of good cause.

(b) Joinder. Upon application of the Administrator made at any time, the judge shall consolidate for hearing with any proceeding brought to suspend or revoke a license granted under the Perishable Agricultural Commodities Act, 7 U.S.C. 499a *et seq.*, any petitions for review of determination of status by the Chief, PACA Branch, that individuals are responsibly connected, within the meaning of 7 U.S.C. 499a(9), to the licensee during the period of the alleged violations. In any case in which there is no pending proceeding to suspend or revoke the license of a licensee issued under the Perishable Agricultural Commodities Act, 7 U.S.C. 499a *et seq.*, but there have been filed more than one petition for review of determination of responsible connection to the same licensee, such petitions for review shall be consolidated for hearing upon motion by the Administrator.

7. Section 1.141 would be amended as follows:

a. By adding after the first sentence of paragraph (a) the following additional sentence: ''A petition for review shall be deemed a request for a hearing.''

b. By designating the text of current paragraph (e) as paragraph (e)(1), and by adding the following new paragraph (e)(2):

§ 1.1411 Procedure for hearing.

* * * * *

(e) * * *

(2) If the petitioner in the case of a Petition for Review of a determination of responsibly connected status within the meaning of 7 U.S.C. 499a(9), having been duly notified, fails to appear at the hearing without good cause, such petitioner shall be deemed to have waived his right to a hearing and to have voluntary withdrawn his petition for review.

* * * * *

PART 47—RULES OF PRACTICE UNDER THE PERISHABLE AGRICULTURAL COMMODITIES ACT

8. The authority citation for part 47 would continue to read follows:

Authority: 7 U.S.C. 499o; 7 CFR 2.17(a)(8)(xiii), 2.50 (a)(8)(xiii).

9. Section 47.47 would be revised to read as follows:

§ 47.47 Additional definitions.

The following definitions, which are in addition to those in 7 CFR 47.2 (a) through (h), shall be applicable to proceedings under 7 CFR 47.47 through 47.49.

(a) *Chief* means the Chief of the PACA Branch, or any officer or employee to whom authority has heretofore lawfully been delegated or to whom authority may hereafter lawfully be delegated by the Chief, to act in such capacity.

(b) *PACA Branch* means the PACA Branch of the Division.

(c) *Petition for review* means the document filed requesting review by an Administrative Law Judge of the Chief's determination.

§ 47.49 [Amended]

10. Section 47.49 would be amended as follows:

a. The words ''Regulatory Branch'' would be removed each time they occur and the words ''PACA Branch'' would be added in their place.

b. Paragraph (d) of § 47.49 would be amended by removing all words appearing after ''may file'' and adding in their place the words ''with the Hearing Clerk, pursuant to § 1.130 *et seq.* of this chapter, a petition for review of the determination.''

c. Paragraphs (e) and (f) would be removed.

§ 47.50 through 47.68 [Removed]

11. Sections 47.50 through 47.68 would be removed.

Done in Washington, D.C. this 20th day of June, 1995.

Dan Glickman,

Secretary of Agriculture.

[FR Doc. 95–15817 Filed 6–30–95; 8:45 am]

BILLING CODE 3410–01–M

DEPARTMENT OF THE TREASURY

Office of the Comptroller of the Currency

12 CFR Part 21

[Docket No. 95–14]

RIN 1557–AB19

Minimum Security Devices and Procedures, Reports of Crimes and Suspected Crimes, and Bank Secrecy Act Compliance

AGENCY: Office of the Comptroller of the Currency, Treasury.

ACTION: Notice of proposed rulemaking.

SUMMARY: The Office of the Comptroller of the Currency (OCC), as part of its Regulation Review Program, is proposing to revise its regulation on minimum security devices and procedures for banks, reports of crimes and suspected crimes, and Bank Secrecy Act (BSA) compliance. This proposal implements a new interagency suspicious activity referral process and updates and clarifies various portions of the underlying reporting regulation. The proposal also reduces substantially the burden on banks in reporting suspicious activities while enhancing access to such information by the Federal law enforcement agencies, the Federal financial institutions supervisory agencies, and Treasury.

DATES: Comments must be received by September 1, 1995.

ADDRESSES: Comments should be sent to: Communications Division, Office of the Comptroller of the Currency, 250 E Street SW, Washington, DC 20219, Attention Docket No. 95–14; or FAX number 202–874–5274. Comments will be available for public inspection and photocopying at the same location.

FOR FURTHER INFORMATION CONTACT: Robert S. Pasley, Assistant Director, or Neil M. Robinson, Senior Attorney, Enforcement and Compliance Division, (202/874–4800), or Daniel Cooke, Attorney, Legislative and Regulatory Activities Division (202/874–5090).

SUPPLEMENTARY INFORMATION:

Background

The Federal financial institutions supervisory agencies (the Agencies)[1] and the Department of the Treasury[2] (Treasury) are responsible for ensuring that financial institutions apprise Federal law enforcement authorities of any known or suspected violation of a Federal criminal statute and of any suspicious financial transaction. Suspicious financial transactions, which will be the subject of regulations and other guidance to be issued by Treasury, can include transactions that the bank suspects involve funds derived from illicit activities, were conducted for the purpose of hiding or disguising funds from illicit activity, otherwise violated the money laundering statutes (18 U.S.C. 1956 and 1957), were potentially designed to evade the reporting or recordkeeping requirements of the BSA (31 U.S.C. 5311 through 5330), and transactions that the bank believes were suspicious for any other reason.

Fraud, abusive insider transactions, check kiting schemes, money laundering, and other crimes can pose serious threats to a financial institution's continued viability and, if unchecked, can undermine the public confidence in the nation's financial industry. The Agencies and Federal law enforcement agencies need to receive timely and detailed information regarding suspected criminal activity to determine whether investigations, administrative actions, or criminal prosecutions are warranted.

An interagency Bank Fraud Working Group (BFWG), consisting of representatives from many Federal agencies, including the Agencies and law enforcement agencies, was formed in 1984. The BFWG addresses substantive issues, promotes cooperation among the Agencies and Federal and State law enforcement agencies, and improves the Federal government's response to white collar crime in financial institutions. It is under the auspices of the BFWG that the revisions to this regulation and the reporting requirements are being made.

Suspicious Activity Report

The Agencies have been working on a project to improve the criminal referral process, to reduce unnecessary reporting burdens on banks, and to eliminate confusion associated with the current duplicative reporting of suspicious financial transactions in criminal referral forms and currency transaction reports (CTRs). Contemporaneously, Treasury analyzed the need to implement the procedures for reporting suspicious financial transactions by banks following the enactment of the Annuzio-Wylie Anti-Money Laundering Act of 1992. As a result of these reviews, the Agencies and Treasury approved the development of a new referral process that includes suspicious financial transaction reporting.

To implement the reporting process, and to reduce unnecessary burdens associated with these various reporting requirements, the Agencies and FinCEN developed a new report form for reporting known or suspected Federal criminal law violations and suspicious financial transactions. The new form is designated the Suspicious Activity Report (SAR). The SAR is a simplified and shortened version of its predecessors. The new referral process and the SAR reduce the burden on national banks for reporting known or suspected violations and suspicious financial transactions. The Agencies anticipate that the new process will be operational by October 1995.

Proposal

The OCC proposes to revise 12 CFR part 21 as part of its Regulation Review Program by updating and clarifying the current rule governing the filing of criminal referral reports, expanding the rule to cover suspicious financial transactions, implementing the new SAR, and eliminating current confusing and overly burdensome reporting requirements. This action should improve reporting of known or suspected violations and suspicious financial transactions relating to Federally insured financial institutions while providing uniform data for entry into the new interagency computer database. The OCC expects that each of the other Agencies will be making substantially similar changes contemporaneously.

Subpart B—Suspicious Activity Reports

The principal proposed changes to the OCC's current criminal referral reporting rules are discussed below in the summary of the proposed rule's paragraphs. Of particular note are the following: (1) Raising the mandatory reporting thresholds for criminal offenses, thereby reducing unnecessary reporting burdens; (2) filing only one form with a single repository, rather than submitting multiple copies with several Federal law enforcement and the Agencies, thereby further reducing reporting burdens; and (3) melding the criminal referral and suspicious financial transactions reporting requirements of the Agencies and Treasury into one uniform reporting system, thereby eliminating duplicative referrals.

The subpart heading has been changed to conform to the name on the SAR. The current subpart is titled ''Reports of Crimes and Suspected Crimes.'' The proposed subpart heading, ''Suspicious Activity Reports,'' conforms to the name of the report.

Section 21.11(a) Purpose and Scope

The proposal clarifies the scope of the current rule. Under the proposal, the SAR replaces the various criminal referral forms that the Agencies currently require banks to file; and a bank also will file a SAR instead of a CTR to report a suspicious financial transaction.[3]

[1] The Federal financial institutions supervisory agencies are the OCC, the Office of Thrift Supervision, the Board of Governors of the Federal Reserve System, the Federal Deposit Insurance Corporation, and the National Credit Union Administration.

[2] Through its Financial Crimes Enforcement Network (FinCEN).

[3] The BSA requires all financial institutions to file CTRs in accordance with the Department of the Treasury's implementing regulations (31 CFR part 103). Part 103 requires a national bank to file a CTR

Continued

Combining suspicious financial transaction reporting and criminal referral reporting should reduce confusion, increase the accuracy and efficiency of reporting, and reduce the burden on banks in reporting known or suspected violations, including suspicious financial transactions.

Section 21.11(b) Definitions

Proposed § 21.11(b) defines the following terms: ''FinCEN,'' ''institution-affiliated party,'' ''instructions,'' ''known or suspected violation,'' and ''SAR.'' The definitions should make the rule easier to interpret and apply.

In particular, the definition of a ''known or suspected violation'' refers to any matter for which a national bank has a basis to believe that a violation of any Federal criminal statute has occurred, has been attempted, is occurring, or may occur, coupled with a basis to believe that a national bank was an actual or potential victim of the criminal violation, involved in, or used to facilitate the criminal violation. The definition supplants current § 21.11(i), which explains the term ''suspected.''

Section 21.11(c) Reports Required

Proposed § 21.11(c), which replaces current § 21.11(b), clarifies and expands the provision that requires a bank to file a completed SAR. This provision raises the dollar thresholds that trigger a filing requirement. It also modifies the scope of events that a national bank must report by using the new term ''known, or suspected violation,'' which is defined at § 21.11(b)(4), and by requiring that a national bank file a SAR to report a suspicious financial transaction.

Under the current rule, the OCC requires a bank to file a criminal referral form with many different Federal agencies. The proposal, which replaces all other requirements for filing criminal referrals and suspicious financial transactions, requires a bank to file only a single SAR at one location, rather than the multiple copies of the criminal referral form that must now be filed with various Federal agencies.

Under proposed § 21.11(c), a national bank effectively files a SAR with all appropriate Federal law enforcement agencies by sending a single copy of the SAR to FinCEN, whose address will be printed on the SAR.

FinCEN will input the information contained on the SARs into a newly created database that FinCEN will maintain. This process meets the regulatory requirement that a bank refer any known or suspected criminal violation to the various Federal law enforcement agencies. The database will enhance Federal law enforcement and supervisory agencies' ability to track, investigate, and prosecute individuals suspected of violating Federal criminal law.

This change ensures that all SARs are placed in the database at FinCEN and that the information is made available on computer to the appropriate law enforcement and supervisory agencies as quickly as possible. This change will reduce the filing burdens of national banks.

The proposal removes § 21.11(b)(1), which now requires national banks to report any mysterious disappearance or unexplained shortage of bank funds, because it would be redundant in light of proposed § 21.11(c)(3). In instances where criminal activity is suspected in connection with any disappearance or shortage of bank funds, § 21.11(c)(3) requires a national bank to file a SAR.

The proposal modifies current § 21.11(b)(2), which requires reporting of known or suspected criminal activity involving bank insiders. The proposal replaces current § 21.11(b)(2) with 21.11(c)(1) and describes suspects who are bank personnel more precisely. Specifically, the proposal replaces ''responsible bank personnel'' with ''directors, officers, employees, agents, or other institution-affiliated parties.'' The proposal, however, does not change the requirement that a bank file a SAR, regardless of the dollar amount involved, whenever it has a substantial basis for believing that a bank insider has violated a Federal criminal statute.

The proposal modifies current § 21.11(b)(3), which requires reporting of known or suspected criminal activity when a bank has a substantial basis for identifying a non-insider suspect where bank funds or other assets involve or aggregate $1,000 or more. Proposed § 21.11(c)(2), which replaces current § 21.11(b)(3), raises the reporting threshold to $5,000.

The proposal also modifies current § 21.11(b)(4), which requires banks to report any known or suspected criminal violation involving $5,000 or more where the bank has no substantial basis for identifying a suspect. Specifically, proposed § 21.11(c)(3), which replaces current § 21.11(b)(4), raises the dollar reporting threshold from $5,000 to $25,000.

Proposed § 21.11(c)(4) requires a national bank to report any financial transaction, regardless of the dollar amount, that: (1) the bank suspects involved funds derived from illicit activity, was conducted for the purpose of hiding or disguising funds from illicit activity, or in any way violated the money laundering statutes (18 U.S.C. 1956 and 1957); (2) the bank suspects was potentially designed to evade the reporting or recordkeeping requirements of the BSA (31 U.S.C. 5311 through 5330); or (3) the bank believes to be suspicious for any reason.

Section 21.11(d) Time for Reporting

Proposed § 21.11(d), which replaces current § 21.11(c), sets forth the time requirements a bank must meet when filing a SAR. The proposal does not substantively change the current requirements.

Under current § 21.11(e), ''Manner of Reporting,'' a bank may file the appropriate criminal referral form in several ways, including submitting a photocopy or facsimile of the appropriate form. Under the proposal, a bank may file a SAR by photocopy and also by magnetic means, such as by a computer disk. However, FinCEN will not be able to receive SARs by facsimile machine. In the future, the OCC anticipates that a bank will be able to file a SAR electronically.

The Agencies, working with FinCEN, are developing computer software to assist banks in preparing and filing SARs. The software will allow a bank to complete a SAR, to save the SAR on its computers, and to print a hard copy of the SAR for its own records. The computer software will also enable a bank to file a SAR using various forms of magnetic media, such as computer disk or magnetic tape. The OCC will make the software available to all national banks. A bank, of course, may complete and file a SAR using a printed form, without using this software, if it so desires.

Because the permitted methods of filing the SAR may change, the OCC has removed current § 21.11(e). The permissible methods of filing the SAR will be stated in the instructions to the SAR.

Section 21.11(e) Reports to State and Local Authorities

Proposed § 21.11(e), which replaces current § 21.11(d), modifies the scope of this provision slightly. Proposed § 21.11(e) encourages national banks to file SARs with State and local law enforcement agencies where appropriate. Proposed § 21.11(e)

---

whenever a currency transaction exceeds $10,000. If a currency transaction exceeds $10,000 and is suspicious, the bank, under these new requirements, will file both a CTR (reporting the currency transaction) and a SAR (reporting the suspicious criminal aspect of the transaction). If a currency transaction equals or is below $10,000 but is suspicious, the bank will only file a SAR.

removes the unnecessary reference to Federal law.

Section 21.11(f) Retention of Records

Proposed § 21.11(f) requires a bank to retain a copy of the SAR and the original of any related documentation relating to a SAR for a period of ten years. The current rule is silent on this issue. However, the current criminal referral forms require a bank to submit copies of all related documentation when it files a criminal referral.

The new SAR reduces this burden by eliminating altogether the requirement to submit underlying documentation in connection with a criminal referral. Instead, the proposal requires that the documentation be identified and treated as filed with the SAR and that the bank maintain the documentation, along with a copy of the SAR, for ten years from the submission date. This time frame corresponds with the statutes of limitations for most Federal criminal statutes involving financial institutions.

This approach ensures that Federal law enforcement agencies and the Agencies, upon request, have access to any documentation necessary to prosecute a violation or pursue an administrative action by requiring banks to preserve underlying documentation for ten years.

Section 21.11(g) Exemptions

Proposed § 21.11(g), which replaces current § 21.11(f), does not substantively revise this provision.

Section 21.11(h) Notification of the Board of Directors

Proposed § 21.11(h), which replaces current § 21.11(g), reduces the burden the current rule places on boards of directors to review criminal referrals. Under the current rule, each national bank must have procedures that ensure that the bank's board of directors is notified of each criminal referral before the next board meeting.

The proposal does not require a bank to have specific procedures for notifying its board of directors of a SAR. In addition, the proposal permits the management of the bank to notify either the board of directors or a committee of directors or executive officers designated by the board to receive notice of the filing of a SAR.

The OCC intends that each national bank maintain appropriate mechanisms to ensure that its board of directors can be informed promptly of SARs when appropriate. However, the OCC recognizes that board review of all SAR filings is impracticable in some cases. Therefore, under the proposal, the OCC gives each bank discretion to establish reporting systems appropriate for the particular institution.

The proposal also ensures, however, that if the bank elects to provide notice to a committee rather than the entire board, the bank may not give notice of a SAR filing to any director or officer who is a suspect in the known or suspected violation. The proposal also requires management to notify the entire board of directors, except the suspect, when an executive officer or director is a suspect.

Section 21.11(i) Compliance

The proposal changes the heading of the paragraph from ''Penalties'' to ''Compliance'' to reflect better the range of informal and formal supervisory actions available to the Agencies. The proposal clarifies that the OCC treats a national bank's failure to comply with reporting requirements like any other violation of law or regulation, which may result in supervisory actions, including enforcement actions. The current rule, at § 21.11(h) (*Penalties*), appears to set a standard for penalties (willful failure to file or careless disregard in filing reports), that is inconsistent with the applicable statutory standard for violation of an agency regulation. This proposed change conforms the OCC's rules with the rules of the Board of Governors of the Federal Reserve System and the Federal Deposit Insurance Corporation.

Section 21.11(j) Obtaining the SAR

Proposed § 21.11(j) states that SARs may be obtained from the appropriate OCC District Office at the address listed in 12 CFR part 4. The current rule does not contain a comparable instruction.

Section 21.11(k) Confidentiality of SARs

The proposal preserves the confidential nature of criminal referral reports by stating that a SAR and the information contained in a SAR are confidential.

Comments

The OCC invites public comment on all aspects of this proposal.

DERIVATION TABLE FOR 12 CFR PART 21

This table directs readers to the provisions of the current 12 CFR part 21.11 on which the revised 12 CFR part 21.11 is based.

Revised provision	Current provision	Comments
§ 21.11(a)	§ 21.11(a)	Modified.
§ 21.11(b)(1)	- - -	Added.
§ 21.11(b)(2)	- - -	Added.
§ 21.11(b)(3)	- - -	Added.
§ 21.11(b)(4)	Derived in part from § 21.11(i)	Added.
§ 21.11(b)(5)	- - -	Added.
§ 21.11(c)(1)	§ 21.11(b)(2)	Modified.
§ 21.11(c)(2)	§ 21.11(b)(3)	Modified.
§ 21.11(c)(3)	§ 21.11(b)(1) & (4)	Modified.
§ 21.11(c)(4)	Derived in part from the OCC's current criminal referral forms	Added.
§ 21.11(d)(1)	§ 21.11(c)(1) & (3)	Modified.
§ 21.11(d)(2)	§ 21.11(c)(2)	Modified.
§ 21.11(e)	§ 21.11(d)	Modified.
§ 21.11(f)	- - -	Added.
§ 21.11(g)(1)	§ 21.11(f)(1)	Modified.
§ 21.11(g)(2)	§ 21.11(f)(2)	Modified.
§ 21.11(h)(1)	§ 21.11(g)	Modified.
§ 21.11(h)(2)	- - -	Added.
§ 21.11(i)	§ 21.11(h)	Modified.
§ 21.11(j)	- - -	Added.
§ 21.11(k)	- - -	Added.

Regulatory Flexibility Act

Pursuant to section 605(b) of the Regulatory Flexibility Act, the OCC hereby certifies that this proposed rule will not have a significant economic impact on a substantial number of small entities. This proposal primarily reorganizes the process for making criminal referrals and has no material impact on national banks, regardless of size. Accordingly, a regulatory flexibility analysis is not required.

Paperwork Reduction Act

The collection of information contained in this notice of proposed rulemaking have been submitted to the Office of Management and Budget for review in accordance with the Paperwork Reduction Act of 1980 (PRA) (44 U.S.C. 3504(h)). Comments on the collection of information should be sent to the Office of Management and Budget (OMB), Paperwork Reduction Project (1557–0180), Washington, DC 20503, with copies to the Legislative and Regulatory Activities Division (1557–0180), Office of the Comptroller of the Currency, 250 E Street, SW, Washington, DC 20219.

The collection of information in this proposed rule is limited to the retention of records and is found in 12 CFR 21.11(f), which requires national banks to retain copies of all documentation supporting a SAR for ten years. The SAR will be submitted to OMB separately for PRA review. The OCC requires banks to retain this information to ensure that law enforcement and supervisory agencies have access to the documentation necessary to prosecute a violation or pursue an administrative action. The likely respondents are banks.

Estimated total annual recordkeeping burden: 5,400 hours.

The estimated annual burden per recordkeeper varies from less than one hour to 1,300 burden hours, depending on individual circumstances, with an average of 1.8 hours.

Estimated number of recordkeepers: 3,000.

Executive Order 12866

The OCC has determined that this document is not a significant regulatory action under Executive Order 12866.

Unfunded Mandates Act of 1995 Statement

Section 202 of the Unfunded Mandates Reform Act of 1995, Public Law 104–4 (Unfunded Mandates Act) (signed into law on March 22, 1995) requires that an agency prepare a budgetary impact statement before promulgating a rule that includes a Federal mandate that may result in expenditure by State, local, and tribal governments, in the aggregate, or by the private sector, of $100 million or more in any one year. If a budgetary impact statement is required, section 202 of the Unfunded Mandates Act also requires an agency to identify and consider a reasonable number of regulatory alternatives before promulgating a rule. The OCC has determined that it is not required to prepare a written statement under section 202 and has concluded that, on balance, this proposal provides the most cost-effective and least burdensome alternative to achieve the objectives of the rule.

List of Subjects in 12 CFR Part 21

Bank Secrecy Act, Check kiting, Criminal referrals, Criminal transactions, Currency, Defalcations, Embezzlement, Insider abuse, Money laundering, National banks, Reporting and recordkeeping requirements, Security measures, Theft.

Authority and Issuance

For the reasons set out in the preamble, part 21 of chapter I of title 12 of the Code of Federal Regulations is proposed to be amended to read as follows:

PART 21—MINIMUM SECURITY DEVICES AND PROCEDURES, REPORTS OF SUSPICIOUS ACTIVITIES, AND BANK SECRECY ACT COMPLIANCE PROGRAM

1. The heading for part 21 is revised as set forth above.

2. The authority citation for part 21 continues to read as follows:

Authority: 12 U.S.C. 93a, 1818, 1881–1884, and 3401–3422.

3. Subpart B of part 21 is revised to read as follows:

Subpart B—Reports of Suspicious Activities

§ 21.11 Suspicious Activity Report.

(a) *Purpose and scope.* This section ensures that national banks file a Suspicious Activity Report when they detect a known or suspected violation of Federal law or a suspicious financial transaction. This section applies to all national banks as well as any Federal branches and agencies of foreign banks licensed or chartered by the OCC.

(b) *Definitions.* For the purposes of this section:

(1) *FinCEN* means the Financial Crimes Enforcement Network of the Department of the Treasury.

(2) *Institution-affiliated party* means any institution-affiliated party as that term is defined in sections 3(u) and 8(b)(5) of the Federal Deposit Insurance Act (12 U.S.C. 1813(u) and 1818(b)(5)).

(3) *Instructions* means the instructions on the SAR.

(4) *Known or suspected violation* means any matter for which there is a basis to believe that a violation of a Federal criminal statute (including a pattern of criminal violations) has occurred or has been attempted, is occurring, or may occur, and there is a basis to believe that a national bank was an actual or potential victim of the criminal violation, involved in, or used to facilitate the criminal violation.

(5) *SAR* means a Suspicious Activity Report.

(c) *SARs required.* A national bank shall file a SAR with the appropriate Federal law enforcement agencies and Treasury and in accordance with the Instructions, by sending a completed SAR to FinCEN in the following circumstances:

(1) Whenever the national bank detects a known or suspected violation of Federal criminal law and has a substantial basis to believe that one of its directors, officers, employees, agents, or other institution-affiliated parties committed or aided in the commission of the violation;

(2) Whenever the national bank detects a known or suspected violation of Federal criminal law, there is an actual or potential loss to the national bank (before reimbursement or recovery) aggregating $5,000 or more, and the bank has a substantial basis for identifying a possible suspect or group of suspects, where none of the suspects are included in paragraph (c)(1) of this section;

(3) Whenever the national bank detects a known or suspected violation of Federal criminal law, there is an actual or potential loss to the national bank (before reimbursement or recovery) aggregating $25,000 or more, and the bank has no substantial basis for identifying a possible suspect or group of suspects; or

(4) Whenever a financial transaction is conducted, or attempted, at the national bank and:

(i) The bank suspects that the transaction involved funds derived from illicit activity, was conducted for the purpose of hiding or disguising funds from illicit activity, or in any way violated the money laundering statutes (18 U.S.C. 1956 and 1957);

(ii) The bank suspects that the transaction was potentially designed to evade the reporting or recordkeeping requirements of the Bank Secrecy Act (31 U.S.C. 5311 through 5330) or regulations issued thereunder; or

(iii) The bank believes that the transaction was suspicious for any reason.

(d) *Time for reporting.*—(1) *Generally.* A national bank shall file the SAR required by paragraph (c) of this section within 30 calendar days after the date of initial detection of an act described in paragraph (c) of this section, and, in situations involving violations requiring immediate attention, such as when a reportable violation is on-going, the financial institution shall immediately notify, by telephone, the appropriate law enforcement authority in addition to filing a timely SAR.

(2) *No suspect identified.* If no suspect was identified on the date of detection of an act described in paragraph (c) of this section, the national bank may delay filing a SAR for an additional 30 calendar days after identification of a suspect, but in no case may a national bank delay filing a SAR more than 60 calendar days after the date of detecting an act described in paragraph (c) of this section.

(e) *Reports to State and local authorities.* A national bank is encouraged to file a copy of the SAR with State and local law enforcement agencies where appropriate.

(f) *Retention of records.* A national bank shall maintain a copy of any SAR filed and the original of any related documentation for a period of ten years from the date of filing the SAR, unless the OCC informs the bank in writing that the bank may discard the materials sooner. A national bank shall make all supporting documentation available to appropriate law enforcement agencies upon request. Supporting documentation shall be identified and treated as filed with the SAR.

(g) *Exemptions.* (1) A bank need not file a SAR for a robbery or burglary committed or attempted that is reported to appropriate law enforcement authorities.

(2) A bank need not file a SAR for lost, missing, counterfeit, or stolen securities if it files a report pursuant to the reporting requirements of 17 CFR 240.17f-1.

(h) *Notification to board of directors*—(1) *Generally.* Whenever a national bank files a SAR pursuant to this section, the management of the bank shall promptly notify its board of directors, or a committee of directors or executive officers designated by the board of directors to receive notice.

(2) *Suspect is a director or executive officer.* If the bank files the SAR pursuant to paragraph (c) of this section and the suspect is a director or executive officer, the bank may not notify the suspect, pursuant to 31 U.S.C. 5318(g)(2), but shall notify all directors who are not suspects.

(i) *Compliance.* Failure to file a SAR in accordance with this section and the Instructions may subject the national bank, its directors, officers, employees, agents, or other institution-affiliated parties to supervisory actions including enforcement actions.

(j) *Obtaining SARs.* A national bank may obtain SARs and the Instructions from the appropriate OCC District Office listed in 12 CFR part 4.

(k) *Confidentiality of SARs.* SARs are confidential. Any person subpoenaed or otherwise requested to disclose a SAR or the information contained in a SAR shall decline to produce the information citing this section, applicable law (*e.g.*, 31 U.S.C. 5318(g)), or both.

Dated: June 27, 1995.

Eugene A. Ludwig,

Comptroller of the Currency.

[FR Doc. 95–16240 Filed 6–30–95; 8:45 am]

BILLING CODE 4810–33–P

FEDERAL RESERVE SYSTEM

12 CFR Parts 208, 211, and 225

[Regulations H, K, and Y; Docket No. R–0885]

Membership of State Banking Institutions in the Federal Reserve System; International Banking Operations; Bank Holding Companies and Change in Bank Control

AGENCY: Board of Governors of the Federal Reserve System.

ACTION: Notice of proposed rulemaking.

SUMMARY: The Board of Governors of the Federal Reserve System (the Board) is proposing to revise its regulations on reporting of suspicious activities by the domestic and foreign banking organizations supervised by the Federal Reserve, including the reporting of suspicious financial transactions such as suspected violations of the Bank Secrecy Act (BSA). As proposed, these rules implement a new interagency suspicious activity referral process. The rules also reduce substantially the burden on banking organizations in reporting suspicious activities while enhancing access to such information by the Federal law enforcement agencies, the Federal financial institutions supervisory agencies and the Department of the Treasury.

DATES: Comments must be received on or before September 1, 1995.

ADDRESSES: Comments should refer to Docket No, R–0885, and may be mailed to William W. Wiles, Secretary, Board of Governors of the Federal Reserve System, 20th and Constitution Avenue, NW., Washington, DC 20551. Comments also may be delivered to Room B–2222 of the Eccles Building between 8:45 a.m. and 5:15 p.m. weekdays, or to the guard station in the Eccles Building courtyard on 20th Street, NW (between Constitution Avenue and C Street) at any time. Comments received will be available for inspection in Room MP–500 of the Martin Building between 9 a.m. and 5 p.m. weekdays, except as provided in 12 CFR 261.8 of the Board's rules regarding availability of information.

FOR FURTHER INFORMATION CONTACT: Herbert A. Biern, Deputy Associate Director, Division of Banking Supervision and Regulation, (202) 452–2620, or Richard A. Small, Special Counsel, Division of Banking Supervision and Regulation, (202) 452–5235; for the hearing impaired *only* contact Dorothea Thompson, Telecommunication Device for the Deaf, (202) 452–3544, Board of Governors of the Federal Reserve System, 20th Street and Constitution Avenue, NW., Washington, DC 20551.

SUPPLEMENTARY INFORMATION:

Background

The Federal financial institutions supervisory agencies (the Agencies)[1] and the Department of the Treasury (the Treasury)[2] are responsible for ensuring that financial institutions apprise Federal law enforcement authorities of any known or suspected violation of a Federal criminal statute and of any suspicious financial transaction. Suspicious financial transactions, which will be the subject of regulations and other guidance to be issued by the Treasury, can include transactions that the banking organization suspects involved funds derived from illicit activities, were conducted for the purpose of hiding or disguising funds from illicit activity, in any way violated the Federal money laundering statutes (18 U.S.C. 1956 and 1957), were potentially designed to evade the reporting or recordkeeping requirements of the BSA (31 U.S.C. 5311 through 5330), and transactions that the bank believes were suspicious for any other reason.

Fraud, abusive insider transactions, check kiting schemes, money

[1] The Federal financial institutions supervisory agencies are the Board, the Office of the Comptroller of the Currency, the Office of Thrift Supervision, the Federal Deposit Insurance Corporation, and the National Credit Union Administration.

[2] Through Treasury's Financial Crimes Enforcement Network (FinCEN).

laundering, and other crimes can pose serious threats to a financial institution's continued viability and, if unchecked, can undermine the public confidence in the nation's financial industry. The Agencies and Federal law enforcement agencies need to receive timely and detailed information regarding suspected criminal activity to determine whether investigations, administrative actions, or criminal prosecutions are warranted.

An interagency Bank Fraud Working Group (BFWG), consisting of representatives from many Federal agencies, including the Agencies and law enforcement agencies such as the U.S. Department of Justice and the Federal Bureau of Investigation, was formed in 1984. The BFWG addresses substantive issues, promotes cooperation among the Agencies and Federal and state law enforcement agencies, and improves the Federal government's response to white collar crime in financial institutions. It is under the auspices of the BFWG that the revisions to these regulations and the reporting requirements are being made.

Suspicious Activity Report

The Agencies have been working on a project to improve the criminal referral process, to reduce the reporting burden on banking organizations, and to eliminate confusion associated with the current duplicative reporting of suspicious financial transactions in criminal referral forms and currency transactions reports (CTRs). Contemporaneously, the Treasury analyzed the need to implement the procedures for reporting suspicious financial transactions by banks following the enactment of the Annunzio-Wylie Anti-Money Laundering Act of 1992. As a result of these reviews, the Agencies and Treasury approved the development of a new referral process that includes suspicious financial transaction reporting.

To implement the reporting process and to reduce unnecessary burdens associated with these various reporting requirements, the Agencies and FinCEN developed a new form for reporting known or suspected Federal criminal law violations and suspicious financial transactions. The new form is designated the Suspicious Activity Report (SAR). The new referral process and the SAR reduce the burden on financial institutions for reporting known or suspected violations and suspicious financial transactions. The Agencies anticipate that the new process will be instituted by October, 1995.

Proposal

The Board proposes to revise 12 CFR Parts 208, 211, and 225 by updating the current rules governing the filing of criminal referral reports; expanding the rules pertinent to the activities of state member banks, bank holding companies and their nonbank subsidiaries, Edge and Agreement corporations, and the U.S. branches and agencies of foreign banks to cover suspicious financial transactions; implementing the new SAR; and eliminating overly burdensome reporting requirements. This action should improve reporting of known or suspected violations and suspicious financial transactions relating to financial institutions while providing uniform data for entry into a new interagency computer database. The Board expects that each of the other Agencies will be making substantially similar changes to their criminal referral rules contemporaneously.

The principal proposed changes to the Board's current criminal referral reporting rules are discussed below. They include the following notable changes: (i) simplifying and shortening the referral form; (ii) raising the mandatory reporting thresholds for criminal offenses, thereby reducing banking organizations' reporting burdens; (iii) filing only one form with a single repository, rather than submitting multiple copies to several Federal law enforcement and banking agencies, thereby further reducing reporting burdens; and (iv) clarifying the criminal referral and suspicious financial transaction reporting requirements of the Agencies and Treasury associated with suspicious financial transactions, thereby eliminating confusion concerning the filing of referrals related to suspicious financial transactions of less than $10,000 and eliminating duplicative referrals.

The proposal also involves the manner in which financial institutions file a SAR. In following the instructions on a SAR, banking organizations may file the referral form in several ways, including submitting an original form or a photocopy, and they may file a SAR by magnetic means, such as by a computer disk. In the future, the Board and the other Agencies anticipate that a banking organization will be able to file a SAR electronically.

The Agencies, working with FinCEN, are developing computer software to assist financial institutions in preparing and filing SARs. The software will allow a banking organization to complete a SAR, to save the SAR on its computers, and to print a hard copy of the SAR for its own records. The computer software will also enable a financial institution to file a SAR using various forms of magnetic media, such as computer disk or magnetic tape. The Board will make the software available to all domestic and foreign banking organizations it supervises.

The changes are being made to § 208.20 of Regulation H of the Board (12 CFR 208.20) relating to the criminal referral reporting responsibilities of state member banks. Sections 211.8 and 211.24(f) of Regulation K of the Board and § 225.4(f) of Regulation Y of the Board make § 208.20 of Regulation H of the Board applicable to Edge and Agreement corporations, the U.S. branches and agencies of foreign banks (except a Federal branch or Federal agency or a state branch that is insured by the Federal Deposit Insurance Corporation), a representative office of a foreign bank, and bank holding companies and their nonbank subsidiaries, respectively. This means that the changes applicable to state member banks discussed below will also be applicable to the suspicious activity reporting responsibilities of all of the other domestic and foreign banking organizations supervised by the Federal Reserve, including bank holding companies, Edge corporations, and the U.S. branches and agencies of foreign banks. The only modifications being made to the current provisions of §§ 211.8 and 211.24(f) of Regulation K, and § 225.4(f) of Regulation Y are changes to the name of form—from ''criminal referral form'' to a SAR—and a change in the heading of § 225.4(f) of Regulation Y to ''Suspicious Activity Report'' from ''Criminal referral report.''

Section 208.20(a) Purpose

The proposal clarifies the scope of the current rule. Under the proposal, the SAR replaces the various criminal referral forms that the Agencies currently require banking organizations to file. Also a state member bank or other type of financial institution files a SAR instead of a currency transaction report (CTR) to report a suspicious financial transaction involving less than $10,000 in currency.[3]

[3] The BSA requires all financial institutions to file CTRs in accordance with the Treasury's implementing regulations (31 CFR Part 103). Part 103 requires a bank to file a CTR whenever a currency transaction exceeds $10,000. If a currency transaction exceeds $10,000 and is suspicious, the state member bank, under these new requirements, will file both a CTR (reporting the currency transaction) and a SAR (reporting the suspicious criminal aspect of the transaction). If a currency transaction equals or is below $10,000 but is suspicious, the bank will only file a SAR.

Combining suspicious financial transaction reporting and criminal referral reporting should reduce confusion, increase the accuracy and efficiency of reporting, and reduce the burden on financial institutions in reporting known or suspected violations, including suspicious financial transactions.

Section 208.20(b) Definitions

In addition to the current definition of ''institution-affiliated party'' set forth at 12 CFR 208.20(b), the proposed § 208.20(b) defines the following terms: ''FinCEN'' and ''SAR.'' The definitions should make the rule easier to interpret and apply.

Section § 208.20(c) Reports Required

Proposed § 208.20(c), which replaces the current subsection, clarifies and expands the provision that requires a state member bank to file a SAR. This provision raises the dollar thresholds that trigger a filing requirement. It also modifies the scope of events that a state member bank must report by requiring that a bank file a SAR to report a suspicious financial transaction.

Under the current rule, the Board requires a state member bank to file a criminal referral form with many different Federal agencies. The proposal, which replaces all other requirements for filing criminal and suspicious financial transaction referrals, requires a bank to file only a single SAR at one location, rather than the multiple copies of the criminal referral form that must now be filed with various Federal agencies.

Under proposed § 208.20(c), a state member bank effectively files a SAR with all appropriate Federal law enforcement agencies by sending a single copy of the SAR to FinCEN, whose address will be printed on the SAR.

FinCEN will input the information contained on the SARs into a newly created database that FinCEN will maintain. This process meets the regulatory requirement that a banking organization refer any known or suspected criminal violation to the various Federal law enforcement agencies. The database will enhance Federal law enforcement and bank supervisory agencies' ability to track, investigate, and prosecute, criminally, civilly, and administratively, individuals and entities suspected of violating Federal criminal law.

This change ensures that all SARs are placed in the database at FinCEN and that the information is made available on computer to the appropriate law enforcement and supervisory agencies as quickly as possible. This change will reduce the filing burdens of banking organizations.

The proposal modifies current § 208.20(c)(2), which requires reporting of known or suspected criminal activity when a state member bank has a substantial basis for identifying a non-insider suspect where bank funds or other assets involve or aggregate $1,000 or more. Proposed § 208.20(c)(2) raises the reporting threshold to $5,000, thereby reducing the reporting burden on banking organizations.

The proposal also modifies current § 208.20(c)(3), which requires a state member bank to report any known or suspected criminal violation involving $5,000 or more where the bank has no substantial basis for identifying a suspect. Specifically, proposed § 208.20(c)(3) raises the dollar reporting threshold from $5,000 to $25,000, thereby reducing further the reporting burden on banking organizations.

Proposed § 208.20(c)(4) requires a state member bank to report any financial transaction, regardless of the dollar amount, that: (i) the bank suspects involved funds derived from illicit activity, was conducted for the purpose of hiding or disguising funds from illicit activity, or in any way violated Federal money laundering statutes (18 U.S.C. 1956 and 1957); (ii) the bank suspects was potentially designed to evade the reporting or recordkeeping requirements of the BSA (31 U.S.C. 5311 through 5330); or (iii) the bank believes to be suspicious for any reason.

Section 208.20(d) Time for Reporting

Proposed § 208.20(d) sets forth the time requirements a state member bank must meet when filing a SAR. The proposal clarifies the reporting requirement in the event a suspect or group of suspects is not immediately identified. It does not substantively change the current requirements.

Section 208.20(e) Reporting to State and Local Authorities

No changes are being proposed to the current § 208.20(e).

Section 208.20(f) Exceptions

No changes are being made to the current § 208.20(f).

Section 208.20(g) Retention of Records

Current § 208.20(g) requires a state member bank to retain a copy of the criminal referral form and the original of any related documentation relating to a referral for a period of 10 years from the date of the report. No changes are being made to this requirement. The proposal clarifies the requirement that banking organizations make all supporting documentation available to appropriate law enforcement agencies upon request. This approach ensures that Federal law enforcement agencies and the Agencies, upon request, have access to any documentation necessary to prosecute a violation or pursue an administrative action by requiring financial institutions to identify and preserve underlying documentation for 10 years and treat such underlying documentation as having been filed with the SAR.

Section 208.20(h) Notification of the Board of Directors

Current § 208.20(h) requires notification regarding the filing of a SAR to a state member bank's board of directors by the bank's management. To reduce burdens on the boards of directors of state member banks, especially those large banks that file many SARs, the proposal recognizes that the required notification may be made to a committee of the board.

Section 208.20(i) Compliance

Current § 208.20(i) is headed ''Penalty''. The heading of the subsection is changed to reflect better the range of informal and formal supervisory actions that the Board can take to address suspicious activity reporting deficiencies.

Section 208.20(j) Confidentiality of SARs

The Board proposes to add a new subsection relating to the confidentiality of a SAR. Proposed § 208.20(j) states that a SAR and the information contained in a SAR are confidential, and that a state member bank should decline to produce a SAR citing applicable law (e.g., 31 U.S.C. 5318(g)) and the provisions of § 208.20 of Regulation H of the Board.

Comments

The Board invites public comment on all aspects of this proposal.

Regulatory Flexibility Act

Because this proposal is designed to reduce the burden on financial institutions for reporting suspicious financial transactions, the Board certifies that this proposed regulation will not have a significant financial impact on a substantial number of small banks or other small entities.

Paperwork Reduction Act

In accordance with Section 3507 of the Paperwork Reduction Act of 1980, the suspicious activity report regulation was approved under authority delegated

to the Board by the Office of Management and Budget. The Board has determined that the proposed regulations may reduce the burden on reporting institutions through the use of a simplified, shorter form, the filing of one form only, the raising of reporting thresholds, and the elimination of the submission of supporting documentation with a referral, as well as by the Board's provision to banking organizations of computer software to prepare the form. The estimated average burden associated with the collection of information contained in a SAR is approximately .6 hours per respondent. The burden per respondent will vary depending on the nature of the suspicious activity being reported.

Comments concerning the accuracy of this burden estimate should be directed to Mary M. McLaughlin, Division of Research and Statistics, Mail Stop 97, Federal Reserve Board, 20th Street and Constitution Avenue, N.W., Washington, D.C. 20551.

Executive Order 12291

The Board has determined that this proposed regulation is not a ''major rule'' and therefore does not require a regulatory impact analysis.

List of Subjects

12 CFR Part 208

Accounting, Agriculture, Banks, banking, Confidential business information, Crime, Currency, Federal Reserve System, Mortgages, Reporting and recordkeeping requirements, Securities.

12 CFR Part 211

Exports, Federal Reserve System, Foreign banking, Holding companies, Investments, Reporting and recordkeeping requirements.

12 CFR Part 225

Administrative practice and procedures, Banks, banking, Federal Reserve System, Holding companies, Reporting and recordkeeping requirements, Securities.

For the reasons set out in the preamble, Parts 208, 211, and 225 of chapter II of title 12 of the Code of Federal Regulations is proposed to be amended to read as follows:

PART 208—MEMBERSHIP OF STATE BANKING INSTITUTIONS IN THE FEDERAL RESERVE SYSTEM (REGULATION H)

1. The authority citation for 12 CFR part 208 continues to read as follows:

Authority: 12 U.S.C. 36, 248(a), 248(c), 321–338a, 371d, 461, 481–486, 601, 611, 1814, 1823(j), 1828(o), 1831o, 1831p-1, 3105, 3310, 3331–3351, and 3906–3909; 15 U.S.C. 78b, 781(b), 781(g), 781(i), 78o–4(c)(5), 78q, 78q–1 and 78w; 31 U.S.C. 5318.

2. Section 208.20 is revised to read as follows:

§ 208.20 Suspicious Activity Reports.

(a) *Purpose.* This section ensures that a state member bank files a Suspicious Activity Report when it detects a known or suspected violation of Federal law or suspicious financial transaction. This section applies to all state member banks.

(b) *Definitions.* For the purposes of this section:

(1) *FinCEN* means the Financial Crimes Enforcement Network of the Department of the Treasury.

(2) *Institution-affiliated party* means any institution-affiliated party as that term is defined in Sections 3(u) and 8(b)(3) and (4) of the Federal Deposit Insurance Act (12 U.S.C. 1813(u) and 1818(b)(3) and (4)).

(3) *SAR* means a Suspicious Activity Report form proscribed by the Board.

(c) *SARs required.* A state member bank shall file a SAR with the appropriate Federal law enforcement agencies and the Department of the Treasury and in accordance with the form's instructions, by sending a completed SAR to FinCEN in the following circumstances:

(1) Whenever the state member bank detects any known or suspected Federal criminal violation, or pattern of criminal violations, committed against the bank or involving a transaction conducted through the bank, where the bank has a substantial basis for identifying one of its directors, officers, employees, agents, or other institution-affiliated parties as having committed or aided in the commission of a criminal act regardless of the amount involved in the violation.

(2) Whenever the state member bank detects any known or suspected Federal criminal violation, or pattern of criminal violations, committed against the bank or involving a transaction or transactions conducted through the bank and involving or aggregating $5,000 or more in funds or other assets, where the bank believes that it was either an actual or potential victim of a criminal violation, or series of criminal violations, or that the bank was used to facilitate a criminal transaction, and that the bank has a substantial basis for identifying a possible suspect or group of suspects.

(3) Whenever the state member bank detects any known or suspected Federal criminal violation, or pattern of criminal violations, committed against the bank or involving a transaction or transactions conducted through the bank and involving or aggregating $25,000 or more in funds or other assets, where the bank believes that it was either an actual or potential victim of a criminal violation, or series of criminal violations, or that the bank was used to facilitate a criminal transaction, even though there is no basis for identifying a possible suspect or group of suspects.

(4) Whenever the state member bank detects any financial transaction conducted, or attempted, at the bank involving funds derived from illicit activity or for the purpose of hiding or disguising funds from illicit activities, or for the possible violation or evasion of the Bank Secrecy Act reporting and/or recordkeeping requirements, even if there is no substantial basis for identifying a possible suspect or group of suspects. A suspicious activity report must be filed for all instances where money laundering is suspected or where the bank believes that the transaction was suspicious for any reason, regardless of the identification of a potential suspect or group of suspects or the amount involved in the violation.

(d) *Time for reporting.* A state member bank is required to file a SAR no later than 30 calendar days after the date of initial detection of the possible, known or suspected criminal violation or series of criminal violations. If no suspect was identified on the date of detection of the incident triggering the filing, a state member bank may delay filing a SAR for an additional 30 calendar days after the identification of the suspect. In no case shall reporting be delayed more than 60 calendar days after the date of the loss or the possible known or suspected criminal violation or series of criminal violations. In situations involving violations requiring immediate attention, such as when a reportable violation is on-going, the financial institution shall immediately notify, by telephone, the appropriate law enforcement authority in addition to filing a timely SAR.

(e) *Reports to state and local authorities.* State member banks are encouraged to file a copy of the SAR with state and local law enforcement agencies where appropriate.

(f) *Exceptions.* (1) A state member bank need not file a SAR for a robbery or burglary committed or attempted that is reported to appropriate law enforcement authorities.

(2) A state member bank need not file a SAR for lost, missing, counterfeit, or stolen securities if it files a report pursuant to the reporting requirements of 17 CFR 240.17f-1.

(g) *Retention of records.* A state member bank shall maintain a copy of

any SAR filed and the original of any related documentation for a period of 10 years from the date of filing the SAR. A state member bank must make all supporting documentation available to appropriate law enforcement agencies upon request. Supporting documentation shall be identified and treated as filed with the SAR.

(h) *Notification to board of directors.* The management of a state member bank shall promptly notify its board of directors, or a committee thereof, of any report filed pursuant to this section.

(i) *Compliance.* Failure to file a SAR in accordance with this section and the form's instructions may subject the state member bank, its directors, officers, employees, agents, or other institution-affiliated parties to supervisory action.

(j) *Confidentiality of SARs.* SARs are confidential. Any person subpoenaed or otherwise requested to disclose a SAR or the information contained in a SAR shall decline to produce the information citing this section, applicable law (*e.g.*, 31 U.S.C. 5318(g)), or both.

PART 211—INTERNATIONAL BANKING OPERATIONS (REGULATION K)

1. The authority citation for part 211 is revised to read as follows:

Authority: 12 U.S.C. 221 *et seq.*, 1818, 1841 *et seq.*, 1843 *et seq.*, 3100 *et seq.*, 3901 *et seq.*

§§ 211.8 and 211.24 [Amended]

2. In §§ 211.8 and 211.24(f) remove the words ''criminal referral form'' and add, in their place, the words ''suspicious activity report''.

PART 225—BANK HOLDING COMPANIES AND CHANGE IN BANK CONTROL (REGULATION Y)

1. The authority citation for 12 CFR part 225 continues to read as follows:

Authority: 12 U.S.C. 1817(j)(13), 1818, 1831i, 1831p-1, 1843(c)(8), 1844(b), 1972(l), 3106, 3108, 3310, 3331–3351, 3907, and 3909.

§ 225.4 [Amended]

2. In § 225.4 the heading of paragraph (f) is revised to read ''*Suspicious Activity Report.*''.

3. In § 225.4(f) remove the words ''criminal referral form'' and add, in their place, the words ''suspicious activity report''.

By order of the Board of Governors of the Federal Reserve System, June 28, 1995.

William W. Wiles,

Secretary of the Board.

[FR Doc. 95–16250 Filed 6–30–95; 8:45 am]

BILLING CODE 6210–01–P

FEDERAL TRADE COMMISSION

16 CFR Part 436

Franchise Rule Review Public Workshop Conference

AGENCY: Federal Trade Commission.

ACTION: Public workshop conference

SUMMARY: The Federal Trade Commission (''FTC'' or ''Commission'') will hold a public workshop conference in connection with the regulatory review of the Commission's Trade Regulation Rule on Disclosure Requirements and Prohibitions Concerning Franchising and Business Opportunity Ventures (''the Francise Rule'' or ''the Rule'').

DATES: The public workshop conference will be held at the Crown Sterling Suites, 7901 34th Avenue South, Bloomington, Minnesota 55425, on September 12 through 14, 1995, from 9 a.m. until 5 p.m. each day.

ADDRESSES: Notification of interest in participating in the public workshop conference should be submitted in writing on or before August 11, 1995, to Myra Howard, Division of Marketing Practices, Federal Trade Commission, Washington, DC 20580.

FOR FURTHER INFORMATION CONTACT: Steven Toporoff, (202) 326–3135, or Myra Howard, (202) 326–2047, Division of Marketing Practices, Bureau of Consumer Protection, Federal Trade Commission, Washington DC 20580.

SUPPLEMENTARY INFORMATION: On April 7, 1995, the Commission published a request for public comment on the Franchise Rule. 60 FR 17656 (April 7, 1995). As part of its systematic review of Commission regulations and guides, the Commission requested comments about the overall costs and benefits of the Franchise Rule and its overall regulatory and economic impact. The Commission also requested comment on whether the Rule should be modified so as to: (1) Replace the current Rule disclosure requirements with those set forth in the revised Uniform Franchise Offering Circular Guidelines, approved by the Commission on December 30, 1993; (2) modify the scope of disclosure requirements for business opportunity ventures; (3) clarify the applicability of the Rule to trade show promoters; and (4) require the disclosure of earnings information. Written comments will be accepted on or before August 11, 1995. In its request for comment on the Franchise Rule, the Commission also stated that the FTC staff would conduct a Public Workshop Conference to discuss the written comments received during the rule review.

The Public Workshop Conference will afford Commission staff and interested parties an opportunity to discuss openly issues raised during the rule review, and, in particular, to examine publicly any areas of significant controversy or divergent opinions that are raised in the written comments. Commission staff will consider the views and suggestions made during the conference, in conjunction with the written comments, in formulating its final recommendation to the Commission concerning the Franchise Rule.

The Commission staff will select a limited number of parties to represent the significant interests affected by the Franchise Rule. These parties will participate in an open discussion of the issues. It is contemplated that the selected parties might ask and answer questions based on their respective comments.

In addition, the conference will be open to the general public. Members of the general public who attend the conference may have an opportunity to make a brief oral statement presenting their views on issues raised in the rule review process. Oral statements of views by members of the general public will be limited to a few minutes. The time allotted for these statements will be determined on the basis of the time available and the number of persons who wish to make statements. The discussion will be transcribed and placed on the public record. In addition, written submissions of views, or any other written or visual materials, will be accepted during the conference and will be made part of the public record.

To the extent possible, Commission staff will select parties to represent the following affected interests: Franchisors; franchisees; business opportunity promoters; business opportunity purchasers; franchise and business opportunity trade shows organizers; franchise and business opportunity brokers; franchise consultants; economists and academicians; Federal, State and local law enforcement and regulatory authorities; and any other interests that Commission staff may identify and deem appropriate for representation.

Parties representing the above-referenced interests will be selected on the basis of the following criteria:

1. The party submits a comment during the comment period ending on August 11, 1995.

2. The party notifies Commission staff in writing of its interest and, if required, authorization to represent an affected interest, on or before August 11, 1995.

3. The party's participation would promote a balance of interests being represented at the conference.

4. The party's participation would promote the consideration and discussion of a variety of issues raised during the rule review process.

5. The party has experience or expertise in activities affected by the Franchise Rule.

6. The party adequately reflects the views of the affected interest(s).

7. The number of parties selected will not be so large as to inhibit effective discussion among them.

The conference will be facilitated by a Commission staff member. It will be held over the course of three consecutive days, September 12–14, 1995, at the Crown Sterling Suites, 7901 34th Avenue South, Bloomington, Minnesota. Parties interested in representing an affected interest at the conference must notify Commission staff in writing on or before August 11, 1995. Each notice of interest in participating at the conference should contain a brief statement making clear which affected interest the requestor seeks to represent. Prior to the conference, parties selected to represent an affected interest will be provided with copies of the comments submitted in response to the request for comments.

List of Subjects in 16 CFR Part 436

Advertising, Business and industry, Franchising, Trade practices

Authority: 15 U.S.C. 41–58.

By direction of the Commission.

Donald S. Clark,

Secretary.

[FR Doc. 95–16257 Filed 6–30–95; 8:45 am]

BILLING CODE 6750–01–M

DEPARTMENT OF HEALTH AND HUMAN SERVICES

Food and Drug Administration

21 CFR Part 314

[Docket No. 94N–0449]

New Drug Applications; Drug Master Files

AGENCY: Food and Drug Administration, HHS.

ACTION: Proposed rule.

SUMMARY: The Food and Drug Administration (FDA) is proposing to revise its regulations governing drug master files (DMF's), which are referred to in the review and approval of new drugs and antibiotic drugs for human use. A DMF is a voluntary submission to FDA that may be used to provide confidential, detailed information about facilities, processes, or articles used in the manufacturing, processing, packaging, and storing of one or more human drugs. The information contained in a DMF may be referred to in support of an investigational new drug application (IND), a new drug application (NDA), an abbreviated new drug application (ANDA), or amendments or supplements to any of these. FDA has defined five distinct categories of submissions that it will accept and maintain, and it has designated these as Type I through Type V DMF's.

In December 1992, the Center for Drug Evaluation and Research's (CDER's) Chemistry, Manufacturing, Controls Coordinating Committee (CMCCC) established a DMF Task Force to perform a review and to explore ways of improving all aspects of the system. One of the Task Force recommendations, which was adopted by the CMCCC, was to eliminate Type I DMF's. Type I DMF's contain information about manufacturing sites, facilities, operating procedures, and personnel. The Task Force concluded that Type I DMF's should be eliminated because they contain outdated information, duplicate information contained in marketing applications, and are not used by CDER's review divisions or FDA's field inspectors. Under the proposed rule, FDA would no longer permit information submitted in a Type I DMF to be incorporated by reference in IND's, NDA's, ANDA's, abbreviated antibiotic applications (AADA's), and supplemental applications. This proposed rule is intended to eliminate submissions of information that are not necessary either to conduct inspections of manufacturing facilities or to review the chemistry, manufacturing, and controls sections of IND's, NDA's, and abbreviated applications. This proposed rule would not apply to master file systems that are operated by the Center for Biologics Evaluation and Research, the Center for Veterinary Medicine, and Center for Device and Radiological Health.

DATES: Written comments by October 2, 1995. FDA proposes that any final rule based on this proposal become effective 60 days after its date of publication in the **Federal Register**.

ADDRESSES: Submit written comments to the Dockets Management Branch (HFA–305), Food and Drug Administration, rm. 1–23, 12420 Parklawn Dr., Rockville, MD 20857.

FOR FURTHER INFORMATION CONTACT: Howard P. Muller, Center for Drug Evaluation and Research (HFD–362), Food and Drug Administration, 7500 Standish Pl., Rockville, MD 20855, 301–594–1046.

SUPPLEMENTARY INFORMATION:

I. Introduction

DMF's allow regulated industry to submit to FDA information that may be used to support an IND, NDA, ANDA, AADA, another DMF, an export application, or amendments or supplements to any of these. FDA does not require industry to submit DMF's; a DMF is submitted solely at the discretion of the holder. DMF's allow industry to provide confidential, detailed information about facilities, processes, or articles used in the manufacturing, processing, packaging, and storing of drugs for human use. This information is then incorporated by reference in a drug application or supplement without public disclosure.

FDA regulations in § 314.420(a) (21 CFR 314.420(a)) define five types of DMF's according to the kind of information to be submitted. Type I submissions include manufacturing site, facilities, operating procedures, and personnel information. Type II submissions include information regarding drug substances, drug substance intermediates, and materials used to prepare them, or drug products. Type III submissions include information about packaging material. Type IV submissions include information concerning excipients, colorants, flavors, and essences, or material used in their preparation. Type V submissions, detailed in the ''Guideline for Drug Master Files'' (1989), include FDA-accepted reference information.

Under § 314.420, FDA recommended that foreign drug manufacturing facilities file with FDA information concerning their manufacturing sites, facilities, operating procedures, and personnel in a Type I DMF. FDA requested this information to plan its on-site inspections of and travel to foreign drug manufacturing facilities. FDA believed that inspections would be conducted more efficiently if FDA inspectors knew in advance the location, plant layout, equipment type, and personnel at the foreign manufacturing site. FDA did not request that domestic firms submit Type I DMF's because FDA inspectors regularly visit firms in their district and are familiar with both their personnel and manufacturing sites. Nonetheless, some domestic pharmaceutical firms have submitted Type I DMF's. Currently, CDER has approximately 1,700 Type I DMF's.

Recently, FDA evaluated the usefulness of Type I DMF's. The agency determined that its inspectors were not using Type I DMF's to plan foreign inspections because the Type I DMF was not easily accessible or information contained in the Type I DMF was outdated. Instead, FDA now requests foreign firms to submit a preinspection document package that includes both current facility and product-specific information. FDA inspectors use the preinspection package to plan their inspection. Although submission of the package is voluntary, foreign firms comply with the agency's request because the information helps inspectors to conduct inspections quickly and efficiently. The agency concluded that Type I DMF's could be eliminated without adversely affecting inspections of foreign manufacturing facilities.

FDA has also determined that its review divisions do not rely on Type I DMF's. Although Type I DMF's are often incorporated by reference into IND's, NDA's, and abbreviated applications, the information that the agency requested to be submitted under Type I DMF's is not required for chemistry, manufacturing, and controls review. Under 21 CFR 314.50(d)(1)(i) and (d)(1)(ii), a drug product applicant is required to furnish the name and location of facilities used in the manufacture of the drug substance or product. Unlike a Type I DMF submission, this information, when submitted as part of an application, is current and product-specific. Therefore, review divisions rely on the applications themselves for this information.

Accordingly, the agency proposes to amend § 314.420 to eliminate Type I DMF's. The agency would no longer accept new Type I DMF's, or correspondence updating existing Type I DMF's. The information in Type I DMF's currently on file could no longer be incorporated by reference into new applications, amendments, or supplements, and the Type I DMF's would be transferred to the Federal Records Center, Suitland, MD. These proposed changes would supersede all information regarding Type I DMF's detailed in the ''Guideline for Drug Master Files.''

The agency acknowledges that some firms may have submitted information under a Type I DMF that should have been filed under Types II through V DMF's. Therefore, FDA is proposing to make available a list of all CDER Type I DMF's for public review in the Dockets Management Branch under the docket number found in brackets in the heading of this document. If a DMF holder believes that its Type I DMF should be categorized as another type of DMF, the DMF holder should submit a request to the Drug Master File Staff, Food and Drug Administration, rm. 2–14, 12420 Parklawn Dr., Rockville, MD 20857, within 30 days of publication of any final rule based on this proposal. This request should: (1) Be submitted by the responsible official or designated U.S. agent; (2) briefly identify the subject of the DMF; and (3) propose the DMF Type (i.e., Type II, III, IV, or V) to which information in the Type I DMF should be transferred. If the information should be incorporated into an existing Type II through Type V DMF, the file number of that DMF should be provided. FDA would consider transferring an entire Type I DMF to another type only if the Type I DMF contains substantive information other than information concerning manufacturing site, facilities, operating procedures, and personnel.

The agency also recognizes that some Type I DMF's currently on file contain information concerning sterilization process validation and other information relevant to the review, evaluation, and assurance of the sterility of sterile products. For sterile items that are not the subject of an IND, NDA, ANDA, or AADA, and that are sold to a second party (e.g., rubber closures that are sterilized by the manufacturer and sold to a second party), CDER would consider transferring product-specific and general information concerning sterilization process validation to the DMF file or DMF type (i.e., II through IV) under which manufacturing information for the specific item is filed. Contract manufacturers of sterile finished drug products, contract sterilization firms (e.g., ethylene oxide, gamma radiation, and electron beam radiation), and manufacturers of sterile finished drug products that are the subject of a drug product application could request a transfer from Type I to Type V DMF of nonproduct-specific information and procedures that are submitted to support a claim of sterility. Where applicable, the content and format of such transferred information should follow FDA's guideline entitled ''Guideline for Submitting Documentation for Sterilization Process Validation in Applications for Human and Veterinary Drug Products.'' The mechanism for requesting a transfer would be the same as the mechanism for recategorizing Type I DMF's, as described in the preceding paragraph.

II. Environmental Impact

The agency has determined under 21 CFR 25.24(a)(8) that this action is of a type that does not individually or cumulatively have a significant effect on the human environment. Therefore, neither an environmental assessment nor an environmental impact statement is required.

III. Analysis of Impacts

FDA has examined the impacts of the proposed rule under Executive Order 12866 and the Regulatory Flexibility Act (Pub. L. 96–354). Executive Order 12866 directs agencies to assess all costs and benefits of available regulatory alternatives and, when regulation is necessary, to select regulatory approaches that maximize net benefits (including potential economic, environmental, public health and safety, and other advantages; distributive impacts; and equity). The agency believes that this proposed rule is consistent with the regulatory philosophy and principles identified in the Executive Order. In addition, the proposed rule is not a significant regulatory action as defined by the Executive Order and so is not subject to review under the Executive Order.

The Regulatory Flexibility Act requires agencies to analyze regulatory options that would minimize any significant impact of a rule on small entities. Because the proposed regulation, if finalized, would lighten paperwork and recordkeeping burdens, the agency certifies that the proposed rule will not have a significant economic impact on a substantial number of small entities. Therefore, under the Regulatory Flexibility Act, no further analysis is required.

IV. Effective Date

FDA proposes that any final rule based on this proposal become effective 60 days after its date of publication in the **Federal Register**.

V. Request for Comments

Interested persons may, on or before October 2, 1995, submit to the Dockets Management Branch (address above) written comments regarding this proposal. Two copies of any comments are to be submitted, except that individuals may submit one copy. Comments are to be identified with the docket number found in brackets in the heading of this document. Received comments may be seen in the office above between 9 a.m. and 4 p.m., Monday through Friday.

List of Subjects in 21 CFR Part 314

Administrative practice and procedure, Confidential business information, Drugs, Reporting and recordkeeping requirements.

Therefore, under the Federal Food, Drug, and Cosmetic Act and under authority delegated to the Commissioner of Food and Drugs, it is proposed that 21 CFR part 314 be amended as follows:

PART 314—APPLICATIONS FOR FDA APPROVAL TO MARKET A NEW DRUG OR AN ANTIBIOTIC DRUG

1. The authority citation for 21 CFR part 314 continues to read as follows:

Authority: Secs. 201, 301, 501, 502, 503, 505, 506, 507, 701, 704, 721 of the Federal Food, Drug, and Cosmetic Act (21 U.S.C. 321, 331, 351, 352, 353, 355, 356, 357, 371, 374, 379e).

2. Section 314.420 is amended by removing and reserving paragraph (a)(1), and by revising the second sentence of paragraph (a)(5) to read as follows:

§ 314.420 Drug master files.

(a) * * *

(1) [Reserved]

* * * * *

(5) * * * (A person wishing to submit information and supporting data in a drug master file (DMF) that is not covered by Types II through IV DMF's must first submit a letter of intent to the Drug Master File Staff, Food and Drug Administration, 12420 Parklawn Dr., rm. 2–14, Rockville, MD 20857. * * *)

* * * * *

Dated: June 26, 1995.

William B. Schultz,

Deputy Commissioner for Policy.

[FR Doc. 95–16206 Filed 6–30–95; 8:45 am]

BILLING CODE 4160–01–F

DEPARTMENT OF THE INTERIOR

Bureau of Indian Affairs

25 CFR Chapter I

Meeting of the Indian Self-Determination Negotiated Rulemaking Committee

AGENCY: Bureau of Indian Affairs, Interior Indian Health Service, HHS.

ACTION: Notice of meeting.

SUMMARY: The Secretary of the Interior (DOI) and the Secretary of Health and Human Services (DHHS) have established an Indian Self-Determination Negotiated Rulemaking Committee (Committee) to negotiate and develop a proposed rule implementing the Indian Self-Determination and Education Assistance Act (ISDEAA), as amended.

The Departments have determined that the establishment of this Committee is in the public interest and will assist the agencies in developing regulations authorized under section 107 of the ISDEAA. The agenda for this meeting will consist of workgroup reports on the advantages and disadvantages of developing regulations in those subject areas provided in ISDEAA where regulations are permitted. In addition, further meeting and work assignments will be planned.

DATES: The Committee and appropriate workgroups will meet on the following days beginning at approximately 8:30 am and ending at approximately 5:00 pm on each day: Sunday, July 9, Monday, July 10, Tuesday, July 10, Wednesday, July 12, Thursday, July 13.

ADDRESSES: All meetings July 9 through July 13, 1995, will be held at the Red Lion Hotel, 3203 Quebec Street, Denver, CO 80207. Tel.: (303) 321–3333. (Workgroups will also be meeting at the same location.)

It was originally planned that this meeting be held in Oklahoma City, however, organizers were unable to find adequate accommodations in Oklahoma City or Tulsa. Due to the lack of space at these preferred locations, the site for the meeting has been changed to Denver Colorado. Also the difficulty of confirming a meeting location in Oklahoma has made it necessary that this notice be published within the prescribed 15 days of the actual beginning of the meeting. Committee activities begin on Sunday, July 9, and will continue through Thursday, July 13. Activities will include meetings of the full committee as well as various workgroup sessions.

Written statements may be submitted to Mr. James J. Thomas, Chief, Division of Self-Determination Services, Bureau of Indian Affairs, 1849 C Street, NW, MS: 4627–MIB, Washington, DC 20240, telephone (202) 208–3708.

FOR FURTHER INFORMATION CONTACT: Mr. James J. Thomas, Chief, Division of Self-Determination Services, Bureau of Indian Affairs, 1849 C Street, NW., MS: 4627–MIB, Washington, DC 20240, telephone (202) 208–3708; or Mrs. Merry Elrod, Acting Director, Division of Self-Determination, Indian Health Service, 5600 Fishers Lane, Parklawn Building, Room 6A–05, Rockville, MD 20857, telephone (301) 443–1044.

SUPPLEMENTARY INFORMATION: The location and dates of future meetings will be published in the **Federal Register.** The meetings will be open to the public without advanced registration.

Public attendance may be limited to the space available. Members of the public may make statements during the meeting, to the extent time permits and file written statements with the Committee for its consideration. Written statements should be submitted to the address listed above. Summaries of Committee meetings will be available for public inspection and copying ten days following each meeting at the same address. In addition, the materials received to date during the input sessions are available for inspection and copying at the same address.

Dated: June 28, 1995.

Ada E. Deer,

Assistant Secretary—Indian Affairs.

[FR Doc. 95–16351 Filed 6–30–95; 8:45 am]

BILLING CODE 4310–02–M

ENVIRONMENTAL PROTECTION AGENCY

40 CFR Parts 52 and 70

[CA 147–2–7073; AD–FRL–5253–2]

Clean Air Act Proposed Interim Approval of the Operating Permits Program; Proposed Approval of State Implementation Plan Revision for the Issuance of Federally Enforceable State Operating Permits; Mojave Desert Air Quality Management District, California

AGENCY: Environmental Protection Agency (EPA).

ACTION: Proposed rule.

SUMMARY: The EPA proposes interim approval of the title V operating permits program submitted by the Mojave Desert Air Quality Management District (Mojave Desert, or District) for the purpose of complying with federal requirements that mandate that states develop, and submit to EPA, programs for issuing operating permits to all major stationary sources and to certain other sources. There are nine deficiencies in Mojave Desert's program, as specified in the Technical Support Document and outlined below, that must be corrected before the program can be fully approved. EPA is also proposing to approve a revision to Mojave Desert's portion of the California State Implementation Plan (SIP) regarding synthetic minor regulations for the issuance of federally enforceable state operating permits (FESOP). In order to extend the federal enforceability of state operating permits to hazardous air pollutants (HAP), EPA

is also proposing approval of Mojave Desert's synthetic minor regulations pursuant to section 112 of the Act. Today's action also proposes approval of Mojave Desert's mechanism for receiving straight delegation of section 112 standards.

DATES: Comments on these proposed actions must be received in writing by August 2, 1995.

ADDRESSES: Comments should be addressed to Sara Bartholomew, Mail Code A–5–2, U.S. Environmental Protection Agency, Region IX, Air & Toxics Division, 75 Hawthorne Street, San Francisco, CA 94105.

Copies of the District's submittal and other supporting information used in developing the proposed interim approval are available for inspection during normal business hours at the following location: U.S. Environmental Protection Agency, Region IX, 75 Hawthorne Street, San Francisco, CA 94105.

FOR FURTHER INFORMATION CONTACT: Sara Bartholomew (telephone 415/744–1170), Mail Code A–5–2, U.S. Environmental Protection Agency, Region IX, Air & Toxics Division, 75 Hawthorne Street, San Francisco, CA 94105.

SUPPLEMENTARY INFORMATION:

I. Background and Purpose

As required under title V of the Clean Air Act (Act) as amended (1990), EPA has promulgated rules that define the minimum elements of an approvable state operating permits program and the corresponding standards and procedures by which the EPA will approve, oversee, and withdraw approval of state operating permits programs (see 57 FR 32250 (July 21, 1992)). These rules are codified at 40 CFR part 70 (part 70). Title V requires states to develop, and submit to EPA, programs for issuing operating permits to all major stationary sources and to certain other sources.

The Act requires that states develop and submit title V programs to EPA by November 15, 1993, and that EPA act to approve or disapprove each program within 1 year after receiving the submittal. The EPA's program review occurs pursuant to section 502 of the Act and the part 70 regulations, which together outline criteria for approval or disapproval. Where a program substantially, but not fully, meets the requirements of part 70, EPA may grant the program interim approval for a period of up to 2 years. If EPA has not fully approved a program by 2 years after the November 15, 1993 date, or by the end of an interim program, it must establish and implement a federal program.

On June 28, 1989 (54 FR 27274), EPA published criteria for approving and incorporating into the SIP regulatory programs for the issuance of federally enforceable state operating permits. Permits issued pursuant to an operating permit program meeting these criteria and approved into the SIP are considered federally enforceable. EPA has encouraged states to consider developing such programs in conjunction with title V operating permit programs for the purpose of creating federally enforceable limits on a source's potential to emit. This mechanism would enable sources to reduce their potential to emit to below the title V applicability thresholds and avoid being subject to title V. (See the guidance document entitled, ''Limitation of Potential to Emit with Respect to Title V Applicability Thresholds,'' dated September 18, 1992, from John Calcagni, Director of EPA's Air Quality Management Division.) On November 3, 1993, EPA announced in a guidance document entitled, ''Approaches to Creating Federally Enforceable Emissions Limits,'' signed by John S. Seitz, Director of EPA's Office of Air Quality Planning and Standards (OAQPS), that this mechanism could be extended to create federally enforceable limits for emissions of hazardous air pollutants (HAP) if the program were approved pursuant to section 112(l) of the Act.

II. Proposed Action and Implications

This document focuses on specific elements of Mojave Desert's title V operating permits program submittal that must be corrected to meet the minimum requirements of 40 CFR part 70. The full program submittal, the Technical Support Document containing a detailed analysis of the full program, and other relevant materials are available as part of the public docket.

A. Analysis of State Submission

1. Title V Support Materials

Mojave Desert's title V program was submitted by the California Air Resources Board (CARB) on November 24, 1993 and found by EPA to be incomplete, due to the lack of Federal Operating Permit regulations. Mojave resubmitted its program on March 10, 1995 and it was found to be complete on May 11, 1995. The Governor's letter requesting source category-limited interim approval, California enabling legislation, and Attorney General's legal opinion were submitted by CARB for all districts in California and therefore were not included separately in Mojave Desert's submittal. The Mojave Desert submission does contain a complete program description, District implementing and supporting regulations, and all other program documentation required by § 70.4. An implementation agreement between Mojave Desert and EPA is currently being developed.

2. Title V Operating Permit Regulations and Program Implementation

The Mojave Desert's title V regulations were adopted on December 21, 1994. They consist of Regulation XII (Federal Operating Permits). The District also submitted supporting materials including the following rules: Rule 219 (Equipment Not Requiring a Permit, adopted December 21, 1994), 221 (Federal Operating Permit Requirement, adopted November 23, 1994), 301 (Permit Fees, adopted July 9, 1976, amended October 23, 1994), 312 (Fees for Federal Operating Permits, adopted December 21, 1994), and 430 (Breakdown Provisions, adopted May 7, 1976, amended December 21, 1994). These regulations ''substantially meet'' the requirements of 40 CFR part 70, § 70.2 and § 70.3 for applicability; § 70.4, § 70.5, and § 70.6 for permit content, including operational flexibility; § 70.7 for public participation and minor permit modifications; § 70.5 for complete application forms; and § 70.11 for enforcement authority. Although the regulations substantially meet part 70 requirements, nine program deficiencies outlined below are interim approval issues. Recommended changes are detailed further in the Technical Support Document.

Variances—Mojave Desert has authority under State and local law to issue a variance from State and local requirements. Sections 42350 *et seq.* of the California Health and Safety Code and District Regulation 1, sections 431–433 allow the District to grant relief from enforcement action for permit violations. The EPA regards these provisions as wholly external to the program submitted for approval under part 70, and consequently, is proposing to take no action on these provisions of State and local law.

The EPA has no authority to approve provisions of state or local law, such as the variance provisions referred to, that are inconsistent with the Act. The EPA does not recognize the ability of a permitting authority to grant relief from the duty to comply with a federally enforceable part 70 permit, except where such relief is granted through

procedures allowed by part 70. A part 70 permit may be issued or revised (consistent with part 70 permitting procedures) to incorporate those terms of a variance that are consistent with applicable requirements. A part 70 permit may also incorporate, via part 70 permit issuance or modification procedures, the schedule of compliance set forth in a variance. However, EPA reserves the right to pursue enforcement of applicable requirements notwithstanding the existence of a compliance schedule in a permit to operate. This is consistent with 40 CFR 70.5(c)(8)(iii)(C), which states that a schedule of compliance ''shall be supplemental to, and shall not sanction noncompliance with, the applicable requirements on which it is based.''

Insignificant Activities—Section 70.4(b)(2) requires states to include in their part 70 programs any criteria used to determine insignificant activities or emission levels for the purpose of determining complete applications. Section 70.5(c) states that an application for a part 70 permit may not omit information needed to determine the applicability of, or to impose, any applicable requirement, or to evaluate appropriate fee amounts. Section 70.5(c) also states that EPA may approve, as part of a state program, a list of insignificant activities and emissions levels which need not be included in permit applications. Under part 70, a state must request and EPA must approve as part of that state's program any activity or emission level that the state wishes to consider insignificant. Part 70, however, does not establish appropriate emission levels for insignificant activities, relying instead on a case-by-case determination of appropriate levels based on the particular circumstances of the part 70 program under review.

In Rule 219 (Equipment Not Requiring a Permit) Mojave Desert provided both threshold emissions levels and a list of specific equipment which would not require a permit. This rule also clearly states that equipment need not be listed in a permit application for a federal operating permit if it falls below the threshold, is on the list of equipment in the rule, is not subject to an applicable requirement, and is not included in the equipment list solely due to size or production rate. The only weakness in these gatekeepers is that the word ''and'' is missing between sections (B)(1)(b) and (c), and (B)(1)(c) and (d) of Rule 219. Adding ''and'' in these two places would clarify that all of the four gatekeepers must apply for equipment to be exempt, not just one. These corrections must be made in order to receive full approval.

Rule 219 set the threshold criteria for equipment to be exempt from a federal operating permit as 10% of the applicable threshold for determination of a major source, or 5 tons per year of any regulated air pollutant (whichever is less), and for HAP any de minimus level, any significance level, or 0.5 tons per year (whichever is less). For other state and district programs, EPA has proposed to accept, as sufficient for full approval, emission levels for insignificant activities of 2 tons per year for criteria pollutants and the lesser of 1000 pounds per year, section 112(g) de minimis levels, or other title I significant modification levels for HAP and other toxics (40 CFR 52.21(b)(23)(i)). EPA believes that these levels are sufficiently below the applicability thresholds of many applicable requirements to assure that no unit potentially subject to an applicable requirement is left off a title V application.

Mojave Desert did not describe the criteria used to determine the insignificant activities or emission levels outlined in Rule 219. In addition, Mojave's threshold levels as described above are higher than those EPA has proposed to accept. Because of this, EPA is requesting comment on the appropriateness of these emission levels for determining insignificant activities in Mojave Desert. This request for comment is not intended to restrict the ability of other states and districts to propose, and EPA to approve, different emission levels if the state or district demonstrates that such alternative emission levels are insignificant compared to the level of emissions from and types of units that are permitted or subject to applicable requirements.

3. Title V Permit Fee Demonstration

Section 502(b)(3) of the Act requires that each permitting authority collect fees sufficient to cover all reasonable direct and indirect costs required to develop and administer its title V operating permits program. Each title V program submittal must contain either a detailed demonstration of fee adequacy or a demonstration that aggregate fees collected from title V sources meet or exceed $25 per ton of emissions per year (adjusted from 1989 by the Consumer Price Index (CPI)). The $25 per ton amount is presumed, for program approval, to be sufficient to cover all reasonable program costs and is thus referred to as the ''presumptive minimum.'' See § 70.9(b)(2)(i).

Mojave Desert has opted to make a presumptive minimum fee demonstration. Mojave Desert's existing fee schedule (Element 7) requires title V facilities to pay an amount equivalent to $48.76 per ton in annual operating fees. This amount meets EPA's presumptive minimum (CPI adjusted). The $48.76 per ton amount is based on a calculation of 1993/94 fee revenues per ton of emissions plus a supplemental title V fee of 14.3% that covers the additional costs posed by title V. Mojave Desert will maintain an accounting system and is prepared to increase fees, as needed, to reflect actual program implementation costs.

4. Provisions Implementing the Requirements of Other Titles of the Act

a. Section 112—Mojave Desert has demonstrated in its title V program submittal adequate legal authority to implement and enforce all section 112 requirements through the title V permit. This legal authority is contained in the State of California enabling legislation and in regulatory provisions defining ''applicable requirements'' and ''federally enforceable'' and mandating that all federal air quality requirements must be incorporated into permits. EPA has determined that this legal authority is sufficient to allow Mojave Desert to issue permits that assure compliance with all section 112 requirements. For further discussion, please refer to the Technical Support Document accompanying this action and the April 13, 1993 guidance memorandum entitled, ''Title V Program Approval Criteria for Section 112 Activities,'' signed by John Seitz.

b. Title IV—Mojave Desert is submitting proposed Rule 1210 (Acid Rain Provisions of Federal Operating Permits) to its Board in June, 1995, which incorporates the pertinent provisions of part 72, either by reference or in specific language in the rule. EPA interprets ''pertinent provisions'' to include all provisions necessary for the permitting of affected sources.

B. Proposal for and Implications of Interim Approval

1. Title V Operating Permits Program

a. Proposed Interim Approval—The EPA is proposing to grant interim approval to the operating permits program submitted by CARB on behalf of Mojave Desert on March 10, 1995. Following interim approval, Mojave Desert must make the following changes to receive full approval:

(1) Revise Rule 1203(G)(3)(g), which prohibits the permit shield from applying to Administrative Permit Amendments and Significant Permit Modifications, to include a reference to

Minor Permit Modifications as well. The permit shield cannot apply to Minor Permit Modifications, and the rule must state this clearly. See § 70.7(e)(2)(vi).

(2) Add a provision for sending the final permit to EPA, as required by § 70.8(a)(1). Mojave's Rule 1203(B)(1)(c) only provides for sending the proposed permit to EPA.

(3) Adopt Rule 1210 (Acid Rain Provisions of Federal Operating Permits).

(4) Rule 1206(A)(1)(i) must amend the provision that no reopening is required if the effective date of the additional applicable requirement is later than the date on which the permit is due to expire. If the original permit or any of its terms and conditions are extended pursuant to § 70.4(b)(10), the permit *must* be reopened to include a new applicable requirement, and a statement must be made to this effect in Mojave's rule (§ 70.7(f)(1)(i)).

(5) Clarify in Rule 1203(G)(3)(B) that the permit shield shall not limit liability for violations which occurred prior to *or at* the time of the issuance of the federal operating permit, by adding the underlined words. This is important to clarify that violations which are continuing at the time of permit issuance will not be shielded against.

(6) Lower the cutoff levels for criteria pollutants in Rule 219 (Equipment not Requiring a Permit) or, alternatively, demonstrate that Mojave Desert's levels are insignificant compared to the level of emissions from and types of units that are required to be permitted or are subject to applicable requirements.

(7) Add ''and'' at the end of sections (b) and (c) in Rule 219(B)(2), in order to clarify that the four gatekeepers must all apply in order for equipment to be exempt from getting a federal operating permit.

(8) Add to Rule 1203(D)(1)(e)(i) a reference to the requirement for the clear identification of all deviations with respect to reporting (§ 70.6(a)(3)(iii)(A)).

(9) Add to Rule 1203(D)(1)(e)(ii) a reference to the requirement to specify the probable cause and corrective actions or preventive measures taken with regard to reporting a deviation (§ 70.6(a)(3)(iii)(B)).

b. Legislative Source Category-Limited Interim Approval Issue—In addition to the District-specific issues arising from Mojave Desert's program submittal and locally adopted regulations, California State law currently exempts agricultural production sources from permit requirements. Because of this exemption, California programs are only eligible for source category-limited interim approval. In order for this program to receive full approval (and avoid a disapproval upon the expiration of this interim approval), the California Legislature must revise the Health and Safety Code to eliminate the exemption of agricultural production sources from the requirement to obtain a permit.

c. Implications of Interim Approval—The above described program and legislative deficiencies must be corrected before Mojave Desert can receive full program approval. For additional information, please refer to the Technical Support Document, which contains a detailed analysis of Mojave Desert's operating permits program, and California's enabling legislation.

Interim approval, which may not be renewed, would extend for a period of 2 years. During the interim approval period, the District would be protected from sanctions, and EPA would not be obligated to promulgate a federal permits program in the Mojave Desert. Permits issued under a program with interim approval would have full standing with respect to part 70, and the 1-year time period for submittal of permit applications by subject sources would begin upon EPA's final rulemaking granting interim approval, as would the 3-year time period for processing initial permit applications.

Following final interim approval, if Mojave Desert should fail to submit a complete corrective program for full approval by the date 6 months before expiration of the interim approval, EPA would start an 18-month clock for mandatory sanctions. Then, if Mojave Desert should fail to submit a corrective program that EPA found complete before the expiration of that 18-month period, EPA would be required to apply one of the sanctions in section 179(b) of the Act, which would remain in effect until EPA determined that the District corrected the deficiency by submitting a complete corrective program. If, six months after application of the first sanction, the Mojave Desert still had not submitted a corrective program that EPA found complete, a second sanction would be required.

If, following final interim approval, EPA were to disapprove Mojave Desert's complete corrective program, EPA would be required to apply one of the section 179(b) sanctions on the date 18 months after the effective date of the disapproval unless prior to that date the District submitted a revised program and EPA determined that it corrected the deficiencies that prompted the disapproval. Again, if, six months after EPA applied the first sanction, Mojave Desert had not submitted a revised program that EPA determined corrected the deficiencies, a second sanction would be required. In addition, discretionary sanctions may be applied where warranted any time after the end of an interim approval period if a state or district has not submitted a timely and complete corrective program or EPA has disapproved a submitted corrective program. Moreover, if EPA has not granted full approval to a state or district program by the expiration of an interim approval and that expiration occurs after November 15, 1995, EPA must promulgate, administer and enforce a federal permits program for that state or district upon interim approval expiration.

2. Section 112(g) Implementation

EPA has decided that it is not reasonable to expect the states and districts to implement section 112(g) before a rule is issued. EPA therefore published an interpretive notice in the **Federal Register** regarding section 112(g) of the Act: 60 FR 8333 (February 14, 1995). This notice outlines EPA's revised interpretation of 112(g) applicability prior to EPA's issuing the final 112(g) rule. The notice states that major source modifications, constructions, and reconstructions will not be subject to 112(g) requirements until the final rule is promulgated. EPA expects to issue the 112(g) final rule in September 1995.

The notice further explains that EPA is considering whether the effective date of section 112(g) should be delayed beyond the date of promulgation of the Federal rule so as to allow States and Districts time to adopt rules implementing the Federal rule, and that EPA will provide for any such additional delay in the final section 112(g) rulemaking. Unless and until EPA provides for such an additional postponement of section 112(g), Mojave Desert must be able to implement section 112(g) during the period between promulgation of the Federal section 112(g) rule and adoption of implementing District regulations.

For this reason, EPA is proposing to approve the use of Mojave Desert's preconstruction review programs as a mechanism to implement section 112(g) during the transition period between promulgation of the section 112(g) rule and adoption by the nineteen districts of rules specifically designed to implement section 112(g). However, since approval is intended solely to confirm that Mojave Desert has a mechanism to implement section 112(g) during the transition period, the approval itself will be without effect if EPA decides in the final section 112(g) rule that there will be no transition period. The EPA is

limiting the duration of its approval of the use of preconstruction programs to implement 112(g) to 12 months following promulgation by EPA of the section 112(g) rule.

3. Program for Delegation of Section 112 Standards as Promulgated

Requirements for part 70 program approval, specified in 40 CFR 70.4(b), encompass section 112(l)(5) requirements for approval of a program for delegation of section 112 standards as promulgated by EPA as they apply to part 70 sources. Section 112(l)(5) requires that the District's program contain adequate authorities, adequate resources for implementation, and an expeditious compliance schedule, which are also requirements under part 70. Therefore, the EPA is also proposing to grant approval under section 112(l)(5) and 40 CFR 63.91 of Mojave Desert's program for receiving delegation of section 112 standards that are unchanged from the federal standards as promulgated. California Health and Safety Code section 39658 provides for automatic adoption by CARB of section 112 standards upon promulgation by EPA. Section 39666 of the Health and Safety Code requires that districts then implement and enforce these standards. Thus, when section 112 standards are automatically adopted pursuant to section 39658, Mojave Desert will have the authority necessary to accept delegation of these standards without further regulatory action by the District. The details of this mechanism and the means for finalizing delegation of standards will be set forth in a Memorandum of Agreement between Mojave Desert and EPA, expected to be completed prior to approval of Mojave Desert's section 112(l) program for straight delegations. This program applies to both existing and future standards but is limited to sources covered by the part 70 program.

4. State Operating Permit Program for Synthetic Minors

On March 31, 1995, CARB submitted for approval into the Mojave Desert's portion of the California State Implementation Plan (SIP) a local operating permit program designed to create federally enforceable limits on a source's potential to emit. This District program is referred to as a synthetic minor operating permit program, and it consists of regulations that will be integrated with the District's existing, non-federally enforceable, operating permit program. Such programs are also referred to as federally enforceable state operating permit (FESOP) programs. This synthetic minor or FESOP mechanism will allow sources to reduce their potential to emit to below the title V applicability thresholds and avoid being subject to title V.

Mojave Desert's synthetic minor regulations were adopted on November 23, 1994 and codified in District Regulation XII, Rule 221 (Federal Operating Permit Requirement). EPA found the initial SIP submittal complete on May 25, 1995.

The five criteria for approving a state operating permit program into a SIP were set forth in the June 28, 1989 **Federal Register** notice (54 FR 27282): (1) The program must be submitted to and approved by EPA; (2) the program must impose a legal obligation on the operating permit holders to comply with the terms and conditions of the permit, and permits that do not conform with the June 28, 1989 criteria shall be deemed not federally enforceable; (3) the program must contain terms and conditions that are at least as stringent as any requirements contained in the SIP or enforceable under the SIP or any other section 112 or other Clean Air Act standard or requirement; (4) permits issued under the program must contain conditions that are permanent, quantifiable, and enforceable as a practical matter; and (5) permits issued under the program must be subject to public participation.

Permits issued under an approved program are federally enforceable and may be used to limit the potential to emit of sources of criteria pollutants. Mojave Desert's synthetic minor provisions of Regulation XII, Rule 221 meet the June 28, 1989 criteria by ensuring that the limits will be permanent, quantifiable, and practically enforceable and by providing adequate notice and comment to EPA and the public. Please refer to the Technical Support Document for a thorough analysis of the June 28, 1989 criteria as applied to the Mojave Desert's synthetic minor program.

EPA is proposing to approve pursuant to part 52 and the approval criteria specified in the June 28, 1989 **Federal Register** notice the following regulation that was submitted to create the synthetic minor operating permit program: Rule 221 (Federal Operating Permit Requirement).

On March 10, 1995, in its title V program submittal under ''Addendum: Federal Clean Air Act Section 112(l) Authority Request Letter,'' CARB requested approval of Mojave Desert's synthetic minor program, consisting of the rules specified above, under section 112(l) of the Act for the purpose of creating federally enforceable limitations on the potential to emit of hazardous air pollutants (HAP). The separate request for approval under section 112(l) is necessary because the proposed SIP approval discussed above only provides a mechanism for controlling criteria pollutants. While federally enforceable limits on criteria pollutants (i.e., VOC's or PM–10) may have the incidental effect of limiting certain HAP listed pursuant to section 112(b) [1], section 112 of the Act provides the underlying authority for controlling HAP emissions that are not criteria pollutants. As a legal matter, no additional program approval by EPA is required in order for these criteria pollutant limits to be recognized as federally enforceable.

EPA has determined that the five approval criteria for approving FESOP programs into the SIP, as specified in the June 28, 1989 **Federal Register** notice, are also appropriate for evaluating and approving the programs under section 112(l). The June 28, 1989 notice does not address HAP because it was written prior to the 1990 amendments to section 112 (which injected the concept of major HAP sources versus non-major or area HAP sources into the permit) and not because it establishes requirements unique to criteria pollutants. Hence, the five criteria outlined above are applicable to FESOP approvals under section 112(l).

In addition to meeting the criteria in the June 28, 1989 notice, a FESOP program that will control HAP emissions must meet the statutory criteria for approval under section 112(l)(5). Section 112(l)(5) allows EPA to approve a program only if it: (1) Contains adequate authority to assure compliance with any section 112 standard or requirement; (2) provides for adequate resources; (3) provides for an expeditious schedule for assuring compliance with section 112 requirements; and (4) is otherwise likely to satisfy the objectives of the Act.

The EPA plans to codify the approval criteria for programs limiting potential to emit of HAP in subpart E of part 63 (Subpart E), the regulations promulgated to implement section 112(l) of the Act. The EPA currently anticipates that these criteria, as they apply to FESOP programs controlling HAP, will mirror those set forth in the June 28, 1989 notice, with the addition that the state's authority must extend to all HAP, instead of, or in addition to, VOC's and PM–10. The EPA currently anticipates that FESOP programs that are approved

[1] The EPA intends to issue guidance addressing the technical aspects of how these criteria pollutant limits may be recognized for purposes of limiting a source's potential to emit of HAP to below section 112 major source levels.

pursuant to section 112(l) prior to the Subpart E revisions will have had to meet these criteria, and hence, will not be subject to any further approval action.

The EPA believes it has authority under section 112(l) to approve programs to limit potential to emit of HAP directly under section 112(l) prior to this revision to Subpart E. Section 112(l)(5) requires EPA to disapprove programs that are inconsistent with guidance required to be issued under section 112(l)(2). This might be read to suggest that the ''guidance'' referred to in section 112(l)(2) was intended to be a binding rule. Even under this interpretation, the EPA does not believe that section 112(l) requires this rulemaking to be comprehensive. That is, it need not address all instances of approval under section 112(l). Given the severe timing problems posed by impending deadlines set forth in MACT standards and for submittal of title V applications, EPA believes it is reasonable to read section 112(l) to allow for approval of programs to limit potential to emit prior to issuance of a rule specifically addressing this issue.

EPA proposes approval of Mojave Desert's synthetic minor program pursuant to section 112(l) because the program meets all of the approval criteria specified in the June 28, 1989 **Federal Register** notice and in section 112(l)(5) of the Act. Please refer to the Technical Support Document for a complete discussion of how the June 28, 1989 criteria are met by the Mojave Desert. Regarding the statutory criteria of section 112(l)(5) referred to above, the EPA believes Mojave Desert's synthetic minor program contains adequate authority to assure compliance with section 112 requirements since the third criterion of the June 28, 1989 notice is met: the program does not provide for waiving any section 112 requirement. Sources would still be required to meet section 112 requirements applicable to non-major sources. Furthermore, EPA believes that Mojave Desert's synthetic minor program provides for an expeditious schedule for assuring compliance because it allows a source to establish a voluntary limit on potential to emit and avoid being subject to a federal Clean Air Act requirement applicable on a particular date. Nothing in Mojave Desert's program would allow a source to avoid or delay compliance with a federal requirement if it fails to obtain the appropriate federally enforceable limit by the relevant deadline. Finally, Mojave Desert's synthetic minor program is consistent with the objectives of the section 112 program because its purpose is to enable sources to obtain federally enforceable limits on potential to emit to avoid major source classification under section 112. The EPA believes this purpose is consistent with the overall intent of section 112, which is to decrease the amount of HAP being emitted; by committing to stay below a certain emission level for HAP, a source with a synthetic minor permit is achieving this goal.

III. Administrative Requirements

A. Request for Public Comments

The EPA is requesting comments on all aspects of this proposed interim approval. Copies of Mojave Desert's submittal and other information relied upon for the proposed interim approval are contained in a docket maintained at the EPA Regional Office. The docket is an organized and complete file of all the information submitted to, or otherwise considered by, EPA in the development of this proposed interim approval. The principal purposes of the docket are:

(1) To allow interested parties a means to identify and locate documents so that they can effectively participate in the approval process, and

(2) To serve as the record in case of judicial review. The EPA will consider any comments received by August 2, 1995.

B. Executive Order 12866

The Office of Management and Budget has exempted this action from Executive Order 12866 review.

C. Regulatory Flexibility Act

The EPA's actions under sections 502, 110, and 112 of the Act do not create any new requirements, but simply address operating permit programs submitted to satisfy the requirements of 40 CFR part 70. Because this action does not impose any new requirements, it does not have a significant impact on a substantial number of small entities.

Unfunded Mandates

Under Section 202 of the Unfunded Mandates Reform Act of 1995 (''Unfunded Mandates Act''), signed into law on March 22, 1995, EPA must prepare a budgetary impact statement to accompany any proposed or final rule that includes a Federal mandate that may result in estimated costs to state, local, or tribal governments in the aggregate; or to the private sector, of $100 million or more. Under Section 205, EPA must select the most cost-effective and least burdensome alternative that achieves the objectives of the rule and is consistent with statutory requirements. Section 203 requires EPA to establish a plan for informing and advising any small governments that may be significantly or uniquely impacted by the rule.

EPA has determined that the proposed approval action promulgated today does not include a federal mandate that may result in estimated costs of $100 million or more to either state, local, or tribal governments in the aggregate, or to the private sector. This proposed federal action approves pre-existing requirements under state or local law, and imposes no new federal requirements. Accordingly, no additional costs to state, local, or tribal governments, or to the private sector, result from this action.

List of Subjects 40 CFR Part 52

Environmental protection, Air pollution control, Carbon monoxide, Hydrocarbons, Intergovernmental relations, Lead, Nitrogen dioxide, Ozone, Particulate matter, Sulfur oxides, Volatile organic compounds.

40 CFR Part 70

Administrative practice and procedure, Air pollution control, Environmental protection, Hazardous substances, Intergovernmental relations, Operating permits, Reporting and recordkeeping requirements.

Authority: 42 U.S.C. 7401–7671q.

Dated: June 23, 1995.

David P. Howekamp,

Acting Regional Administrator.

[FR Doc. 95–16276 Filed 6–30–95; 8:45 am]

BILLING CODE 6560–50–P

---

40 CFR Part 70

[KS–001; AD-FRL–5252–2]

Clean Air Act Proposed Full Approval of Operating Permits Program; State of Kansas, and Delegation of 112(l) Authority

AGENCY: Environmental Protection Agency (EPA).

ACTION: Proposed full approval.

SUMMARY: The EPA proposes full approval of the Operating Permits Program submitted by the state of Kansas, for the purpose of complying with Federal requirements for states which develop, and submit to EPA, programs for issuing operating permits to all major stationary sources and to certain other sources. This notice explains EPA's rationale for the proposed action, and identifies several revisions to the program which must be made before EPA can take final action to approve it.

DATES: Comments on this proposed action must be received in writing by August 2, 1995.

ADDRESSES: Comments should be addressed to Wayne A. Kaiser at the address below. Copies of the Kansas submittal and other supporting information used in developing the proposed rule are available for inspection at the U.S. Environmental Protection Agency, Region VII, Air Branch, 726 Minnesota Avenue, Kansas City, Kansas 66101.

FOR FURTHER INFORMATION CONTACT: Wayne A. Kaiser at (913) 551–7603.

SUPPLEMENTARY INFORMATION:

I. Background and Purpose

A. Introduction

As required under Title V of the Clean Air Act (the Act'') as amended (1990), EPA has promulgated rules which define the minimum elements of an approvable state operating permits program, and the corresponding standards and procedures by which the EPA will approve, oversee, and withdraw approval of state operating permits programs (see 57 FR 32250 (July 21, 1992)). These rules are codified at 40 Code of Federal Regulations (CFR) part 70. Title V requires states to develop, and submit to EPA, programs for issuing these operating permits to all major stationary sources and to certain other sources.

The Act requires that states develop and submit these programs to EPA by November 15, 1993, and that EPA act to approve or disapprove each program within one year after receiving the submittal. The EPA's program review occurs pursuant to section 502 of the Act and the part 70 regulations, which together outline criteria for approval or disapproval. Where a program substantially, but not fully, meets the requirements of part 70, EPA may grant the program interim approval for a period of up to two years. If EPA has not fully approved a program by two years after the November 15, 1993, date, or by the end of an interim period, it must establish and implement a Federal program.

II. Proposed Action and Implications

A. Analysis of Submission by State Authority

1. Support Materials

The Governor of Kansas submitted an administratively and technically complete Title V Operating permit program on December 12, 1994. EPA deemed the program submittal complete in a letter to the governor on January 26, 1995. Comments noting deficiencies in the Kansas program were sent to the state in a letter dated February 22, 1995. The state responded in letters dated April 7 and April 17, 1995.

The program submittal includes a legal opinion from the Attorney General of Kansas stating that the laws of the state provide adequate legal authority to carry out all aspects of the program, and a description of how the state intends to implement the program. The submittal additionally contains evidence of proper adoption of the program regulations, permit application forms, a data management system, and a permit fee demonstration.

2. Program Description

The Governor's letter states that the entire geography of Kansas will be covered by this program and that the state will not administer the program on any Indian lands. EPA will administer the Title V program on Indian lands in Kansas. The letter also states that the Kansas Department of Health and Environment (KDHE) will be the official permitting authority responsible for implementation of the program. Finally, the letter requests approval and delegation of authority to implement section 112(l) of the Act.

In addition to the state's class I Title V permit rules, the state is establishing a State Implementation Plan (SIP) based permit system for creating Federally enforceable limitations, called the class II permit. This permit mechanism will allow sources to avoid having to obtain a part 70 operating permit. Finally, the state is requiring all air emission sources not qualifying for a class I or class II permit to obtain a class III permit.

The state has been collecting emission fees for two years, which have been used for ''ramp-up'' activities, including the hiring of additional staff and funding of a Small Business Assistance Program. The state provided a resource demonstration, discussed later, to justify deviating from the presumptive minimum of $25 per ton, Consumer Price Index (CPI) adjusted. The state is also authorized to collect fees for non-Title V program activities.

3. Regulations and Program Implementation

Except as noted below, the state submittal, including the core operating permit regulations (Kansas Administrative Regulations (K.A.R.) 28–19–500 through 518), meets the requirements of 40 CFR 70.2 and 70.3 with respect to applicability; 40 CFR 70.4, 70.5, and 70.6 with respect to permit content including operational flexibility; 40 CFR 70.5 with respect to complete application forms and criteria which define insignificant activities; 40 CFR 70.7 with respect to public participation and minor permit modifications; and 40 CFR 70.11 with respect to requirements for enforcement authority.

Areas in which the Kansas program is deficient and corrective action is required prior to full approval are discussed below. Although failure to correct the program would require EPA to disapprove it, Kansas has indicated that it can make the required changes and submit them to EPA. Readers may refer to the Technical Support Document (TSD) accompanying this rulemaking for a detailed explanation of each comment and the corrective actions required of the state.

a. Rule revisions. K.A.R. 28–19–7, General provisions; definitions. The state definition of applicable requirement as presently written requires that an SIP or Federal Implementation Plan requirement must be part of the Kansas air quality regulations. The state has SIP requirements, such as source-specific permits, and local agency air regulations, which are applicable requirements but are not in the Kansas air quality regulations. The state has committed to revise K.A.R. 28–19–7(e)(1) to remove this restriction.

Secondly, the applicable requirement definition does not include construction permits issued pursuant to rules K.A.R. 28–19–300, and its predecessor, K.A.R. 28–19–14. The state has committed to add a paragraph (e)(2)(D) to the definition of applicable requirement to correct this omission. These revisions are necessary to meet EPA's definition of applicable requirement in 70.2.

K.A.R. 28–19–511. Class I operating permits; application contents. Paragraph (b) details information which must be included in a permit application. This paragraph must be revised in three areas. First, 511(b)(3) must be revised to clarify that fugitive emissions of regulated pollutants must be included in the permit application. Second, 511(b)(3)(A) must be revised to clarify that the state maintains a list of insignificant activities which does not need to be included on the application form. The state has decided to remove this list from the application forms but maintain it separately. The state must also submit its list of insignificant activities to EPA for approval. And third, 511(b)(16) must be revised to clarify that compliance plans apply to all sources. As written, the rule could be read to apply only to acid rain sources. These revisions are necessary to meet the requirements for applications for

Title V permits in 70.3(d), 70.5(c), 70.5(c)(2), and 70.4(c)(8).

K.A.R. 28–19–512. Class I operating permits; permit content. Rule 512(a)(7) requires that ''where a permit contains an emission limitation which is an alternative to an emission limitations contained in'' the SIP, the alternative meet certain requirements. Unlike 70.6(a)(1)(iii), this provision is not qualified by the statement that the SIP must expressly allow for alternative limits. The state has committed to revise its rule to meet this requirement. Rule 512(a)(18), pertaining to the terms and conditions for trading of emissions, does not require the source to provide the state and EPA with a seven-day notice as required by 70.4(b)(12)(iii). The state has committed to revise its rule to meet this requirement.

K.A.R. 28–19–518. Class I operating permits; complete applications. Rule 518(a) does not contain a requirement, consistent with 70.7(b)(1), that an application be both ''timely'' filed and complete. The state has committed to revise this rule to include the ''timely'' component. Secondly, rule 518(b), pertaining to the determination of a complete application, does not specify what must be included in a permit application in order to be deemed complete. The state has committed to add a statement to the effect that a complete application is one which substantially complies with the requirements of K.A.R. 28–19–511, Class I operating permits; application contents.

3. Other issues

K.A.R. 28–19–510. Class I operating permits; application timetable. This rule requires a complete and timely application to be submitted not later than the date specified by the KDHE, as published in the *Kansas Register,* on which the source becomes subject to the permitting program, and for sources operational at the time of the effective date of the operating permit program, no later than the date specified by the KDHE as published in the *Kansas Register.*

As a practical matter, Kansas will be notified by EPA as soon as the anticipated date of publication of program approval in the **Federal Register** becomes known. Kansas has committed to publishing its application schedule in the *Kansas Register* within the 30-day period preceding the effective date of the program. Thus, the state will have the full year in which to receive applications. Kansas has provided a sample *Kansas Register* notice which contains the draft application schedule. Kansas plans to request applications in a staggered, three-tiered, SIC code-based approach, which ensures that all applications are received within one year of program approval pursuant to 70.5(a). EPA concurs with this approach.

K.A.R. 28–19–513. Class I operating permits; permit amendment, modification, or reopening and changes not requiring a permit action. 70.7(d)(1)(v) states that part 70 permit revisions which incorporate the provisions of preconstruction permits may be accomplished through the administrative amendment process, but only if the preconstruction permit is issued under an EPA-approved program covering the relevant procedural requirements substantially similar to those in part 70. K.A.R. 28–19–513(a)(1)(E) includes a similar provision. However, the Kansas preconstruction program does not contain procedures substantially similar to the relevant part 70 procedures and has not been approved by EPA. The Kansas Attorney General, in his April 7, 1995, supplemental opinion, has stated that the K.A.R. 513(a)(1)(E) provision cannot be used to administratively amend permits, until EPA approves revisions to the Kansas New Source Review program incorporating the relevant part 70 procedural requirements. Therefore, EPA believes this provision is approvable.

Implementation Agreement (I.A.)

The state has elected to include in an I.A., rather than regulation, time lines for state action on a number of provisions relating to permit processing. EPA believes that since most of the deadlines to be established in the I.A. are for the benefit of EPA, the deadlines may be in the I.A. rather than the regulation.

The state has committed to a schedule for adopting and submitting the required rule revisions, for submitting its insignificant activities list to EPA for approval, and has committed to finalizing an I.A. with EPA which contains certain commitments and information which EPA considers necessary for approval. If the state revises the submission to correct the deficiencies as described in this notice and no other program deficiencies are identified during the comment period which preclude full approval, EPA's final action will be one of full approval. Otherwise, EPA will confer disapproval.

4. Fee Demonstration

The state provided a detailed fee demonstration because the emissions fee, $20 per ton, is below the presumptive minimum of $25 plus CPI. The KDHE provided a list of sources and the estimated actual and potential emissions from each source with a projected total revenue. This estimate adequately covers the program's anticipated operating costs if the $20 fee is maintained. If this fee is reduced, an additional demonstration will be required. A four-year estimate of resources and costs was also submitted. The state has provided for separate cost accounting procedures to ensure that fees collected are used solely for the part 70 program. The state commits to conducting periodic auditing reports and providing copies to EPA.

5. Provisions Implementing the Requirements of Other Titles of the Act

a. Authority and/or commitments for section 112 implementation. Kansas has demonstrated in its program submittal adequate legal authority to implement and enforce all section 112 requirements through the Title V permit.

This legal authority is contained in Kansas' enabling legislation and in regulatory provisions defining ''applicable requirements,'' and states that the permit must incorporate all applicable requirements. EPA has determined that this legal authority is sufficient to allow Kansas to issue permits that ensure compliance with all section 112 requirements. EPA is interpreting the above legal authority to mean that Kansas is able to carry out all section 112 activities. For further rationale on this interpretation, please refer to the TSD accompanying this rulemaking and the April 13, 1993, guidance memorandum titled ''Title V Program Approval Criteria for Section 112 Activities,'' signed by John Seitz.

b. Section 112 (g)—Case-by-Case Maximum Achievable Control Technology (MACT) For Modified/Constructed and Reconstructed Major Toxic Sources. The EPA issued an interpretive notice on February 14, 1995 (60 FR 8333), which outlines EPA's revised interpretation of 112(g) applicability. The notice postpones the effective date of 112(g) until after EPA has promulgated a rule addressing that provision. The notice sets forth in detail the rationale for the revised interpretation.

The section 112(g) interpretive notice explains that EPA is still considering whether the effective date of section 112(g) should be delayed beyond the date of promulgation of the Federal rule so as to allow states time to adopt rules implementing the Federal rule, and that EPA will provide for any such additional delay in the final section 112(g) rulemaking. Unless and until EPA provides for such an additional postponement of section 112(g), Kansas

must have a Federally enforceable mechanism for implementing section 112(g) during the period between promulgation of the Federal section 112(g) rule and adoption of implementing Federal regulations.

The EPA is aware that Kansas lacks a program designed specifically to implement section 112(g). However, Kansas does have a program for review of new and modified hazardous air pollutant sources that can serve as an adequate implementation vehicle during the transition period, because it would allow Kansas to select control measures that would meet MACT, as defined in section 112, and incorporate these measures into a Federally enforceable preconstruction permit.

EPA is approving Kansas' preconstruction permitting program under the authority of Title V and part 70, solely for the purpose of implementing section 112(g) to the extent necessary during the transition period between 112(g) promulgation and adoption of a state rule implementing EPA's section 112(g) regulations. Although section 112(l) generally provides authority for approval of state air programs to implement section 112(g), Title V and section 112(g) provide for this limited approval because of the direct linkage between the implementation of section 112(g) and Title V. The scope of this approval is narrowly limited to section 112(g) and does not confer or imply approval for purposes of any other provision under the Act (e.g., section 110). This approval will be without effect if EPA decides in the final section 112(g) rule that sources are not subject to the requirements of the rule until state regulations are adopted. The duration of this approval is limited to 18 months following promulgation by EPA of the 112(g) rule to provide adequate time for the state to adopt regulations consistent with the Federal requirements.

c. Section 112(l)—State Air Toxics Programs. Requirements for approval, specified in 40 CFR 70.4(b), encompass section 112(l)(5) approval requirements for delegation of section 112 standards as promulgated by EPA as they apply to part 70 sources. Section 112(l)(5) requires that the state's program contain adequate authorities, adequate resources for implementation, and an expeditious compliance schedule, which are also requirements under part 70. Kansas has demonstrated that it meets these requirements. Therefore, the EPA is proposing to grant approval under section 112(l)(5) and 40 CFR 63.91 to Kansas for its program mechanism for receiving delegation of all existing and future section 112(d) standards for both part 70 and non-part 70 sources, and section 112 infrastructure programs, that are unchanged from Federal rules as promulgated. Kansas has informed EPA that it intends to accept delegation of section 112 standards through adoption by reference. In addition, EPA is also proposing delegation of all existing standards and programs under 40 CFR Parts 61 and 63 for part 70 and non-part 70 sources.

Kansas also requested that the program approval under 112(l) include its pre-1990 amendments' National Emission Standard for Hazardous Air Pollutants' program, and approval of its program to regulate asbestos, Part 61, subpart M. Our proposed approval covers the entire Kansas program under 112(l).

d. Title IV/Acid Rain. The legal requirements for approval under the Title V operating permits program for a Title IV program were cited in EPA guidance distributed on May 21, 1993, titled ''Title V-Title IV Interface Guidance for States.'' Kansas has met the criteria of this guidance and has adopted by reference acid rain rules at 40 CFR part 72.

B. Proposed Actions

1. Full Approval

EPA is proposing to grant full approval contingent upon: first, the state adopting and submitting the revisions to: (1) K.A.R. 28–19–7, General Provisions; definitions, (2) K.A.R. 28–19–511, Class I operating permits; applications contents, (3) K.A.R. 28–19–512, Class I operating permits; permit content, (4) K.A.R. 28–19–518, Class I operating permits, complete applications; second, the state submitting its insignificant activities list to EPA for approval; and third, finalization of an I.A. with EPA.

2. Program for Straight Delegation of Section 112 Standards

As discussed above, EPA is proposing to grant approval under section 112(l)(5) and 40 CFR 63.91 to Kansas for its program mechanism for receiving delegation of all existing and future section 112(d) standards for both part 70 and non-part 70 sources, and infrastructure programs under section 112 that are unchanged from Federal rules as promulgated. In addition, EPA proposes to delegate existing standards under 40 CFR Parts 61 and 63 for both part 70 and non-part 70 sources.

III. Administrative Requirements

A. Request for Public Comments

The EPA is requesting comments on all aspects of this proposed rule. Copies of the state's submittal and other information relied upon for the proposed approval are contained in a docket maintained at the EPA Regional Office. The docket is an organized and complete file of all the information submitted to, or otherwise considered by, EPA in the development of this proposed rulemaking. The principal purposes of the docket are:

1. To allow interested parties a means to identify and locate documents for participating in the rulemaking process, and

2. To serve as the record in case of judicial review. The EPA will consider any comments received by August 2, 1995.

B. Executive Order 12866

The Office of Management and Budget has exempted this regulatory action from Executive Order 12866 review.

C. Regulatory Flexibility Act

EPA's actions under section 502 of the Act do not create any new requirements, but simply address operating permits programs submitted to satisfy the requirements of 40 CFR part 70. Because this action does not impose any new requirements, it does not have a significant impact on a substantial number of small entities.

D. Unfunded Mandates

Under Sections 202, 203, and 205 of the Unfunded Mandates Reform Act of 1995 (''Unfunded Mandates Act''), signed into law on March 22, 1995, EPA must undertake various actions in association with proposed or final rules that include a Federal mandate that may result in estimated costs of $100 million or more to the private sector, or to state, local, or tribal governments in the aggregate.

Through submission of this state operating permit program the state and any affected local or tribal governments have elected to adopt the program provided for under Title V of the Clean Air Act. These rules may bind state, local, and tribal governments to perform certain actions and also require the private sector to perform certain duties. To the extent that the rules being proposed for approval by this action will impose new requirements, sources are already subject to these regulations under state law. Accordingly, no additional costs to state, local, or tribal governments, or to the private sector, result from this action. EPA has also

determined that this proposed action does not include a mandate that may result in estimated costs of $100 million or more to state, local, or tribal governments in the aggregate or to the private sector.

List of Subjects in 40 CFR Part 70

Environmental protection, Administrative practice and procedure, Air pollution control, Intergovernmental relations, Operating permits, Reporting and recordkeeping requirements.

Authority: 42 U.S.C. 7401—7671q.

Dated: June 22, 1995.

Dennis Grams,

Regional Administrator.

[FR Doc. 95–16277 Filed 6–30–95; 8:45 am]

BILLING CODE 6560–50–P

DEPARTMENT OF DEFENSE

48 CFR Parts 206 and 207

Defense Federal Acquisition Regulation Supplement; Class Justifications and Approvals

AGENCY: Department of Defense (DoD).

ACTION: Proposed rule with request for comment.

SUMMARY: The Director of Defense Procurement is proposing to amend the Defense Federal Acquisition Regulation Supplement (DFARS) to provide guidance regarding the use of class justifications and approvals for other than full and open competition.

DATES: Comments on the proposed rule should be submitted in writing to the address shown below on or before September 1, 1995, to be considered in the formulation of the final rule.

ADDRESSES: Intersted parties should submit written comments to: Defense Acquisition Regulations Council, Attn: Mr. R.G. Layser, PDUSD (A&T) DP (DAR), IMD 3D139, 3062 Defense Pentagon, Washington DC 20301–3062. Telefax number (703) 602–0350. Please cite DFARS Case 95–D009 in all correspondence related to this issue.

FOR FURTHER INFORMATION CONTACT: Mr. R.G. Layser, (703) 602–0131.

SUPPLEMENTARY INFORMATION:

A. Background

This proposed rule implements a recommendation of the Department of Defense Procurement Process Reform Process Action Team.

Subsection 6.303–1 of the Federal Acquisition Regulation permits execution of justifications and approvals for other than full and open competition on an individual or class basis. This proposed rule expands DoD guidance on class justifications and approvals to state class justifications may provide for award of multiple contracts extending across more than one program phase.

B. Regulatory Flexibility Act

This proposed rule is not expected to have a significant economic impact on a substantial number of small entities within the meaning of the Regulatory Flexibility Act, 5 U.S.C. 601, *et seq.*, because the use of class justifications and approvals is already permitted by the Federal Acquisition Regulation. This rule merely expands DFARS guidance to address the use of class justifications and approvals for multiple contracts extending across more than one program phase. An Initial Regulatory Flexibility Analysis has therefore not been performed. Comments are invited from small businesses and other interested parties. Comments from small entities concerning the affected DFARS subparts will also be considered in accordance with Section 610 of the Act. Such comments must be submitted separately and cite DFARS Case 95–D009 in correspondence.

C. Paperwork Reduction Act

The Paperwork Reduction Act does not apply because this proposed rule does not impose any new information collection requirements which require the approval of OMB under 44 U.S.C. 3501, *et seq.*

List of Subjects in 48 CFR 206 and 207

Government procurement.

Michele P. Peterson,

Executive Editor, Defense Acquisition Regulations Council.

Therefore, 48 CFR Parts 206 and 207 are proposed to be amended as follows:

1. The authority citation for 48 CFR Parts 206 and 207 is revised to read as follows:

Authority: 41 U.S.C. 421 and 48 CFR Chapter 1.

PART 206—COMPETITION REQUIREMENTS

2. Section 206.303–1 is amended by adding paragraph (c) to read as follows:

206.303–1 Requirements.

* * * * *

(c) When conditions warrant, a class justification may provide for award of multiple contracts extending across more than one program phase.

PART 207—ACQUISITION PLANNING

3. Section 207.102 is added to read as follows:

207.102 Policy.

When a class justification for other than full and open competition has been approved, planning for competition shall be accomplished consistent with the terms of that approval.

[FR Doc. 95–16161 Filed 6–30–95; 8:45 am]

BILLING CODE 5000–04–M

48 CFR Part 225

Defense Federal Acquisition Regulation Supplement; Tank and Automotive Forging Items

AGENCY: Department of Defense (DoD).

ACTION: Proposed rule with request for comment.

SUMMARY: The Director of Defense Procurement is proposing to amend the Defense Federal Acquisition Regulation Supplement (DFARS) to add an exception to the foreign source restrictions on the acquisition of forgings.

DATES: Comments on the proposed rule should be submitted in writing to the address shown below on or before September 1, 1995 to be considered in the formulation of the final rule.

ADDRESSES: Interested parties should submit written comments to: Defense Acquisition Regulations Council, Attn: Ms. Amy Williams, PDUSD(A&T)DP(DAR), IMD 3D139, 3062 Defense Pentagon, Washington DC 20301–3062. Telefax number (703) 602–0350. Please cite DFARS Case 95–D003 in all correspondence related to this issue.

FOR FURTHER INFORMATION CONTACT: Ms. Amy Williams, (703) 602–0131.

SUPPLEMENTARY INFORMATION:

A. Background

DFARS Subpart 225.71 contains foreign product restrictions which are based on policies designed to protect the defense industrial base. DFARS 225.7102 requires that certain categories of tank and automotive forging items be acquired from domestic sources to the maximum extent practicable. The policy in DFARS 225.7102 does not apply to acquisitions of forgings used for commercial vehicles or noncombat support military vehicles.

This proposed rule excludes forgings purchased as tank and automotive spare parts from the foreign source restrictions of DFARS 225.7102, except when it is known that the parts are for use in tanks only. This exclusion is needed to eliminate the potentially significant administrative burden of screening tank and automotive forging items purchased

as spare parts to determine which parts are to be used in tanks and are, therefore, subject to the foreign source restrictions.

B. Regulatory Flexibility Act

This proposed rule is not expected to have a significant economic impact on a substantial number of small entities within the meaning of the Regulatory Flexibility Act, 5 U.S.C. 601, *et seq.*, because the rule retains the policy of acquiring tank and automotive forging items from domestic sources to the maximum extent practicable. The new exception only applies to forging items purchased as tank and automotive spare parts, when the end use of the spare parts is unknown. An Initial Regulatory Flexibility Analysis has therefore not been performed. Comments are invited from small businesses and other interested parties. Comments from small entities concerning the affected DFARS subpart will be also considered in accordance with Section 610 of the Act. Such comments must be submitted separately and cite DFARS Case 95–D003 in correspondence.

C. Paperwork Reduction Act

The Paperwork Reduction Act does no apply because this proposed rule does not impose any new information collection requirements which require the approval of OMB under 44 U.S.C. 3501, *et seq.*

List of Subjects in 48 CFR Part 225

Government procurement.

Michele P. Peterson,

Executive Editor, Defense Acquisition Regulations Council.

Therefore, 48 CFR Part 225 is proposed to be amended as follows:

1. The authority citation for 48 CFR Part 225 is revised to read as follows:

Authority: 41 U.S.C. 421 and 48 CFR Chapter 1.

PART 225—FOREIGN ACQUISITION

2. Section 225.7102 is amended by revising the introductory text to read as follows:

225.7102 Policy.

DoD requirements for the following, including acquisitions for items containing the following, shall be acquired from domestic sources (as described in the clause at 252.225–7025) to the maximum extent practicable—

* * * * *

3. Section 225.7103 is amended by revising paragraph (e)(1); redesignating paragraph (e)(2) as (e)(3); and adding paragraph (e)(2) to read as follows:

225.7103 Exceptions.

* * * * *

(e) * * *

(1) Used for commercial vehicles or noncombat support military vehicles;

(2) Purchased as tank and automotive spare parts (except when it is known the spare parts are for use in tanks only); or

* * * * *

[FR Doc. 95–16160 Filed 6–30–95; 8:45 am]

BILLING CODE 5000–04–M

DEPARTMENT OF TRANSPORTATION

Federal Railroad Administration

49 CFR Part 225

[FRA Docket No. RAR–4, Notice No. 11]

RIN 2130–AA58

Railroad Accident Reporting

AGENCY: Federal Railroad Administration (FRA), DOT.

ACTION: Notice of decision to issue a supplemental notice of proposed rulemaking.

SUMMARY: In accordance with a notice published on December 27, 1994 (59 FR 66501), FRA held a public regulatory conference on January 30–February 2, 1995, in Washington, DC to further discuss issues related to its notice of proposed rulemaking (NPRM) on railroad accident reporting (59 FR 42880). Based on the alternative positions advanced at the conference, participants requested that FRA issue a second or supplemental NPRM to address those alternatives. Following the public regulatory conference, FRA published a notice on February 16, 1995 (60 FR 9001) that confirmed the March 10, 1995 deadline for comments. This notice also postponed FRA's decision whether or not to issue a supplemental NPRM until all comments were received and reviewed by FRA.

Subsequent review of the comments received by FRA revealed that a number of issues require further consideration before they can be properly resolved. FRA therefore believes that a supplemental NPRM would be warranted for the accident reporting rulemaking. The supplemental NPRM will address revised documentation requirements for the proposed Internal Control Plan; calculation of damage costs for rail equipment accidents and incidents for the determination of whether the threshold is met for FRA reporting purposes; and the proposed definition for the classification ''worker on duty'' as it pertains to ''contractors'' and ''volunteers'' performing safety-sensitive functions. FRA is also considering whether or not a meaningful or useful performance standard can be devised. If so, FRA will propose it in the supplemental NPRM.

In order to give interested parties the opportunity to comment, FRA anticipates that an informal public regulatory conference would be held in Washington, DC after issuance of the supplemental NPRM.

FOR FURTHER INFORMATION CONTACT: Marina C. Appleton, Trial Attorney, Office of Chief Counsel, FRA, 400 Seventh Street SW, Washington, DC 20590 (telephone 202–366–0628); or Robert Finkelstein, Chief, Systems Support Division, Office of Safety Analysis, Office of Safety, FRA, 400 Seventh Street SW, Washington, DC 20590 (telephone 202–366–2760).

Issued in Washington, DC, on June 27, 1995.

Jolene M. Molitoris,

Federal Railroad Administrator.

[FR Doc. 95–16244 Filed 6–30–95; 8:45 am]

BILLING CODE 4910–06–P

Notices

Federal Register
Vol. 60, No. 127
Monday, July 3, 1995

This section of the FEDERAL REGISTER contains documents other than rules or proposed rules that are applicable to the public. Notices of hearings and investigations, committee meetings, agency decisions and rulings, delegations of authority, filing of petitions and applications and agency statements of organization and functions are examples of documents appearing in this section.

DEPARTMENT OF AGRICULTURE

Food and Consumer Service

Child and Adult Care Food Program; National Average Payment Rates, Day Care Home Food Service Payment Rates and Administrative Reimbursement Rates for Sponsors of Day Care Homes for the Period July 1, 1995–June 30, 1996

AGENCY: Food and Consumer Service, USDA.

ACTION: Notice.

SUMMARY: This notice announces the annual adjustments to the national average payment rates for meals served in child care, outside-school-hours care and adult day care centers, the food service payment rates for meals served in day care homes, and the administrative reimbursement rates for sponsors of day care homes to reflect changes in the Consumer Price Index. Further adjustments are made to these rates to reflect the higher costs of providing meals in the States of Alaska and Hawaii. The adjustments contained in this notice are required by the statutes and regulations governing the Child and Adult Care Food Program (CACFP).

EFFECTIVE DATE: July 1, 1995.

FOR FURTHER INFORMATION CONTACT: Robert M. Eadie, Branch Chief, Policy and Program Development Branch, Child Nutrition Division, Food and Consumer Service, USDA, Alexandria, Virginia 22302, (703) 305–2620.

SUPPLEMENTARY INFORMATION: This program is listed in the Catalog of Federal Domestic Assistance under No. 10.558 and is subject to the provisions of Executive Order 12372, which requires intergovernmental consultation with State and local officials. (See 7 CFR Part 3015, Subpart V, and final rule related notice published at 48 FR 29114, June 24, 1983.)

This notice imposes no new reporting or recordkeeping provisions that are subject to Office of Management and Budget review in accordance with the Paperwork Reduction Act of 1980 (44 U.S.C. 3587).

This action is not a rule as defined by the Regulatory Flexibility Act (5 U.S.C. 601–612) and thus is exempt from the provisions of that Act. This notice has been determined to be exempt under Executive Order 12866.

Definitions

The terms used in this notice shall have the meanings ascribed to them in the regulations governing the CACFP (7 CFR Part 226).

Background

Pursuant to Sections 4, 11 and 17 of the National School Lunch Act (NSLA) (42 U.S.C. 1753, 1759a and 1766), Section 4 of the Child Nutrition Act of 1966 (42 U.S.C. 1773) and Sections 226.4, 226.12 and 226.13 of the regulations governing the CACFP (7 CFR Part 226), notice is hereby given of the new payment rates for participating institutions. These rates shall be in effect during the period July 1, 1995–June 30, 1996.

As provided for under the NSLA and the Child Nutrition Act of 1966, all rates in the CACFP must be prescribed annually on July 1 to reflect changes in the Consumer Price Index for the most recent 12-month period. In accordance with this mandate, the Department last published the adjusted national average payment rates for centers, the food service payment rates for day care homes and the administrative reimbursement rates for sponsors of day care homes on July 6, 1994 at 59 FR 34590 (for the period July 1, 1994–June 30, 1995). The payment rates for the period July 1, 1995–June 30, 1996 are:

ALL STATES EXCEPT ALASKA AND HAWAII

Meals Served in CENTERS—Per Meal Rates *in Dollars or Fractions thereof:*

Breakfasts:	
Paid	$.1950
Free	.9975
Reduced	.6975
Lunches and Suppers: [1]	
Paid	.1725
Free	1.7950
Reduced	1.3950

ALL STATES EXCEPT ALASKA AND HAWAII—Continued

Supplements:	
Paid	.0450
Free	.4925
Reduced	.2475

Meals Served in DAY CARE HOMES—Per Meal Rates *in Dollars or Fractions thereof:*

Breakfasts	.8450
Lunches and Suppers	1.5375
Supplements	.4575

ADMINISTRATIVE REIMBURSEMENT Rates for Sponsoring Organizations of Day Care Homes—Per Home/Per Month Rates *in Dollars:*

Initial 50 day care homes	71
Next 150 day care homes	54
Next 800 day care homes	42
Additional day care homes	37

[1] These rates do not include the value of commodities (or cash-in-lieu of commodities) which institutions receive as additional assistance for each lunch or supper served to participants under the program. Notices announcing the value of commodities and cash-in-lieu of commodities are published separately in the FEDERAL REGISTER.

Pursuant to Section 12(f) of the NSLA (42 U.S.C. 1760(f)), the Department adjusts the payment rates for participating institutions in the States of Alaska and Hawaii. The new payment rates for Alaska are as follows: ALASKA

ALASKA

Alaska—Meals Served in CENTERS—Per Meal Rates *in Dollars or Fractions thereof:*

Breakfasts:	
Paid	.28
Free	1.5775
Reduced	1.2775
Lunches and Suppers: [1]	
Paid	.28
Free	2.91
Reduced	2.51
Supplements:	
Paid	.0725
Free	.8000
Reduced	.4000

Alaska—Meals Served in DAY CARE HOMES—Per Meal Rates *in Dollars or Fractions thereof:*

Breakfasts	1.33
Lunches and Suppers	2.4925
Supplements	.7425

ALASKA—Continued

Alaska—ADMINISTRATIVE REIMBURSEMENT Rates for Sponsoring Organizations of Day Care Homes-Per Home/Per Month Rates *in Dollars:*

Initial 50 day care homes	115
Next 150 day care homes	88
Next 800 day care homes	69
Additional day care homes ...	60

[1] These rates do not include the value of commodities (or cash-in-lieu of commodities) which institutions receive as additional assistance for each lunch or supper served to participants under the program. Notices announcing the value of commodities and cash-in-lieu of commodities are published separately in the FEDERAL REGISTER.

The new payment rates for Hawaii are as follows:

HAWAII

Hawaii—Meals Served in CENTERS—Per Meal Rates *in Dollars or Fractions thereof:*

Breakfasts:	
Paid	.2175
Free	1.1575
Reduced	.8575
Lunches and Suppers: [1]	
Paid	.2025
Free	2.1025
Reduced	1.7025
Supplements:	
Paid	.0525
Free	.5775
Reduced	.2875

Hawaii—Meals Served in DAY CARE HOMES—Per Meal Rates *in Dollars or Fractions thereof:*

Breakfasts	.9775
Lunches and Suppers	1.80
Supplements	.5375

Hawaii—ADMINISTRATIVE REIMBURSEMENT Rates for Sponsoring Organizations of Day Care Homes—Per Home/Per Month Rates *in Dollars:*

Initial 50 day care homes	83
Next 150 day care homes	63
Next 800 day care homes	50
Additional day care homes ...	44

[1] These rates do not include the value of commodities (or cash-in-lieu of commodities) which institutions receive as additional assistance for each lunch or supper served to participants under the program. Notices announcing the value of commodities and cash-in-lieu of commodities are published separately in the FEDERAL REGISTER.

The changes in the national average payment rates and the food service payment rates for day care homes reflect a 2.27 percent increase during the 12-month period May 1994 to May 1995 (from 145.3 in May 1994 to 148.6 in May 1995) in the food away from home series of the Consumer Price Index for All Urban Consumers, published by the Bureau of Labor Statistics of the Department of Labor. The changes in the administrative reimbursement rates for sponsoring organizations of day care homes reflect a 3.18 percent increase during the 12-month period May 1994 to May 1995 (from 147.5 in May 1994 to 152.2 in May 1995) in the series for all items of the Consumer Price Index for All Urban Consumers, published by the Bureau of Labor Statistics of the Department of Labor.

The total amount of payments available to each State agency for distribution to institutions participating in the program is based on the rates contained in this notice.

Authority: Sections 4(b)(2), 11(a), 17(c) and 17(f)(3)(B) of the National School Lunch Act, as amended (42 U.S.C. 1753, 1759(a), 1766) and section 4(b)(1)(B) of the Child Nutrition Act of 1966, as amended (42 U.S.C. 1773b).

Dated: June 26, 1995.

William Ludwig,

Administrator.

[FR Doc. 95–16271 Filed 6–30–95; 8:45 am]

BILLING CODE 3410–30–P

National School Lunch, Special Milk, and School Breakfast Programs; National Average Payments/Maximum Reimbursement Rates

AGENCY: Food and Consumer Service, USDA.

ACTION: Notice.

SUMMARY: This Notice announces the annual adjustments to: (1) The ''national average payments,'' the amount of money the Federal Government provides States for lunches, meal supplements and breakfasts served to children participating in the National School Lunch and School Breakfast Programs; (2) the ''maximum reimbursement rates,'' the maximum per lunch rate from Federal funds that a State can provide a school food authority for lunches served to children participating in the National School Lunch Program; and (3) the rate of reimbursement for a half-pint of milk served to nonneedy children in a school or institution which participates in the Special Milk Program for Children. The payments and rates are prescribed on an annual basis each July. The annual payments and rates adjustments for the National School Lunch and School Breakfast Programs reflect changes in the Food Away From Home series of the Consumer Price Index for All Urban Consumers. The annual rate adjustment for the Special Milk Program reflects changes in the Producer Price Index for Fluid Milk Products. These payments and rates are in effect from July 1, 1995 through June 30, 1996.

EFFECTIVE DATE: July 1, 1995.

FOR FURTHER INFORMATION CONTACT: Robert M. Eadie, Chief, Policy and Program Development Branch, Child Nutrition Division, FCS, USDA, Alexandria, Virginia 22302, (703) 305–2620.

SUPPLEMENTARY INFORMATION: These programs are listed in the Catalog of Federal Domestic Assistance under No. 10.553, No. 10.555 and No. 10.556 and are subject to the provisions of Executive Order 12372, which requires intergovernmental consultation with State and local officials. (See 7 CFR part 3015, subpart V, and the final rule related notice published at 48 FR 29114, June 24, 1983.)

This action is not a rule as defined by the Regulatory Flexibility Act (5 U.S.C. 601–612) and thus is exempt from the provisions of that Act. This notice has been determined to be exempt under Executive Order 12866. In accordance with the Paperwork Reduction Act of 1980 (44 U.S.C. 3507), no new recordkeeping or reporting requirements have been included that are subject to approval from the Office of Management and Budget.

Background

Special Milk Program for Children

Pursuant to section 3 of the Child Nutrition Act of 1966, as amended (42 U.S.C. 1772), the Department announces the rate of reimbursement for a half-pint of milk served to noneedy children in a school or institution which participates in the Special Milk Program for Children. This rate is adjusted annually to reflect changes in the Producer Price Index for Fluid Milk Products (Code 0231), published by the Bureau of Labor Statistics of the Department of Labor.

For the period July 1, 1995 to June 30, 1996, the rate of reimbursement for a half-pint of milk served to a nonneedy child in a school or institution which participates in the Special Milk Program is 11.25 cents. This reflects an increase of 1.4 percent in the Producer Price Index for Fluid Milk Products (Code 0231) from May 1994 to May 1995 (from a level of 121.1 in May 1994 to 122.8 in May 1995).

As a reminder, schools or institutions with pricing programs which elect to serve milk free to eligible children continue to receive the average cost of a half-pint of milk (the total cost of all milk purchased during the claim period divided by the total number of

purchased half-pints) for each half-pint served to an eligible child.

National School Lunch and School Breakfast Programs

Pursuant to sections 11 and 17A of the National School Lunch Act, (42 U.S.C. 1759a and 1766a), and section 4 of the Child Nutrition Act of 1966, (42 U.S.C. 1773), the Department annually announces the adjustments to the National Average Payment Factors and to the maximum Federal reimbursement rates for meals and supplements served to children participating in the National School Lunch Program. Adjustments are prescribed each July 1, based on changes in the Food Away From Home series of the Consumer Price Index for All Urban Consumers, published by the Bureau of Labor Statistics of the Department of Labor. The changes in the national average payment rates for schools and residential child care institutions for the period July 1, 1995 through June 30, 1996 reflect a 2.27 percent increase in the Price Index during the 12-month period May 1994 to May 1995 (from a level of 145.3 in May 1994 to 148.6 in May 1995).

Lunch Payment Factors

Section 4 of the National School Lunch Act (42 U.S.C. 1753) provides general cash for food assistance payments to States to assist schools in purchasing food. There are two section 4 National Average Payment factors for lunches served under the National School Lunch Program. The lower payment factor applies to lunches served by school food authorities in which less than 60 percent of the lunches served in the school lunch program during the second preceding school year were served free or at a reduced price. The higher payment factor applies to lunches served by school food authorities in which 60 percent or more of the lunches served during the second preceding school year were served free or at a reduced price. To supplement these section 4 payments, section 11 of the National School Lunch Act provides special cash assistance payments to aid schools in providing free and reduced price lunches. The section 11 National Average Payment Factor for each reduced price lunch served is set at 40 cents less than the factor for each free lunch.

As authorized under sections 8 and 11 of the National School Lunch Act (42 U.S.C. 1757, 1759a), maximum reimbursement rates for each type of lunch are prescribed by the Department in this Notice. These maximum rates ensure equitable disbursement of Federal funds to school food authorities.

Meal Supplement Payments in Afterschool Care Programs

Section 17A (42 U.S.C. 1766a) of the National School Lunch Act authorizes elementary and secondary schools to be reimbursed for meal supplements as part of the National School Lunch Program if they meet the following requirements: (1) Operate school lunch programs under the National School Lunch Act; (2) sponsor afterschool care programs; and (3) were participating in the Child and Adult Care Food Program as of May 15, 1989. The reimbursement rates for supplements served in Afterschool Care Programs under the National School Lunch Program are the same as the rates for supplements served in centers under the Child and Adult Care Food Program.

Breakfast Payment Factors

Section 4 of the Child Nutrition Act of 1966 establishes National Average Payment Factors for free, reduced price and paid breakfasts served under the School Breakfast Program and additional payments for schools determined to be in ''severe need'' because they serve a high percentage of needy children.

Revised Payments

The following specific section 4 and section 11 National Average Payment Factors and maximum reimbursement rates are in effect through June 30, 1996. Due to a higher cost of living, the average payments and maximum reimbursements for Alaska and Hawaii are higher than those for all other States. The District of Columbia, Virgin Islands, Puerto Rico, Guam, American Samoa, the Commonwealth of the Northern Marianas, the Federated States of Micronesia, the Republic of the Marshalls, and the Republic of Palau use the figures specified for the contiguous States.

National School Lunch Program Payments

Section 4 National Average Payment Factors

In school food authorities which served *less than 60 percent* free and reduced price lunches in School Year 1993–94, the payments are: *Contiguous States*—17.25 cents, maximum rate 25.25 cents; *Alaska*—28.00 cents, maximum rate 39.75 cents; *Hawaii*—20.25 cents, maximum rate 29.25 cents.

In school food authorities which served *60 percent or more* free and reduced price lunches in School Year 1993–94, payments are: *Contiguous States*—19.25 cents, maximum rate 25.25 cents; *Alaska*—30.00 cents, maximum rate 39.75 cents; *Hawaii* 22.25 cents, maximum rate 29.25 cents.

Section 11 National Average Payment Factors

Contiguous States—free lunch—162.25 cents, reduced price lunch 122.25 cents; *Akaska*—free lunch 263.00 cents, reduced price lunch 223.00 cents; *Hawaii*—free lunch 190.00 cents, reduced price lunch 150.00 cents.

Meal Supplements in Afterschool Care Programs

The payments are: *Contiguous States*—free supplement—49.25 cents, reduced price supplement—24.75 cents, paid supplement—4.50 cents; *Alaska*—free supplement—80.00 cents, reduced price supplement—40.00 cents, paid supplement—7.25 cents; Hawaii—free supplement—57.75 cents, reduced price supplement—28.75 cents, paid supplement—5.25 cents.

School Breakfast Program Payments

For schools ''not in severe need'' the payments are:

Contiguous States—free breakfast 99.75 cents, reduced price breakfast 69.45 cents, paid breakfast 19.50 cents; *Alaska*—free breakfast 157.75 cents, reduced price breakfast 127.75 cents, paid breakfast 28.00 cents; *Hawaii*—free breakfast 115.75 cents, reduced price breakfast 85.75 cents, paid breakfast 21.75 cents.

For schools in ''severe need'' the payments are:

Contiguous States—free breakfast 118.50 cents, reduced price breakfast 88.50 cents, paid breakfast 19.50 cents; *Alaska*—free breakfast 188.25 cents, reduced price breakfast 158.25 cents, paid breakfast 28.00 cents; *Hawaii*—free breakfast 137.75 cents, reduced paid breakfast 107.75 cents, paid breakfast 21.75 cents.

Payment Chart

The following chart illustrates: The lunch National Average Payment Factors with the sections 4 and 11 already combined to indicate the per meal amount; the maximum lunch reimbursement rates; the reimbursement rates for meal supplements served in afterschool care programs; the breakfast National Average Payment Factors including ''severe need'' schools; and the milk reimbursement rate. All amounts are expressed in dollars or fractions thereof. The payment factors and reimbursement rates used for the District of Columbia, Virgin Islands, Puerto Rico and the Pacific Territories

are those specified for the contiguous States.

SCHOOL PROGRAMS—MEALS AND MILK PAYMENTS TO STATES AND SCHOOL FOOD AUTHORITIES

[Expressed in dollars or fractions thereof—effective from July 1, 1995–June 30, 1996]

National School Lunch Program [1]	Less than 60 percent	60 percent or more	Maximum rate
Contiguous States:			
Paid	$0.1725	$0.1925	$0.2525
Reduced price	1.3950	1.4150	1.5650
Free	1.7950	1.8150	1.9650
Alaska:			
Paid	.28	.30	.3975
Reduced price	2.51	2.53	2.77
Free	2.91	2.93	3.17
Hawaii:			
Paid	.2025	.2225	.2925
Reduced price	1.7025	1.7225	1.8950
Free	2.1025	2.1225	2.2950
School Breakfast Program	**Non-Severe Need**		**Severe Need**
Contiguous States:			
Paid	$0.1950		$0.1950
Reduced price	.6975		.8850
Free	.9975		1.1850
Alaska:			
Paid	.28		.28
Reduced price	1.2775		1.5825
Free	1.5775		1.8825
Hawaii:			
Paid	.2175		.2175
Reduced price	.8575		1.0775
Free	1.1575		1.3775
Special Milk Program	**All milk**	**Paid milk**	**Free milk**
Pricing Programs without Free Option	$.1125	N/A	N/A
Pricing Programs with Free Option	N/A	$.1125	(2)
Nonpricing programs	.1125	N/A	N/A
Supplements Served in Afterschool Care Programs			
Contiguous States:			
Paid		$.0450	
Reduced price		.2475	
Free		.4925	
Alaska:			
Paid		.0725	
Reduced price		.4000	
Free		.8000	
Hawaii:			
Paid		.0525	
Reduced price		.2875	
Free		.5775	

[1] Payments listed for Free and Reduced Price Lunches include both sections 4 and 11 funds.
[2] Average cost ½ pint milk.

Authority: Sec. 4, 8, 11 and 17A of the National School Lunch Act, as amended, (42 U.S.C. 1753, 1757, 1759a, 1766a) and sections 3 and 4(b) of the Child Nutrition Act, as amended (42 U.S.C. 1772 and 42 U.S.C. 1773(b)).

Dated: June 27, 1995.

William E. Ludwig,

Administrator.

[FR Doc. 95–16272 Filed 6–30–95; 8:45 am]

BILLING CODE 3410–30–P

Forest Service

Snowcreek Golf Course Expansion

AGENCY: Forest Service, USDA.

ACTION: Notice of intent to prepare an environmental impact statement.

SUMMARY: The Forest Service, Department of Agriculture, will prepare a environmental impact statement (EIS) for the proposed expansion of the Snowcreek Golf Course on National Forest System lands. The proposed expansion is located adjacent to the Town of Mammoth Lakes, within the boundary of the Inyo National Forest, Mono County, California. The EIS will evaluate at least four alternatives, the expansion as proposed, land exchange between the Forest Service and the proponent, expansion of the golf course on private lands, and denial of the Special-Use Application (the No Action alternative). In addition, the agency

gives notice of the environmental analysis and decision making process that will occur on the proposal so that interested and affected people are aware of how they may participate and contribute to the final decision.

DATES: Comments concerning the scope of the analysis must be received by July 31, 1995.

ADDRESSES: Submit written comments and suggestions concerning the proposed Snowcreek Golf Course Expansion to Dennis Martin, Forest Supervisor, Inyo National Forest, 873 North Main Street, Bishop, California 93514, ATTN: Snowcreek.

FOR FURTHER INFORMATION CONTACT: Direct questions about this environmental impact statement to Bob Hawkins, Winter Sports Specialist, Inyo National Forest, 873 North Main Street, Bishop, California 93514 or telephone (619) 873–2400.

SUPPLEMENTARY INFORMATION: An application for the expansion of the Snowcreek Golf Course was first submitted by Dempsey Construction Corporation in 1990. An Environmental Assessment and Decision Notice/Finding of No Significant Impact approving the proposal were issued by the Forest Supervisor on February 1, 1991. That decision was appealed pursuant to regulations at 36 CFR part 217. During the appeals process it became apparent that the Forest Supervisor did not have the authority to approve construction of a golf course, as that authority is reserved by the Chief of the Forest Service. The original decision was withdrawn by the Forest Supervisor on November 3, 1992. The application was forwarded to the Chief for review. The Chief denied the application based on policy on August 24, 1994.

Dempsey Construction Corporation re-applied for the use on December 13, 1994. The new application contained additional information regarding how the proposed use conformed with Forest Service Policy. Based on this new information, the application was accepted for review by the Chief on May 25, 1995. Acceptance of the application acknowledges that the expansion of the golf course on National Forest System lands is consistent with agency policy as well as statutory mission. The Chief also delegated the authority to make a final decision on the proposal to the Inyo National Forest Supervisor.

The proposal to expand the existing golf course includes adding an additional 9 holes, as well as the infrastructure needed to support the activity, such as irrigation systems, decorative water storage ponds, driving range, parking lot, clubhouse/pro-shop building, and storage/maintenance facilities. The golf course will be open to the public for a four month, 120-day season from June 10 to October 10. The expected use is estimated at 25,000 rounds of golf. Irrigation for this project will be with a combination of reclaimed wastewater and pumped ground water from private property. Estimated irrigation water demand is 390,000 gallons per day during the peak growing season. Turf management will be guided by the objectives of Integrated Plant Management, which is defined as the use of pest and environmental information and pest control methods to help prevent unacceptable levels of pest damage. The tools of pest management include cultural, mechanical, physical, biological, and chemical methods of pest control.

Public participation will be especially important at several points during the analysis. The first point is the scoping process (40 CFR 1501.7). The Forest Service has and is seeking information, comments, assistance from Federal, State, and local agencies and other individuals or organizations who may be interested in or affected by the proposed action. This input will be used in preparation of the draft EIS. The scoping process includes:

1. Identifying potential issues.
2. Identifying issues to be analyzed in depth.
3. Eliminating insignificant issues or those which have been covered by a relevant previous environmental analysis.
4. Exploring additional alternatives.
5. Identifying potential environmental effects of the proposed action and alternatives (i.e., direct, indirect, and cumulative effects and connected actions).
6. Determining potential cooperating agencies and task assignments.

Mailings to individuals and agencies that participated in the previous planning efforts will provide them with information about the proposed project. Public meetings, if held, will be announced locally. Federal, State, and local agencies, user groups, and other organizations who would be interested in the study will be invited to participate in scoping the issues that should be considered.

The draft EIS is scheduled to be completed by August 1995. The comment period on this draft environmental impact statement will be 45 days from the date the Environmental Protection Agency's notice of availability appears in the **Federal Register.** It is very important that those interested in the proposal participate at that time.

The Forest Service believes, at this early stage, it is important to give reviewers notice of several court rulings related to public participation in the environmental review process. First, reviewers of draft environmental impact statements must structure their participation in the environmental review of the proposal so that it is meaningful and alerts an agency to the reviewer's position and contentions. *Vermont Yankee Nuclear Power Corp.* v. *NRDC*, 435 U.S. 519, 533 (1978). Also, environmental objections that could be raised at the draft environmental impact statement stage but that are not raised until after completion of the final environmental impact statement may be waived or dismissed by the courts. *City of Angoon* v. *Hodel*, 803 F.2d 1016, 1022 (9th Cir. 1986) and *Wisconsin Heritages, Inc.* v. *Harris*, 490 F. Supp. 1334, 1338 (E.D. Wis. 1980). Because of these court rulings, it is very important that those interested in this proposed action participate by the close of the 45-day comment period so that substantive comments and objections are made available to the Forest Service at a time when it can meaningfully consider them and respond to them in the final environmental impact statement.

To assist the Forest Service in identifying and considering issues and concerns on the proposed action, comments on the draft EIS should be as specific as possible. It is also helpful if comments refer to specific pages or chapters of the draft statement. Comments may also address the adequacy of the draft EIS or the merits of the alternatives formulated and discussed in the statement. Reviewers may wish to refer to the Council on Environmental Quality Regulations for implementing the procedural provisions of the National Environmental Policy Act at 40 CFR 1503.3 in addressing these points.

After the comment period ends on the draft EIS, the comments will be analyzed and considered by the Forest Service in preparing the final environmental impact statement. The final EIS is expected to be completed by December 1995. The final EIS is expected to be completed by December 1995. The Forest Service is required to respond in the final EIS to the comments received (40 CFR 1503.4). The responsible official will consider the comments, responses, and environmental consequences discussed in the final EIS and applicable laws, regulations, and policies in making his decision on the proposal.

The decision will either be approval of the proposal as submitted, approval of the proposal as modified, or denial of

the proposal (No Action). If the proposal is approved, a special use permit would be issued for the construction and operation of a golf course. The responsible official will document the decision and rationale in the Record of Decision. The decision will be subject to appeal under 36 CFR 215 or regulations applicable at the time of the decision. Dennis Martin, Forest Supervisor, Inyo National Forest, 873 N. Main, Bishop, California 93514 is the responsible official for review of the proposal.

Dated: June 26, 1995.

Dan Totheroh,

Acting Forest Supervisor.

[FR Doc. 95–16263 Filed 6–30–95; 8:45 am]

BILLING CODE 3410–11–M

DEPARTMENT OF COMMERCE

Economic Development Administration

Notice of Petitions by Producing Firms for Determination of Eligibility to Apply for Trade Adjustment Assistance

AGENCY: Economic Development Administration (EDA), Department of Commerce.

ACTION: To give firms an opportunity to comment.

Petitions have been accepted for filing on the dates indicated from the firms listed below.

LIST OF PETITION ACTION BY TRADE ADJUSTMENT ASSISTANCE FOR PERIOD 05/16/95–06/16/95

Firm name	Address	Date petition accepted	product
QUALI-CAST FOUNDRY, INC	102 SEARS ROAD, CHEHALIS, WA 98532.	06/01/95	PUMP AND VALVE HOUSINGS.
THE GLASS EYE STUDIO CO	600 NORTHWEST 40TH STREET, SEATTLE, WA 98107.	06/01/95	DECORATIVE GLASS.
EPRO, INC	156 EAST BROADWAY, WESTERVILLE, OH 43081.	06/01/95	HAND MADE CUSTOM CERAMIC TITLE.
WORLD CLOCK COMPANY	2211 LAPEER ROAD, FLINT, MI 48503–4222.	06/01/95	DECORATIVE WALL CLOCKS.
VIRGINIA APPAREL CORPORATION	721 NORTH MAIN STREET, ROCKY MOUNT, VA 24151.	06/07/95	MEN'S AND LADIES PANTS AND SHORTS MADE OF COTTON AND COTTON BLEND MATERIALS.
I.T.B. INC., DBA COYOTE SPORTS, INC	136 HAKL STREET, TABOR, SD 57063	06/08/95	GOLF BAGS.
J.W. BRAY COMPANY, INC	305 EAST HOWTHORNE ST, BOX 189, DALTON, GA 30720.	06/12/95	HOUSE SLIPPERS OF FABRIC.
HAMILTON DIGITAL CONTROLS, INC	2118 BEACHGROVE PLACE, UTICA, NY 13501–1798.	06/13/95	MAGNETIC TAPE RECORDING HEADS.
F.H.M. CLOTHING MANUFACTURING CO., INC.	35 EAST ELIZABETH AVENUE, LINDEN, NJ 07036.	06/15/95	MEN'S AND BOY'S JACKETS, TROUSERS, AND SUITS.
UNIFLAIR, INC	1501 GUILFORD AVENUE, BALTIMORE, MD 21202.	06/15/95	WOMEN'S AND MEN'S TOP, BOTTOM, DRESSES, AND LAB COATS.
GENERAL MACHINE WORKS, INC	515 PROSPECT STREET, PO BOX 546, YORK, PA 17405.	06/15/95	MACHINED PARTS FROM BAR STOCK, SHEET METAL AND PLASTIC.
TRIMBLEHOUSE CORPORATION	4658 S. OLD PEACHTREE ROAD, NORCROSS, GA 30071.	06/15/95	ELECTRICAL LIGHTING OF BRASS AND OTHER METALS.
MARWIN CONTROLS, INC	11567 GOLDCOAST DRIVE, CINCINNATI, OH 45249.	06/15/95	ACTUATORS AND 3-PIECE BALL VALVES.
TIMBER LAKE CHEESE COMPANY, INC	P.O. BOX A, TIMBER LAKE, SD 57656 .	06/16/95	COLBY CHEESE.

The petitions were submitted pursuant to Section 251 of the Trade Act of 1974 (19 U.S.C. 2341). Consequently, the United States Department of Commerce has initiated separate investigations to determine whether increased imports into the United States of articles like or directly competitive with those produced by each firm contributed importantly to total or partial separation of the firm's workers, or threat thereof, and to a decrease in sales or production of each petitioning firm.

Any party having a substantial interest in the proceedings may request a public hearing on the matter. A request for a hearing must be received by the Trade Adjustment Assistance Division, Room 7023, Economic Development Administration, U.S. Department of Commerce, Washington, D.C. 20230, no later than the close of business of the tenth calendar day following the publication of this notice.

The Catalog of Federal Domestic Assistance official program number and title of the program under which these petitions are submitted is 11.313, Trade Adjustment Assistance.

Dated: June 26, 1995.

Lewis R. Podolske,

Acting Director, Trade Adjustment Assistance Division.

[FR Doc. 95–16241 Filed 6–30–95; 8:45 am]

BILLING CODE 3510–24–M

Bureau of Export Administration

[Docket No. 1107–01]

Decision and Order

In the Matter of: American Technology Trading Group, 44 Montgomery Street, Suite 500, San Francisco, California 94104, Respondent.

On August 27, 1991, the Office of Export Enforcement, Bureau of Export Administration, United States Department of Commerce (Department), issued a Charging Letter against American Technology Trading Group (ATTG) alleging that ATTG violated Sections 787.4(a), 787.5(a)(1)(ii), and 787.6 of the Export Administration Regulations (currently codified at 15 CFR Parts 768–799 (1995)) (the Regulations), issued pursuant to Section 13(c) of the Export Administration Act of 1979, as amended (50 U.S.C.A. app. §§ 2401–2420 (1991, Supp. 1993, and Pub. L. No. 103–277, July 5, 1994)) (the Act).[1] The Charging Letter alleged that:

(1) On 15 separate occasions between on or about August 27, 1986 through on or about July 29, 1987, ATTG exported U.S.-origin commodities contrary to the terms of a distribution license, in violation of Section 787.6 of the Regulations;

(2) In connection with the 15 exports described above, ATTG made false statements of material fact to a U.S. agency in connection with the preparation, submission, or use of an export control document, in violation of Section 787.5(a)(1)(ii) of the Regulations; and

(3) With respect to each of the 15 exports described above, ATTG made the exports with knowledge or reason to know that the exports were being made contrary to a prior representation ATTG made to the Department, in violation of Section 787.4(a) of the Regulations.

ATTG answered the Charging Letter, denying the allegations set forth therein. After the Answer was filed, the Department and ATTG entered into a Consent Agreement pursuant to Section 787.17(a) of the Regulations whereby they agreed to settle this matter in accordance with the terms and conditions set forth therein;

The Administrative Law Judge having recommended that I approve the terms of the Consent Agreement; and

After reading and approving those terms;

It is therefore ordered,

First, all outstanding individual validated licenses in which American Technology Trading Group appears or participates, in any manner or capacity, are hereby revoked and shall be returned forthwith to the Office of Exporter Services for cancellation. Further, all of ATTG's privileges of participating, in any manner or capacity, in any special licensing procedure, including, but not limited to, distribution licenses, are hereby revoked.

Second, American Technology Trading Group, 44 Montgomery Street, Suite 500, San Francisco, California 94104, and all its successors and assigns, and officers, representatives, agents, and employees, shall, for a period of ten years from the date of this Order, be denied all privileges of participating, directly or indirectly, in any manner or capacity, in any transaction in the United States or abroad involving any commodity or technical data exported or to be exported from the United States, and subject to the Regulations.

A. Without limiting the generality of the foregoing, participation, either in the United States or abroad, shall include participation, directly or indirectly, in any manner or capacity: (i) As a party or as a representative of a party to any export license application submitted to the Department; (ii) in preparing or filing with the Department any export license application or request for reexport authorization, or any document to be submitted therewith; (iii) in obtaining from the Department or using any validated or general export license, reexport authorization, or other export control document; (iv) in carrying on negotiations with respect to, or in receiving, ordering, buying, selling, delivering, storing, using, or disposing of, in whole or in part, any commodities or technical data exported or to be exported from the United States and subject to the Regulations; and (v) in financing, forwarding, transporting, or other servicing of such commodities or technical data.

B. After notice and opportunity for comment as provided in Section 788.3(c) of the Regulations, any person, firm, corporation, or business organization related to ATTG by affiliation, ownership, control, or position of responsibility in the conduct of trade or related services may also be subject to the provisions of this Order.

C. As provided by Section 787.12(a) of the Regulations, without prior disclosure of the facts to and specific authorization of the Office of Exporter Services, in consultation with the Office of Export Enforcement, no person may directly or indirectly, in any manner or capacity: (i) Apply for, obtain, or use any license, Shipper's Export Declaration, bill of lading, or other export control document relating to an export or reexport of commodities or technical data by, to, or for another person then subject to an order revoking or denying his export privileges or then excluded from practice before the Bureau of Export Administration; or (ii) order, buy, receive, use, sell, deliver, store, dispose of, forward, transport, finance, or otherwise service or participate: (a) In any transaction which may involve any commodity or technical data exported or to be exported from the United States; (b) in any reexport thereof; or (c) in any other transaction which is subject to the Export Administration Regulations, if the person denied export privileges may obtain any benefit or have any interest in, directly or indirectly, any of these transactions.

Third, that the Charging Letter, the Answer, the Consent Agreement, and this Order shall be made available to the public. A copy of this Order shall be served on the Department and ATTG and published in the **Federal Register**.

This Order, which constitutes the final agency action in this matter, is effective immediately.

Entered this 26th day of June, 1995.

William A. Reinsch,

Under Secretary for Export Administration.

[FR Doc. 95–16219 Filed 6–30–95; 8:45 am]

BILLING CODE 3510–DT–M

[1] The Act expired on August 20, 1994. Executive Order No. 12924 (59 FR 43437, August 23, 1994) continued the Regulations in effect under the International Emergency Economic Powers Act (50 U.S.C.A. §§ 1701–1706 (1991)).

[Docket No. 1107–04]

Decision and Order

In the Matter of: Mario Brero, Apartment 87, Route de Bougy 1170, Aubonne, Vaud, Switzerland, Respondent.

On August 27, 1991, the Office of Export Enforcement, Bureau of Export Administration, United States Department of Commerce (Department), issued a Charging Letter against Mario Brero (Brero) alleging that Brero violated Sections 787.2, 787.4(a), and 787.6 of the Export Administration Regulations (currently codified at 15 C.F.R. Parts 768–799 (1995)) (the Regulations), issued pursuant to Section 13(c) of the Export Administration Act of 1979, as amended (50 U.S.C.A. app. §§ 2401–2420 (1991, Supp. 1993, and Pub. L. No. 103–277, July 5, 1995)) (the Act).[1] The Charging Letter alleged that:

(1) On 15 separate occasions between on or about August 27, 1986 through on or about July 29, 1987, Brero disposed of U.S.-origin commodities contrary to the terms of a distribution license, in violation of Section 787.6 of the Regulations;

(2) With respect to each of the 15 exports described above, Brero transferred the U.S.-origin commodities

[1] The Act expired on August 20, 1994. Executive Order No. 12924 (59 F.R. 43437, August 23, 1994) continued the Regulations in effect under the International Emergency Economic Powers Act (50 U.S.C.A. §§ 1701–1706 (1991)).

to third parties with knowledge or reason to know that those transfers were being made contrary to a prior representation Brero made to the Department, in violation of Section 787.4(a) of the Regulations; and

(3) With respect to each of the 15 exports described above, Brero caused or induced another person to make false statements of material fact to a U.S. agency in connection with the preparation, submission, or use of an export control document, in violation of Section 787.2 of the Regulations.

Brero cooperated with the Department in its investigation into the matters alleged in the Charging Letter and answered the Charging Letter, denying the allegations set forth therein. After the Answer was filed, the Department and Brero entered into a Consent Agreement pursuant to Section 787.17(a) of the Regulations whereby they agreed to settle this matter in accordance with the terms and conditions set forth therein;

The Administrative Law Judge having recommended that I approve the terms of the Consent Agreement; and

After reading and approving those terms;

It is therefore ordered,

First, all outstanding individual validated licenses in which Mario Brero appears or participates, in any manner or capacity, are hereby revoked and shall be returned forthwith to the Office of Exporter Services for cancellation. further, all of Brero's privileges of participating, in any manner or capacity, in any special licensing procedure, including, but not limited to, distribution licenses, are hereby revoked.

Second, Mario Brero, Apartment 87, Route de Bougy 1170, Aubonne, Vaud, Switzerland, shall, for a period of ten years from the date of this Order, be denied all privileges of participating, directly or indirectly, in any manner or capacity, in any transaction in the United States or abroad involving any commodity or technical data exported or to be exported from the United States, and subject to the Regulations.

A. Without limiting the generality of the foregoing, participation, either in the United States or abroad, shall include participation, directly or indirectly, in any manner or capacity: (i) as a party or as a representative of a party to any export license application submitted to the Department; (ii) in preparing or filing with the Department any export license application or request for reexport authorization, or any document to be submitted therewith; (iii) in obtaining from the Department or using any validated or general export license, reexport authorization, or other export control document; (iv) in carrying on negotiations with respect to, or in receiving, ordering, buying, selling, delivering, storing, using, or disposing of, in whole or in part, any commodities or technical data exported or to be exported from the United States and subject to the Regulations; and (v) in financing, forwarding, transporting, or other servicing of such commodities or technical data.

B. After notice and opportunity for comment as provided in Section 788.3(c) of the Regulations, any person, firm, corporation, or business organization related to Brero by affiliation, ownership, control, or position of responsibility in the conduct of trade or related services may also be subject to the provisions of this Order.

C. As provided by Section 787.12(a) of the Regulations, without prior disclosure of the facts to and specific authorization of the Office of Exporter Services, in consultation with the Office of Export Enforcement, no person may directly or indirectly, in any manner or capacity: (i) apply for, obtain, or use any license, Shipper's Export Declaration, bill of lading, or other export control document relating to an export or reexport of commodities or technical data by, to, or for another person then subject to an order revoking or denying his export privileges or then excluded from practice before the Bureau of Export Administration; or (ii) order, buy, receive, use, sell, deliver, store, dispose of, forward, transport, finance, or otherwise service or participate: (a) in any transaction which may involve any commodity or technical data exported or to be exported from the United States; (b) in any reexport thereof; or (c) in any other transaction which is subject to the Export Administration Regulations, if the person denied export privileges may obtain any benefit or have any interest in, directly or indirectly, any of these transactions.

D. As authorized by Sections 788.16 and 788.17 of the Regulations, the denial period shall be suspended for a period of five years beginning five years from the date of entry of this Order, and shall thereafter be waived, provided that, during the period of suspension, Brero commits no violation of the Act or any regulation, order or license issued thereunder.

Third, That the Charging Letter, the Answer, the Consent Agreement, and this Order shall be made available to the public. A copy of this Order shall be served on the Department and Brero and published in the **Federal Register**

This Order, which constitutes the final agency action in this matter, is effective immediately.

Entered this 26 day of June, 1995.

William A. Reinsch,

Under Secretary for Export Administration.

[FR Doc. 95–16220 Filed 6–30–95; 8:45 am]

BILLING CODE 3510–DT–M

[Docket No. 2115–01–02]

Decision and Order

In the Matter of Elizabeth Drive Liquidation Corporation, formerly known as Imagraph Corporation, 11 Elizabeth Drive, Chelmsford, Massachusetts 01824, Respondent.

On November 13, 1992, the Office of Export Enforcement, Bureau of Export Administration, United States Department of Commerce (Department), issued a charging letter against Elizabeth Drive Liquidation Corporation, formerly doing business as Imagraph Corporation (Elizabeth Drive), alleging that Elizabeth Drive violated Sections 787.5(a) and 787.6 of the Export Administration Regulations (currently codified at 15 CFR Parts 768–799 (1995)) (the Regulations), issued pursuant to Section 13(c) of the Export Administration Act of 1979, as amended (50 U.S.C.A. app. §§ 2401–2420 (1991, Supp. 1993, and Pub. L. No. 103–277, July 5, 1994)) (the Act) [1] alleging that:

(1) During the period from approximately August 31, 1987 through on or about December 5, 1987, Elizabeth Drive exported U.S.-origin technical data by releasing the technical data in the United States to a person that was not a citizen or permanent resident of the United States, without the validated license required by Section 772.1(b) of the Regulations, in violation of Section 787.6 of the Regulations; and

(2) on five separate occasions between on or about April 28, 1989, and on or about June 8, 1989, Elizabeth Drive made false or misleading representations to the Department concerning the ultimate consignee on export license applications, in violation of Section 787.5(a) of the Regulations.

Elizabeth Drive filed an answer to the charging letter. After the answer was filed, the Department and Elizabeth Drive entered into a Consent Agreement pursuant to Section 787.17(a) of the Regulations whereby they agreed to settle this matter in accordance with the terms and conditions set forth therein.

---

[1] The Act expired on August 20, 1994. Executive Order No. 12924 (59 FR 43437, August 23, 1994) continued the Regulations in effect under the International Emergency Economic Powers Act (50 U.S.C.A. §§ 1701–1706 (1991)).

The Administrative Law Judge having recommended that I approve the terms of the Consent Agreement; and

After reading and approving those terms;

It is therefore ordered,

First, all outstanding individual validated licenses in which Elizabeth Drive Liquidation Corporation, 11 Elizabeth Drive, Chelmsford, Massachusetts 01824, appears or participates, in any manner or capacity, are hereby revoked and shall be returned forthwith to the Office of Exporter Services for cancellation. Further, all of Elizabeth Drive's privileges of participating, in any manner or capacity, in any special licensing procedure, including, but not limited to, distribution licenses, are hereby revoked.

Second, Elizabeth Drive Liquidation Corporation, 11 Elizabeth Drive, Chelmsford, Massachusetts 01824, and all its successors or assigns, and officers, representatives, agents, and employees when acting on behalf of Elizabeth Drive or any successors or assigns, shall, for a period of one year from the date of this Order, be denied all privileges of participating, directly or indirectly, in any manner or capacity, in any transaction in the United States or abroad involving any commodity or technical data exported or to be exported from the United States, and subject to the Regulations.

A. Without limiting the generality of the foregoing, participation, either in the United States or abroad, shall include participation, directly or indirectly, in any manner or capacity: (i) As a party or as a representative of a party to any export license application submitted to the Department; (ii) in preparing or filing with the Department any export license application or request for reexport authorization, or any document to be submitted therewith; (iii) in obtaining from the Department or using any validated or general export license, reexport authorization, or other export control document; (iv) in carrying on negotiations with respect to, or in receiving, ordering, buying, selling, delivering, storing, using, or disposing of, in whole or in part, any commodities or technical data exported or to be exported from the United States and subject to the Regulations; and (v) in financing, forwarding, transporting, or other servicing of such commodities or technical data.

B. After notice and opportunity for comment as provided in Section 788.3(c) of the Regulations, any person, firm, corporation, or business organization related to Elizabeth Drive by affiliation, ownership, control, or position of responsibility in the conduct of trade or related services may also be subject to the provisions of this Order.

C. As provided by Section 787.12(a) of the Regulations, without prior disclosure of the facts to and specific authorization of the Office of export Licensing, in consultation with the Office of Export Enforcement, no person may directly or indirectly, in any manner or capacity: (i) Apply for, obtain, or use any license, Shipper's Export Declaration, bill of lading, or other export control document relating to an export or reexport of commodities or technical data by, to, or for another person then subject to an order revoking or denying his export privileges or then excluded from practice before the Bureau of Export Administration; or (ii) order, buy, receive, use, sell, deliver, store, dispose of, forward, transport, finance, or otherwise service or participate: (a) in any transaction which may involve any commodity or technical data exported or to be exported from the United States; (b) in any reexport thereof; or (c) in any other transaction which is subject to the Export Administration Regulations, if the person denied export privileges may obtain any benefit or have any interest in, directly or indirectly, any of these transactions.

Third, that the Charging Letter, the Answer, the Consent Agreement and this Order shall be made available to the public. A copy of this Order shall be served on Elizabeth Drive and published in the **Federal Register**.

This Order, which constitutes the final agency action in this matter, is effective immediately.

Entered this 26th day of June, 1995.

William A. Reinsch,

Under Secretary for Export Administration.

[FR Doc. 95–16224 Filed 6–30–95; 8:45 am]

BILLING CODE 3510–DT–M

[Docket No. 1107–05]

Decision and Order

In the matter of: Julia Freedman Rue De Vieux-Marche 3, Byron, Switzerland, Respondent.

On August 27, 1991, the Office of Export Enforcement Bureau of Export Administration, United States Department of Commerce (Department), issued a Charging Letter against Julia Freedman (Freedman) alleging that Freedman violated Section 787.2 of the Export Administration Regulations (currently codified at 15 CFR Parts 768–799 (1995)) (the Regulations), issued pursuant to Section 13(c) of the Export Administration Act of 1979, as amended (50 U.S.C.A. app. §§ 2401–2420 (1991, Supp. 1993, and Pub. L. No. 103–277, July 5, 1994)) (the Act).[1] The Charging Letter alleged that:

(1) On 15 separate occasions between on or about August 27, 1986 through on or about July 29, 1987, Freedman caused or induced another person to make false statements of material fact to a U.S. agency in connection with the preparation submission, or use of an export control document, in violation of Section 787.2 of the Regulations.

Freedman cooperated with the Department in its investigation into the matters alleged in the Charging Letter and answered the Charging Letter, denying the allegations set forth therein. After the Answer was filed, the Department and Freedman entered into a Consent Agreement pursuant to Section 787.17(a) of the Regulations whereby they agreed to settle this matter in accordance with the terms and conditions set forth therein;

The Administrative Law Judge having recommended that I approve the terms of the Consent Agreement; and

After reading and approving those terms;

It is therefore ordered,

First, all outstanding individual validated licenses in which Julia Freedman appears or participates, in any manner or capacity, are hereby revoked and shall be returned forthwith to the Office of Exporter Services for cancellation. Further, all of Freedman's privileges of participating, in any manner or capacity, in any special licensing procedure, including, but not limited to, distribution licenses, are hereby revoked.

Second, Julia Freedman, Rue De Vieux-Marche 3, Byon, Switzerland, shall, for a period of ten years from the date of this Order, be denied all privileges of participating, directly or indirectly, in any manner or capacity, in any transaction in the United States or abroad involving any commodity or technical data exported or to be exported from the United States, and subject to the Regulations.

A. Without limiting the generality of the foregoing, participation, either in the United States or abroad, shall include participation, directly or indirectly, in any manner or capacity: (i) As a party or as a representative of a party to any export license application submitted to the Department; (ii) in preparing or filing with the Department any export license application or request for

[1] The Act expired on August 20, 1994. Executive Order No. 12924 (59 FR 43437, August 23, 1994) continued the Regulations in effect under the International Emergency Economic Powers Act (50 U.S.C.A. §§ 1701–1706 (1991)).

reexport authorization, or any document to be submitted therewith; (iii) in obtaining from the Department of using any validated or general export license reexport authorization, or other export control document; (iv) in carrying on negotiations with respect to, or in receiving, ordering, buying, selling, delivering, storing, using, or disposing of, in whole or in part, any commodities or technical data exported or to be exported from the United States and subject to the Regulations; and (v) in financing, forwarding, transporting, or other servicing of such commodities or technical data.

B. After notice and opportunity for comment as provided in Section 788.3(c) of the Regulations, any person, firm, corporation, or business organization related to Freedman by affiliation, ownership, control, or position of responsibility in the conduct of trade or related services may also be subject to the provisions of this Order.

C. As provided by Section 787.12(a) of the Regulations, without prior disclosure of the facts to and specific authorization of the Office of Exporter Services, in consultation with the Office of Export Enforcement, no person may directly or indirectly, in any manner or capacity: (1) Apply for, obtain or use any license, Shipper's Export Declaration, bill or lading, or other export control document relating to any export or reexport of commodities or technical date by, to, or for another person then subject to an order revoking or denying his export privileges or then excluded from practice before the Bureau of Export Administration; or (ii) order, buy, receive, use, sell, deliver, store, dispose of, forward, transport, finance, or otherwise service or participate: (a) in any transaction which may involve any commodity or technical data exported or to be exported from the United States; (b) in any reexport thereof; or (c) in any other transaction which is subject to the Export Administration Regulations, if the person denied export privileges may obtain any benefit or have any interest in, directly or indirectly, any of these transactions.

D. As authorized by Sections 788.16 and 788.17 of the Regulations, the denial period shall be suspended for a period of seven years beginning three years from the data of entry of this Order, and shall thereafter be waived, provided that, during the period of suspension, Freedman commits no violation of the Act or any regulation, order or license issued thereunder.

Third, That the Charging Letter, the Answer, the Consent Agreement, and this Order shall be made available to the public. A copy of this Order shall be served on the Department and Freedman and published in the **Federal Register.**

This Order, which constitutes the final agency action in this matter, is effective immediately.

Entered this 26th day of June, 1995.

[FR Doc. 95–16221 Filed 6–30–95; 8:45 am]

BILLING CODE 3510–DT–M

[Docket No. 1107–03]

Decision and Order

In the Matter of: Samata S.A., Apartment 87, Route de Bougy 1170, Aubonne, Vaud, Switzerland, Respondent.

On August 27, 1991, the Office of Export Enforcement, Bureau of Export Administration, United States Department of Commerce (Department), issued a Charging Letter against Samata S.A. (Samata) alleging that Samata violated Sections 787.2, 787.4(a), and 787.6 of the Export Administration Regulations (currently codified at 15 CFR Parts 768–799 (1995)) (the Regulations), issued pursuant to Section 13(c) of the Export Administration Act of 1979, as amended (50 U.S.C.A. app. §§ 2401–2420 (1991, Supp. 1993, and Pub. L. No. 103–277, July 5, 1994)) (the Act).[1] The Charging Letter alleged that:

(1) On 15 separate occasions between on or about August 27, 1986 through on or about July 29, 1987, Samata disposed of U.S.-origin commodities contrary to the terms of a distribution license, in violation of Section 787.6 of the Regulations;

(2) With respect to each of the 15 exports described above, Samata transferred the U.S.-origin commodities to third parties with knowledge or reason to know that those transfers were being made contrary to a prior representation Samata made to the Department, in violation of Section 787.4(a) of the Regulations; and

(3) With respect to each of the 15 exports described above, Samata caused or induced another person to make false statements of material fact to a U.S. agency in connection with the preparation, submission, or use of an export control document, in violation of Section 787.2 of the Regulations.

Samata cooperated with the Department in its investigation into the matters alleged in the Charging Letter and answered the Charging Letter, denying the allegations set forth therein. After the Answer was filed, the Department and Samata entered into a Consent Agreement pursuant to Section 787.17(a) of the Regulations whereby they agreed to settle this matter in accordance with the terms and conditions set forth therein;

The Administration Law Judge having recommended that I approved the terms of the Consent Agreement; and

After reading and approving those terms;

It is therefore ordered,

First, all outstanding individual validated licenses in which Samata S.A. appears or participates, in any manner or capacity, are hereby revoked and shall be returned forthwith to the Office of Exporter Services for cancellation. Further, all of Samata's privileges of participating, in any manner or capacity, in any special licensing procedure, including, but not limited to, distribution licenses, are hereby revoked.

Second, Samata S.A., Apartment 87, Route de Bougy 1170, Aubonne, Vaud, Switzerland, and all its successors and assigns, and officers, representatives, agents, and employees, shall, for a period of ten years from the date of this Order, be denied all privileges of participating, directly or indirectly, in any manner or capacity, in any transaction in the United States or abroad involving any commodity or technical data exported or to be exported from the United States, and subject to the Regulations.

A. Without limiting the generality of the foregoing, participation, either in the United States or abroad, shall include participation, directly or indirectly, in any manner or capacity: (i) As a party or as a representative of a party to any export license application submitted to the Department; (ii) in preparing or filing with the Department any export license application or request for reexport authorization, or any document to be submitted therewith; (iii) in obtaining from the Department or using any validated or general export license, reexport authorization, or other export control document; (iv) in carrying on negotiations with respect to, or in receiving, ordering, buying, selling, delivering, storing, using, or disposing of, in whole or in part, any commodities or technical data exported or to be exported from the United States and subject to the Regulations; and (v) in financing, forwarding, transporting, or other servicing of such commodities or technical data.

B. After notice and opportunity for comment as provided in Section 788.3(c) of the Regulations, any person,

---

[1] The Act expired on August 20, 1994. Executive Order No. 12924 (59 FR 43437, August 23, 1994) continued the Regulations in effect under the International Emergency Economic Powers Act (50 U.S.C.A. §§ 1701–1706 (1991)).

firm, corporation, or business organization related to Samata by affiliation, ownership, control, or position of responsibility in the conduct of trade or related services may also be subject to the provisions of this Order.

C. As provided by Section 787.12(a) of the Regulations, without prior disclosure of the facts to and specific authorization of the Office of Exporter Services, in consultation with the Office of Export Enforcement, no person may directly or indirectly, in any manner or capacity: (i) Apply for, obtain, or use any license, Shipper's Export Declaration, bill of lading, or other export control document relating to an export or reexport of commodities or technical data by, to, or for another person then subject to an order revoking or denying his export privileges or then excluded from practice before the Bureau of Export Administration; or (ii) order, buy, receive, use, sell, deliver, store, dispose of, forward, transport, finance, or otherwise service or participate: (a) in any transaction which may involve any commodity or technical data exported or to be exported from the United States; (b) in any reexport thereof; or (c) in any other transaction which is subject to the Export Administration Regulations, if the person denied export privileges may obtain any benefit or have any interest in, directly or indirectly, any of these transactions.

Third, that the Charging Letter, the Answer, the Consent Agreement, and this Order shall be made available to the public. A copy of this Order shall be served on the Department and Samata and published in the **Federal Register**.

This Order, which constitutes the final agency action in this matter, is effective immediately.

Entered this 26th day of June, 1995.

William A. Reinsch,

Under Secretary for Export Administration.

[FR Doc. 95–16222 Filed 6–30–95; 8:45 am]

BILLING CODE 3510–DT–M

[Docket No. 1107–02]

Decision and Order

In the Matter of: Robert J. Wheeler, 97 Templar Place, Oakland, California 94618, Respondent.

On August 27, 1991, the Office of Export Enforcement, Bureau of Export Administration, United States Department of Commerce (Department), issued a Charging Letter against Robert J. Wheeler (Wheeler) alleging that Wheeler violated Sections 787.4(a), 787.5(a)(1)(ii), and 787.6 of the Export Administration Regulations (currently codified at 15 CFR Parts 768–799 (1995)) (the Regulations), issued pursuant to Section 13(c) of the Export Administration Act of 1979, as amended (50 U.S.C.A. app. §§ 2401–2420 (1991, Supp. 1993, and Pub. L. No. 103–277, July 5, 1994)) (the Act).[1] The Charging Letter alleged that:

(1) On 15 separate occasions between on or about August 27, 1986 through on or about July 29, 1987, Wheeler exported U.S.-origin commodities contrary to the terms of distribution license, in violation of Section 787.6 of the Regulations;

(2) In connection with the 15 exports described above, Wheeler made false statements of material fact to a U.S. agency in connection with the preparation, submission, or use of an export control document, in violation of Section 787.5(a)(1)(ii) of the Regulations; and

(3) With respect to each of the 15 exports described above, Wheeler made the exports with knowledge or reason to know that the exports were being made contrary to a prior representation Wheeler made to the Department, in violation of Section 787.4(a) of the Regulations.

Wheeler answered the Charging Letter, denying the allegations set forth therein. After the Answer was filed, the Department and Wheeler entered into a Consent Agreement pursuant to Section 787.17(a) of the Regulations whereby they agreed to settle this matter in accordance with the terms and conditions set forth therein;

The Administration Law Judge having recommended that I approve the terms of the Consent Agreement; and

After reading and approving those terms;

It is therefore ordered,

First, all outstanding individual validated licenses in which Robert J. Wheeler appears or participates, in any manner or capacity, are hereby revoked and shall be returned forthwith to the Office of Exporter Services for cancellation. Further, all of Wheeler's privileges of participating, in any manner or capacity, in any special licensing procedure, including, but not limited to, distribution licenses, are hereby revoked.

Second, Robert J. Wheeler, 97 Templar Place, Oakland, California 94618, shall, for a period of ten years from the date of this Order, be denied all privileges of participating, directly or indirectly, in any manner or capacity, in any transaction in the United States or abroad involving any commodity or technical data exported or to be exported from the United States, and subject to the Regulations.

A. Without limiting the generality of the foregoing, participation, either in the United States or abroad, shall include participation, directly or directly, in any manner or capacity: (i) As a party or as a representative of a party to any export license application submitted to the Department; (ii) in preparing or filing with the Department any export license application or request for reexport authorization, or any document to be submitted therewith; (iii) in obtaining from the Department or using any validated or general export license, reexport authorization, or other export control document; (iv) in carrying on negotiations with respect to, or in receiving, ordering, buying, selling, delivering, storing, using, or disposing of, in whole or in part, any commodities or technical data exported or to be exported from the United States and subject to the Regulations; and (v) in financing, forwarding, transporting, or other servicing of such commodities or technical data.

B. After notice and opportunity for comment as provided in Section 788.3(c) of the Regulations, any person, firm, corporation, or business organization related to Wheeler by affiliation, ownership, control, or position of responsibility in the conduct of trade or related services may also be subject to the provisions of this Order.

C. As provided by Section 787.12(a) of the Regulations, without prior disclosure of the facts to and specific authorization of the Office of Exporter Services, in consultation with the Office of Export Enforcement, no person may directly or indirectly, in any manner or capacity: (i) Apply for, obtain, or use any license, Shipper's Export Declaration, bill of lading, or other export control document relating to an export or reexport of commodities or technical data by, to, or for another person then subject to an order revoking or denying his export privileges or then excluded from practice before the Bureau of Export Administration; or (ii) order, buy, receive, use, sell, deliver, store, dispose of, forward, transport, finance, or otherwise service or participate: (a) in any transaction which may involve any commodity or technical data exported or to be exported from the United States; (b) in any reexport thereof; or (c) in any other transaction which is subject to the Export Administration Regulations, if the person denied export privileges may obtain any benefit or have any interest

[1] The Act expired on August 20, 1994. Executive Order No. 12924 (59 FR 43437, August 23, 1994) continued the Regulations in effect under the International Emergency Economic Powers Act (50 U.S.C.A. 1701–1706 (1991)).

in, directly or indirectly, any of these transactions.

D. As authorized by Sections 788.16 and 788.17 of the Regulations, the denial period shall be suspended for a period of five years beginning five years from the date of entry of this Order, and shall thereafter be waived, provided that, during the period of suspension, Wheeler commits no violation of the Act or any regulation, order or license issued thereunder.

Third, that the Charging Letter, the Answer, the Consent Agreement, and this Order shall be made available to the public. A copy of this Order shall be served on the Department and Wheeler and published in the **Federal Register**.

This Order, which constitutes the final agency action in this matter, is effective immediately.

Entered this 26th day of June, 1995.

William A. Reinsch,

Under Secretary for Export Administration.

[FR Doc. 95–16223 Filed 6–30–95; 8:45 am]

BILLING CODE 3510–DT–M

Foreign-Trade Zones Board

[Docket 6–94]

Foreign-Trade Zone 114—Peoria, Illinois Withdrawal of Application for Subzone Status for Revere Ware Corporation Plant

Notice is hereby given of the withdrawal of the application submitted by the Economic Development Council for the Peoria Area, grantee of FTZ 114, requesting special-purpose subzone status for the stainless steel and aluminum household cookware manufacturing plant of the Revere Ware Corporation, Clinton, Illinois. The application was filed on February 15, 1994 (59 FR 10782, 3/8/94).

The withdrawal was requested by the applicant because of changed circumstances, and the case has been closed without prejudice.

Dated: June 26, 1995.

John J. Da Ponte, Jr.,

Executive Secretary.

[FR Doc. 95–16307 Filed 6–30–95; 8:45 am]

BILLING CODE 3510–DS–P

[Docket 33–95]

Foreign-Trade Zone 61—San Juan, Puerto Rico Application for Subzone Ohmeda Caribe Inc./Ohmeda Pharmaceutical Manufacturing Inc. (Pharmaceutical Products) Guayama, Puerto Rico

An application has been submitted to the Foreign-Trade Zones Board (the Board) by the Commercial and Farm Credit and Development Corporation of Puerto Rico, grantee of FTZ 61, requesting special-purpose subzone status for the pharmaceutical manufacturing plant (210 employees) of Ohmeda Caribe Inc./Ohmeda Pharmaceutical Manufacturing Inc. (Ohmeda), in Guayama, Puerto Rico (San Juan area). The application was submitted pursuant to the provisions of the Foreign-Trade Zones Act, as amended (19 U.S.C. 81a–81u), and the regulations of the Board (15 CFR part 400). It was formally filed on June 22, 1995.

Ohmeda is a wholly-owned subsidiary of BOC Group plc (U.K.), which comprises three global businesses—industrial and specialty gases, health care products, and vacuum technology and distribution services.

Ohmeda's Guayama plant (23 bldgs./176,000 sq. ft. on 38 acres) is located at Route 3, KM 142.5, Guayama, Puerto Rico, some 45 miles south of San Juan. The facility produces finished pharmaceutical products, primarily inhalation anesthetics for hospital and critical care therapy (e.g., FORANE®, SUPRANE®, and AERRANE®).

Currently, foreign-sourced materials account for, on average, 90 percent of materials value, and include the following specific items: trifluoroethanol, chlorodifluoromethane, and a plastic valve assembly used to administer the anesthetics. The company may also purchase from abroad other ingredients and materials in the following general categories: gums, starches, waxes, vegetable extracts, mineral oils, sugars, empty capsules, protein concentrates, prepared animal feed, mineral products, inorganic acids, chlorides, clorates, sulfites, sulfates, phosphates, cyanides, silicates, radioactive chemicals, rare-earth metal compounds, hydroxides, hydrazine and hydroxylamine, chlorides, phosphates, carbonates, hydrocarbons, alcohols, phenols, ethers, epoxides, acetals, aldehydes, ketone function compounds, mono- and polycarboxylic acids, phosphoric esters, amine-, carboxymide, nitrile- and oxygen-function compounds, heterocyclic compounds, sulfonamides, insecticides, rodenticides, fungicides and herbicides, fertilizers, vitamins, hormones, antibiotics, gelatins, enzymes, pharmaceutical glaze, essential oils, albumins, gelatins, activated carbon, residual lyes, acrylic polymers, color lakes, soaps and detergents, various packaging and printing materials, medicaments, pharmaceutical products, and instruments and appliances used in medical sciences. Some 10 percent of production is exported.

Zone procedures would exempt Ohmeda from Customs duty payments on foreign materials used in production for export. On domestic sales, the company would be able to choose the duty rates that apply to the finished products (duty-free). The duty rates on foreign-sourced items range from duty-free to 18.6 percent. At the outset, zone savings would primarily involve choosing the finished product duty rate on SUPRANE®, FORANE® and AERRANE® (duty-free), rather than the rates for their foreign components: trifluoroethanol (HTSUS #2905.50.1000, duty rate—5.5%), chlorodifluoromethane (HTSUS #2903.40.4010—3.7%), and a plastic valve assembly (HTSUS #8481.80.5090—4.1%). The application indicates that the savings from zone procedures will help improve the plant's international competitiveness.

In accordance with the Board's regulations, a member of the FTZ Staff has been designated examiner to investigate the application and report to the Board.

Public comment is invited from interested parties. Submissions (original and 3 copies) shall be addressed to the Board's Executive Secretary at the address below. The closing period for their receipt is September 1, 1995. Rebuttal comments in response to material submitted during the foregoing period may be submitted during the subsequent 15-day period (to September 18, 1995).

A copy of the application and accompanying exhibits will be available for public inspection at each of the following locations:

U.S. Department of Commerce District Office, Room G–55, Federal Building, Chardon Avenue, San Juan (Hato Rey), Puerto Rico 00918

Office of the Executive Secretary, Foreign-Trade Zones Board, U.S. Department of Commerce, Room 3716, 14th & Pennsylvania Avenue, NW., Washington, DC 20230.

Dated: June 26, 1995.

John J. Da Ponte, Jr.,

Executive Secretary.

[FR Doc. 95–16310 Filed 6–30–95; 8:45 am]

BILLING CODE 3510–DS-P

[Docket 34–95]

Foreign-Trade Zone 84, Houston, TX Proposed Foreign-Trade Subzone Crown Central Petroleum Corporation (Oil Refinery Complex) Harris County, Texas

An application has been submitted to the Foreign-Trade Zones Board (the Board) by the Port of Houston Authority, grantee of FTZ 84, requesting special-purpose subzone status for the oil refinery complex of Crown Central Petroleum Corporation (Crown), located in Harris County, Texas. The application was submitted pursuant to the provisions of the Foreign-Trade Zones Act, as amended (19 U.S.C. 81a-81u), and the regulations of the Board (15 CFR part 400). It was formally filed on June 23, 1995.

The refinery complex (341 acres) consists of 2 sites in Harris County, Texas: *Site 1* (200 acres)—main refinery and petrochemical feedstock complex located on the Houston Ship Channel, at 111 Red Bluff Road, Houston; and *Site 2* (141 acres)—Crown Tank Farm and Terminal, located at 1200 Red Bluff Road, Pasadena.

The refinery (100,000 barrels per day; 380 employees) is used to produce fuels and petrochemical feedstocks. Fuels produced include gasoline, jet fuel, kerosene, gas oil, diesel fuel, residual fuels, and naphthas. Petrochemicals include methane, ethane, butane, propane, and propylene. Refinery by-products include sulfur and petroleum coke. Almost 80 percent of the crude oil (80 percent of inputs) and some feedstocks and motor fuel blendstocks are sourced abroad.

Zone procedures would exempt the refinery from Customs duty payments on the foreign products used in its exports. On domestic sales, the company would be able to choose the finished product duty rate (nonprivileged foreign status—NPF) on certain petrochemical feedstocks and refinery by-products (duty-free). The duty on crude oil ranges from 5.25¢ to 10.5¢/barrel. Foreign merchandise would also be exempt from state and local *ad valorem* taxes. The application indicates that the savings from zone procedures would help improve the refinery's international competitiveness.

In accordance with the Board's regulations, a member of the FTZ Staff has been designated examiner to investigate the application and report to the Board.

Public comment is invited from interested parties. Submissions (original and 3 copies) shall be addressed to the Board's Executive Secretary at the address below. The closing period for their receipt is September 1, 1995. Rebuttal comments in response to material submitted during the foregoing period may be submitted during the subsequent 15-day period to September 18, 1995.

A copy of the application and accompanying exhibits will be available for public inspection at each of the following locations:

U.S. Department of Commerce District Office, #1 Allen Center, Suite 1160, 500 Dallas, Houston, Texas 77002

Office of the Executive Secretary, Foreign-Trade Zones Board, Room 3716, U.S. Department of Commerce, 14th & Pennsylvania Avenue, NW, Washington, DC 20230.

Dated: June 26, 1995.

John J. Da Ponte, Jr.,

Executive Secretary.

[FR Doc. 95–16309 Filed 6–30–95; 8:45 am]

BILLING CODE 3510–DS–P

DEPARTMENT OF COMMERCE

Foreign-Trade Zones Board

[Docket A(32b1)–10–95]

Foreign-Trade Zone 122—Corpus Christi, TX Subzone 122C Neste Trifinery Petroleum Services (Crude Oil Refinery); Request for Modification of Restriction

A request has been submitted to the Foreign-Trade Zones Board (the Board) by the Port of Corpus Christi Authority, grantee of FTZ 122, pursuant to § 400.32(b)(1) of the Board's regulations, for modification of the restrictions in FTZ Board Order 310 authorizing Subzone 122C at the crude oil refinery of Neste Trifinery Petroleum Services (Neste) in Corpus Christi, Texas. The request was formally filed on June 26, 1995.

The Board Order in question was issued subject to certain standard restrictions, including one that required the election of privileged foreign status on incoming foreign merchandise. The zone grantee has requested that the latter restriction be modified so that Neste would have the option available under the FTZ Act to choose non-privileged foreign (NPF) status on foreign refinery inputs used to produce certain petrochemical feedstocks and by-products (primarily asphalt at this time).

The request cites the FTZ Board's recent decision in the Amoco, Texas City, Texas case (Board Order 731, 60 FR 13118, 3/10/95) which authorized subzone status with the NPF option noted above. In the Amoco case, the Board concluded that the restriction that precluded this NPF option was not needed under current oil refinery industry circumstances.

Public comment on the proposal is invited from interested parties. Submissions (original and 3 copies) shall be addressed to the Board's Executive Secretary at the address below. The closing period for their receipt is August 2, 1995.

A copy of the application and accompanying exhibits will be available for public inspection at the following location: Office of the Executive Secretary, Foreign-Trade Zones Board, U.S. Department of Commerce, Room 3716, 14th & Pennsylvania Avenue, NW., Washington, DC 20230.

Dated: June 26, 1995.

John J. Da Ponte, Jr.,

Executive Secretary.

[FR Doc. 95–16308 Filed 6–30–95; 8:45 am]

BILLING CODE 3510–DS–P

International Trade Administration

Antidumping or Countervailing Duty Order, Finding, or Suspended Investigation; Opportunity to Request Administrative Review

AGENCY: Import Administration, International Trade Administration, Commerce.

ACTION: Notice of Opportunity to Request Administrative Review of Antidumping or Countervailing Duty Order, Finding, or Suspended Investigation.

BACKGROUND: Each year during the anniversary month of the publication of an antidumping or countervailing duty order, finding, or suspension of investigation, an interested party, as defined in section 771(9) of the Tariff Act of 1930, as amended, may request, in accordance with section 353.22 or 355.22 of the Department of Commerce (the Department) Regulations (19 CFR 353.22/355.22 (1993)), that the Department conduct an administrative review of that antidumping or countervailing duty order, finding, or suspended investigation.

OPPORTUNITY TO REQUEST A REVIEW: Not later than July 31, 1995, interested parties may request administrative review of the following orders, findings, or suspended investigations, with anniversary dates in July for the following periods:

Antidumping duty proceedings	Period
Armenia: Solid Urea (A–831–801)	07/01/94–06/30/95
Azerbaijan: Solid Urea (A–831–801)	07/01/94–06/30/95
Belarus-Baltic: Solid Urea (A–822–801)	07/01/94–06/30/95
Brazil: Industrial Nitrocellulose (A–351–804)	07/01/94–06/30/95
Brazil: Silicon Metal (A–351–806)	07/01/94–06/30/95
Estonia-Baltic: Solid Urea (A–447–801)	07/01/94–06/30/95
Georgia: Solid Urea (A–833–801)	07/01/94–06/30/95
Germany: Industrial Nitrocellulose (A–428–803)	07/01/94–06/30/95
Germany: Solid Urea (A–428–605)	07/01/94–06/30/95
Iran: Certain In-Shell Pistachios (A–507–502)	07/01/94–06/30/95
Japan: Professional Electric Cutting Tools (A–588–823)	07/01/94–06/30/95
Japan: Industrial Nitrocellulose (A–588–812)	07/01/94–06/30/95
Japan: Malleable Cast-Iron Pipe Fittings (A–588–605)	07/01/94–06/30/95
Japan: Synthetic Methionine (A–588–041)	07/01/94–06/30/95
Kazakhstan: Solid Urea (A–834–801)	07/01/94–06/30/95
Korea: Industrial Nitrocellulose (A–580–805)	07/01/94–06/30/95
Kyrgyzstan: Solid Urea (A–835–801)	07/01/94–06/30/95
Latvia-Baltic: Solid Urea (A–449–801)	07/01/94–06/30/95
Lithuania: Solid Urea (A–451–801)	07/01/94–06/30/95
Moldova: Solid Urea (A–841–801)	07/01/94–06/30/95
Romania: Solid Urea (A–485–601)	07/01/94–06/30/95
Russia: Solid Urea (A–821–801)	07/01/94–06/30/95
Tajikistan: Solid Urea (A–842–801)	07/01/94–06/30/95
Thailand: Carbon Steel Butt-Weld Pipe Fittings (A–549–807)	07/01/94–06/30/95
The People's Republic of China: Carbon Steel Butt-Weld Pipe Fittings (A–570–814)	07/01/94–06/30/95
The People's Republic of China: Industrial Nitrocellulose (A–570–802)	07/01/94–06/30/95
The People's Republic of China: Sebacic Acid (A–570–825)	07/01/94–06/30/95
Turkmenistan: Solid Urea (A–843–801)	07/01/94–06/30/95
United Kingdom: Industrial Nitrocellulose (A–412–803)	07/01/94–06/30/95
Ukraine: Solid Urea (A–823–801)	07/01/94–06/30/95
Uzbekistan: Solid Urea (A–844–801)	07/01/94–06/30/95
Suspension Agreements	
Brazil: Certain Forged Steel Crankshafts (C–351–609	01/01/94–12/31/94
Countervailing Duty Proceedings	
European Economic Community: Sugar (C–408–046)	01/01/94–12/31/94

In accordance with sections 353.22(a) and 355.22(a) of the regulations, an interested party as defined by section 353.2(k) may request in writing that the Secretary conduct an administrative review. The Department has changed its requirements for requesting reviews for countervailing duty orders. Pursuant to 19 CFR 355.22(a) of the Department's Interim Regulations (60 FR 25137 (May 11, 1995)), an interested party must specify the individual producers or exporters covered by the order for which they are requesting a review. Therefore, for both antidumping and countervailing duty reviews, the interested party must specify for which individual producers or exporters covered by an antidumping finding or an antidumping or countervailing duty order it is requesting a review, and the requesting party must state why it desires the Secretary to review those particular producers or exporters. If the interested party intends for the Secretary to review sales of merchandise by an exporter (or a producer if that producer also exports merchandise from other suppliers) which were produced in more than one country of origin, and each country of origin is subject to a separate order, then the interested party must state specifically, on an order-by-order basis, which exporter(s) the request is intended to cover.

Seven copies of the request should be submitted to the Assistant Secretary for Import Administration, International Trade Administration, Room B–099, U.S. Department of Commerce, Washington, DC 20230. The Department also asks parties to serve a copy of their requests to the Office of Antidumping Compliance, Attention: Pamela Woods, in room 3065 of the main Commerce Building. Further, in accordance with § 353.31(g) or § 355.31(g) of the regulations, a copy of each request must be served on every party on the Department's service list.

The Department will publish in the **Federal Register** a notice of ''Initiation of Antidumping (Countervailing) Duty Administrative Review,'' for requests received by July 31, 1995. If the Department does not receive, by July 31, 1995, a request for review of entries covered by an order or finding listed in this notice and for the period identified above, the Department will instruct the Customs Service to assess antidumping or countervailing duties on those entries at a rate equal to the cash deposit of (or bond for) estimated antidumping or countervailing duties required on those entries at the time of entry, or withdrawal from warehouse, for consumption and to continue to collect the cash deposit previously ordered.

This notice is not required by statute, but is published as a service to the international trading community.

Dated: June 26, 1995.

Joseph A. Spetrini,

Deputy Assistant Secretary for Compliance.

[FR Doc. 95–16303 Filed 6–30–95; 8:45 am]

BILLING CODE 3510–DS–M

Intent To Revoke Antidumping Duty Orders and Findings and To Terminate Suspended Investigations

AGENCY: Import Administration, International Trade Administration, Department of Commerce.

ACTION: Notice of Intent To Revoke Antidumping Duty Orders and Findings and To Terminate Suspended Investigations.

SUMMARY: The Department of Commerce (the Department) is notifying the public

of its intent to revoke the antidumping duty orders and findings and to terminate the suspended investigations listed below. Domestic interested parties who object to these revocations and terminations must submit their comments in writing no later than the last day of July 1995.

EFFECTIVE DATE: July 3, 1995.

FOR FURTHER INFORMATION CONTACT: Michael Panfeld or the analyst listed under Antidumping Proceeding at: Office of Antidumping Compliance, Import Administration, International Trade Administration, U.S. Department of Commerce, 14th Street & Constitution Avenue, NW., Washington, DC 20230, telephone (202) 482–4737.

SUPPLEMENTARY INFORMATION:

Background

The Department may revoke an antidumping duty order or finding or terminate a suspended investigation if the Secretary of Commerce concludes that it is no longer of interest to interested parties. Accordingly, as required by § 353.25(d)(4) of the Department's regulations, we are notifying the public of our intent to revoke the following antidumping duty orders and findings and to terminate the suspended investigations for which the Department has not received a request to conduct an administrative review for the most recent four consecutive annual anniversary months:

Antidumping Proceeding

Armenia

Solid Urea
A–831–801
52 FR 26366
July 14, 1987
Contact: Thomas Barlow at (202) 482–5256

Azerbaijan

Solid Urea
A–832–801
52 FR 26366
July 14, 1987
Contact: Thomas Barlow at (202) 482–5256

Belarus

Solid Urea
A–822–801
52 FR 26366
July 14, 1987
Contact: Thomas Barlow at (202) 482–5256

Georgia

Solid Urea
A–833–801
52 FR 26366
July 14, 1987
Contact: Thomas Barlow at (202) 482–5256

Germany

Industrial Nitrocellulose
A–428–803
55 FR 28271
July 10, 1990
Contact: Todd Peterson at (202) 482–4195

Iran

In-Shell Pistachio Nuts
A–507–502
51 FR 25922
July 17, 1986
Contact: Valerie Turoscy at (202) 482–0145

Japan

Cast Iron Pipe Fittings
A–588–605
52 FR 25281
July 6, 1987
Contact: Sheila Forbes at (202) 482–5253

Japan

High Power Microwave Amplifiers and Components Thereof
A–588–005
47 FR 31413
July 20, 1982
Contact: Michael Heaney at (202) 482–4475

Japan

Industrial Nitrocellulose
A–588–812
55 FR 28268
July 10, 1990
Contact: Michael Heaney at (202) 482–4475

Japan

Synthetic Methionine
A–588–041
38 FR 18382
July 10, 1973
Contact: Michael Heaney at (202) 482–4475

Kazakhstan

Solid Urea
A–834–801
52 FR 26366
July 14, 1987
Contact: Thomas Barlow at (202) 482–5256

Kyrgyzstan

Solid Urea
A–835–801
52 FR 26366
July 14, 1987
Contact: Thomas Barlow at (202) 482–5256

Latvia

Solid Urea
A–449–801
52 FR 26366
July 14, 1987
Contact: Thomas Barlow at (202) 482–5256

Lithuania

Solid Urea
A–451–801
52 FR 26366
July 14, 1987
Contact: Thomas Barlow at (202) 482–5256

Moldova

Solid Urea
A–841–801
52 FR 26366
July 14, 1987
Contact: Thomas Barlow at (202) 482–5256

Romania

Solid Urea
A–485–601
53 FR 26366
July 14, 1987
Contact: Thomas Barlow at (202) 482–5256

Russia

Solid Urea
A–821–801
52 FR 26366
July 14, 1987
Contact: Thomas Barlow at (202) 482–5256

South Korea

Industrial Nitrocellulose
A–580–805
55 FR 28266
July 10, 1990
Contact: Rebecca Trainor at (202) 482–0666

Tajikistan

Solid Urea
A–842–801
52 FR 26366
July 14, 1987
Contact: Thomas Barlow at (202) 482–5256

The People's Republic of China

Industrial Nitrocellulose
A–570–802
55 FR 28267
July 10, 1990
Contact: Rebecca Trainor at (202) 482–0666

The Ukraine

Solid Urea
A–823–801
52 FR 26366
July 14, 1987
Contact: Thomas Barlow at (202) 482–5256

Turkmenistan

Solid Urea
A–843–801
52 FR 26366
July 14, 1987
Contact: Thomas Barlow at (202) 482–5256

Uzbekistan

Solid Urea
A–844–801
52 FR 26366
July 14, 1987
Contact: Thomas Barlow at (202) 482–5256

If no interested party requests an administrative review in accordance with the Department's notice of opportunity to request administrative review, and no domestic interested party objects to the Department's intent to revoke or terminate pursuant to this notice, we shall conclude that the antidumping duty orders, findings, and suspended investigations are no longer of interest to interested parties and shall proceed with the revocation or termination.

Opportunity to Object

Domestic interested parties, as defined in § 353.2(k)(3), (4), (5), and (6) of the Department's regulations, may object to the Department's intent to revoke these antidumping duty orders and findings or to terminate the suspended investigations by the last day

of July 1995. Any submission to the Department must contain the name and case number of the proceeding and a statement that explains how the objecting party qualifies as a domestic interested party under § 353.2(k)(3), (4), (5), and (6) of the Department's regulations.

Seven copies of such objections should be submitted to the Assistant Secretary for Import Administration, International Trade Administration, Room B–099, U.S. Department of Commerce, Washington, D.C. 20230. You must also include the pertinent certification(s) in accordance with § 353.31(g) and § 353.31(i) of the Department's regulations. In addition, the Department requests that a copy of the objection be sent to Michael F. Panfeld in Room 4203.

This notice is in accordance with 19 CFR 353.25(d)(4)(i).

Dated: June 26, 1995.

Joseph A. Spetrini,

Deputy Assistant Secretary for Compliance.

[FR Doc. 95–16300 Filed 6–30–95; 8:45 am]

BILLING CODE 3510–DS–P

[A–580–601]

Certain Stainless Steel Cooking Ware From the Republic of Korea: Preliminary Results of Antidumping Duty Administrative Reviews

AGENCY: Import Administration, International Trade Administration, Department of Commerce.

ACTION: Notice of Preliminary Results of Antidumping Duty Administrative Reviews.

SUMMARY: In response to requests from Farberware, Inc. (the petitioner), the Department of Commerce (the Department) is conducting administrative reviews of the antidumping duty order on certain stainless steel cooking ware from the Republic of Korea. This notice of the preliminary results covers three consecutive review periods for January 1, 1991 through December 31, 1991, January 1, 1992 through December 31, 1992, and January 1, 1993 through December 31, 1993. The 1991 and 1992 reviews cover two manufacturers/exporters, Namil Metal Company (Namil) and Daelim Trading Company, Ltd. (Daelim). The 1993 review covers one manufacturer/exporter, Daelim. The reviews indicate the existence of dumping margins during these periods.

We have preliminarily determined that sales have been made below the foreign market value (FMV). If these preliminary results are adopted in our final results of administrative review, we will instruct the U.S. Customs Service (Customs) to assess antidumping duties equal to the difference between the United States price (USP) and the FMV. Interested parties are invited to comment on these preliminary results.

EFFECTIVE DATE: July 3, 1995.

FOR FURTHER INFORMATION CONTACT: Amy S. Wei or Zev Primor, Office of Antidumping Compliance, Import Administration, International Trade Administration, U.S. Department of Commerce, 14th Street and Constitution Avenue, NW., Washington, DC 20230; telephone (202) 482–5253.

SUPPLEMENTARY INFORMATION:

Background

The Department published an antidumping duty order on certain stainless steel cooking ware from the Republic of Korea on January 20, 1987 (52 FR 2139). The Department published notices of ''Opportunity To Request an Administrative Review'' of the antidumping duty order for the 1991 review period (56 FR 66846, December 26, 1991), for the 1992 review period (58 FR 4148, January 13, 1993), and for the 1993 review period (59 FR 564, January 5, 1994). On January 31, 1991, the petitioner requested that the Department conduct an administrative review of the antidumping duty order on certain stainless steel cooking ware from the Republic of Korea for two manufacturers/exporters, covering the period January 1, 1991 through December 31, 1991. We initiated the 1991 review on February 24, 1992 (57 FR 6314). On January 27, 1993, the petitioner requested that the Department conduct an administrative review of the antidumping duty order on certain stainless steel cooking ware from the Republic of Korea for two manufacturers/exporters, covering the period January 1, 1992 through December 31, 1992. We initiated the 1992 review on March 8, 1993 (58 FR 12931). On January 31, 1994, the petitioner requested that the Department conduct an administrative review of the antidumping duty order on certain stainless steel cooking ware from the Republic of Korea for one manufacturer/exporter, covering the period January 1, 1993 through December 31, 1993. We initiated the 1993 review on February 17, 1994 (59 FR 7979).

The Department is now conducting reviews for these periods in accordance with section 751 of the Tariff Act of 1930, as amended (the Act).

Scope of the Review

The products covered by these administrative reviews are certain stainless steel cooking ware from the Republic of Korea. During the review periods, such merchandise was classifiable under Harmonized Tariff Schedule (HTS) item number 7323.93.00. The products covered by this order are skillets, frying pans, omelette pans, saucepans, double boilers, stock pots, dutch ovens, casseroles, steamers, and other stainless steel vessels, all for cooking on stove top burners, except tea kettles and fish poachers. Excluded from the scope is stainless steel kitchen ware. The HTS item number is provided for convenience and Customs' purposes. The written description remains dispositive as to the scope of the product coverage.

The review periods (POR) are January 1, 1991 through December 31, 1991, January 1, 1992 through December 31, 1992, and January 1, 1993 through December 31, 1993, respectively. The 1991 and 1992 reviews cover two companies, Namil and Daelim. The 1993 review covers one company, Daelim.

Use of Best Information Available

Namil

For the 1991 review, in filing its questionnaire response, Namil failed to submit computer tapes of all sales data in a timely manner. Because this data was provided after the due date, the Department rejected this additional submission in accordance with 19 CFR 353.31(b)(2). Therefore, in the case of Namil, we have calculated a dumping margin using the best information available (BIA), in accordance with section 776(c) of the Act and 19 CFR 353.37(b).

In determining what to use as BIA, the Department follows a two-tiered methodology. The Department assigns lower margins to those respondents who cooperate in a review (tier two), and margins based on more adverse assumptions for those respondents who do not cooperate in the review, or who significantly impede the proceeding (tier one)(*see Allied Signal Aerospace Co.* v. *United States*, 996 F.2d 1185 (Fed.Cir., June 22, 1993), *aff'd*, 28 F.3d 1188, *cert. denied*, 1995 U.S. Lexis 100 (1995) (*Allied-Signal*)).

When a company substantially cooperates with our requests for information, but fails to provide the information requested in a timely manner or in the form requested, we assign the company second-tier BIA, which is the higher of (1) the firm's

highest rate (including the ''all others'' rate) for the same class or kind of merchandise from the same country from a prior administrative review or, if the firm has never before been investigated or reviewed, the ''all others'' rate from the less-than-fair-value (LTFV) investigation; or (2) the highest calculated rate in this review for any firm for the class or kind of merchandise from the same country of origin (*see Allied-Signal*, 28 F.3d at 1189, 1190 n.2).

Because Namil submitted the narrative portion of the questionnaire response in a timely manner, we are using cooperative BIA as the basis for Namil's margin for the 1991 review. For Namil, we have used, as BIA, 11.22 percent, which is the highest rate calculated in this review.

For the 1992 review, Namil failed to respond to the Department's questionnaire. When a company refuses to cooperate with the Department, or otherwise significantly impedes the Department's proceedings, it assigns that company first-tier BIA, which is the higher of (1) the highest of the rates found for any firm for the same class or kind of merchandise in the same country of origin in the LTFV investigation or a prior administrative review; or (2) the highest calculated rate found in the present administrative review for any firm for the same class or kind of merchandise from the same country of origin (*Id.*).

We, therefore, are using uncooperative BIA as the basis for Namil's margin in the 1992 review. For Namil, we have used, as BIA, 31.23 percent, which is the highest rate calculated for any firm in the first review (*see Certain Stainless Steel Cooking Ware from the Republic of Korea; Final Results of Antidumping Duty Administrative Review*, 58 FR 9560, February 22, 1993).

Daelim

Daelim responded to the Department's questionnaires. However, at verification for the 1991 review, we discovered some U.S. sales, with either sale dates or U.S. entry dates during the POR, which Daelim had failed to report in its original and supplemental questionnaire responses. The submission of U.S. sales is a critical element in our calculation of the dumping margin. Failure to provide all of the U.S. sales is a serious omission, which can cause our dumping margin to be distorted. This failure of Daelim to fully respond to the Department's questionnaire in a timely manner has led the Department to apply partial BIA to its U.S. sales in accordance with section 776(c). In applying partial BIA to Daelim's U.S. sales, we used to these unreported U.S. sales the highest rate found for any firm for the same class or kind or merchandise in the same country of origin in the LTFV investigation or a prior administrative review. We have applied as BIA for these unreported sales a rate of 31.23 percent, which was the highest rate calculated for any firm in the first review (*Id.*).

United States Price

In calculating USP for Daelim for each review, the Department used purchase price, as defined in section 772 of the Act, because the merchandise was sold to unrelated U.S. purchasers prior to importation and exporter's sales price was not otherwise indicated. Purchase price was based on the packed, FOB price to unrelated purchasers in the United States. For each review, we made deductions from the unit price, where applicable, for terminal handling charges, brokerage charges, inland freight, wharfage, container freight station (CFS) charges, export license recommendation fees, outer (shipment) packaging, and miscellaneous, bank-related expenses. We made an addition to Daelim's USP for duty drawback in accordance with section 772(d)(2) of the Act.

In the 1991 review, Daelim claimed that it incurred warranty expenses to one U.S. customer on sales which occurred prior to the POR. At verification, we discovered that Daelim's warranty expenses were actually a recision of a price increase to the U.S. customer. Daelim's invoices reported the lower price that the U.S. customer had actually paid for the merchandise. However, in its response to the Department's questionnaire, Daelim reported the price to the customer including the price increase. Consequently, we used the actual lower price charged by Daelim to that customer, rather than the prices for U.S. sales reported by Daelim on its computer tape. Because some selling expenses were based on sales value, we made additional adjustments to Daelim's reported U.S. brokerage expense and export license recommendation fee for sales to the one U.S. customer. We did not make a warranty expense adjustment to the USP of the other U.S. customers. Daelim did not incur any warranty expenses during the 1992 and 1993 PORs.

For those U.S. sales which Daelim failed to report prior to verification for the 1991 review with either sale dates or entry dates during the POR, we applied a BIA rate of 31.23 percent.

No other adjustments to USP were claimed or allowed.

Foreign Market Value

For the purposes of the preliminary reviews, we determined that, due to the nature of the merchandise under review, none of the cooking ware sold in the United States could reasonably be compared to cooking ware sold in the home market. This is due to the fact that the majority of the cooking ware sold in the United States consisted of semi-finished products for further manufacturing in the United States, whereas the cooking ware sold in the home market consisted of finished products. Under the Department's standard practice, we only compare U.S. products with products that have a difference in variable cost of manufacture (difmer) of less than 20 percent. Because products sold in the home market did not pass the Department's difmer test, we did not use the home market sales as a basis for FMV. In accordance with section 773(a)(2) of the Act, we calculated FMV based on constructed value of the models sold in the United States for the 1991, 1992, and 1993 reviews (*see Large Power Transformers from Japan; Final Results of Antidumping Duty Administrative Review*, 57 FR 45767, DOC Position to Comment 1, October 5, 1992, and *High Information Content Flat Panel Displays and Display Glass Therefore from Japan; Final Determination; Rescission of Investigation and Partial Dismissal of Petition*, 56 FR 32376, 32388, DOC Position to Hosiden Comment 1, July 16, 1991).

In accordance with section 773(e) of the Act, the constructed value of the models sold in the United States included materials, fabrication, general expenses, profit, and packing. As a result of our verification findings for the 1991 review, we recalculated Daelim's 1991 reported costs for direct labor, variable overhead, interest expense, profit, direct selling expenses, indirect selling expenses, imputed credit, and general and administrative expenses for the purpose of deriving constructed value. We multiplied each by a factor based on our findings during the verification of Daelim's reported cost data.

As a result, we recalculated total cost of manufacturing, total cost of production, and total constructed value based on the changes to Daelim's reported costs for the 1991 review. Revised total cost of manufacturing equalled the sum of revised direct labor, revised variable overhead, fixed overhead, and direct material costs.

Revised total cost of production equalled the sum of revised total cost of manufacturing, revised direct selling expense, revised indirect selling expense, revised imputed credit expense, revised general and administrative expense, and revised interest expense. Revised total constructed value equalled the sum of revised total cost of production and revised profit.

As a result of our verification findings for the 1992 and 1993 reviews, we recalculated Daelim's reported costs for the respective period for general and administrative expenses, interest, and profit for the purpose of deriving constructed value, in accordance with section 773(e) of the Act. As a result, we recalculated total cost of production and total constructed value based on the changes to Daelim's reported costs for the 1992 and 1993 reviews. Revised total cost of production equalled the sum of total cost of manufacturing and total general expenses, which included revised general and administrative expenses, revised interest expenses, and selling expenses. Revised total constructed value equalled the sum of revised total cost of production and revised profit. In the 1993 review, in accordance with 19 CFR 353.56 (b)(1), we offset commissions paid in the U.S. market with indirect selling expenses from the home market since no commissions were paid in the home market.

In accordance with section 773(e)(1)(B) of the Act, we used the statutory minima of 8 percent for profit and 10 percent for general expenses for each review since reported profits and general expenses were less than the statutory minima for each review.

Preliminary Results

As a result of our reviews, we preliminarily determine the dumping margins to be:

Manufacturer/Exporter	Time Period	Margin (percent)
Namil Metal Company, Ltd	1/1/91–12/31/91	11.22
Daelim Trading Company, Ltd	1/1/91–12/31/91	11.22
Namil Metal Company, Ltd	1/1/92–12/31/92	31.23
Daelim Trading Company, Ltd	1/1/92–12/31/92	3.43
Daelim Trading Company, Ltd	1/1/93–12/31/93	0.14

Parties to this proceeding may request disclosure within 5 days of publication of this notice and any interested party may request a hearing within 10 days of publication. Any hearing, if requested, will be held 44 days after the date of publication, or the first working day thereafter. Interested parties may submit case briefs and/or written comments no later than 30 days after the date of publication. Rebuttal briefs and rebuttals to written comments, limited to issues raised in such briefs or comments, may be filed no later than 37 days after the date of publication. The Department will publish a notice of the final results of these administrative reviews, which will include the results of its analysis of issues raised in any such briefs or comments.

The Department shall determine, and Customs shall assess, antidumping duties on all appropriate entries. Individual differences between USP and FMV may vary from the percentages stated above. The Department will issue appraisement instructions directly to Customs.

Furthermore, the following deposit requirements will be effective upon completion of the final results of these administrative reviews for all shipments of certain stainless steel cooking ware from the Republic of Korea entered, or withdrawn from warehouse, for consumption on or after the publication date of the final results of these administrative reviews, as provided by section 751(a)(1) of the Act: (1) the cash deposit rates for Namil will be that margin established in the final results of these reviews; (2) if Daelim's latest period of review rate remains *de minimis* for the final results, Customs will require a cash deposit of zero percent; (3) for merchandise exported by manufacturers or exporters not covered in these reviews but covered in the original LTFV investigation or a previous review, the cash deposit will continue to be the most recent rate published in the final determination or final results for which the manufacturer or exporter received a company-specific rate; (4) if the exporter is not a firm covered in these reviews, or the original investigation, but the manufacturer is, the cash deposit rate will be that established for the manufacturer of the merchandise in the final results of these reviews, or the LTFV investigation; and (5) if neither the exporter nor the manufacturer is a firm covered in these or any previous reviews, the cash deposit rate will be 8.10 percent, the ''all others'' rate established in the LTFV investigation (52 FR 2139, January 20, 1987).

Article VI, paragraph 5 of the General Agreement on Tariffs and Trade provides that ''[n]o product * * * shall be subject to both antidumping and countervailing duties to compensate for the same situation of dumping and export subsidization.'' This provision is implemented by section 772(d)(1)(D) of the Act. Since antidumping duties cannot be assessed on the portion of the margin attributable to export subsidies, there is no reason to require a cash deposit or a bond for that amount. Accordingly, before completion of the final results of these administrative reviews, the level of export subsidies as determined in *Certain Stainless Steel Cooking Ware from the Republic of Korea; Final Affirmative Countervailing Duty Determination*, 51 FR 42867 (November 26, 1986), which is 0.71 percent *ad valorem*, will be subtracted from the dumping margin for cash deposit purposes. There have been no reviews conducted since the publication of the countervailing duty order.

This notice also serves as a preliminary reminder to importers of their responsibility under 19 CFR 353.26(b) to file a certificate regarding the reimbursement of antidumping duties prior to liquidation of the relevant entries during these review periods. Failure to comply with this requirement could result in the Secretary's presumption that reimbursement of antidumping duties occurred and the subsequent assessment of double antidumping duties.

These administrative reviews and notice are in accordance with section 751(a)(1) of the Act (19 U.S.C. 1675(a)(1)) and 19 CFR 353.22.

Dated: June 26, 1995.

Susan G. Esserman,

Assistant Secretary for Import Administration.

[FR Doc. 95–16305 Filed 6–30–95; 8:45 am]

BILLING CODE 3510–DS–P

[A–401–603; A–401–206]

Welded Stainless Steel Hollow Products From Sweden; Opportunity To Request Administrative Review

AGENCY: Import Administration, International Trade Administration, Department of Commerce.

ACTION: Notice of opportunity to request administrative review of antidumping duty order.

BACKGROUND: On October 9, 1987, the Department of Commerce (the Department) published in the **Federal Register** the final determination of its investigation of sales at less-than-fair-value (LTFV) of stainless steel hollow products (SSHP) from Sweden (52 FR 37810). On November 25, 1987, the International Trade Commission (ITC) published its final determination, in which it found that imports of seamless SSHP were causing material injury to the U.S. industry, but that imports of welded SSHP were not causing injury, or threatening to cause injury, to the U.S. industry (52 FR 45246). Therefore, on December 3, 1987, the Department published an antidumping duty order covering only seamless SSHP from Sweden (A–401–603).

Subsequently, the domestic producers of SSHP challenged the ITC's negative determination with respect to imports of welded SSHP before the Court of International Trade (CIT). On June 20, 1990, the CIT remanded the determination to the ITC. Upon remand, the ITC determined that the U.S. industry was materially injured by imports of welded SSHP from Sweden. The CIT affirmed the ITC's redetermination on November 27, 1990. Accordingly, the Department published in the **Federal Register** a notification of the CIT's decision, and instructions, effective December 7, 1990, to suspend the liquidation of entries of welded SSHP from Sweden (55 FR 51745, December 17, 1990).

Following the Court of Appeals for the Federal Circuit's (CAFC) affirmation of the CIT's decision, the ITC published its final affirmative determination of injury for the antidumping duty investigation of welded SSHP from Sweden (57 FR 42761). Subsequently, the Department published an amended antidumping duty order for SSHP from Sweden on November 5, 1992 (57 FR 52761) in order to include welded, along with seamless, SSHP in the scope of the order.

The Department is now issuing an opportunity notice for interested parties, as defined in section 771(9) of the Tariff Act of 1930, as amended, to request, in accordance with section 353.22 of the Department's regulations (1993), that the Department conduct administrative reviews of the antidumping duty order on welded SSHP for the periods December 7, 1990 through November 30, 1991, and December 1, 1991 through November 30, 1992.

Additionally, since the Department considers welded and seamless SSHP to be a single class or kind of merchandise, we are disregarding the separate case number (A–401–206) under which the Department instructed the Customs Service (Customs) to suspend liquidation of entries of welded SSHP and have instructed Customs to suspend the liquidation of all entries of SSHP under the original case number (A–401–603). Furthermore, since we intend to conduct any administrative reviews requested as a result of this notice under the original case number (A–401–603), all requests for administrative reviews should be filed under this case number.

OPPORTUNITY TO REQUEST A REVIEW: Not later than July 31, 1995, interested parties may request administrative reviews of the following order for the following periods:

Antidumping duty proceedings	Period
SWEDEN: Stainless Steel Welded Hollow Products (A–401–603)	12/07/90–11/30/91
SWEDEN: Stainless Steel Welded Hollow Products (A–401–603)	12/01/91–11/30/92

In accordance with sections 353.22(a) of the regulations, an interested party as defined by section 353.2(k) may request in writing that the Secretary conduct an administrative review. The interested party must specify for which individual producers or resellers covered by an antidumping finding or order it is requesting a review, and must state why it desires the Secretary to review those particular producers or resellers.

Seven copies of the request should be submitted to the Assistant Secretary for Import Administration, International Trade Administration, Room B–099, U.S. Department of Commerce, Washington, D.C. 20230. The Department also asks parties to serve a copy of their requests to the Office of Antidumping Compliance, Attention: John Kugelman, in room 3065 of the main Commerce Building. Further, in accordance with section 353.3l(g), a copy of each request must be served on every party on the Department's service list.

The Department will publish in the **Federal Register** a notice of ''Initiation of Antidumping Duty Administrative Review,'' for requests received by July 31, 1995. If the Department does not receive, by July 31, 1995, a request for review of entries covered by the order listed in this notice and for the period identified above, the Department will instruct Customs to assess antidumping duties on those entries at a rate equal to the cash deposit of (or bond for) estimated antidumping duties required on those entries at the time of entry, or withdrawal from warehouse, for consumption and to continue to collect the cash deposit previously ordered.

This notice is not required by statute, but is published as a service to the international trading community.

Dated: June 22, 1995.

Joseph A. Spetrini,

Deputy Assistant Secretary for Compliance.

[FR Doc. 95–16311 Filed 6–30–95; 8:45 am]

BILLING CODE 3510–DS–P

Quarterly Update to Annual Listing of Foreign Government Subsidies on Articles of Quota Cheese

AGENCY: Import Administration, International Trade Administration, Department of Commerce.

ACTION: Publication of Quarterly Update to Annual Listing of Foreign Government Subsidies on Articles of Quota Cheese.

SUMMARY: The Department of Commerce (the Department), in consultation with the Secretary of Agriculture, has prepared a quarterly update to its annual list of foreign government subsidies on articles of quota cheese. We are publishing the current listing of those subsidies that we have determined exist.

EFFECTIVE DATE: July 1, 1995.

FOR FURTHER INFORMATION CONTACT: Brian Albright or Maria MacKay, Office of Countervailing Compliance, Import Administration, International Trade Administration, U.S. Department of Commerce, 14th Street and Constitution Ave., NW., Washington, DC 20230, telephone: (202) 482–2786.

SUPPLEMENTARY INFORMATION: Section 702(a) of the Trade Agreements Act of 1979 (the Act) requires the Department to determine, in consultation with the Secretary of Agriculture, whether any foreign government is providing a subsidy with respect to any article of quota cheese, as defined in section 701(c)(1) of the Act, and to publish an annual list and quarterly updates of the type and amount of those subsidies.

The Department has developed, in consultation with the Secretary of Agriculture, information on subsidies (as defined in section 702(h)(2) of the Act) being provided either directly or indirectly by foreign governments on articles of quota cheese. The appendix to this notice lists the country, the subsidy program or programs, and the gross and net amounts of each subsidy for which information is currently available.

The Department will incorporate additional programs which are found to constitute subsidies, and additional information on the subsidy programs listed, as the information is developed.

The Department encourages any person having information on foreign government subsidy programs which benefit articles of quota cheese to submit such information in writing to the Assistant Secretary for Import Administration, U.S. Department of Commerce, 14th Street and Constitution Avenue, NW., Washington, DC 20230.

This determination and notice are in accordance with section 702(a) of the Act.

Dated: June 26, 1995.

Susan G. Esserman,

Assistant Secretary for Import Administration.

APPENDIX—QUOTA CHEESE SUBSIDY PROGRAMS

Country	Program(s)	Gross [1] subsidy	Net [2] subsidy
Austria	Export Restitution Payments	58.4¢/lb.	58.4/lb.
Belgium	European Community (EC) Restitution Payments	41.4¢/lb.	41.4¢/lb.
Canada	Export Assistance on Certain Types of Cheese	24.9¢/lb.	24.9¢/lb.
Denmark	EC Restitution Payments	42.2¢/lb.	42.2¢/lb.
Finland	Export Subsidy	55.7¢/lb.	55.7¢/lb.
France	EC Restitution Payments	37.8¢/lb.	37.8¢/lb.
Germany	EC Restitution Payments	50.1¢/lb.	50.1¢/lb.
Greece	EC Restitution Payments	0.0¢/lb.	0.0¢/lb.
Ireland	EC Restitution Payments	35.2¢/lb.	35.2¢/lb.
Italy	EC Restitution Payments	88.8¢/lb.	88.8¢/lb.
Luxembourg	EC Restitution Payments	41.4¢/lb.	41.4¢/lb.
Netherlands	EC Restitution Payments	38.5¢/lb.	38.5¢/lb.
Norway	Indirect (Milk) Subsidy	18.4¢/lb.	18.4¢/lb.
	Consumer Subsidy	40.8¢/lb.	40.8¢/lb.
Total		59.2¢/lb.	59.2¢/lb.
Portugal	EC Restitution Payments	33.8¢/lb.	33.8¢/lb.
Spain	EC Restitution Payments	44.4¢/lb.	44.4¢/lb.
Switzerland	Deficiency Payments	171.2¢/lb.	171.2¢/lb.
U.K.	EC Restitution Payments	35.3¢/lb.	35.3¢/lb.

[1] Defined in 19 U.S.C. 1677(5).
[2] Defined in 19 U.S.C. 1677(6).

[FR Doc. 95–16304 Filed 6–30–95; 8:45 am]

BILLING CODE 3510–DS–P

Determination Not To Revoke Countervailing Duty Orders

AGENCY: Import Administration, International Trade Administration, Department of Commerce.

ACTION: Notice of Determination Not to Revoke Countervailing Duty Orders.

SUMMARY: The Department of Commerce (the Department) is notifying the public of its determination not to revoke the countervailing duty orders listed below.

EFFECTIVE DATE: July 3, 1995.

FOR FURTHER INFORMATION CONTACT: Brian Albright or Maria MacKay, Office of Countervailing Compliance, Import Administration, International Trade Administration, U.S. Department of Commerce, 14th Street and Constitution Avenue, N.W., Washington, D.C. 20230; telephone: (202)482–2786.

SUPPLEMENTARY INFORMATION:

Background

On March 31, 1995, the Department published in the **Federal Register** (60 FR 16620) its intent to revoke the countervailing duty orders listed below. Under 19 CFR 355.25(d)(4)(iii), the Secretary of Commerce will conclude that an order is no longer of interest to interested parties and will revoke the order if no domestic interested party (as defined in sections 355.2(i)(3), (i)(4), (i)(5), and (i)(6) of the regulations) objects to revocation and no interested party requests an administrative review by the last day of the 5th anniversary month.

Within the specified time frame, for these countervailing duty orders, we received either an objection from a domestic interested party to our intent to revoke or a request for review. Therefore, because the requirements of 19 CFR 355.25(d)(4)(iii) have not been met, we will not revoke these orders.

This determination is in accordance with 19 CFR 355.25(d)(4).

Countervailing Duty Orders

Argentina: Wool (C–357–002), 04/04/83, 48 FR 14423

Malaysia: Carbon Steel Wire Rod (C–557–701), 04/22/88, 53 FR 13303

Peru: Pompon Chrysanthemums (C–333–601), 04/23/87, 52 FR 13491

Dated: June 22, 1995.

Joseph A. Spetrini,

Deputy Assistant Secretary for Compliance.

[FR Doc. 95–16301 Filed 6–30–95; 8:45 am]

BILLING CODE 3510–DS–P

[C–614–503]

Lamb Meat From New Zealand; Termination of Countervailing Duty Administrative Review

AGENCY: Import Administration, International Trade Administration, Department of Commerce.

ACTION: Notice of Termination of Countervailing Duty Administrative Review.

SUMMARY: The Department of Commerce (the Department) is terminating the

1993–1994 administrative review on lamb meat from New Zealand because the countervailing duty order has been revoked effective March 31, 1993. The review was initiated on October 13, 1994, (59 FR 51939) for the period April 1, 1993 through March 31, 1994.

EFFECTIVE DATE: July 3, 1995.

FOR FURTHER INFORMATION CONTACT: Gayle Longest or Kelly Parkhill, Office of Countervailing Compliance, Import Administration, International Trade Administration, U.S. Department of Commerce, 14th Street and Constitution Avenue, N.W., Washington, D.C., 20230; telephone: (202) 482–2786.

SUPPLEMENTARY INFORMATION:

Background

On May 22, 1995, the Department issued the final results of the administrative review for the 1992–1993 period of review, and revoked the entire countervailing duty order effective March 31, 1993 (60 FR 27082). The Department found that the GONZ had met the requirements for revocation of the countervailing duty order pursuant to 19 CFR § 355.25(a)(1) and 19 CFR 355.25(b)(1). Based upon certification by GONZ, as well as from the Department's previous two consecutive administrative reviews, the Department determined that the GONZ has abolished all subsidy programs for lamb meat for a period of three consecutive years. In addition, the GONZ has certified that it will not reinstate the abolished programs or substitute other countervailable programs. The Department further determined that there was no likelihood that the GONZ would substitute or replace formerly countervailable programs with new subsidies.

Prior to the Department's final determination to revoke the order, there was an opportunity for interested parties to request an administrative review of this order for the period April 1, 1993, through March 31, 1994. The GONZ submitted a request for an administrative review of this period on September 30, 1994 and the Department initiated the review on October 13, 1994 (59 FR 51939).

Since the Department revoked the order effective March 31, 1993, there is no basis for completing the administrative review covering the 1993–1994 period. Therefore, the Department is hereby terminating this review.

Dated: June 22, 1995.

Joseph A. Spetrini,

Deputy Assistant Secretary for Compliance.

[FR Doc. 95–16306 Filed 6–30–95; 8:45 am]

BILLING CODE 3510–DS–P

National Oceanic and Atmospheric Administration

[Docket No. 950621163–5163–01]

RIN: 0648–ZA17

NOAA Pan-American Climate Studies (PACS), Program Announcement

AGENCY: Office of Global Programs, National Oceanic and Atmospheric Administration, Commerce.

ACTION: Notice.

SUMMARY: The Pan-American Climate Studies (PACS) Program is a contribution to the National Oceanic and Atmospheric Administration (NOAA) Climate and Global Change Program, and as such is designed to improve our ability to observe, understand, predict, and respond to changes in the global environment. This program builds on NOAA's mission requirements and longstanding capabilities in global change research and prediction. The PACS Program is a contributing element of the U.S. Global Change Research Program (USGCRP), which is coordinated by the interagency Committee on Environmental and Natural Resources. NOAA's program is designed to complement other agency contributions to that national effort.

DATES: Strict deadlines for submission to the FY 1996 process are: Letters of Intent must be received at the Office or Global Program (OGP) no later than August 2, 1995. Full proposals must be received at OGP no later than September 22, 1995. Applicants should receive notification of the suitability of their intended proposals by August 11, 1995. Investigators who have not received notification by that date should contact the program office. The time from target date to grant award varies with program area. We anticipate that review of the full proposal will occur during the fall of 1995 and funding should begin during the early spring of 1996 for most approved projects. April 1, 1996, should be used as the proposed start date on proposals, unless otherwise directed by a Program Manager. Applicants should be notified of their status within 6 months. All proposals must be submitted in accordance with the guidelines below. Failure to heed these guidelines may result in proposals being returned without review.

ADDRESSES: Proposals should be submitted to:

Office of Global Programs, National Oceanic and Atmospheric Administration, 1100 Wayne Avenue, Suite 1225, Silver Spring, MD 20910–5603, Attn: Michael Patterson

An Applications Kit can be obtained from: Grant Management Division, National Oceanic and Atmospheric Administration, 1325 East West Highway, Room 5426, Silver Spring, MD 20910.

FOR FURTHER INFORMATION CONTACT:

Michael Patterson at the above address, 301–427–2089x12, Internet: Patterson@ogp.noaa.gov; or Stephen Piotrowicz, NOAA/Office of Oceanic and Atmospheric Research, 1315 East-West Highway, Rm 11560, Silver Spring, MD 20910, 301–713–2465, Internet: SPiotrowicz@oar.noaa.gov.

SUPPLEMENTARY INFORMATION:

Funding Availability

This Program Announcement is for projects to be conducted by investigators both inside and outside of NOAA, over a period of up to three years. NOAA believes that the Climate and Global Change Program will benefit significantly from a strong partnership with outside investigators. Current Program plans assume that approximately 50% of the total anticipated new resources available ($0–5–1.0 million) in FY 1996 will support extramural efforts, particularly those involving the academic community. Actual funding levels may be subject to change depending on the final FY 1996 budget appropriation. For Federal Government investigators, funding will be provided through intra- or interagency transfers, as appropriate. For non-Federal investigators, the funding instrument will be a grant unless it is anticipated that NOAA will be substantially involved in the implementation of the project for which an award is to be made, in which case the funding instrument should be a cooperative agreement. Examples of substantial involvement may include but are not limited to proposals for collaboration between NOAA or NOAA scientists and a recipient scientist or technician and/or contemplation by NOAA of detailing Federal personnel to work on proposed projects. NOAA will make decisions regarding the use of a cooperative agreement on a case-by-case basis. Funding for non-U.S. institutions and contractual arrangements for services and products for delivery to NOAA are not available under this announcement.

Program Authority

Authority: 49 U.S.C. App. 1463; 33 U.S.C. 883d, 883e; 15 U.S.C. 2904; 15 U.S.C. 2931 et seq.

(CFDA No. 11.431)—Climate and Atmospheric Research

Program Objectives

PACS is a joint Program of the NOAA Office of Global Programs (OGP) and Office of Oceanic and Atmospheric Research (OAR)/Environmental Research Laboratories (ERL) which falls within the scope of the U.S. GOALS (Global Ocean-Atmosphere-Land System) Program. PACS is designed to advance the ability to predict seasonal to interannual climate variability, particularly summertime precipitation, over the Americas. Specific scientific objectives are to better understand and more realistically model (1) the seasonally varying mean climate over the Americas and adjacent ocean regions, with emphasis on the intertropical convergence zones, the North and South American monsoons, the equatorial cold tongues, the subtropical oceanic stratus decks, and the dominant tropical and extratropical cyclone tracks; (2) the role of boundary processes in forcing seasonal to interannual climate variability, with emphasis on tropical sea surface temperature in relation to continental precipitation; (3) the coupling between the oceanic mixed layer and the atmospheric planetary boundary layer in the tropical Atlantic and eastern Pacific; and (4) the processes that determine the structure and evolution of the tropical sea surface temperature field.

Program Priorities

With limited funding anticipated for new starts in FY 1996, NOAA will place emphasis on new projects designed to improve the understanding and modeling of coupled ocean-atmosphere interactions in the eastern tropical Pacific Ocean. This region has been identified as an initial target in PACS because of its importance in influencing the seasonally-varying precipitation over the American continents. Proposals are encouraged to focus on pilot field observations, data management, and empirical studies. Pilot field observing efforts are needed to provide improved measurements of rainfall, surface fluxes and upper ocean and atmospheric dynamics in the East Pacific Intertropical Convergence Zone (ITCZ) and other important phenomena in the eastern Pacific Ocean. Field observing projects are expected, to the greatest extent possible, to build upon existing observing systems and planned field projects and to be well coordinated with other observing efforts in the region. Data management activities should aim at providing PACS-related global data sets (particularly satellite observations), field projects, and modeling efforts. Empirical studies should provide preliminary analysis of data available in the eastern Pacific in an effort to establish the background climatology required for model validation and field program planning in this region. Proposals in response to the announcement are expected to be of one to three years duration.

Eligibility

Extramural eligibility is not limited and is encouraged with the objective of developing a strong partnership with the academic community. Non-academic proposers are urged to seek collaboration with academic institutions. Universities, non-profit organizations, for profit organizations, State and local governments, and Indian Tribes, are included among entities eligible for funding under this announcement.

The NOAA Climate and Global Change Program has been approved for multi-year funding up to a three year duration. Funding for non-U.S. institutions is not available under this announcement.

Letters of Intent

Letters of Intent: (1) Letters should be no more than two pages in length and include the name and institution of principal investigator(s), a statement of the problem, brief summary of work to be completed, approximate cost of the project, and program element(s) to which the proposal should be directed. (2) Evaluation will be by program management, according to the selection criteria for full proposals described. (3) It is in the best interest of applicants and their institutions to submit letters of intent; however, it is not a requirement. (4) Facsimile and electronic mail are acceptable for letters of intent only. (5) Projects deemed unsuitable during program review should not be submitted as full proposals.

Evaluation Criteria

Consideration for financial assistance will be given to those proposals which address one of the Program Priorities listed above and meet the following evaluation criteria:

(1) Scientific Merit (20%): Intrinsic scientific value of the subject and the study proposed.

(2) Relevance (20%): Importance and relevance to the goal of the Climate and Global Change Program and to the research areas listed above.

(3) Methodology (20%): Focused scientific objective and strategy, including measurement strategies and data management considerations; project milestones; and final products.

(4) Readiness (20%): Nature of the problem; relevant history and status of existing work; level of planning, including existence of supporting documents; strength of proposed scientific and management team; past performance record of proposers.

(5) Linkages (10%): Connections to existing or planned national and international programs; partnerships with other agency or NOAA participants, where appropriate.

(6) Costs (10%): Adequacy of proposed resources; appropriate share of total available resources; prospects for joint funding; identification of long-term commitments. Matching funding is encouraged, but is not required.

Selection Procedures

All proposals will be evaluated and ranked in accordance with the assigned weights of the above evaluation criteria by (1) independent peer mail review, and/or (2) independent peer panel review; both NOAA and non-NOAA experts in the field may be used in this process. Their individual recommendations and evaluations will be considered by the Program Managers in final selections. Those ranked by the panel and program as not recommended for funding will not be given further consideration and will be notified of non-selection. For the proposals rated either Excellent, Very Good or Good, the Program Managers will: (a) Ascertain which proposals meet the objectives, fit the criteria posted, and do not substantially duplicate other projects that are currently funded by NOAA or are approved for funding by other federal agencies, (b) select the proposals to be funded, (c) determine the total duration of funding for each proposal, and (d) determine the amount of funds available for each proposal. Awards are not necessarily made to the highest-scored proposals, even though scoring is one of several factors considered in selecting proposals for award.

Unsatisfactory performance by a recipient under prior Federal awards may result in an application not being considered for funding.

Proposal Submission

The guidelines for proposal preparation provided below are mandatory. Failure to heed these guidelines may result in proposals being returned without review.

(a) Full Proposals: (1) Proposals submitted to the NOAA Climate and Global Change Program must include the original and two unbound copies of the proposal. (2) Investigators are not

required to submit more than 3 copies of the proposal. (3) Proposals must be limited to 30 pages (numbered), including budget, investigators' vitae, and all appendices, and should be limited to funding requests for one to three year duration. Appended information may not be used to circumvent the page length limit. Federally mandated forms are not included within the page count. (4) Proposals should be sent to the NOAA Office of Global Programs at the above address. (5) Facsimile transmissions and electronic mail submission of full proposals will not be accepted.

(b) Required Elements: All proposals should include the following elements:

(1) Signed title page: The title page should be signed by the Principal Investigator (PI) and the institutional representative and should clearly indicate which project area is being addressed. The PI and institutional representative should be identified by fullname, title, organization, telephone number and address. The total amount of Federal funds being requested should be listed for each budget period.

(2) Abstract: An abstract must be included and should contain an introduction of the problem, rationale and a brief summary of work to be completed. The abstract should appear on a separate page, headed with the proposal title, institution(s) investigator(s), total proposed cost and budget period.

(3) Results from prior research: The results of related projects supported by NOAA and other agencies should be described, including their relation to the currently proposed work. Reference to each prior research award should include the title, agency, award number, PIs, period of award and total award. The section should be a brief summary and should not exceed two pages total.

(4) Statement of work: The proposed project must be completely described, including identification of the problem, scientific objectives, proposed methodology, relevance to the goal of the Climate and Global Change Program, and the program priorities listed above. Benefits of the proposed project to the general public and the scientific community should be discussed. A year-by-year summary of proposed work must be included clearly indicating that each year's proposed work is severable and can easily be separated into annual increments of meaningful work. The statement of work, including references but excluding figures and other visual materials, must not exceed 15 pages of text. Investigators wishing to submit group proposals that exceed the 15 page limit should discuss this possibility with the appropriate Program Officer prior to submission. In general, proposals from 3 or more investigators may include a statement of work containing up to 15 pages of overall project description plus up to 5 additional pages for individual project descriptions.

(5) Budget: Applicants must submit a Standard Form 424 (4–92) ''Application for Federal Assistance'', including a detailed budget using the Standard Form 424a (4–92), ''Budget Information—Non-Construction Programs''. The form is included in the standard NOAA application kit. The proposal must include detailed total and annual budgets corresponding with the descriptions provided in the statement of work. Additional text to justify expenses should be included as necessary.

(6) Vitae: Abbreviated curriculum vitae are sought with each proposal. Reference lists should be limited to all publications in the last three years with up to five other relevant papers.

(7) Current and pending support: For each investigator, submit a list that includes project title, supporting agency with grant number, investigator months, dollar value and duration. Requested values should be listed for pending support.

(8) List of suggested reviewers: The cover letter may include a list of individuals qualified and suggested to review the proposal. It also may include a list of individuals that applicants would prefer to not review the proposal. Such lists may be considered at the discretion of the Program Officer.

(c) Other requirements:

(1) Applicants may obtain a standard NOAA application kit from the Program Office.

Primary applicant Certification—All primary applicants must submit a completed Form CD–511, ''Certification Regarding Debarment, Suspension and Other Responsibility Matters: Drug-Free Workplace Requirements and Lobbying''. Applicants are also hereby notified of the following:

1. Nonprocurement Debarment and Suspension—Prospective participants (as defined at 15 CFR part 26, section 105) are subject to 15 CFR part 26, ''Nonprocurement Debarment and Suspension,'' and the related section of the certification from prescribed above applies;

2. Drug Free Workplace—Grantees (as defined at 15 CFR part 26, section 605) are subject to 15 CFR part 26, subpart F, ''Governmentwide Requirements for Drug-Free Workplace (Grants)'' and the related section of the certification form prescribed above applies;

3. Anti-Lobbying—Persons (as defined at 15 CFR part 28, section 105) are subject to the lobbying provisions of 31 U.S.C. 1352, ''Limitation on use of appropriated funds to influence certain Federal contracting and financial transactions'', and the lobbying section of the certification form prescribed above applies to applications/bids for grants, cooperative agreements, and contracts for more than $100,000, and loans and loan guarantees for more than $150,000, or the single family maximum mortgage limit for affected programs, whichever is greater; and

4. Anti-Lobbying Disclosures—Any applicant that has paid or will pay for lobbying using any funds must submit an SF–LLL, ''Disclosure of Lobbying Activities,'' as required under 15 CFR part 28, appendix B.

Lower Tier Certifications—Recipients must require applicants/bidders for subgrants, contracts, subcontracts, or lower tier covered transactions at any tier under the award to submit, if applicable, a completed Form CD–512, ''Certifications Regarding Debarment, Suspension, Ineligibility and Voluntary Exclusion-Lower Tier Covered Transactions and Lobbying'' and disclosure form SF–LLL, ''Disclosure of Lobbying Activities.'' Form CD–512 is intended for the use of recipients and should not be transmitted to DOC. SF–LLL submitted by any tier recipient or subrecipient should be submitted to DOC in accordance with the instructions contained in the award document.

(2) Recipients and subrecipients are subject to all applicable Federal laws and Federal and Department of Commerce policies, regulations, and procedures applicable to Federal financial assistance awards.

(3) Preaward Activities—If applicants incur any costs prior to an award being made, they do so solely at their own risk of not being reimbursed by the Government. Notwithstanding any verbal assurance that may have been received, there is no obligation to the applicant on the part of Department of Commerce to cover pre-award costs.

(4) This program is subject to the requirements of OMB Circular No. A–110, ''Uniform Administrative Requirements for Grants and Other Agreements with Institutions of Higher Education, Hospitals, and Other Non-Profit Organizations'', and 15 CFR part 24, ''Uniform Administrative Requirements for Grants and Cooperative Agreements to State and Local Governments'', as applicable. Applications under this program are not subject to Executive Order 12372,

''Intergovernmental Review of Federal Programs.''

(5) All non-profit and for-profit applicants are subject to a name check review process. Name checks are intended to reveal if any key individuals associated with the applicant have been convicted of, or are presently facing criminal charges such as fraud, theft, perjury, or other matters which significantly reflect on the applicant's management, honesty, or financial integrity.

(6) A false statement of an application is grounds for denial or termination of funds and grounds for possible punishment by a fine or imprisonment as provided in 18 U.S.C. 1001.

(7) No award of Federal funds shall be made to an applicant who has an outstanding delinquent Federal debt until either:

(i) The delinquent account is paid in full,

(ii) A negotiated repayment schedule is established and at least one payment is received, or

(iii) Other arrangements satisfactory to the Department of Commerce are made.

(8) Buy American-Made Equipment or Products—Applicants are encouraged that any equipment or products authorized to be purchased with funding provided under this program must be American-made to the maximum extent feasible.

(9) The total dollar amount of the indirect costs proposed in an application under this program must not exceed the indirect cost rate negotiated and approved by a cognizant Federal agency prior to the proposed effective date of the award or 100 percent of the total proposed direct cost dollar amount in the application, whichever is less.

(d) If an application is selected for funding, the Department of Commerce has no obligation to provide any additional future funding in connection with the award. Renewal of an award to increase funding or extend the period of performance is at the total discretion of the Department of Commerce.

(e) In accordance with Federal statutes and regulations, no person on grounds of race, color, age, sex, national origin or disability shall be excluded from participation in, denied benefits of, or be subjected to discrimination under any program or activity receiving financial assistance from the NOAA Climate and Global Change Program. The NOAA Climate and Global Change Program does not have direct TDD (Telephonic Device for the Deaf) capabilities, but can be reached through the State of Maryland supplied TDD contact number, 800–735–2258, between the hours of 8 a.m.–4:30 p.m.

Classification: This notice has been determined to be not significant for purposes of Executive Order 12866. The standard forms have been approved by the Office of Management and Budget pursuant to the Paperwork Reduction Act under OMB approval number 0348–0043–0348–0044, and 0348–0046.

Dated: June 27, 1995.

J. Michael Hall,

Director, Office of Global Programs, National Oceanic and Atmospheric Administration.

[FR Doc. 95–16288 Filed 6–30–95; 8:45 am]

BILLING CODE 3510–12–M

CONSUMER PRODUCT SAFETY COMMISSION

Notification of Request for Extension of Approval of Information Collection Requirements—Procedures for Export of Noncomplying Products

AGENCY: Consumer Product Safety Commission.

ACTION: Notice.

SUMMARY: In accordance with provisions of the Paperwork Reduction Act (44 U.S.C. Chapter 35), the Consumer Product Safety Commission has submitted to the Office of Management and Budget a request for extension of approval through September 30, 1998, of information collection requirements in regulations codified at 16 CFR Part 1019, which establish procedures for export of noncomplying products. These regulations implement provisions of the Consumer Product Safety Act, the Federal Hazardous Substances Act, and the Flammable Fabrics Act which require persons and firms to notify the Commission before exporting any product which fails to comply with an applicable standard or regulation enforced under provisions of those laws. The Commission is required by law to transmit the information relating to the proposed exportation to the government of the country of intended destination.

Additional Information About the Request for Extension of Approval of Information Collection Requirements

Agency address: Consumer Product Safety Commission, Washington, D.C. 20207.

Title of information collection: Procedures for export of noncomplying products.

Type of request: Extension of approval.

Frequency of collection: Varies depending upon volume of noncomplying goods exported.

General description of respondents: Exporters of products which fail to comply with standards or regulations enforced under provisions of the Consumer Product Safety Act, the Federal Hazardous Substances Act, or the Flammable Fabrics Act.

Estimated number of respondents: 160 per year.

Estimated average number of responses per respondent: 1.125 per year.

Estimated number of responses for all respondents: 180 per year.

Estimated number of hours per response: 1.

Estimated number of hours for all respondents: 180 per year.

Comments: Comments on this request for extension of approval of information collection requirements should be addressed to Donald Arbuckle, Desk Officer, Office of Information and Regulatory Affairs, Office of Management and Budget, Washington, D. C. 20503; telephone: (202) 395–7340. Copies of the request for extension of information collection requirements are available from Nicholas Marchica, Office of Planning and Evaluation, Consumer Product Safety Commission, Washington, D. C. 20207; telephone: (301) 504–0416.

This is not a proposal to which 44 U.S.C. 3504(h) is applicable.

Dated: June 27, 1995.

Sadye E. Dunn,

Secretary, Consumer Product Safety Commission.

[FR Doc. 95–16314 Filed 6–30–95; 8:45 am]

BILLING CODE 6355–01–P

DEPARTMENT OF DEFENSE

Office of the Secretary

Notice of Meeting

AGENCY: Defense Advisory Committee on Women in the Services (DACOWITS), DoD.

SUMMARY: Pursuant to Public Law 92–463, notice is hereby given of a forthcoming meeting of the Executive Committee of the Defense Advisory Committee on Women in the Services (DACOWITS). The purpose of the meeting is to review the current status of recommendations and requests for information generated at the 1995 Spring Conference, discuss other issues relevant to women in the Services and conduct business internal to the Committee. All meeting sessions will be open to the public.

DATES: September 18, 1995, 8:30 a.m.–4 p.m.

ADDRESSES: SecDef Conference Room 3E869, The Pentagon, Washington, DC.

FOR FURTHER INFORMATION CONTACT: Lieutenant Colonel Patricia Kersey, USAF, Office of DACOWITS and Military Women Matters, OUSD (Personnel and Readiness), The Pentagon, Room 3D769, Washington, DC 20301–4000, Telephone (703) 697–2122.

Dated: June 28, 1995.

L.M. Bynum,

Alternate OSD Federal Register Liaison Officer, Department of Defense.

[FR Doc. 95–16302 Filed 6–30–95; 8:45 am]

BILLING CODE 5000–04–M

Department of the Air Force

Intent to Grant an Exclusive Patent License

Pursuant to the provisions of Part 404 of Title 37, Code of Federal Regulations, which implements Pub. L. 96–517, the Department of the Air Force announces its intention to grant E/M Corporation, a corporation of the State of Delaware, an exclusive license under: United States Patent No. 4,828,729 filed in the name of Phillip W. Centers for ''Molybdenum Disulfide - Molybdenum Oxide Lubricants''.

The license described above will be granted unless an objection thereto, together with a request for an opportunity to be heard, if desired, is received in writing by the addressee set forth below within sixty (60) days from the date of publication of this Notice. Copies of the patent may be obtained, on request, from the same addressee.

All communications concerning this Notice should be sent to: Mr. Samuel B. Smith, Jr., Chief, Intellectual Property Branch, Commercial Litigation Division, Air Force Legal Services Agency, AFLSA/JACNP, 1501 Wilson Blvd. Suite 805, Arlington, VA 22209–2403, Telephone No. (703) 696–9050.

Patsy J. Conner,

Air Force Federal Register Liaison Officer.

[FR Doc. 95–16226 Filed 6–30–95; 8:45 am]

BILLING CODE 3910–01–P

Department of the Army

Environmental Assessment and Finding of No Significant Impact for Disposal and Reuse of the Lexington Facility of Blue Grass Army Depot

AGENCY: Department of the Army, DOD.

ACTION: Notice of Availability.

SUMMARY: In accordance with Public Law 100–526, the Defense Authorizations and Amendments and Base Closure and Realignment Act of 1988, the Defense Base Closure and Realignment Commission recommended the closure of the Lexington Facility, Blue Grass Army Depot, Lexington, Kentucky. This recommendation became law on January 5, 1989.

The environmental assessment evaluates the environmental impacts associated with the transfer of the entire facility (except for one building and its surrounding property) in phases, as any necessary remediation of buildings and land is complete, to the Commonwealth of Kentucky for light industrial and park/recreation uses similar to those for which the facility is currently being used. The facility is leased by the Commonwealth. Portions of the facility are being used by U.S. Special Operations Command (USSOCOM), the Kentucky National Guard, and the Retro Europe Mission. It is the Commonwealth's intention to permit the continued use of the facility by USSOCOM, the Kentucky National Guard, and the Retro Europe Mission and to create the setting for an industrial park of approximately 570 acres with a target goal of approximately 1,850 employees by the year 2,000. Also, the Commonwealth intends to use approximately 210 acres for park and recreational uses. Current employment levels at the Lexington Facility is approximately 640 personnel.

There would be no significant impacts in connection with the proposed action or the No Action/Caretaker alternative. Transfer to the Commonwealth of Kentucky would provide like use activities at a maximum employment level. Neither alternative would result in long-term significant direct adverse impacts on public health and safety. The proposed action of transfer/disposal would not contribute to significant cumulative impacts. Accordingly, a Finding of No Significant Impact has been prepared.

DATES: Written public comments and suggestions will be accepted by July 18, 1995.

ADDRESSES: Copies of the Environmental Assessment and Finding of No Significant Impact can be obtained by writing to the U.S. Army Engineer District, Louisville, Corps of Engineers, ATTN: CEORL–PD–R (Mr. Robert Woodyard, Chief, Environmental Analysis Branch), P.O. Box 59, Louisville, Kentucky 40201–0059 or by calling Mr. Robert Woodyard at (502) 582–5774 within 15 days of the date of the publication of this notice.

FOR FURTHER INFORMATION CONTACT: Mr. Robert Woodyard at (502) 582–5774.

Dated: June 26, 1995.

Lewis D. Walker,

Deputy Assistant Secretary of the Army, (Environment, Safety and Occupational Health) OASA (IL&E).

[FR Doc. 95–16298 Filed 6–30–95; 8:45 am]

BILLING CODE 3710–08–M

DEPARTMENT OF EDUCATION

[CFDA No. 84.031A, CFDA No. 84.031G]

Extension of Closing Date for Receipt of Applications for Designation as an Eligible Institution for Fiscal Year (FY) 1995 for the Strengthening Institutions and Endowment Challenge Grant Programs

The Department of Education published a notice in the **Federal Register** of March 13, 1995 (60 FR 13423) that established April 3, 1995 as the closing date for submission of applications to be designated as an eligible institution under the Strengthening Institutions and Endowment Challenge Grant programs for Fiscal Year 1995. The Department is reopening and extending the application period to July 14, 1995 to allow institutions that have already submitted eligibility applications to correct and clarify reported data.

For Applications or Information Contact: Strengthening Institutions Program Branch, Division of Institutional Development, U.S. Department of Education, 600 Independence Avenue, S.W., Suite 600, Portals Building, Washington, D.C. 20202–5335. Telephone: (202) 708–8839. Individuals who use a telecommunications device for the deaf (TDD) may call the Federal Information Relay Service (FIRS) at 1–800–877–8339 between 8 a.m. and 8 p.m., Eastern time, Monday through Friday.

Information about the Department's funding opportunities, including copies of application notices for discretionary grant competitions, can be viewed on the Department's electronic bulletin board (ED Board), telephone (202) 260–9950; or on the Internet Gopher Server at GOPHER.ED.GOV (under Announcements, Bulletins and Press Releases). However, the official application notice for a discretionary grant competition is the notice published in the **Federal Register**.

Program Authority: 20 U.S.C. 1057, 1059c and 1065a.

Dated: June 28, 1995.

David A. Longanecker,

Assistant Secretary for Postsecondary Education.

[FR Doc. 95–16290 Filed 6–30–95; 8:45 am]

BILLING CODE 4000–01–P

DEPARTMENT OF ENERGY

Deviations for Expedited Financial Assistance Projects

AGENCY: Department of Energy.

ACTION: Class deviations.

SUMMARY: The Department of Energy (DOE), pursuant to 10 CFR 600.4, hereby announces three deviations from its Financial Assistance Rules for an expedited financial assistance pilot program with commercial firms. The approval of these deviations ensures that the program goals and objectives are achieved and that public funds are conserved.

A process improvement team has been established to execute cost-shared projects with commercial firms using best commercial practices. The goal of this team is to test techniques for improving DOE's process for entering into cooperative agreements for research and development with commercial firms.

The three deviations have been approved because they are required to achieve program objectives. The first deviation waives the requirement for a principal program purpose determination, the second deviation will permit budget periods in excess of 12 months; and the third deviation permits DOE to withhold payments following verbal notification.

EFFECTIVE DATE: July 18, 1995.

FOR FURTHER INFORMATION CONTACT: Cynthia Yee, Office of Clearance and Support, (HR–522.2), U.S. Department of Energy, 1000 Independence Avenue, SW., Washington, DC 20585, (202) 586–1140.

SUPPLEMENTARY INFORMATION: In this notice, the DOE announces that, pursuant to 10 CFR part 600, the Deputy Assistant Secretary for Procurement and Assistance Management has made a determination of the need for three deviations to the DOE Financial Assistance Rules. The determination document, dated June 20, 1995, provides for deviations for recipients as explained below (i.e., a ''class deviation'').

Deviation Number 1 waives the requirement for execution of Principal Program Purpose Determinations required by 600.5. The program office will be represented on the process improvement team, thereby ensuring that the program is appropriate for financial assistance, and a transaction determination will be made by the Contracting Officer.

Deviation Number 2 deviates from the 12-month budget period limitation contained in 600.31(b). This deviation is necessary to permit awards to projects with budget periods in excess of 12 months, if necessary to meet project objectives.

Deviation Number 3 permits the withholding of payment for failure to meet established milestone schedules with verbal notice of failure to make progress, thereby providing adequate advance notice of non-compliance. This is a deviation to 600.122(h) and 600.28 and furthers the program objective of reducing administrative burden.

This deviation expires on September 30, 1997.

Issued in Washington, DC June 20, 1995.

Richard H. Hopf,

Deputy Assistant Secretary for Procurement and Assistance Management.

[FR Doc. 95–16296 Filed 6–30–95; 8:45 am]

BILLING CODE 6450–01–P

Financial Assistance Award: Petrosurveys, Inc.

AGENCY: Department of Energy.

ACTION: Notice of Intent.

SUMMARY: The U.S. Department of Energy announces that pursuant to 10 CFR 600.6(a)(2) it is making a financial assistance award under Grant Number DE–FG01–95CE15626 to Petrosurveys, Inc. The proposed grant will provide funding in the estimated amount of $98,178 by the Department of Energy for the purpose of locating energy sources through development of the inventor's ''System for Discovering the Locations of Sea Floor Seepages of Petroleum.''

SUPPLEMENTARY INFORMATION: The Department of Energy has determined in accordance with 10 CFR 600.14(e)(1) that the unsolicited application for financial assistance submitted by Petrosurveys, Inc., is meritorious based on the general evaluation required by 10 CFR 600.14(d) and the proposed project represents a unique idea that would not be eligible for financial assistance under a recent, current or planned solicitation. The new technology is expected to complete the prototype development of an apparatus to locate and map sea floor petroleum seepages using a ship-borne, instrumented surveying system that is an extremely cost-effective alternative to conventional exploration techniques. The technology provides a faster and cheaper way to locate oil seeps compared to seismic surveying. The applicant's exploration method will cover a greater area of the sea with an equivalent degree of accuracy than with current methods. Therefore, the technology presents a higher probability of opening up new oil fields, and thus will have a long-term beneficial effect upon the Nation's energy supply.

The inventor and principal investigator, Dr. Keith F. M. Thompson has extensive experience in petroleum geochemistry. He has written numerous journal articles and is an active member in several geochemical and geological societies. For the proposed project, Dr. Thompson will utilize the marine engineering staff and facilities of HBOI. The proposed project is not eligible for financial assistance under a recent, current or planned solicitation because the funding program, the Energy Related Invention Program (ERIP), has been structured since its beginning in 1975 to operate without competitive solicitations because the authorizing legislation directs ERIP to provide support for worthy ideas submitted by the public. The program has never issued and has no plans to issue a competitive solicitation. This award will be made 14 calendar days after publication to allow for public comment.

FOR FURTHER INFORMATION CONTACT: Please write the U.S. Department of Energy, Office of Placement and Administration, ATTN: Sara Wilson, HR–561.21, 1000 Independence Ave., S.W., Washington, D.C. 20585.

The anticipated term of the proposed grant is 18 months from the date of award.

Lynn Warner,

Contracting Officer, Office of Placement and Administration.

[FR Doc. 95–16293 Filed 6–30–95; 8:45 am]

BILLING CODE 6450–01–P

Advisory Committee on Human Radiation Experiments

AGENCY: Department of Energy.

ACTION: Notice of open meeting.

SUMMARY: Under the provisions of the Federal Advisory Committee Act (Pub. L. 92–463,86 Stat. 770), notice is hereby given of the following meeting:

DATES AND TIMES:

July 17, 1995, 9:00 a.m.–5:00 p.m.
July 18, 1995, 9:00 a.m.–5:00 p.m.
July 19, 1995, 8:30 a.m.–3:30 p.m.

PLACE: The Madison, 15th and M Streets, N.W., Washington, D.C.

FOR FURTHER INFORMATION CONTACT: Steve Klaidman, Advisory Committee on Human Radiation Experiments, 1726 M Street, NW, Suite 600, Washington, DC 20036. Telephone: (202) 254–9795 Fax: (202) 254–9828

SUPPLEMENTARY INFORMATION:

Purpose of the Committee

The Advisory Committee on Human Radiation Experiments was established by the President, Executive Order No. 12891, January 15, 1994, to provide advice and recommendations on the ethical and scientific standards applicable to human radiation experiments carried out or sponsored by the United States Government. The Advisory Committee on Human Radiation Experiments reports to the Human Radiation Interagency Working Group, the members of which include the Secretary of Energy, the Secretary of Defense, the Secretary of Health and Human Services, the Secretary of Veterans Affairs, the Attorney General, the Administrator of the National Aeronautics and Space Administration, the Director of Central Intelligence, and the Director of the Office of Management and Budget.

Tentative Agenda

Monday, July 17, 1995

9:00 a.m. Call to Order and Opening Remarks
9:05 a.m. Approval of Minutes
9:10 a.m. Public Comment
10:30 a.m. Discussion of Report Draft and Recommendations
12:00 p.m. Lunch
1:15 p.m. Discussion, Committee Strategy and Direction (continued)
5:00 p.m. Meeting Adjourned

Tuesday, July 18, 1995

9:00 a.m. Opening Remarks
9:10 a.m. Discussion of Report Draft and Recommendations
12:00 p.m. Lunch
1:15 p.m. Discussion of Report Draft and Recommendations (continued)
6:00 p.m. Meeting Adjourned

Wednesday, July 19, 1995

8:30 a.m. Opening Remarks
8:35 a.m. Discussion of Report Draft and Recommendations
12:00 p.m. Lunch
1:15 p.m. Discussion of Report Draft and Recommendations (continued)
3:30 p.m. Meeting Adjourned

A final agenda will be available at the meeting.

Public Participation

The meeting is open to the public. The chairperson is empowered to conduct the meeting in a fashion that will facilitate the orderly conduct of business. Any member of the public who wishes to file a written statement with the Advisory Committee will be permitted to do so, either before or after the meeting. Members of the public who wish to make a five-minute oral statement should contact Steve Klaidman of the Advisory Committee at the address or telephone number listed above. Requests must be received at least five business days prior to the meeting and reasonable provisions will be made to include the presentation on the agenda.

Transcript

Available for public review and copying at the office of the Advisory Committee at the address listed above between 9 a.m. and 4 p.m., Monday through Friday, except Federal holidays.

Issued at Washington, DC on June 28, 1995.

Rachel Murphy Samuel,

Acting Deputy Advisory Committee, Management Officer.

[FR Doc. 95–16292 Filed 6–30–95; 8:45 am]

BILLING CODE 6450–01–P

Federal Energy Regulatory Commission

[Docket No. EG95–58–000, et al.]

HIE Generadora S. A., et al.; Electric Rate and Corporate Regulation Filings

June 26, 1995.

Take notice that the following filings have been made with the Commission:

1. HIE Generadora S.A.

[Docket No. EG95–58–000]

On June 20, 1995, HIE Generadora S.A. (''HIE Generadora''), 611 Walker, 11th Floor, Houston, Texas 77002, filed with the Federal Energy Regulatory Commission an application for determination of exempt wholesale generator status pursuant to Part 365 of the Commission's regulations. HIE Generadora intends to participate in an international public bid to acquire ninety-eight percent (98%) of the capital stock of Hidroeléctrica Río Juramento S.A. (''Río Juramento''), an Argentine company that is owned by the Republic of Argentina and the Province of Salta. The remaining two percent (2%) of the capital stock of Río Juramento will be owned by the employees of Río Juramento. The national and provincial governments have each granted Rio Juramento thirty-year concessions to hold and operate two hydroelectric generating facilities (Cabra Corral and El Tunal) located on the Juramento river system with a combined installed electric generation capacity of approximately 112.4 megawatts.

Comment date: July 14, 1995, in accordance with Standard Paragraph E at the end of this notice. The Commission will limit its consideration of comments to those that concern the adequacy or accuracy of the application.

2. Enron Power Marketing, Inc.

[Docket No. ER94–24–008]

Take notice that on June 21, 1995, Enron Power Marketing, Inc. (Enron Power), tendered for filing an amendment to its filing in this docket as required by the Commission's December 2, 1993, order in Docket No. ER94–24–000. Copies of Enron Power's informational filing are on file with the Commission and are available for public inspection.

3. Niagara Mohawk Power Corporation

[Docket No. ER95–1219–000]

Take notice that on June 14, 1995, Niagara Mohawk Power Corporation (Niagara Mohawk), filed an amendment to its wholesale power sales tariff. The purpose of this abbreviated filing is to provide an explanation of the treatment of the cost of emission allowances.

Niagara Mohawk has served copies of the filing on the New York Public Service Commission customers authorized to receive service under the tariff and other customers.

Comment date: July 10, 1995, in accordance with Standard Paragraph E at the end of this notice.

4. Louisville Gas and Electric Company

[Docket No. ER95–1220–000]

Take notice that on June 14, 1995, Louisville Gas and Electric Company, tendered for filing a copy of a service agreement between Louisville Gas and Electric Company and Rainbow Energy Marketing Corporation under Rate GSS.

Comment date: July 10, 1995, in accordance with Standard Paragraph E at the end of this notice.

5. Louisville Gas and Electric Company

[Docket No. ER95–1221–000]

Take notice that on June 14, 1995, Louisville Gas and Electric Company, tendered for filing a copy of a service agreement between Louisville Gas and Electric Company and Dreyfus Electric Power, Inc. under Rate GSS.

Comment date: July 10, 1995, in accordance with Standard Paragraph E at the end of this notice.

6. Northern Indiana Public Service Company

[Docket No. ER95–1222–000]

Take notice that on June 14, 1995, Northern Indiana Public Service Company tendered for filing a Power Sales Tariff for Northern Indiana Public Service Company.

The Power Sales Tariff allows for General Purpose transactions and Negotiated Capacity transactions with eligible purchasers which have executed a Service Agreement. General Purpose transactions are economy based energy transactions which may be made available from Northern Indiana Public Service Company's resources from time to time. Negotiated Capacity transactions provide capacity and energy customized to the specific needs at the time of the reservation.

Copies of this filing have been sent to the Indiana Utility Regulatory Commission.

Comment date: July 10, 1995, in accordance with Standard Paragraph E at the end of this notice.

7. PECO Energy Company

[Docket No. ER95–1223–000]

Take notice that on June 15, 1995, PECO Energy Company (PECO), tendered for filing an Agreement between PECO and NUSCO Services, Incorporated (NUSCO) dated April 26, 1995.

PECO states that the Agreement sets forth the terms and conditions for the sale of system energy which it expects to have available for sale from time to time and the purchase of which will be economically advantageous to Northeast Utilities Service Company. In order to optimize the economic advantage to both PECO and NUSCO, PECO requests that the Commission waive its customary notice period and permit the agreement to become effective on June 15, 1995.

PECO states that a copy of this filing has been sent to NUSCO and will be furnished to the Pennsylvania Public Utility Commission.

Comment date: July 10, 1995, in accordance with Standard Paragraph E at the end of this notice.

8. Niagara Mohawk Power Corporation

[Docket No. ER95–1224–000]

Take notice that on June 14, 1995, Niagara Mohawk Power Corporation (NMPC), tendered for filing with the Federal Energy Regulatory Commission an executed Service Agreement between NMPC and Engelhard Power Marketing, Inc. (Engelhard). This Service Agreement specifies that Engelhard has signed on to and has agreed to the terms and conditions of NMPC's Power Sales Tariff designated as NMPC's FERC Electric Tariff, Original Volume No. 2. This Tariff, approved by FERC on April 15, 1994, and which has an effective date of March 13, 1993, will allow NMPC and Engelhard to enter into separately scheduled transactions under which NMPC will sell to Engelhard capacity and/or energy as the parties may mutually agree.

In its filing letter, NMPC also included a Certificate of Concurrence executed by the Purchaser.

NMPC requests an effective date of May 24, 1995. NMPC has requested waiver of the notice requirements for good cause shown.

NMPC has served copies of the filing upon the New York State Public Service Commission and Engelhard.

Comment date: July 10, 1995, in accordance with Standard Paragraph E at the end of this notice.

9. Niagara Mohawk Power Corporation

[Docket No. ER95–1225–000]

Take notice that on June 15, 1995, Niagara Mohawk Power Corporation (NMPC) tendered for filing with the Federal Energy Regulatory Commission an executed Service Agreement between NMPC and GPU Service Corporation (GPU). This Service Agreement specifies that GPU has signed on to and has agreed to the terms and conditions of NMPC's Power Sales Tariff designated as NMPC's FERC Electric Tariff, Original Volume No. 2. This Tariff, approved by FERC on April 15, 1994, and which has an effective date of March 13, 1993, will allow NMPC and GPU to enter into separately scheduled transactions under which NMPC will sell to GPU capacity and/or energy as the parties may mutually agree.

In its filing letter, NMPC also included a Certificate of Concurrence executed by the Purchaser.

NMPC requests an effective date of June 8, 1995. NMPC has requested waiver of the notice requirements for good cause shown.

NMPC has served copies of the filing upon the New York State Public Service Commission and GPU.

Comment date: July 10, 1995, in accordance with Standard Paragraph E at the end of this notice.

10. Niagara Mohawk Power Corporation

[Docket No. ER95–1226–000]

Take notice that on June 15, 1995, Niagara Mohawk Power Corporation (NMPC) tendered for filing with the Federal Energy Regulatory Commission an executed Service Agreement between NMPC and Rainbow Energy Marketing Corporation (Rainbow). This Service Agreement specifies that Rainbow has signed on to and has agreed to the terms and conditions of NMPC's Power Sales Tariff designated as NMPC's FERC Electric Tariff, Original Volume No. 2. This Tariff, approved by FERC on April 15, 1994, and which has an effective date of March 13, 1993, will allow NMPC and Rainbow to enter into separately scheduled transactions under which NMPC will sell to Rainbow capacity and/or energy as the parties may mutually agree.

In its filing letter, NMPC also included a Certificate of Concurrence executed by the Purchaser.

NMPC requests an effective date of June 1, 1995. NMPC has requested waiver of the notice requirements for good cause shown.

NMPC has served copies of the filing upon the New York State Public Service Commission and Rainbow.

Comment date: July 10, 1995, in accordance with Standard Paragraph E at the end of this notice.

11. Wisconsin Power and Light Company

[Docket No. ER95–1227–000]

Take notice that on June 15, 1995, Wisconsin Power and Light Company (WP&L) tendered for filing an Agreement dated May 16, 1995, establishing Kimball Power Company as a customer under the terms of WP&L's Transmission Tariff–T–2.

WP&L requests an effective date of May 16, 1995 and accordingly seeks waiver of the Commission's notice requirements. A copy of this filing has been served upon the Public Service Commission of Wisconsin.

Comment date: July 10, 1995, in accordance with Standard Paragraph E at the end of this notice.

12. Central Louisiana Electric Company

[Docket No. ER95–1229–000]

Take notice that on June 15, 1995, Central Louisiana Electric Company (CLECO) tendered for filing an executed Contract for Interchange and Unit Contingent Capacity and Associated Energy between CLECO and Noram Energy Services, Inc.

Comment date: July 10, 1995, in accordance with Standard Paragraph E at the end of this notice.

13. Niagara Mohawk Power Corporation

[Docket No. ER95–1230–000]

Take notice that on June 16, 1995, Niagara Mohawk Corporation (Niagara Mohawk) tendered for filing an

interconnection agreement between Niagara Mohawk and Medina Power Company (Medina) dated April 22, 1992 and an amendment to the interconnection agreement dated June 14, 1995.

Copies of this filing were served upon Medina and the New York State Public Service Commission.

Comment date: July 10, 1995, in accordance with Standard Paragraph E at the end of this notice.

14. Niagara Mohawk Power Corporation

[Docket No. ER95–1231–000]

Take notice that Niagara Mohawk (Niagara Mohawk) on June 16, 1995, tendered for filing an agreement between Niagara Mohawk and Selkirk Cogen Partners (Selkirk) dated June 12, 1995 providing for certain transmission services to Selkirk.

Copies of this filing were served upon Selkirk and the New York State Public Service Commission.

Comment date: July 10, 1995, in accordance with Standard Paragraph E at the end of this notice.

15. Ocean State Power Company

[Docket Nos. FA93–63–002 and FA93–70–002]

Take notice that on June 15, 1995, Ocean State Power Company tendered for filing its refund report in the above-referenced dockets.

Comment date: July 10, 1995, in accordance with Standard Paragraph E at the end of this notice.

Standard Paragraph

E. Any person desiring to be heard or to protest said filing should file a motion to intervene or protest with the Federal Energy Regulatory Commission, 825 North Capitol Street, N.E., Washington, D.C. 20426, in accordance with Rules 211 and 214 of the Commission's Rules of Practice and Procedure (18 CFR 385.211 and 18 CFR 385.214). All such motions or protests should be filed on or before the comment date. Protests will be considered by the Commission in determining the appropriate action to be taken, but will not serve to make protestants parties to the proceeding. Any person wishing to become a party must file a motion to intervene. Copies of this filing are on file with the Commission and are available for public inspection.

Lois D. Cashell,

Secretary.

[FR Doc. 95–16252 Filed 6–30–95; 8:45 am]

BILLING CODE 6717–01–P

[Docket No. ER95–132–000, et al.]

PSI Energy, Inc., et al.; Electric Rate and Corporate Regulation Filings

June 23, 1995.

Take notice that the following filings have been made with the Commission:

1. PSI Energy, Inc.

[Docket Nos. ER95–132–000; ER95–133–000]

Take notice that PSI Energy, Inc. (PSI) on June 19, 1995, tendered for filing a Notice of Withdrawal of emission allowance cost support data filed with the Federal Energy Regulatory Commission in the above referenced dockets per Interchange Agreements between PSI, Blue Ridge Power Agency and the City of Piqua, Ohio.

PSI requests the withdrawal of such cost support data because similar information was filed and is covered under PSI's filing in Docket No. ER95–501–000 for the Interchange Agreements designated respectively as PSI Rate Schedule FERC Nos. 255 and 260 by the Commission.

Copies of the filing were served on the City of Piqua, Ohio, the Public Utilities Commission of Ohio, Blue Ridge Power Agency, the Virginia State Corporation Commission and the Indiana Utility Regulatory Commission.

Comment date: July 7, 1995, in accordance with Standard Paragraph E at the end of this notice.

2. Kohler Company

[Docket No. ER95–1018–000]

Take notice that on June 14, 1995, Kohler Company tendered for filing an amendment in the above-referenced docket.

Comment date: July 7, 1995, in accordance with Standard Paragraph E at the end of this notice.

3. Jersey Central Power & Light Company, Metropolitan Edison Company, Pennsylvania Electric Company

[Docket No. ER95–1202–000]

Take notice that on June 12, 1995, GPU Service Corporation (GPU) on behalf of Jersey Central Power & Light Company, Metropolitan Edison Company and Pennsylvania Electric Company (jointly referred to as the GPU Operating Companies) tendered for filing a Service Agreement between GPU and Midcon Power Services Corporation, dated June 6, 1995.

Comment date: July 7, 1995, in accordance with Standard Paragraph E at the end of this notice.

4. Portland General Electric Company

[Docket No. ER95–1203–000]

Take notice that on June 12, 1995, Portland General Electric Company (PGE) tendered for filing a cancellation of Service Agreement No. 17 under FERC Electric Tariff, Original Volume No. 1 (PGE–1) and Service Agreement No. 38 under FERC Electric Tariff, Original Volume No. 2 (PGE–2) with Sacramento Municipal Utility District. PGE has requested that the Service Agreement cancellations be accepted by the Commission effective August 8, 1995. Copies of the filing have been served on the parties included in the Notices of Cancellation.

Comment date: July 7, 1995, in accordance with Standard Paragraph E at the end of this notice.

5. Northeast Utilities Service Company

[Docket No. ER95–1204–000]

Take notice that Northeast Utilities Service Company (NUSCO), on June 12, 1995, tendered for filing, a Service Agreement and a Certificate of Concurrence with the Citizens Utilities Company (Citizens) under the NU System Companies' System Power Sales/Exchange Tariff No. 6.

NUSCO states that a copy of this filing has been mailed to Citizens.

NUSCO requests that the Service Agreement become effective on June 12, 1995.

Comment date: July 7, 1995, in accordance with Standard Paragraph E at the end of this notice.

6. Interstate Power Company

[Docket No. ER95–1205–000]

Take notice that on June 12, 1995, Interstate Power Company (IPW) tendered for filing a Transmission Service Agreement between IPW and Rainbow Energy Marketing Corporation (Rainbow). Under the Transmission Service Agreement, IPW will provide non-firm point-to-point transmission service to Rainbow.

Comment date: July 7, 1995, in accordance with Standard Paragraph E at the end of this notice.

7. Texas-New Mexico Power Company

[Docket No. ER95–1206–000]

Take notice that on June 12, 1995, Texas-New Mexico Power Company (TNMP) tendered for filing a Pre-PST New Mexico Transmission Operating Procedure entered into by and among TNMP, El Paso Electric Company, Public Service Company of New Mexico, and Plains Electric Generation & Transmission Cooperative, Inc.

TNMP requests waiver of the Commission's notice requirements and

that such contract be made effective as of June 1, 1995.

TNMP asserts that the filing has been served on the parties to the contract and on the Texas Public Utility Commission and the New Mexico Public Utility Commission.

Comment date: July 7, 1995, in accordance with Standard Paragraph E at the end of this notice.

8. Public Service Company of Colorado

[Docket No. ER95–1207–000]

Take notice that on June 12, 1995, Public Service Company of Colorado (Public Service) tendered for filing Public Service Electric Coordination Service Tariff (Tariff). The Tariff proposes two service schedules: 1) Service Schedule A—Coordination Power and Energy; and 2) Service Schedule B—Power and Energy Exchanges.

No new or modifications to existing facilities are anticipated to be required as a result of this Tariff.

A copy of this filing has been served on the Public Utilities Commission of the State of Colorado and the Colorado Office of Consumer Counsel.

Comment date: July 7, 1995, in accordance with Standard Paragraph E at the end of this notice.

9. Pacific Gas and Electric Company

[Docket No. ER95–1208–000]

Take notice that on June 13, 1995, Pacific Gas and Electric Company (PG&E) tendered for filing: (1) an agreement dated April 12, 1995, between PG&E and the Sierra Pacific Power Company (Sierra), entitled Special Facilities Agreement for the Goldhill-Horseshoe Reconductor Project; and (2) a Corrected Service Schedule 1 to Appendix A of Rate Schedule FERC No. 72.

Copies of this filing have been served upon Sierra and the CPUC.

Comment date: July 7, 1995, in accordance with Standard Paragraph E at the end of this notice.

10. Pacific Gas and Electric Company

[Docket No. ER95–1209–000]

Take notice that on June 13, 1995, Pacific Gas and Electric Company (PG&E) tendered for filing the Rainbow Energy Marketing Corporation—PG&E Power Enabling Agreement between Rainbow Energy Marketing Corporation (REMC) and PG&E. The Enabling Agreement documents terms and conditions for the purchase, sale or exchange of economy energy and surplus capacity which the Parties agree to make available to one another at defined control area border interconnection points.

Copies of this filing have been served upon REMC and the California Public Utilities Commission.

Comment date: July 7, 1995, in accordance with Standard Paragraph E at the end of this notice.

11. Arizona Public Service Company

[Docket No. ER95–1210–000]

Take notice that on June 13, 1995, Arizona Public Service Company (APS) tendered for filing a proposed Service Schedule D to the existing Power Sale Agreement between APS and Citizens Utilities Company (Citizens). Service Schedule D addresses various terms and conditions associated with integration of existing and planned generating units owned by Citizens into those operated by APS.

The Parties request an effective date upon acceptance by the Commission.

Copies of this filing have been served on the Arizona Corporation Commission and Citizens Utilities Company.

Comment date: July 7, 1995, in accordance with Standard Paragraph E at the end of this notice.

12. Western Regional Transmission Association

[Docket No. ER95–1211–000]

Take notice that on June 12, 1995, Western Regional Transmission Association tendered for filing signature pages to the Governing Agreement executed by four additional Members of the Western Regional Transmission Association—Seattle City Light, the Phoenix Area Office of the Western Area Power Administration, Fletcher Challenge Power Generation U.S.A. Inc. and Wickland Power Services.

Comment date: July 7, 1995, in accordance with Standard Paragraph E at the end of this notice.

13. Virginia Electric and Power Company

[Docket No. ER95–1213–000]

Take notice that on June 14, 1995, Virginia Electric and Power Company (Virginia Power), tendered for filing a Service Agreement between Niagara Mohawk Power Corporation and Virginia Power, dated May 15, 1995 under the Power Sales Tariff to Eligible Purchasers dated May 27, 1994. Under the tendered Service Agreement Virginia Power agrees to provide services to Niagara Mohawk Power Corporation under the rates, terms, and conditions of the Power Sales Tariff as agreed by the parties pursuant to the terms of the applicable Service Schedules included in the Power Sales Tariff.

Copies of the filing were served upon the Virginia State Corporation Commission and the North Carolina Utilities Commission.

Comment date: July 7, 1995, in accordance with Standard Paragraph E at the end of this notice.

14. Virginia Electric and Power Company

[Docket No. ER95–1214–000]

Take notice that on June 14, 1995, Virginia Electric and Power Company (Virginia Power), tendered for filing a Service Agreement between Pennsylvania Power & Light Company and Virginia Power, dated May 15, 1995 under the Power Sales Tariff to Eligible Purchasers dated May 27, 1994. Under the tendered Service Agreement Virginia Power agrees to provide services to Pennsylvania Power & Light Company under the rates, terms, and conditions of the Power Sales Tariff as agreed by the parties pursuant to the terms of the applicable Service Schedules included in the Power Sales Tariff.

Copies of the filing were served upon the Virginia State Corporation Commission and the North Carolina Utilities Commission.

Comment date: July 7, 1995, in accordance with Standard Paragraph E at the end of this notice.

15. Virginia Electric and Power Company

[Docket No. ER95–1215–000]

Take notice that on June 14, 1995, Virginia Electric and Power Company (Virginia Power), tendered for filing a Service Agreement between CNG Power Services Corporation and Virginia Power, dated May 15, 1995 under the Power Sales Tariff to Eligible Purchasers dated May 27, 1994. Under the tendered Service Agreement Virginia Power agrees to provide services to CNG Power Services Corporation under the rates, terms and conditions of the Power Sales Tariff as agreed by the parties pursuant to the terms of the applicable Service Schedules included in the Power Sales Tariff.

Copies of the filing were served upon the Virginia State Corporation Commission and the North Carolina Utilities Commission.

Comment date: July 7, 1995, in accordance with Standard Paragraph E at the end of this notice.

16. Boston Edison Company

[Docket No. ER95–1216–000]

Take notice that on June 14, 1995, Boston Edison Company (Edison), tendered for filing a Service Agreement and Appendix A under Original Volume No. 6, Power Sales and Exchange Tariff

(Tariff) for Cambridge Electric Light Company (Cambridge). Boston Edison requests that the Service Agreement become effective as of May 22, 1995.

Edison states that it has served a copy of this filing on Cambridge and the Massachusetts Department of Public Utilities.

Comment date: July 7, 1995, in accordance with Standard Paragraph E at the end of this notice.

17. Boston Edison Company

[Docket No. ER95–1217–000]

Take notice that on June 14, 1995, Boston Edison Company (Edison), tendered for filing a Service Agreement and Appendix A under Original Volume No. 6, Power Sales and Exchange Tariff (Tariff) for Commonwealth Electric Company (Commonwealth). Boston Edison requests that the Service Agreement become effective as of May 23, 1995.

Edison states that it has served a copy of this filing on Commonwealth and the Massachusetts Department of Public Utilities.

Comment date: July 7, 1995, in accordance with Standard Paragraph E at the end of this notice.

18. Portland General Electric Company

[Docket No. ER95–1218–000]

Take notice that on June 13, 1995, Portland General Electric Company (PGE), tendered for filing a Service Agreement under FERC Electric Tariff, Original Volume No. 2 (PGE–2), with the Springfield Utility Board. PGE has requested the Service Agreement be accepted by the Commission, effective August 1, 1995. Copies of the filing have been served on the parties included in the Certificate of Service attached to the filing letter.

Comment date: July 7, 1995, in accordance with Standard Paragraph E at the end of this notice.

19. Morro Energy L.P., S.E.

[Docket No. QF95–121–000]

On June 22, 1995, Morro Energy L.P., S.E. tendered for filing an amendment to its December 28, 1994, filing in this docket.

The amendment pertains to technical requirements and the ownership structure of the small power production facility. No determination has been made that the submittal constitutes a complete filing.

Comment date: July 13, 1995, in accordance with Standard Paragraph E at the end of this notice.

Standard Paragraph

E. Any person desiring to be heard or to protest said filing should file a motion to intervene or protest with the Federal Energy Regulatory Commission, 825 North Capitol Street, N.E., Washington, D.C. 20426, in accordance with Rules 211 and 214 of the Commission's Rules of Practice and Procedure (18 CFR 385.211 and 18 CFR 385.214). All such motions or protests should be filed on or before the comment date. Protests will be considered by the Commission in determining the appropriate action to be taken, but will not serve to make protestants parties to the proceeding. Any person wishing to become a party must file a motion to intervene. Copies of this filing are on file with the Commission and are available for public inspection.

Lois D. Cashell,

Secretary.

[FR Doc. 95–16251 Filed 6–30–95; 8:45 am]

BILLING CODE 6717–01–P

Notice to Conduct Site Visit and Public/Agency Meetings

June 27, 1995.

Take notice that the following hydroelectric application has been filed with the Commission and is available for public inspection:

a. Type of Application: Original Minor License.

b. Project No.: 10873–002.

c. Date filed: January 17, 1992.

d. Applicant: Michael P. O'Brien and Robert A. Davis, III.

e. Name of Project: Cullasaja River Project.

f. Location: On the Cullasaja River, Macon County, North Carolina.

g. Filed Pursuant to: Federal Power Act 16 U.S.C. §§ 791 (a)–825(r).

h. Applicant Contact: Mr. Michael P. O'Brien, or Robert A. Davis, III, 390 Timber Laurel Lane, Lawrenceville, GA 30243, (404) 995–0891.

i. FERC Contact: Mary Golato (202) 219–2804.

j. A draft environmental assessment of the Cullasaja Project was issued on September 30, 1994.

Site Visit: A site visit for the Cullasaja River Hydroelectric Project is planned for Monday, August 7, 1995. Those who wish to attend should plan to meet at 10:00 a.m., at the top of Lake Sequoyah Dam on the Cullasaja River, (U.S. 64 West, approximately 2 miles west of downtown Highlands). Ray Johns of the Forest Service Highlands Office will be leading the tour. All participants are responsible for their own transportation. Bring a hard hat.

Scoping Meetings: Two meetings will be held. The Public Meeting is on Monday, August 7, 1995, from 7:00 to 10:00 p.m.

Location: Highlands Civic Center, Conference Room, North 4th St. Recreation Park, Highlands, NC, 28741.

The Agency Meeting is on Tuesday, August 8, 1995, at 9 a.m. until noon.

Location: Asheville Regional Office, DEHNR, Conference Room, 159 Woodfin Place, Asheville, NC 28801.

Interested individuals, organizations, and agencies with environmental expertise are invited to attend either or both meetings to discuss the environmental assessment and to assist the staff in identifying environmental issues.

Persons choosing not to speak at the meetings, but who have views on issues or information relevant to the issues, may submit written statements for inclusion in the public record at the meeting. In addition, written comments may be filed with the Secretary, Federal Energy Regulatory Commission, 825 North Capitol Street, N.E., Washington, DC, 20426, by September 7, 1995. All written correspondence should clearly show the following caption on the first page: Cullasaja River Hydroelectric Project, FERC No. 10873.

Intervenors—those on the Commission's service list for this proceeding (parties)—are reminded of the Commission's Rules of Practice and Procedure, requiring parties filing documents with the Commission, to serve a copy of the document on each person whose name appears on the official service list. Further, if a party or interceder files comments or documents with the Commission relating to the merits of an issue that may affect the responsibilities of a particular resource agency, they must also serve a copy of the document on that resource agency.

Lois D. Cashell,

Secretary.

[FR Doc. 95–16215 Filed 6–30–95; 8:45 am]

BILLING CODE 6717–01–M

[Docket No. CP95–574–000]

Columbia Gas Transmission Corporation; Notice of Request Under Blanket Authorization

June 27, 1995.

Take notice that on June 21, 1995, Columbia Gas Transmission Corporation (Columbia), P.O. Box 1273, Charleston, West Virginia 25325–1273, filed in Docket No. CP95–574–000 a request pursuant to Sections 157.205 and 157.211 of the Commission's Regulations under the Natural Gas Act for authorization to construct and operate a new point of delivery for firm

transportation service to an existing customer, under its blanket certificate issued in Docket No. CP83–76–000,[1] all as more fully set forth in the request for authorization on file with the Commission and open for public inspection.

Columbia requests authorization to establish a new point of delivery to Waterville Gas & Oil Company (WGO). Columbia will construct and operate a new delivery point for firm transportation service and will provide the service pursuant to Columbia's Blanket Certificate issued in Docket No. CP86–240–000 of the Commission's Regulations [2] under existing authorized rate schedules and within certificated entitlement, as follows:

Customer	Maximum daily quantity (Dth)	Estimated annual quantity (Dth)	Estimated construction cost ($)
WGO	250	40,000	28,000

The new point of delivery has been requested by WGO for firm transportation service for residential use. The quantities to be provided through the new delivery point are within Columbia's currently authorized level of service. The new point of delivery will be added to WGO's existing service agreement. WGO has not requested an increase in its Peak Day Entitlement in conjunction with this request for a new point of delivery. WGO has agreed to reimburse Columbia for the actual cost of the interconnection, plus any gross-up required for tax purposes.

Any person or the Commission's staff may, within 45 days after issuance of the instant notice by the Commission, file pursuant to Rule 214 of the Commission's Procedural Rules (18 CFR 385.214) a motion to intervene or notice of intervention and pursuant to Section 157.205 of the Regulations under the Natural Gas Act (18 CFR 157.205) a protest to the request. If no protest is filed within the time allowed therefor, the proposed activity shall be deemed to be authorized effective the day after the time allowed for filing a protest. If a protest is filed and not withdrawn within 30 days after the time allowed for filing a protest, the instant request shall be treated as an application for authorization pursuant to Section 7 of the Natural Gas Act.

Lois D. Cashell,

Secretary.

[FR Doc. 95–16212 Filed 6–30–95; 8:45 am]

BILLING CODE 6717–01–M

[Docket Nos. ER95–755–000, ER95–756–000, ER95–758–000, ER95–760–000]

Duke Power Company; Notice of Filing

June 27, 1995.

Take notice that on June 9, 1995, Duke Power Company (Duke) filed an amendment to its application in the above referenced dockets in response to the May 10 1995, letter from Commission Staff requesting that Duke provide additional information in support of its filing.

Any person desiring to be heard or to protest said filing should file a motion to intervene or protest with the Federal Energy Regulatory Commission, 825 North Capitol Street, N.E., Washington, D.C. 20426, in accordance with Rules 211 and 214 of the Commission's Rules of Practice and Procedure (18 CFR 385.211 and 18 CFR 385.214). All such motions or protests should be filed on or before July 11, 1995. Protests will be considered by the Commission in determining the appropriate action to be taken, but will not serve to make protestants parties to the proceeding. Any person wishing to become a party must file a motion to intervene. Copies of this filing are on file with the Commission and are available for public inspection.

Lois D. Cashell,

Secretary.

[FR Doc. 95–16213 Filed 6–30–95; 8:45 am]

BILLING CODE 6717–01–M

[Docket No. ER94–1078–000]

Southwestern Electric Power Company; Notice of Filing

June 27, 1995.

Take notice that on June 1, 1995, Southwestern Electric Power Company tendered for filing an amendment in the above-referenced docket.

Any person desiring to be heard or to protest said filing should file a motion to intervene or protest with the Federal Energy Regulatory Commission, 825 North Capitol Street, N.E., Washington, D.C. 20426, in accordance with Rules 211 and 214 of the Commission's Rules of Practice and Procedure (18 CFR 385.211 and 18 CFR 385.214). All such motions or protests should be filed on or before July 11, 1995. Protests will be considered by the Commission in determining the appropriate action to be taken, but will not serve to make protestants parties to the proceeding. Any person wishing to become a party must file a motion to intervene. Copies of this filing are on file with the Commission and are available for public inspection.

Lois D. Cashell,

Secretary

[FR Doc. 95–16214 Filed 6–30–95; 8:45 am]

BILLING CODE 6717–01–M

ENVIRONMENTAL PROTECTION AGENCY

[FRL–5252–4]

Agency Information Collection Activities Under OMB Review

AGENCY: Environmental Protection Agency (EPA).

ACTION: Notice.

SUMMARY: In compliance with the Paperwork Reduction Act (44 U.S.C. 3501 *et seq.*), this notice announces that the Information Collection Request (ICR) abstracted below has been forwarded to the Office of Management and Budget (OMB) for review and comment. The ICR describes the nature of the information collection and its expected cost and burden.

DATES: Comments must be submitted on or before August 2, 1995.

FOR FURTHER INFORMATION OR A COPY OF THIS ICR CONTACT: Sandy Farmer at EPA, (202) 260–2740, please refer to EPA ICR #1442.09.

SUPPLEMENTARY INFORMATION:

Office of Solid Waste and Emergency Response

Title: Land Disposal Restrictions (ICR No. 1442.09). This is a renewal and approved collection (OMB No. 2050–0085).

Abstract: This ICR is a comprehensive presentation of the information

[1] *See*, 22 FERC ¶62,029 (1983).

[2] *See*, 34 FERC ¶62,454 (1986).

requirements at 40 CFR part 268 that affect generators and treatment, storage, and disposal facilities (TSDFs) regulated under the Resource Conservation and Recovery Act (RCRA) of 1976, as amended by the Hazardous and Solid Waste Amendments (HSWA) of 1984. Information collection requirements include preparing information and reporting to the EPA data on waste analysis, notifications and certifications, as well as recordkeeping requirements. Where it applies, respondents must also provide data required to petition the Agency for statutory variances and for exemptions. The EPA uses these data to ensure the proper land disposal of hazardous wastes.

Burden Statement: The estimated average public reporting burden for this collection ranges from 4 hours to 20 hours per response. This estimate includes all aspects of the information collection including the time for reviewing instructions, searching existing data sources, gathering and maintaining the data needed, and completing and reviewing the collection of information.

Respondents: Generators and treatment, storage and disposal facilities.

Estimated Number of Respondents: 224,886.

Estimated Number of Responses per Respondent: Varies.

Estimated Total Annual Burden on Respondents: 3,513,342 hours.

Frequency of Collection: On occasion.

Send comments regarding the burden estimate, or any other aspect of this collection of information, including suggestions for reducing the burden, (please refer to EPA ICR #1442.09 and OMB #2050–0085) to:

Sandy, Farmer, EPA ICR #1442.09, U.S. Environmental Protection Agency, Information Policy Branch (2136), 401 M Street, SW., Washington, DC 20460
and
Jonathan Gledhill, OMB #2050–0085, Office of Management and Budget, Office of Information and Regulatory Affairs, 725 17th St., NW., Washington, DC 20503

Dated: June 27, 1995.

Joseph Retzer,

Director, Regulatory Information Division.

[FR Doc. 95–16278 Filed 6–30–95; 8:45 am]

BILLING CODE 6560–50–M

[FRL–5252–5]

Agency Information Collection Activities Under OMB Review

AGENCY: Environmental Protection Agency (EPA).

ACTION: Notice.

SUMMARY: In compliance with the Paperwork Reduction Act (44 U.S.C. 3501 *et seq.*), this notice announces that the Information Collection Request (ICR) abstracted below has been forwarded to the Office of Management and Budget (OMB) for review and comment. The ICR describes the nature of the information collection and its expected cost and burden.

DATES: Comments must be submitted on or before August 2, 1995.

FOR FURTHER INFORMATION OR A COPY CALL: Sandy Farmer at EPA (202) 260–2740, please refer to EPA ICR #1246.05.

SUPPLEMENTARY INFORMATION:

Office of Prevention, Pesticides and Toxic Substances

Title: Reporting and Recordkeeping for Asbestos Abatement Worker Protection. (EPA ICR No. 1246.05; OMB No. 2070–0072). This is for an extension of a currently approved collection.

Abstract: This rule covers state and local government employees who perform asbestos abatement activities. Employers are required to inform EPA of asbestos abatement projects, to train employees about the hazards of asbestos, to monitor employee exposure, to provide medical surveillance, and to keep records of all these activities. The records maintained provide EPA with the data necessary to ensure compliance with the worker protection rule authorized under sections 6 and 8(a) of the Toxic Substances Control Act (TSCA).

Burden Statement: The public reporting burden for this collection of information is estimated to average 22 hours per response for reporting, and 1 hour for recordkeeping. This includes the time for reviewing instructions, gathering and maintaining the data needed, and reviewing the collection of information.

Respondents: State and local governments.

Estimated No. of Respondents: 2080.

Estimated No. of Responses per Respondent: 1.

Estimated Total Annual Burden on Respondents: 47,100.

Frequency of Collection: On occasion.

Send comments regarding the burden estimate, or any other aspect of the information collection, including suggestions for reducing the burden, (please refer to EPA ICR #1246.05 and OMB #2070–0072) to:

Sandy Farmer, EPA ICR #1246.05, U.S. Environmental Protection Agency, Regulatory Information Division (2136), 401 M Street, SW., Washington, DC 20460.
and
Tim Hunt, OMB #2070–0072, Office of Management and Budget, Office of Information and Regulatory Affairs, 725 17th Street, NW., Washington, DC 20503.

Dated: June 27, 1995.

Joseph Retzer,

Director, Regulatory Information Division.

[FR Doc. 95–16279 Filed 6–30–95; 8:45 am]

BILLING CODE 6560–50–M

[FRL–5252–6]

Science Advisory Board; Executive Committee Teleconference, July 17, 1995; Executive Committee Meeting, July 25–26, 1995

Pursuant to the Federal Advisory Committee Act, Public Law 92–463, notice is hereby given that the Science Advisory Board's (SAB's) Executive Committee will conduct a public teleconference and a public meeting.

Executive Committee Teleconference

The teleconference meeting will be held on July 17, 1995 from 1:00 and 3:00 pm Eastern Daylight Time. The meeting will be coordinated through a conference call connection (Room location TBA) at the U.S. Environmental Protection Agency, 401 M Street, SW, Washington, DC 20460. Instructions about how to participate in the conference call can be obtained by calling Ms. Betty Fortune at (202) 260–4126 by July 10, 1995.

This teleconference meeting of the Executive Committee is a part of a continuing effort to facilitate the overall production of SAB reports. The draft reports expected for final review at this meeting are given below. However, this list is subject to change in the event final edits cannot be completed in time to allow adequate pre-meeting consideration by the Committee.

a. Environmental Engineering Committee [Two reports: Review of the Use Cluster Scoring System (UCSS) and Review of the Leachate Migration Model]

b. Drinking Water Committee [One advisory: Advisory on Disinfection and Disinfection By-Products Research Program].

Executive Committee Meeting

The meeting will be held on Tuesday and Wednesday, July 25–26, 1995 in the Administrator's Conference Room, Room 1103—West Tower, U.S. Environmental Protection Agency, 401 M Street SW, Washington, DC 20460. The meeting will begin at 8:30 a.m. and adjourn not later than 5:00 p.m. on each

day. The meeting is open to the public, however, seating is limited and available on a first come basis.

At this meeting, the Executive Committee will receive updates from its standing committees and *ad hoc* subcommittees concerning their recent and planned activities. As part of these updates, some committees will present draft reports for Executive Committee review and approval. The drafts expected for final review at this Executive Committee meeting are given below. However, this list is subject to change in the event final edits cannot be completed in time to allow adequate pre-meeting review time. Please confirm final availability with the SAB Staff office prior to the meeting. Expected drafts include:

a. Ecological Processes and effects Committee [Three reports: Review of Bioaccumulation Factor Methodology (A joint reports with the Drinking Water Committee); Review of Methodology for Developing Sediment Quality Criteria for Metal Contaminants; Review of Acid Deposition Standard Feasibility Study];

b. Environmental Engineering Committee [Two reports: Review of Agency's Environmental Technology Innovation, Commercialization, and Enhancement (EnTICE) program; Review of Hazardous Air Pollutants/ Continuous Emissions Monitoring Systems (HAPs/CEMS)];

c. Environmental Health/Indoor Air Quality and Total Human Exposure Committee Joint Panel [One report: Review of the Agency's Dioxin Risk Assessment];

d. Radiation Advisory Committee [One report: Review of Radiation Clean Up Standards];

Additional topics on the agenda include a discussion of:

a. SAB membership issues.

b. SAB projects and processes for FY96, including serving as a ''lookout panel'' the process of completing SAB reviews,

c. the issue of hazard identification/ hazard characterization.

The group expects the following guests to meet with them for discussion:

a. the Deputy Administrator of the Agency, Mr. Fred Hansen,

b. the Assistant Administrator for Policy, Planning and Evaluation, Mr. David Gardiner to discuss the Agency's Environmental Goals Project

c. A representative of the Food and Drug Administration's Science Board to explore opportunities for future cooperation with the SAB.

d. A representative of National Academy of Public Administration's (NAPA) to discuss their report Setting Priorities, Getting Results: A New Direction for EPA.

For Further Information

Any member of the public wishing further information concerning either meeting or who wishes to submit comments should contact Dr. Donald G. Barnes, Designated Federal Official for the Executive Committee, Science Advisory Board (1400), U.S. EPA, Washington, DC 20460, phone (202) 260–4126; fax (202) 260–9232; or via The INTERNET at: barnes.don@epamail.epa.gov. Copies of the draft meeting Agendas and available draft reports listed above can be obtained from Ms. Betty Fortune at the above phone and fax numbers.

Dated: June 26, 1995.

A. Robert Flaak,

Acting Staff Director, Science Advisory Board.

[FR Doc. 95–16281 Filed 6–30–95; 8:45 am]

BILLING CODE 6560–50–M

[OPPTS–44619; FRL–4961–6]

TSCA Chemical Testing; Receipt of Test Data

AGENCY: Environmental Protection Agency (EPA).

ACTION: Notice.

SUMMARY: This notice announces the receipt of test data on refractory ceramic fibers (RCFs) (CAS No. 142844–00–6), submitted pursuant to a testing consent order under the Toxic Substances Control Act (TSCA). Publication of this notice is in compliance with section 4(d) of TSCA.

FOR FURTHER INFORMATION CONTACT: Susan B. Hazen, Director, Environmental Assistance Division (7408), Office of Pollution Prevention and Toxics, Environmental Protection Agency, Rm. E–541A, 401 M St., SW., Washington, DC 20460, (202) 554–1404, TDD (202) 554–0551; e-mail: TSCA-Hotline@epamail.epa.gov.

SUPPLEMENTARY INFORMATION: Section 4(d) of TSCA requires EPA to publish a notice in the **Federal Register** reporting the receipt of test data submitted pursuant to test rules promulgated under section 4(a) within 15 days after it is received. Under 40 CFR 790.60, all results of testing conducted pursuant to a consent order must be announced to the public in accordance with the procedures specified in section 4(d) of TSCA.

I. Test Data Submissions

Test data for refractory ceramic fibers were submitted by three member companies of the Refractory Ceramic Fiber Coalition (Carborundum Company, Premier Refractories and Chemicals, Incorporated, and Thermal Ceramics, Incorporated) pursuant to a testing consent order at 40 CFR 799.5000. They were received by EPA on June 21, 1995. The submission describes workplace exposure monitoring data from RCFC company facilities, as well as from their customers' facilities. The customers selected include those chosen at random and those who specifically requested monitoring. Air monitoring samples were collected from employees engaged in RCF fiber production and processing, or use in functional categories such as forming, finishing, and installation.

RCFs are used as insulation for industrial insulation applications such as high temperature furnaces, heaters, and kilns. RCFs are also used in automotive applications, aerospace uses, and in certain commercial appliances such as self-cleaning ovens.

EPA has initiated its review and evaluation process for these data submissions. At this time, the Agency is unable to provide any determination as to the completeness of the submissions.

II. Public Record

EPA has established a public record for this TSCA section 4(d) receipt of data notice (docket number OPPTS–44619). This record includes copies of all data reported in this notice. The record is available for inspection from 12 noon to 4 p.m., Monday through Friday, except legal holidays, in the TSCA Nonconfidential Information Center (NCIC) (also known as the TSCA Public Docket Office), Rm. NE–B607, 401 M St., SW., Washington, DC 20460.

Authority: 15 U.S.C. 2603.

List of Subjects

Environmental protection, Test data.

Dated: June 26, 1995.

William H. Sanders III,

Director, Office of Pollution Prevention and Toxics.

[FR Doc. 95–16274 Filed 6–30–95; 8:45 am]

BILLING CODE 6560–50–F

FEDERAL COMMUNICATIONS COMMISSION

Public Information Collection Approved by Office of Management and Budget

June 27, 1995.

The Federal Communications Commission (FCC) has received Office

of Management and Budget (OMB) approval for the following public information collection pursuant to the Paperwork Reduction Act of 1980, Pub. L. 96–511. For further information contact Shoko B. Hair, Federal Communications Commission, (202) 418–1379.

Federal Communications Commission

OMB Control No.: 3060–0168.

Expiration Date: 10/31/96.

Title: Section 43.43 - Report of Proposed Changes in Depreciation Rates.

Estimated Annual Burden: 67,500 total annual hours; 5625 hours per response.

Description: In the *Report and Order* in CC Docket No. 92–296 (released 10/20/93), the Commission streamlined its depreciation prescription process for local exchange carriers (LECs) regulated under its price cap regulatory scheme by adopting a modified form of the basic factor range option. The *Second Report and Order* (released 6/28/94) adopted the initial set of accounts and ranges for the price caps LECs. The *Third Report and Order* adopts ranges and alternate simplified procedures for the remaining accounts and completes the implementation process. The Commission has modified its information collection requirements whereby large LECs must submit analyses on proposed changes in depreciation rates. The information will be used by the Commission staff to establish proper depreciation rates to be charged by the carriers pursuant to Section 220(b) of the Communications Act, as amended, 47 U.S.C. Section 220(b).

Federal Communications Commission.

William F. Caton,

Acting Secretary.

[FR Doc. 95–16246 Filed 6–30–95; 8:45 am]

BILLING CODE 6712–01–F

FEDERAL EMERGENCY MANAGEMENT AGENCY

[FEMA–1050–DR]

North Dakota; Amendment to Notice of a Major Disaster Declaration

AGENCY: Federal Emergency Management Agency (FEMA).

ACTION: Notice.

SUMMARY: This notice amends the notice of a major disaster for the State of North Dakota, (FEMA–1050–DR), dated May 16, 1995, and related determinations.

EFFECTIVE DATE: June 26, 1995.

FOR FURTHER INFORMATION CONTACT: Pauline C. Campbell, Response and Recovery Directorate, Federal Emergency Management Agency, Washington, DC 20472, (202) 646–3606.

SUPPLEMENTARY INFORMATION: The notice of a major disaster for the State of North Dakota dated May 16, 1995, is hereby amended to include the following areas among those areas determined to have been adversely affected by the catastrophe declared a major disaster by the President in his declaration of May 16, 1995:

The counties of Emmons, Renville and Sargent for Disaster Unemployment Assistance under the Individual Assistance Program. (Already designated for Public Assistance.)

(Catalog of Federal Domestic Assistance No. 83.516, Disaster Assistance.)

Richard W. Krimm,

Associate Director, Response and Recovery Directorate.

[FR Doc. 95–16291 Filed 6–30–95; 8:45 am]

BILLING CODE 6718–02–M

[FEMA–1058–DR]

Oklahoma; Major Disaster and Related Determinations

AGENCY: Federal Emergency Management Agency (FEMA).

ACTION: Notice.

SUMMARY: This is a notice of the Presidential declaration of a major disaster for the State of Oklahoma (FEMA–1058–DR), dated June 26, 1995, and related determinations.

EFFECTIVE DATE: June 26, 1995.

FOR FURTHER INFORMATION CONTACT: Pauline C. Campbell, Response and Recovery Directorate, Federal Emergency Management Agency, Washington, DC 20472, (202) 646–3606.

SUPPLEMENTARY INFORMATION: Notice is hereby given that, in a letter dated June 26, 1995, the President declared a major disaster under the authority of the Robert T. Stafford Disaster Relief and Emergency Assistance Act (42 U.S.C. 5121 *et seq.*), as follows:

I have determined that the damage in certain areas of the State of Oklahoma, resulting from severe storms, flooding and tornadoes beginning on May 26, 1995, and continuing, is of sufficient severity and magnitude to warrant a major disaster declaration under the Robert T. Stafford Disaster Relief and Emergency Assistance Act (''the Stafford Act''). I, therefore, declare that such a major disaster exists in the State of Oklahoma.

In order to provide Federal assistance, you are hereby authorized to allocate from funds available for these purposes, such amounts as you find necessary for Federal disaster assistance and administrative expenses.

You are authorized to provide Public Assistance in the designated areas. Individual Assistance and/or Hazard Mitigation Assistance may be provided at later date if warranted. Consistent with the requirement that Federal assistance be supplemental, any Federal funds provided under the Stafford Act for Public Assistance or Hazard Mitigation Assistance will be limited to 75 percent of the total eligible costs.

The time period prescribed for the implementation of section 310(a), Priority to Certain Applications for Public Facility and Public Housing Assistance, 42 U.S.C. 5153, shall be for a period not to exceed six months after the date of this declaration.

Notice is hereby given that pursuant to the authority vested in the Director of the Federal Emergency Management Agency under Executive Order 12148, I hereby appoint Joseph Picciano of the Federal Emergency Management Agency to act as the Federal Coordinating Officer for this declared disaster.

I do hereby determine the following areas of the State of Oklahoma to have been affected adversely by this declared major disaster:

The counties of Beckham, Caddo, Creek, Grady, Harmon, Jackson, Kiowa, Lincoln, Logan and Tillman for Public Assistance.

(Catalog of Federal Domestic Assistance No. 83.516, Disaster Assistance.)

James L. Witt,

Director.

[FR Doc. 95–16289 Filed 6–30–95; 8:45 am]

BILLING CODE 6718–02–M

FEDERAL TRADE COMMISSION

Granting of Request for Early Termination of the Waiting Period Under the Premerger Notification Rules

Section 7A of the Clayton Act, 15 U.S.C. 18a, as added by Title II of the Hart-Scott-Rodino Antitrust Improvements Act of 1976, requires persons contemplating certain mergers or acquisitions to give the Federal Trade Commission and the Assistant Attorney General advance notice and to wait designated periods before consummation of such plans. Section 7A(b)(2) of the Act permits the agencies, in individual cases, to terminate this waiting period prior to its expiration and requires that notice of this action be published in the **Federal Register**.

The following transactions were granted early termination of the waiting period provided by law and the premerger notification rules. The grants were made by the Federal Trade Commission and the Assistant Attorney

General for the Antitrust Division of the Department of Justice. Neither agency intends to take any action with respect to these proposed acquisitions during the applicable waiting period.

TRANSACTIONS GRANTED EARLY TERMINATION BETWEEN: 060595 AND 061695

Name of acquiring person, Name of acquired person, Name of acquired entity	PMN No.	Date terminated
Heyman Holdings Associates Limited Partnership, Conseco, Inc., Bankers Life Holding Co	95–1686	06/06/95
Wet Seal Inc., Harcourt General, Inc., Contempo Casuals	95–1696	06/06/95
Gerald W. Schwartz, John Labatt Limited, John Labatt Limited	95–1714	06/06/95
National Gypsum Company, NGC Settlement Trust, The Austin Company	95–1719	06/06/95
K/B Opportunity Fund II, L.P., Walter E. Hartman and Sally Jean Hartman, Main Street Retail and Sally Plaza Limited Partnership	95–1723	06/06/95
Carmike Cinemas, Inc., Cineplex Odeon Corp., Plitt Theatres, Inc. & Plitt Southern Theatres, Inc	95–1734	06/06/95
Computer Integration Corp., Jamal and Tamara Khatib, Cedar Computer Center, Inc	95–1737	06/06/95
Harbour Group Investments III, L.P., R.A. Parrish, Speeflo Manufacturing Corporation	95–1742	06/06/95
CENFED Financial Corporation, Government Funding CA Business & Ind. Dev. Corp., Government Funding CA Business & Ind. Dev. Corp	95–1743	06/06/95
Tech-Sym Corporation, CogniSeis Development, Inc., CogniSeis Development, Inc	95–1750	06/06/95
Liebherr-International AG, WIlliam S. Davis, Wiseda, Ltd	95–1751	06/06/95
Cookson Group plc, Jeffrey R. Mooris, Hi-Tech Ceramics, Inc	95–1752	06/06/95
Medaphis Corporation, Healthcare Recoveries, Inc., Healthcare Recoveries, Inc	95–1753	06/06/95
Living Centers of America, Inc., Rehability Corporation, Rehability Corporation	95–1759	06/06/95
Oakwood Homes Corporation, Destiny Industries, Inc., Destiny Industries, Inc	95–1763	06/06/95
Maxxim Medical, Inc., Becton, Dickinson and Company, Becton, Dickinson and Company	95–1771	06/06/95
Bank of Boston Corporation, Cencor, Inc., Century Acceptance Corporation (15 Subsidiaries)	95–1775	06/06/95
Medi-Mail, Inc., Rush-Presbyterian-St. Luke's Medical Center, Home Pharmacy, Inc	95–1777	06/06/95
Craig O McCaw, NEXTEL Communications, Inc., NEXTEL Communications, Inc	95–1779	06/06/95
Frontier Corporation, Donald Schneider, Schneider Communications, Inc	95–1780	06/06/95
Tele-Communications, Inc., TW Holdings, L.L.C. (Joint Venture), TW Holdings, L.L.C. (Joint Venture)	95–1783	06/06/95
US West, Inc., TW Holdings, L.L.C. (Joint Venture), TW Holdings, L.L.C. (Joint Venture)	95–1784	06/06/95
Empire of Carolina, Inc., SLM International, Inc., Buddy L. Inc. & Buddy L (Hong Kong) Limited	95–1788	06/06/95
Dennis R. Washington, Fletcher Challenge Limited, a New Zealand company, Norsk Pacific Steamship Company, Limited, a Bahamian Co	95–1789	06/06/95
Libbey Inc., Louis J. Appell Residuary Trust, Pfaltzgraff, Pfaltzgraff Outlet Company	95–1790	06/06/95
Warren A. Hood, Jr., International Paper Company, MkEwen Lumber Company	95–1791	06/06/95
Omnicare, Inc., Gary W. Kadlec, Specialized Pharmacy Services, Inc	95–1795	06/06/95
Kelso Investment Associates V, L.P., BankAmerica Corporation, Humphreys Inc	95–1797	06/06/95
F. Holmes Lamoreux, DynCorp, DynAir Tech of Arizona, Inc	95–1813	06/06/95
Pacific Telesis Group, Cross Country Wireless Inc., Cross Country Wireless Inc	95–1673	06/07/95
Pacific Telesis Group, George Ring, Cross Country Telecommunications, Inc	95–1674	06/07/95
Pacific Telesis Group, Vincent Tese, Cross Country Telecommunications, Inc	95–1675	06/07/95
Bennett S. LeBow, New Valley Corporation, New Valley Corporation	95–1727	06/07/95
People's Choice TV Corp., Eastern Cable Networks Corp., Eastern Cable Networks of Michigan, Inc	95–1740	06/07/95
Eastern Cable Networks Corp., People's Choice TV Corp., People's Choice TV Corp	95–1741	06/07/95
Wheaton Franciscan Services, Inc., Felician Health Care, Inc., St. Francis Hospital, Inc	95–1781	06/07/95
Felician Health Care, Inc., Wheaton Franciscan Services, Inc., Covenant Healthcare System, Inc	95–1782	06/07/95
Massachusetts Mutual Life Insurance Company, David L. Babson and Company Incorporated, David L. Babson and Company Incorporated	95–1805	06/07/95
Continental Cablevision, Inc., Consolidated Cablevision of California, Consolidated Cablevision of California	95–1711	06/09/95
Shamrock Holdings, Inc., Koor Industries Ltd., Koor Industries Ltd	95–1755	06/09/95
Columbia/HCA Helathcare Corporation, Alleghany Regional Hospital Corporation, Alleghany Regional Hospital Corporation	95–1760	06/09/95
Rieter Holding AG, Gould/Globe Limited Liability Company, Globe Acquisition Corporation	95–1766	06/09/95
Legardere Groupe S.C.A., K–III Communications Corporation, K–III Magazine Corporation	95–1769	06/09/95
Ronald O. Perelman, K–III Communications Corporation, K–III Magazine Corporation	95–1770	06/09/95
MMH Corp., Rockville Area Health Services, Inc., Rockville Area Health Services, Inc	95–1772	06/09/95
Citrus Valley Health Partners, Inc., Foothill Hospital—Morris L. Johnston Memorial, Foothill Hospital—Morris L. Johnston Memorial	95–1778	06/09/95
Jon M. Huntsman, Nova Corporation, Novacor Chemicals, Inc	95–1785	06/09/95
Institute Sisters of Mercy-Americas/Regional St. Louis, St. Anthony's Medical Center, St. Anthony's Medical Center	95–1792	06/09/95
Institute Sisters of Mercy-Americas/Regional St. Louis, St. Luke's Health Corporation, St. Luke's Health Corporation	95–1793	06/09/95
Westinghouse Electric Corp., VECTRA Technologies, Inc., VECTRA Services, Inc	95–1804	06/09/95
CUC International Inc., Irving Siegel, GETKO Group Inc	95–1808	06/09/95
Irving Siegel, CUC International Inc., CUC International Inc	95–1809	06/09/95
General Electric Company, Koor Industries Ltd., Koor Industries Ltd	95–1814	06/09/95
Silicon Graphics, Inc., Wavefront Technologies, Inc., Wavefront Technologies, Inc	95–1164	06/12/95
Silicon Graphics, Inc., Alias Research Inc., Alias Research Inc	95–1168	06/12/95
Sodexho S.A., Corrections Corporation of America, Corrections Corporation of America	95–1773	06/12/95
Emerson Electric Co., Peter R. Furniss, Computer Process Controls, Inc	95–1806	06/12/95
Gemplus SCA, World Card International GmbH, DataCard Plastics, Inc. and DataCard Bureau, Inc	95–1810	06/12/95
The Procter & Gamble Company, TheraTech, Inc., TheraTech, Inc	95–1811	06/12/95

TRANSACTIONS GRANTED EARLY TERMINATION BETWEEN: 060595 AND 061695—Continued

Name of acquiring person, Name of acquired person, Name of acquired entity	PMN No.	Date terminated
Mobil Corporation, Enserch Corporation, Garden Banks 388 Unit	95–1816	06/12/95
Stewart A. Resnick and Lynda Rae Resnick, Unilever N.V., NEWCO, A California Limited Liability Company	95–1817	06/12/95
NationsBank Corporation, Japan Leasing (U.S.A.), Inc. NNW Utility Funding I, Inc./NNW Utility Funding II, Inc	95–1818	06/12/95
John W. Kluge, Roadmaster Industries, Inc., Roadmaster Industries, Inc	95–1820	06/12/95
John W. Kluge, The Actava Group Inc., The Actava Group Inc	95–1821	06/12/95
Tri-State Generation and Transmission Association, Inc., Ronald W. Cantwell, Century Power Corporation	95–1824	06/12/95
Golder, Thoma, Cressey Fund III Limited Partnership, Cutler-Williams Incorporated, Cutler-Williams Incorporated	95–1825	06/12/95
Comdata Holdings Corporation, Wm. B Reily & Company, Inc., Fleetman, Inc. d/b/a Fuelman	95–1826	06/12/95
Federal Express Corporation, AMR Corporation, American Airlines, Inc	95–1830	06/12/95
CGW Southeast Partners I, L.P., Gargour Holdings S.A., Monarch Tile, Inc	95–1831	06/12/95
Sanyo Electric Co., Ltd., Integrated Health Services, Inc., Integrated Health Services, Inc	95–1832	06/12/95
The Commerce Group, Inc., Atlantis Plastics, Inc., Western Pioneer Insurance Company	95–1833	06/12/95
Seacor Holdings, Inc., John E. Graham & Sons, John E. Graham & Sons	95–1836	06/12/95
Berkshire Hathaway, Inc., William H. Child, R.C. Willey Home Furnishings	95–1838	06/12/95
First Financial Management Corporation, Employee Benefit Plans, Inc., Employee Benefit Plans, Inc	95–1839	06/12/95
AEW Partners, L.P., Troy Hospitality Suite Corporation, Troy Hospitality Suite Corporation	95–1840	06/12/95
Host Marriott Corporation, National Property Investors, Inc., San Antonio Riverwalk Marriott Hotel	95–1845	06/12/95
HIG Investment Group, L.P., Mr. Louis Ligator, IPM Group, Ltd., Stock & Hybritex Automotive Assets	95–1846	06/12/95
Malik M. Hasan, M.D., Blue Cros of California, Blue Cross of California	95–1744	06/13/95
Blue Cross of California, Health Systems International, Inc., Health Systems International, Inc	95–1747	06/13/95
Mahendra Parekh, J.M. Huber Corporation, Engineered Carbons Division of J.M. Huber Corporation	95–1762	06/13/95
China Synthetic Rubber Corporation, Witco Corporation, Continental Carbon Company	95–1800	06/13/95
London Merchant Securities plc, Time Warner Inc., Six Flags Entertainment Corporation	95–1861	06/13/95
Consolidated Papers, Inc., Pentair, Inc., Niagara of Wisconsin Paper Corporation (“Niagara”)	95–1691	06/14/95
Consolidated Papers, Inc., Minnesota Power & Light Company, Minnesota Paper, Incorporated (“Minnesota Paper”)	95–1692	06/14/95
Marcus Cable Company, L.P., Estate of Charles A. Sammons, Sammons Communications, Inc	95–1716	06/14/95
Marmon Holdings, Inc., DATEQ Information Network, Inc., DATEQ Information Network, Inc	95–1822	06/14/95
H. Wayne Huizenga, Republic Waste Industries, Inc., Republic Waste Industries, Inc	95–1848	06/14/95
Republic Waste Industries, Inc., Harris W. and Bonnie J. Hudson, Hudson Management Corporation and Envirocycle, Inc	95–1849	06/14/95
Harris W. and Bonnie J. Hudson, Republic Waste Industries, Inc., Republic Waste Industries, Inc	95–1850	06/14/95
Scapa Group plc, Coating Sciences, Inc., Coating Sciences, Inc	95–1852	06/14/95
AT&T Corp., AT&T Corp., Colorado High Country Cellular L.P.	95–1815	06/15/95
Christiana Companies, Inc., Energy Ventures, Inc., Energy Ventures, Inc	95–1757	06/16/95
Energy Ventures, Inc., Christiana Companies, Inc., Prideco, Inc	95–1758	06/16/95
Four Rivers Transportation, Inc., EXOR Group SA, Rail Holdings, Inc	95–1875	06/16/95

FOR FURTHER INFORMATION CONTACT: Sandra M. Peay or Renee A. Horton, Contact Representatives, Federal Trade Commission, Premerger Notification Office, Bureau of Competition, Room 303, Washington, DC 20580, (202) 326–3100.

By direction of the Commission.

Donald S. Clark,

Secretary.

[FR Doc. 95–16258 Filed 6–30–95; 8:45 am]

BILLING CODE 6750–01–M

[File No. 942–3134]

Arizona Institute of Reproductive Medicine, Ltd., et al.; Proposed Consent Agreement With Analysis to Aid Public Comment

AGENCY: Federal Trade Commission.

ACTION: Proposed consent agreement.

SUMMARY: In settlement of alleged violations of federal law prohibiting unfair acts and practices and unfair methods of competition, this consent agreement, accepted subject to final Commission approval, would prohibit, among other things, a Phoenix, Arizona based company and its president from misrepresenting the success rate of their in vitro fertilization program or any other infertility treatment services. In addition, it would require the institute and its president to possess competent and reliable scientific evidence for any future comparative success-rate claims for fertility services.

DATES: Comments must be received on or before September 1, 1995.

ADDRESSES: Comments should be directed to: FTC/Office of the Secretary, Room 159, 6th St. and Pa. Ave., NW., Washington DC 20580.

FOR FURTHER INFORMATION CONTACT: Michael Katz or Matthew Daynard, FTC/H–200, Washington, DC 20580. (202) 326–3123 or (202) 326–3291.

SUPPLEMENTARY INFORMATION: Pursuant to Section 6(f) of the Federal Trade Commission Act, 38 Stat. 721, 15 U.S.C. 46 and § 2.34 of the Commission’s rules of practice (16 CFR 2.34), notice is hereby given that the following consent agreement containing a consent order to cease and desist, having been filed with and accepted, subject to final approval, by the Commission, has been placed on the public record for a period of sixty (60) days. Public comment is invited. Such comments or views will be considered by the Commission and will be available for inspection and copying at its principal office in accordance with § 4.9(b)(6)(ii) of the Commission’s rules of practice (16 CFR 4.9(b)(6)(ii)).

Agreement Containing Consent Order to Cease and Desist

In the Matter of: Arizona Institute of Reproductive Medicine, Ltd., a limited corporation, and Robert H. Tamis, M.D., individually and as president of said corporation. [File No. 942–3134].

The Federal Trade Commission having initiated an investigation of certain acts and practices of Arizona Institute of Reproductive Medicine, Ltd., a limited corporation, and Robert

H. Tamis, M.D., individually and as president of said corporation, hereinafter sometimes referred to as proposed respondents or respondents, and it now appearing that proposed respondents are willing to enter into an agreement containing an order to cease and desist from the use of the acts and practices being investigated,

It is hereby agreed by and between proposed respondents and counsel for the Federal Trade Commission that:

1. Proposed respondent Arizona Institute of Reproductive Medicine, Ltd., is a limited corporation existing and doing business under and by virtue of the laws of the State of Arizona, with its office and principal place of business located at 2850 North 24th Street, Suite 500–A, Phoenix, Arizona 85008.

Proposed respondent Robert H. Tamis, M.D., is president of respondent Arizona Institute of Reproductive Medicine. His principal office or place of business is the same as that of the corporate respondent. Dr. Tamis formulates, directs and controls the acts and practices of said corporation.

2. Proposed respondents admit all the jurisdictional facts set forth in the draft complaint.

3. Proposed respondents waive:

(a) Any further procedural steps;

(b) The requirement that the Commission's decision contain a statement of findings of fact and conclusions of law;

(c) All rights to seek judicial review or otherwise to challenge or contest the validity of the order entered pursuant to this agreement; and

(d) Any claim under the Equal Access to Justice Act, 5 U.S.C. 504.

4. This agreement shall not become part of the public record of the proceeding unless and until it is accepted by the Commission. If this agreement is accepted by the Commission, it, together with the draft complaint, will be placed on the public record for a period of sixty (60) days and information in respect thereto publicly released. The Commission thereafter may either withdraw its acceptance of this agreement and so notify the proposed respondents, in which event it will take such action as it may consider appropriate, or issue and serve its complaint (in such form as the circumstances may require) and decision, in disposition of the proceeding.

5. This agreement is for settlement purposes only and does not constitute an admission by proposed respondents of facts, other than the jurisdictional facts, or of violations of law as alleged in the draft of complaint.

6. This agreement contemplates that, if it is accepted by the Commission, and if such acceptance is not subsequently withdrawn by the Commission pursuant to the provisions of § 2.34 of the Commission's rules, the Commission may, without further notice to proposed respondents: (a) issue its complaint corresponding in form and substance with the draft complaint and its decision containing the following order to cease and desist in disposition of the proceeding; and (b) make information public in respect thereto. When so entered, the order to cease and desist shall have the same force and effect and may be altered, modified or set aside in the same manner and within the same time provided by statute for other orders. the order shall become final upon service. Delivery by the U.S. Postal Service of the complaint and decision containing the agreed-to-order to proposed respondents' address as stated in this agreement shall constitute service. Proposed respondents waive any right they may have to any other manner of service. The complaint may be used in construing the terms of the order, and no agreement, understanding, representation, or interpretation not contained in the order or the agreement may be used to vary or contradict the terms of the order.

7. Proposed respondent have read the draft complaint and the following order. Proposed respondents understand that once the order has been issued, they will be required to file one or more compliance reports showing that they have fully complied with the order. Proposed respondents further understand that the may be liable for civil penalties in the amount provided by law for each violation of the order after it becomes final.

Order

Definitions

''Competent and reliable scientific evidence'' shall mean those tests, analyses, research, studies or other evidence based on the expertise of professionals in the relevant area, that have been conducted and evaluated in an objective manner by persons qualified to do so, using procedures generally accepted in the profession to yield accurate and reliable results.

I

It is ordered that respondents Arizona Institute of Reproductive Medicine, Ltd., a limited corporation, and Robert H. Tamis, M.D., individually and as president of said corporation, their successors and assigns, officers, agents, representatives, and employees, directly or through any corporation, subsidiary, division, or other device, in connection with the advertising, promotion, sale or offering for sale of services relating to the treatment of infertility, do forthwith cease and desist from representing, directly or by implication, that respondents' success rates in terms of achieving deliveries is higher than or compares favorably with the success rates of any single provider or group of providers of these services, unless at the time of making such a representation, respondents possess and rely upon competent and reliable scientific evidence for making such a comparison which shall, at a minimum, consist of results for its own patients that are based upon the same criteria for determining the calculation of delivery rates that were used to produce the results with which the comparison is made, or otherwise misrepresenting the past or present success of respondents in achieving live births or pregnancies or the past or present success of any single provider or group of providers of these services in achieving live births or pregnancies.

II

It is further ordered that respondents, shall forthwith distribute a copy of this Order to each of their officers, agents, representatives, and employees, who are engaged in the preparation and placement of advertisements or promotional materials, who communicated with patients or prospective patients, or who have any responsibilities with respect to the subject matter of this Order; and for a period of ten (10) years from the date of entry of this Order, distribute same to all of respondents' future officers, agents, representatives, and employees having said responsibilities.

III

It is further ordered that for five (5) years after the last date of dissemination of any representation covered by this Order, respondents, or their successors and assigns, shall maintain and upon request make available to the Federal Trade Commission for inspection and copying:

A. All materials that were relied upon in disseminating such representation; and

b. All tests, reports, studies, surveys, demonstrations or other evidence in their possession or control that contradict, qualify, or call into question such representation, or the basis relied upon for such representation, including complaints from consumers.

IV

It is further ordered that:

(1) Respondent Arizona Institute of Reproductive Medicine, Ltd. Shall notify the Commission at least thirty (30) days prior to any proposed change in respondent such as dissolution, assignment or sale resulting in the emergence of a successor corporation, the creation or dissolution of subsidiaries or any other change in respondent which may affect compliance obligations arising out of this Order; and

(2) Respondent Robert H. Tamis, M.D. shall promptly notify the Commission of the discontinuance of his present business or of his affiliation with the corporate respondent. In addition, for a period of three (3) years from the date of service of this Order, the respondent shall promptly notify the Commission of each affiliation with a new business or employment that involves an infertility program. Each such notice shall include the respondent's new business address and a statement of the nature of the business or employment in which the respondent is newly engaged as well as a description of respondent's duties and responsibilities in connection with the business or employment.

The expiration of the notice provision of this paragraph shall not affect any other obligation arising under this Order.

V

It is further ordered that respondents shall, within (60) days after service of this Order, file with the Commission a report, in writing, setting forth in detail the manner and form in which they have complied with all requirements of this Order.

Analysis of Proposed Consent Order To Aid Public Comment

The Federal Trade Commission has accepted an agreement to a proposed consent order from the Arizona Institute of Reproductive Medicine, Ltd. and its President, Robert H. Tamis, M.D. The Arizona Institute of Reproductive Medicine offers infertility services to the public, including *in vitro* fertilization.

The proposed consent order has been placed on the public record for sixty (60) days for reception of comments by interested persons. Comments received during this period will become part of the public record. After sixty (60) days, the Commission will again review the agreement and the comments received and will decide whether it should withdraw from the agreement or make final the agreement's proposed order.

The Commission has alleged that proposed respondents failed to possess a reasonable basis for claims they made regarding their comparative success in achieving live births for their patients. The Arizona Institute of Reproductive Medicine claimed a live birth per embryo transfer rate of 17 percent in 1991 and 16 percent for the first six months of 1992, as compared to a national average of 14 percent for 1991.

The Commission alleges that these claims were deceptive because the Arizona Institute of Reproductive Medicine calculated the success statistics in their promotional materials counting multiple births (*i.e.*, twins, triplets, etc.) as multiple deliveries. The national percentage was based on data published by The Society for Assisted Reproductive Technology (''SART''), a national organization whose members, including proposed respondents, are providers of assisted reproductive technologies. SART publishes annually national averages for live births achieved through its members' services. National averages for live births are based on a protocol which requires members to report multiple births as single deliveries. The published report counts a multiple birth as a single delivery. Had proposed respondents likewise counted multiple births as a single delivery, their success statistics for deliveries would have been significantly lower than both the true national average for deliveries per embryo transfer, which was 17 percent for 1991, and the 14 percent represented by respondents.

Part I of the proposed consent order seeks to address the alleged misrepresentation cited in the accompanying complaint by requiring proposed respondents to possess competent and reliable scientific evidence for any future success rate comparative claims for their infertility procedures. Any comparison with other success rates must consist of results that are based upon the same or essentially equivalent tests that were used as a basis for the other rates. Moreover, a fencing-in provision prohibits any misrepresentation of success in achieving pregnancies or live births by respondents as well as prohibiting respondents from misrepresenting the success rates of any single provider or group of providers of these services.

The purpose of this analysis is to facilitate public comment on the proposed order, and it is not intended to constitute an official interpretation of the agreement and proposed order or to modify in any way their terms.

Donald S. Clark,

Secretary.

[FR Doc. 95–16255 Filed 6–30–95; 8:45 am]

BILLING CODE 6750–01–M

[File No. 941–0007]

Council of Fashion Designers of America et al.; Proposed Consent Agreement With Analysis to Aid Public Comment

AGENCY: Federal Trade Commission.

ACTION: Proposed consent agreement.

SUMMARY: In settlement of alleged violations of federal law prohibiting unfair acts and practices and unfair methods of competition, this consent agreement, accepted subject to final Commission approval, would prohibit, among other things, two New York based corporations or their members from attempting to fix or reduce modeling fees, and would require them to take steps to educate fashion designers that price-fixing is illegal.

DATES: Comments must be received on or before September 1, 1995.

ADDRESSES: Comments should be directed to: FTC/Office of the Secretary, Room 159, 6th St. and Pa. Ave., NW., Washington, DC 20580.

FOR FURTHER INFORMATION CONTACT: Michael Antalics or Karen Mills, FTC/S–2627, Washington, DC 20580. (202) 326–2821 or (202) 326–2052.

SUPPLEMENTARY INFORMATION: Pursuant to section 6(f) of the Federal Trade Commission Act, 38 Stat. 721, 15 U.S.C. 46 and § 2.34 of the Commission's rules of practice (16 CFR 2.34), notice is hereby given that the following consent agreement containing a consent order to cease and desist, having been filed with and accepted, subject to final approval, by the Commission, has been placed on the public record for a period of sixty (60) days. Public comment is invited. Such comments or views will be considered by the Commission and will be available for inspection and copying at its principal office in accordance with § 4.9(b)(6)(ii) of the Commission's rules of practice (16 CFR 4.9(b)(6)(ii)).

Agreement Containing Consent Order To Cease and Desist

In the Matter of: The Council of Fashion Designers of America, a corporation; and 7th on Sixth, Inc., a corporation. File No. 941–0007.

The Federal Trade Commission (''Commission''), having initiated an investigation of certain acts and

practices of the Council of Fashion Designers of America and 7th on Sixth, Inc., hereinafter sometimes referred to collectively as ''proposed respondents,'' and it now appearing that the proposed respondents are willing to enter into an agreement containing an order to cease and desist from engaging in certain acts and practices being investigated,

It is hereby agreed by and between proposed respondents, by their duly authorized officers and attorneys, and counsel for the Commission that:

1. Proposed respondent Council of Fashion Designers of America (hereinafter ''CFDA'') is a not-for-profit corporation organized, existing, and doing business under and by virtue of the laws of the State of New York, with its office and principal place of business located at 1412 Broadway, New York, New York 10018.

2. Proposed respondent 7th on Sixth, Inc. (hereinafter ''7th on Sixth'') is a not-for-profit corporation organized, existing, and doing business under and by virtue of the laws of the State of New York, with its office and principal place of business located at 1412 Broadway, New York, New York 10018.

3. Proposed respondents admit all the jurisdictional facts set forth in the draft of complaint.

4. Proposed respondents waive:

(a) Any further procedural steps;

(b) The requirement that the Commission's decision contain a statement of findings of fact and conclusions of law;

(c) All rights to seek judicial review or otherwise to challenge or contest the validity of the order entered pursuant to this agreement; and

(d) Any claim under the Equal Access to Justice Act.

5. This agreement is for settlement purposes only and does not constitute an admission by proposed respondents that the law has been violated as alleged in the draft of complaint or that the facts as alleged in the draft complaint, other than jurisdictional facts, are true.

6. This agreement shall not become part of the public record of the proceeding unless and until it is accepted by the Commission. If this agreement is accepted by the Commission it, together with the draft of complaint contemplated thereby, will be placed on the public record for a period of sixty (60) days and information with respect thereto will be publicly released. The Commission thereafter may either withdraw its acceptance of this agreement and so notify the proposed respondents, in which event it will take such action as it may consider appropriate, or issue and serve its complaint (in such form as the circumstances may require) and decision, in disposition of the proceeding.

7. This agreement contemplates that, if it is accepted by the Commission, and if such acceptance is not subsequently withdrawn by the Commission pursuant to the provisions of § 2.34 of the Commission's rules, the Commission may, without further notice to the proposed respondents, (1) issue its complaint corresponding in form and substance with the draft of complaint and its decision containing the following order to cease and desist in disposition of the proceeding and (2) make information public with respect thereto. When so entered, the order to cease and desist shall have the same force and effect and may be altered, modified, or set aside in the same manner and within the same time provided by statute for other orders. The order shall become final upon service. Delivery by the U.S. Postal Service of the complaint and decision containing the agreed-to order to proposed respondents' addresses as stated in this agreement shall constitute service. Proposed respondents waive any right to any other manner of service. The complaint may be used in construing the terms of the order, and no agreement, understanding, representation, or interpretation not contained in the order or the agreement may be used to vary or contradict the terms of the order.

8. Proposed respondents have read the proposed complaint and order contemplated hereby. They understand that once the order has been issued, they will be required to file one or more compliance reports showing that they have fully complied with the order. Proposed respondents further understand that they may be liable for civil penalties in the amount provided by law for each violation of the order after the order becomes final.

Order

I

It is ordered that, as used in this order, the following definitions shall apply:

A. ''Respondents'' means the Council of Fashion Designers of America and 7th on Sixth, Inc.;

B. ''Person'' means any individual, partnership, association, company, or corporation;

C. ''CFDA'' means the Council of Fashion Designers of America, its directors, trustees, officers, members, representatives, committees, subcommittees, boards, divisions, agents, employees, successors and assigns;

D. ''7th on Sixth'' means 7th on Sixth, Inc., its directors, trustees, officers, members, representatives, committees, subcommittees, boards, divisions, agents, employees, successors and assigns.

II

It is further ordered that respondents CFDA and 7th on the Sixth, directly or indirectly, or through any corporate or other device, in or affecting commerce, as ''commerce'' is defined in section 4 of the Federal Trade Commission Act, 15 U.S.C. 44, forthwith cease and desist from entering into, attempting to enter into, organizing or attempting to organize, implementing or attempting to implement, or continuing or attempting to continue, any combination, agreement, or understanding, express or implied, for the purpose or with the effect of:

A. Raising, lowering, fixing, maintaining or stabilizing the price, terms or other forms or conditions of compensation paid for modeling or modeling agency services; or

B. Encouraging, advising, pressuring, assisting, inducing, or attempting to induce any person to engage in any action prohibited by this order.

Provided, however, that it shall not be deemed a violation of this order for more than one member of CFDA and/or 7th on Sixth to employ or use the services of the same person where such employment or use is not otherwise in furtherance of any action prohibited by this order.

III

It is further ordered that Respondents CFDA and 7th on Sixth each shall:

A. Within thirty (30) days after the date on which this order becomes final, distribute by certified U.S. first-class mail a copy of this order and the accompanying complaint, and the notice attached in Appendix A hereto, to:

1. Each of its members, officers, directors, and employees, and each fashion designer who has shown in the fashion shows organized by 7th on Sixth;

2. Each person to whom it has, at any time prior to the effective date of this order, communicated the benefits of membership in 7th on Sixth, or whom it has invited to join 7th on Sixth, as identified in Appendix B hereto;

3. The International Model Managers Association, c/o David Blasband, Esq., Deutsch, Klagsbrun & Blasband, 800 Third Avenue, New York 10022;

4. Each of the modeling agencies listed in Appendix C attached hereto; and

B. For a period of five (5) years from the date this order becomes final, cause to be made minutes of all business meetings of its membership, its board of directors, its committees and subcommittees. Such minutes shall (i) identify all persons attending such meeting, (ii) include a certification, signed by the presiding officer and secretary under penalty of perjury, that states whether prices, terms, or other forms or conditions of compensation paid for modeling or modeling agency services were discussed at the meeting, and (iii) summarize what was discussed at the meeting. If prices, terms, or other forms or conditions of compensation paid for modeling or modeling agency services were discussed at any business meeting subject to this order, then the minutes of such meeting shall identify the participants in the discussion and state in detail the substance of the discussion(s). Minutes and the required certifications shall be retained for a period of five (5) years from the date the minutes were created. Such minutes shall be provided to the Commission upon request.

C. Within sixty (60) days after the date on which this order becomes final, and annually thereafter for five (5) years, on or before the anniversary date of this order,

1. Communicate either orally or in writing to its officers, directors, employees and members concerning their obligations under this order;

2. Obtain from each of its officers, directors, and employees an annual written certification, that he or she (a) has read, understands and agrees to abide by the terms of this order, (b) is not aware of any violation of this order, and (c) has been advised and understands that failure of CFDA or 7th on Sixth, as defined in the order, to comply with this order may subject either or both of the respondents to penalties for violation of the order; and

3. Retain the certifications required by Section III.C.2. Such certifications shall be provided to the Commission upon request.

IV

It is further ordered that each respondent shall:

A. Notify the Commission at least thirty (30) days prior to any proposed change in the respondent such as a dissolution, assignment, or sale resulting in the emergence of a successor corporation, the creation or dissolution of subsidiaries, bankruptcy, or any other change in the respondent which may affect compliance obligations under this order; and

B. File a written report with the Commission within sixty (60) days after the date the order becomes final, and annually thereafter for five (5) years on the anniversary of the date the order became final, and at such other times as the Commission may by written notice require, setting forth in detail the manner and form in which the respondent has complied and is complying with the order.

V

It is further ordered that, for the purpose of determining or securing compliance with this order, each respondent shall permit any duly authorized representative of the Commission:

A. Upon reasonable notice to respondent access, during office hours and in the presence of counsel, to inspect and copy all books, ledgers, accounts, correspondence, memoranda and other records and documents in the possession or under the control of each respondent relating to any matters contained in this order; and

B. Upon five days' notice to respondent and without restraint or interference from it, to interview officers, directors, employees, or agents of respondent, who may have counsel present.

VI

It is further ordered that this Order shall terminate twenty (20) years from the date this Order becomes final.

Appendix A

Dear _____: [Respondent] has agreed, without admitting any violation of the law, to the entry of a Consent Order by the Federal Trade Commission prohibiting certain conduct. A copy of the Order is enclosed.

The Order spells out [Respondent]'s obligations in greater detail, but we want you to know and understand the following:

The Council of Fashion Designers of America and 7th on Sixth, Inc. may not negotiate on behalf of fashion designers collectively with models or modeling or modeling agency services, and may not enter into or continue any agreement or understanding, express or implied, for the purpose or with the effect of affecting the prices paid for modeling or modeling agency services.

Non-compliance with this Order may subject [Respondent] to penalties for violation of the order, and may be reported to the Federal Trade Commission.

Sincerely,

_____

[Respondent]

Enclosure

Appendix B

Mr. Victor Alfaro, 130 Barrow Street, Suite 105, New York, N.Y. 10014
Mr. Robert Danes, 488 Seventh Avenue, New York, N.Y. 10018
Ms. Gemma Kahng, 550 Seventh Avenue, New York, N.Y. 10018
Ghost, c/o Showroom Seven, 498 Seventh Avenue, New York, N.Y. 10018
Mr. Mark Eisen, 214 West 39th Street, New York, N.Y. 10018
Mr. Byron Lars, 29 West 57 Street, New York, N.Y. 10019
Ms. Mary McFadden, 240 West 35th Street, New York, N.Y. 10001
Magaschioni, Inc., 499 Seventh Avenue, New York, N.Y. 10018
The Next Generation, 242 West 38th Street, New York, N.Y. 10018
Mr. Mark Badgley, Badgley Mischka, 525 Seventh Avenue, New York, N.Y. 10018
Mr. James Mischka, Badgley Mischka, 525 Seventh Avenue, New York, N.Y. 10018
Ms. Jennifer George, Jennifer George, Inc., 530 Seventh Avenue, New York, N.Y. 10018
Mr. Fernando Sanchez, Fernando Sanchez Ltd., 5 West 19th Street, New York, N.Y. 10011
Ms. Joan Vass, Joan Vass NY, 117 East 29th Street, New York, N.Y. 10016
Ms. Adrienne Vittadini, 1441 Broadway, New York, N.Y. 10018
Mr. Byron Lars, 29 West 57th Street, New York, N.Y. 10019

Appendix C

Ms. Bethann Hardison, Bethann Management Co., 36 North Moore Street, New York, NY 10013
Boss Models, 317 West Thirteenth Street, New York, NY 10014
Ms. Frances Grill, President, Click Model Management, 881 7th Ave., Suite 1013, New York, NY 10019
Mr. Michael Flutie, President, Company Ltd., 270 Lafayette St., Suite 1400, New York, NY 10012
Ms. Monique Pillard, President, Elite Model Management, 111 East 2nd Street, New York, NY 10010
Ms. Ellen Harth, Elite Runway, 149 Madison Avenue, New York, NY 10016
Joseph Hunter, President, Ford Models, Inc., 344 East 59th Street, New York, NY 10022
Mr. Charles Bennett, Senior Vice President, International Management Group, 170 Fifth Avenue, 10th Floor, New York, NY 10010
Ms. Irene Marie, President, I'M New York, 120 Wooster St., New York, NY 10012
Ms. Irene Marie, President, Irene Marie, Inc., 728 Ocean Drive, Miami Beach, FL 33139
Ms. Milie Pellet, President, Next Management, 23 Watts Street, 5th Floor, New York, NY 10013
Now Model Management, 568 Broadway, Suite 504–A, New York, NY 10012
Pauline Bernatchez, President, Pauline's, 379 West Broadway, 5th Floor, New York, NY 10012
Ms. Natasha Esch, President, Wilhelmina Models, Inc., 300 Park Avenue South, 2nd Floor, New York, NY 10010
Women Model Management, 107 Greene Street, New York, NY 10012
Ms. Barbara Lantz, President, Zoli Management, 3 West 18th Street, New York, NY 10011

Analysis of Proposed Consent Order To Aid Public Comment

The Federal Trade Commission has accepted an agreement to a proposed consent order from The Council of Fashion Designers of America, Inc. (CFDA) and 7th on Sixth, Inc.

The proposed consent order has been placed on the public record for sixty (60) days for reception of comments by interested persons. Comments received during this period will become part of the public record. After sixty (60) days, the Commission will again review the agreement and the comments received and will decide whether it should withdraw from the agreement or make final the agreement's proposed order.

The complaint alleges that CFDA, a trade association of fashion designers, and 7th on Sixth, a not-for-profit corporation, and their members, have engaged in acts and practices that have unreasonably restrained competition among fashion designers. The complaint alleges that CFDA and 7th on Sixth fixed prices for the hiring of runway models. The complaint alleges that this price fixing agreement among purchasers of modeling and modeling agency services violates Section 5 of the Federal Trade Commission Act.

CFDA and 7th on Sixth have signed a proposed consent agreement that requires them to cease and desist from any agreement which has the purpose or effect of fixing prices paid or terms of employment for modeling or modeling agency services and from encouraging others to engage in such activities. The proposed consent order requires that CFDA and 7th on Sixth distribute a copy of the complaint and a letter notifying their members and employees, modeling agencies and other designated parties listed in the order that neither the CFDA nor 7th on Sixth may negotiate on behalf of fashion designers collectively with models or modeling agencies, and they may neither continue nor enter into any agreement for the purpose of affecting modeling prices.

The proposed order includes a proviso which makes clear that fashion designers who choose to employ or use the services of the same model will not be deemed in violation of the order, where such employment or use is not otherwise in furtherance of any action prohibited by the order. The proviso will permit fashion designers to hire models independently without fear that the fact that they hire the same model itself will result in liability. The order also permits two or more designers to agree to hire and use models jointly without violating the order, so long as they do not agree to do so in furtherance of the kind of prohibited agreement to which CFDA and 7th on Sixth were party.

In order to deter future law violations and facilitate FTC review of compliance with the order, the proposed order requires CFDA and 7th on Sixth to make and keep minutes of all meetings of their membership board, committees or subcommittees, for five years. These minutes must indicate if prices or terms of modeling services are discussed at any meeting. CFDA and 7th on Sixth must provide these minutes to the FTC upon request. The parties must also communicate to their members, officers, directors and employees their obligations under this order. Officers, directors and employees must in turn provide annual written certification that they have received such notice.

The purpose of this analysis is to facilitate public comment on the proposed order, and it is not intended to constitute an official interpretation of the agreement and proposed order or to modify in any way their terms.

Donald S. Clark,

Secretary.

[FR Doc. 95–16254 Filed 6–30–95; 8:45 am]

BILLING CODE 6750–01–M

[File No. 942–3058]

Live-Lee Productions, Inc.; Proposed Consent Agreement With Analysis to Aid Public Comment

AGENCY: Federal Trade Commission.

ACTION: Proposed Consent Agreement.

SUMMARY: In settlement of alleged violations of federal law prohibiting unfair acts and practices and unfair methods of competition, this consent agreement, accepted subject to final Commission approval, would prohibit, among other things, a Los Angeles based corporation, and Ruta Lee, who directs and controls the corporation, from making claims for any food, dietary supplement or drug unless they have competent and reliable scientific evidence to support the claims.

DATES: Comments must be received on or before September 1, 1995.

ADDRESSES: Comments should be directed to: FTC/Office of the Secretary, Room 159, 6th St. and Pa. Ave., NW., Washington, DC 20580.

FOR FURTHER INFORMATION CONTACT: Lisa B. Kopchik or Joel Winston, FTC/S–4002, Washington, DC 20580. (202) 326–3139 or (202) 326–3153.

SUPPLEMENTARY INFORMATION: Pursuant to section 6(f) of the Federal Trade Commission Act, 38 Stat. 721, 15 U.S.C. 46 and § 2.34 of the Commission's rules of practice (16 CFR 2.34), notice is hereby given that the following consent agreement containing a consent order to cease and desist, having been filed with and accepted, subject to final approval, by the Commission, has been placed on the public record for a period of sixty (60) days. Public comment is invited. Such comments or views will be considered by the Commission and will be available for inspection and copying at its principal office in accordance with § 4.9(b)(6)(ii) of the Commission's rules of practice (16 CFR 4.9(b)(6)(ii)).

In the Matter of: Live-Lee Productions, Inc., a corporation, and Ruta Lee, individually and as an officer and director of said corporation, File No. 942–3058.

Agreement Containing Consent Order to Cease and Desist

The Federal Trade Commission having initiated an investigation of certain acts and practices of Live-Lee Productions, Inc., a corporation, and Ruta Lee, individually and as an officer and director of said corporation, hereinafter sometimes referred to as proposed respondents, and it now appears that proposed respondents are willing to enter into an agreement containing an order to cease and desist from the use of the acts and practices being investigated,

It is hereby agreed by and between Live-Lee Productions, Inc., a corporation, by its duly authorized officer, and Ruta Lee, individually and as an officer and director of said corporation, and counsel for the Federal Trade Commission that:

1. Proposed respondent Live-Lee Productions, Inc. is a corporation organized, existing, and doing business under and by virtue of the laws of the States of Texas, with its offices and principal place and business at 2761 Laurel Canyon Boulevard, Los Angeles, California 90046.

Proposed respondent Ruta Lee is an officer and director of said corporation. She formulates, directs, and controls the policies, acts, and practices of said corporation. She resides at 2436 Shirley Avenue, Fort Worth, Texas 76109.

2. Proposed respondents admit all the jurisdictional facts set froth in the draft of the complaint.

3. Proposed respondents waive:

(a) Any further procedural steps:

(b) The requirement that the Commission's decision contain a statement of findings of fact and conclusions of law; and

(c) All rights to seek judicial review or otherwise to challenge or contest the validity of the order entered pursuant to this agreement.

4. This agreement shall not become part of the public record of the proceeding unless and until it is accepted by the Commission. If this agreement is accepted by the Commission it, together with the draft of the complaint contemplated thereby, will be placed in the public record for a period of sixty (60) days and information in respect thereto publicly released. The Commission thereafter may either withdraw its acceptance of this agreement and so notify the proposed respondents, in which event it will take such action as it may consider appropriate, or issue and serve its complaint (in such form as the circumstances may require) and decision, in disposition of the proceeding.

5. This agreement is for settlement purposes only and does not constitute an admission by proposed respondents that the law has been violated as alleged in the draft complaint, or that the facts as alleged in the draft complaint, other than the jurisdictional facts, are true.

6. This agreement contemplates that, if it is accepted by the Commission, and if such acceptance is not subsequently withdrawn by the Commission pursuant to the provisions of § 2.34 of the Commission's rules, the Commission may, without further notice to proposed respondents, (1) issue its complaint corresponding in form and substance to the draft of complaint and its decision containing the following order to cease and desist in disposition of the proceeding and (2) make information public in respect thereto. When so entered, the order to cease and desist shall have the same force and effect and may be altered, modified or set aside in the same manner and within the same time provided by statute for other orders. The order shall become final upon service. Delivery by the U.S. Postal Service of the complaint and decision containing the agreed-to order to proposed respondents' addresses as stated in this agreement shall constitute service. Proposed respondents waive any right they may have to any other manner of service. The complaint may be used in construing the terms of the order, and no agreement, understanding, representation, or interpretation not contained in the order or the agreement may be used to vary or contradict the terms of the order.

7. Proposed respondents have read the proposed complaint and order contemplated hereby. They understand that once the order has been issued, they will be required to file one or more compliance reports showing that they have fully complied with the order. Proposed respondents further understand that they may be liable for civil penalties in the amount provided by law for each violation of the order after it becomes final.

Order

I

It is ordered that respondents Live-Lee Productions, Inc., a corporation, its successors and assigns, and its officers; and Ruta Lee, individually and as an officer and director of said corporation; and respondents' agents, representatives and employees, directly or through any partnership, corporation, subsidiary, division or other device, in connection with the manufacturing, advertising, packaging, labeling, promotion, offering for sale, sale or distribution of Life Way Vitamin C and Zinc Spray, Life Way Antioxidant Spray, Life Way Vitamin B–12 Spray, or any other food, food or dietary supplement, or drug, as ''food'' and ''drug'' are defined in section 15 of the Federal Trade Commission Act, 15 U.S.C. 55, in or affecting commerce, as ''commerce'' is defined in the Federal Trade Commission Act, do forthwith cease and desist from making any representation, in any manner, directly or by implication:

A. That such product:

1. Is more fully absorbed by the human body than any other product;

2. Heals lesions in the mouth, cold sores on the mouth, or cracking of the corners of the lips;

3. Prevents common colds;

4. Effectively treats symptoms related to hangovers;

5. Increases energy;

6. Ensures the proper functioning of the immune system;

7. Reduces the risk of contracting infectious diseases;

8. Prevents facial lines; or

B. That use of the product can or will have any effect on the user's health, or on the structure or function of the human body,

unless, at the time of making such representation, respondents possess and rely upon competent and reliable scientific evidence that substantiates the representation. For the purpose of this Order, ''competent and reliable scientific evidence'' shall mean tests, analyses, research, studies, or other evidence based on the expertise of professionals in the relevant area, that have been conducted and evaluated in an objective manner by persons qualified to do so, using procedures generally accepted in the profession to yield accurate and reliable results;

Provided that it shall be a defense hereunder that the respondents neither knew nor had reason to know of the inadequacy of substantiation for the representations.

II

It is further ordered that respondents Live-Lee Productions, Inc., a corporation, its successors and assigns, and its officers; and Ruta Lee, individually and as an officer and director of said corporation; and respondents' agents, representatives and employees, directly or through any partnership, corporation, subsidiary, division or other device, in connection with the manufacturing, advertising, packaging, labeling, promotion, offering for sale, sale or distribution of Life Way Smoke-Less Nutrient Spray or any other smoking cessation product, program, or service, in or affecting commerce, as ''commerce'' is defined in the Federal Trade Commission Act, do forthwith cease and desist from making any representation, in any manner, directly or by implication:

A. That such product, program, or service enables smokers, regardless of how long they have smoked or how much they smoke, to stop smoking easily;

B. That such product, program, or service satisfies the physiological urge to smoke a cigarette, or eliminates the quivering, anxiety and weight gain attendant with quitting smoking; or

C. Regarding the performance, benefits, efficacy or safety of any such product, program, or service,

unless, at the time of making such representation, respondents possess and rely upon competent and reliable scientific evidence that substantiates the representation;

Provided that it shall be a defense hereunder that the respondents neither knew nor had reason to know of the inadequacy of substantiation for the representation.

III

It is further ordered that, for five (5) years after the last date of dissemination of any representation covered by this Order, respondents Live-Lee Productions, Inc., a corporation, its successors and assigns, and its officers; and Ruta Lee individually and as an officer and director of said corporation, or their successors and assigns, shall maintain and upon request make available to the Federal Trade Commission for inspection and copying:

A. All materials that were relied upon in disseminating such representation; and

B. All tests, reports, studies, surveys, demonstrations or other evidence in their possession or control that

contradict, qualify, or call into question such representation, or the basis relied upon for such representation, including complaints from consumers.

IV

It is further ordered that respondents Live-Lee Productions, Inc. shall, within thirty (30) days after service of this Order, provide a copy of this Order to each of respondent's current principals, officers, directors and managers, and to all personnel, agents and representatives having sales, advertising or policy responsibility with respect to the subject matter of this Order.

V

It is further ordered that respondent Live-Lee Productions, Inc. shall notify the Federal Trade Commission at least thirty (30) days prior to any proposed change in its corporate structure, including but not limited to dissolution, assignment or sale resulting in the emergence of a successor corporation, the creation or dissolution of subsidiaries or affiliates, the planned filing of a bankruptcy petition, or any other corporate change that may affect compliance obligations arising out of this Order.

VI

It is further ordered that respondent Ruta Lee shall, for a period of five (5) years from the date of issuance of this Order, notify the Commission within thirty (30) days of the discontinuance of her present business or employment and of her affiliation with any new business or employment which involves the sale of consumer products. Each notice of affiliation with any new business or employment shall include the respondent's new business address and telephone number, current home address, and a statement describing the nature of the business or employment and her duties and responsibilities.

VII

It is further ordered that respondents Live-Lee Productions, Inc., a corporation, its successors and assigns, and its officers; and Ruta Lee, individually and as an officer and director of said corporation, shall, within sixty (60) days after service of this Order, and at such other times as the Federal Trade Commission may require, file with the Commission a report, in writing, setting forth in detail the manner and form in which they have complied with this Order.

Analysis of Proposed Consent Order To Aid Public Comment

The Federal Trade Commission has accepted an agreement to a proposed consent order from Live-Lee Productions, Inc. (''Live-Lee'') and Ruta Lee (''Lee'').

The proposed consent order has been placed on the public record for sixty (60) days for receipt of comments by interested persons. Comments received during this period will become part of the public record. After sixty (60) days, the Commission will again review the agreement and the comments received and will decide whether it should withdraw from the agreement or make final the agreement's proposed order.

This matter involves alleged deceptive representations for three spray vitamin products and a spray smoking cessation product. The products at issue are Life Way Vitamin C and Zinc Spray, Life Way Antioxidant Spray, Life Way Vitamin B–12 Spray, and Life Way Smoke-Less Nutrient Spray. The complaint charges that Lee performed the functions of an advertising agency by creating and disseminating the representations, and that she received a royalty for each unit of product that was sold. The claims were made on television advertisements called ''Spotlight on Ruta Lee.'' These advertisements were broadcast on the Home Shopping Club, commercial programming shown on the Home Shopping Network.

Live-Lee is Lee's closely-held corporation, which is engaged in the business of providing the services of Ruta Lee in connection with the marketing, advertising, sale and distribution of consumer products. Lee is an officer, director, and sole shareholder of Live-Lee.

According to the FTC complaint, Lee made claims that the vitamins in the spray products are more fully absorbed by the human body than vitamins taken in pill form; and that the vitamins would heal mouth lesions, cold sores, and cracking of the corners of the lips; prevent common colds; treat hangover symptoms; increase users' energy; ensure the proper functioning of the immune system; reduce the risk of contracting infectious diseases; and prevent facial lines. The complaint also alleges that Lee made claims that the smoking cessation spray would enable smokers, regardless of how long they have smoked or how much they smoke, to stop smoking easily; and would satisfy the physiological urge to smoke a cigarette and eliminate the quivering, anxiety and weight gain that go along with quitting smoking. The complaint alleges that the respondents did not have substantiation for these representations at the time they were made. The complaint further alleges that the respondents knew or should have known that the representations were not substantiated.

The proposed consent order contains provisions designed to prevent the respondents from engaging in similar acts and practices in the future.

Part I of the proposed order prohibits the respondents from representing that any food, food or dietary supplement, or drug can or will have any effect on the user's health, or on the structure or function of the human body, unless, at the time they make the representation, they possess and rely upon competent and reliable scientific evidence that substantiates the representation.

Part II of the proposed order prohibits respondents from making any representation about the performance, benefits, efficacy, or safety of any smoking cessation product, program, or service, unless they have competent and reliable scientific evidence that substantiates the representation. With respect to both Parts I and II, the proposed order provides a defense to respondents if they neither knew nor had reason to know of the inadequacy of the substantiation for the representation.

Part III requires that the respondents keep records concerning claims covered by the order, including materials that they relied upon when making the claims.

Part IV requires respondent Live-Lee to provide a copy of the order to each of its principals, officers, directors, and managers, and to all personnel, agents, and representatives having sales, advertising, or policy responsibility with respect to the subject matter of the order.

Part V requires respondent Live-Lee to notify the Commission of any change in its corporate structure that might affect its compliance with the order.

Part VI requires respondent Ruta Lee for 5 years to notify the Commission of any change in her business or employment or her affiliation with any new business or employment that involves the sale of consumer products.

Part VII requires respondents to file compliance reports with the Commission.

On March 3, 1995, the Commission issued a complaint against Home Shopping Network, Inc.; Home Shopping Club, Inc.; and HSN Lifeway Health Products, Inc. for their role in making and disseminating the same allegedly deceptive representations (Docket No. 9272). That case is now

pending before an Administrative Law Judge.

The purpose of this analysis is to facilitate public comment on the proposed order, and it is not intended to constitute an official interpretation of the agreement and proposed order or to modify in any way their terms.

Donald S. Clark,

Secretary.

[FR Doc. 95–16256 Filed 6–30–95; 8:45 am]

BILLING CODE 6750–01–M

DEPARTMENT OF HEALTH AND HUMAN SERVICES

Administration on Aging

White House Conference on Aging

AGENCY: White House Conference on Aging, AoA, HHS.

ACTION: Notice of meeting.

SUMMARY: Notice is hereby given, pursuant to Title II of the Older Americans Act Amendments of 1987, Pub. L. 100–175 as amended by Pub. L. 102–375 and Pub. L. 103–171, that the 1995 White House Conference on Aging Business Advisory Committee will meet on Monday, July 17, 1995 from 10:00 AM–noon in the Hubert H. Humphrey Building at 200 Independence Avenue, SW in Washington, DC. Information on the specific room in which the meeting will be held can be obtained by calling the telephone number given below. The meeting of the Committee shall be open to the public.

The proposed agenda includes discussion of how the Committee and the business community can assist with implementation of the resolutions adopted by the Conference delegates. Records shall be kept of all Committee proceedings and shall be available for public inspection at 501 School Street, SW, 8th Floor, Washington, DC 20024.

FOR FURTHER INFORMATION CONTACT: White House Conference on Aging, 501 School Street, SW, 8th Floor, Washington, DC 20024; telephone (202) 245–7116.

Fernando M. Torres-Gil,

Assistant Secretary for Aging.

[FR Doc. 95–16270 Filed 6–30–95; 8:45 am]

BILLING CODE 4130–02–M

Agency for Health Care Policy and Research

Health Care Policy and Research Special Emphasis Panel Meeting

In accordance with section 10(a) of the Federal Advisory Committee Act (5 U.S.C., Appendix 2) announcement is made of the following special emphasis panel scheduled to meet during the month of August 1995:

Name: Health Care Policy and Research Special Emphasis Panel

Date and Time: August 10, 1995, 8:30 a.m.

Place: Hyatt Regency, One Bethesda Metro Center, Conference Room TBA, Bethesda, MD 20814.

Open August 10, 8:30 a.m. to 9 a.m. Closed for remainder of meeting.

Purpose

This panel is charged with conducting the initial review of grant applications proposing health services research training programs under the National Research Service Awards Program.

Agenda

The open session of the meeting on August 10, from 8:30 a.m. to 9 a.m., will be devoted to a business meeting covering administrative matters. During the closed session, the committee will be reviewing and discussing grant applications dealing with health services research issues. In accordance with the Federal Advisory Committee Act, 5 U.S.C., Appendix 2 and 5 U.S.C., 552b(c)(6), it has been determined that this latter session will be closed because the discussions are likely to reveal personal information concerning individuals associated with the grant applications. This information is exempt from mandatory disclosure.

Anyone wishing to obtain a roaster of members or other relevant information should contact Linda W. Blankenbaker, Agency for Health Care Policy and Research, Suite 400, 2101 East Jefferson Street, Rockville, Maryland 20852, Telephone (301) 594–1438.

Agenda items for this meeting are subject to change as priorities dictate.

Dated: June 26, 1995.

Clifton R. Gaus,

Administrator.

[FR Doc. 95–16253 Filed 6–30–95; 8:45 am]

BILLING CODE 4160–90–M

Food and Drug Administration

[Docket No. 92N–0371]

New Drug Applications; Refusal to File; Change in Procedures to Include Industry Representatives in Meetings of the Review Committee

AGENCY: Food and Drug Administration, HHS.

ACTION: Notice.

SUMMARY: The Food and Drug Administration (FDA) is announcing a change in the review process conducted by the Center for Drug Evaluation and Research's (CDER's) Refusal to File (RTF) review committee. The new procedures will permit applicants that have received an RTF to attend the meeting at which the RTF review committee evaluates the RTF imposed on its application. This change, which will be implemented on a trial basis, may enhance understanding of and participation in the RTF review committee process. Additional changes to the procedures may be useful and comments are requested.

DATES: Comments may be submitted at any time.

ADDRESSES: Submit written comments on this change in procedures to the Dockets Management Branch (HFA–305), Food and Drug Administration, rm. 1–23, 12420 Parklawn Dr., Rockville, MD 20857.

FOR FURTHER INFORMATION CONTACT: Janet M. Jones, Center for Drug Evaluation and Research (HFD–014), Food and Drug Administration, 5600 Fishers Lane, Rockville, MD 20857, 301–594–5445.

SUPPLEMENTARY INFORMATION: In the **Federal Register** of May 18, 1993 (58 FR 28983), FDA announced the establishment of a standing committee in CDER's to conduct periodic review of the CDER's RTF decisions. The committee was established on a 1-year trial basis. Initially, the committee invited companies to submit requests for review of RTF's that they considered to have been made inappropriately. The RTF review committee consists of senior CDER officials, a senior official from the Center for Biologics Evaluation and Research, and FDA's Chief Mediator and Ombudsman.

CDER created the RTF review committee because it believes that a clear, well-understood, and consistently applied RTF policy may improve substantially the efficiency of the new drug evaluation process. The practice of submitting an incomplete or inadequate application and then providing additional information during an extended review period is inherently inefficient and a waste of agency resources. In addition, it is unfair to those applicants who fulfill their scientific and legal obligations by submitting complete applications to have the review of their applications delayed while other incomplete applications submitted earlier undergo review and repair.

FDA regulations on filing applications, including grounds and procedures for RTF's, are found in § 314.101 (21 CFR 314.101). In the past, some CDER review divisions refused to

file applications only where the deficiencies were extreme while other divisions applied the regulation more broadly. When deciding whether to file an application, CDER exercises discretion, considering in particular whether the application is for a medically important drug. The RTF procedure is used in the context of CDER's effort to promote rapid development and review of applications.

Although an RTF is not a final determination, it is a significant step that delays full review of an application. The applicant who receives an RTF notification may request an informal conference with FDA and thereafter may ask that the application be filed over protest as described under § 314.101(a)(3). CDER believes that an RTF decision is, in general, of benefit to applicants as an early signal that the application has major deficiencies.

When the RTF review began, FDA invited companies to request review of RTF decisions that they wanted FDA to reconsider. As explained in the **Federal Register** of September 21, 1994 (59 FR 48440), in January 1994, the RTF review committee began to meet bimonthly and to review all of the RTF decisions that CDER makes, rather than only some of them, and requests by drug companies were no longer necessary. CDER decided to review all of the RTF decisions because the number of those decisions had decreased over the previous year and because RTF decisions have other effects related to user fees. Under section 736(a)(1)(D) of the Prescription Drug User Fee Act of 1992 (21 U.S.C. 379h(a)(1)(D)), FDA is authorized to retain 25 percent of the total user fee assessed for each NDA that it refuses to file. If the agency incorrectly refuses to file an application, FDA needs to identify and correct the error promptly so that the application may be filed and a review initiated and so that incorrectly retained fees may be returned to the applicant.

To increase the understanding of and participation in this process, the RTF review committee has decided to invite each company whose application has been refused for filing to the committee meeting scheduled to review that RTF decision. The committee usually will review no more than four RTF's per meeting. At the RTF review meeting, the CDER division that made the RTF decision will present to the committee the deficiencies present in the application and will explain the RTF decision. The applicant will not attend this portion of the meeting as the discussion generally involves, among other things, predecisional deliberations and internal management issues. After the division's presentation, the applicant will be invited to give a brief presentation (approximately 10 minutes), and may be asked questions by the committee. For the reasons specified above, the applicant will not remain for the committee deliberations on the appropriateness of the RTF, but will be advised of its decision. The agency also may send followup correspondence to the applicant after the meeting. Because the presentations may deal with confidential commercial information, applicants will not be permitted to be present during presentations made by other companies.

The change in the procedures will be implemented on a trial basis at the next meeting to review RTF decisions. Additional changes to the procedures may be appropriate, and comments are requested.

Interested persons may, at any time, submit to the Dockets Management Branch (address above) written comments regarding this change in procedures. Two copies of any comments are to be submitted, except that individuals may submit one copy. Comments are to be identified with the docket number found in brackets in the heading of this document. Received comments may be seen in the office above between 9 a.m. and 4 p.m., Monday through Friday.

Dated: June 26, 1995.

William B. Schultz,

Deputy Commissioner for Policy.

[FR Doc. 95–16205 Filed 6–30–95; 8:45 am]

BILLING CODE 4160–01–F

National Institutes of Health

National Institute of Neurological Disorders and Stroke: Opportunity for a Cooperative Research and Development Agreement (CRADA) for the Development of a High Performance Gene Expression Mapping Assay System

AGENCY: National Institutes of Health, PHS, DHHS.

ACTION: Notice.

SUMMARY: The National Institutes of Health (NIH) seeks an agreement with a company(ies) which will collaborate on the development of an automated high capacity, high resolution cellular gene mapping assay system for mRNA expression analysis system or genomic fingerprinting.

ADDRESSES: Questions concerning scientific aspects of this opportunity may be addressed to Roland Somogyi, Ph.D., National Institutes of Health, NINDS, 9000 Rockville Pike, Building 36, Room 2C02, Bethesda, MD 20892. Telephone: 301–402–1407, or e-mail: ROLANDS@HELIX.NIH.GOV. Business questions should be addressed to Stephen Finley, Ph.D., National Institutes of Health, NINDS, 9000 Rockville Pike, Building 31, Room 8A46, Bethesda, MD 20892. Telephone: 301–496–4697, or e-mail: SF31W@NIH.GOV.

DATES: Proposals should be received by September 1, 1995.

SUPPLEMENTARY INFORMATION: The Laboratory of Neurophysiology (LNP) studies the cellular function and processes of normal and abnormal nerve cells. The over- and under-expression of genes play critical roles in the control of cellular function, proliferation, and differentiation, and are responsible for a number of neurodegenerative disorders and hyperplasias. The LNP developed a quantitative reverse transcription polymerase chain reaction based protocol which optimizes the identification of over- or under-expression of genes in a cell. A library of primers for over 100 different signaling genes have been successfully used to screen expression patterns in nerve cells.

Current cellular gene expression research is hampered by the time required for sequential analysis of the expressed genes in a cell. There is no fully automated high capacity, high resolution assay system developed for gene expression mapping (GEM).

An assay system which analyzes the expressed genes in cells will provide a new opportunity for exploring how environmental or genetic changes alter the cellular expression of genes. The significance of such a system is that it allows cascade effects of a single event to be analyzed in toto, as contrasted to being limited to the study of the effect on a single gene. This new approach will refine the study of cellular signaling processes and open the field of experimental genetic networks. The study of genetic networks represents a frontier which will provide insight into complex interactions between genes. This is becoming a necessity since many current findings cannot be understood in terms of a single gene acting in isolation.

The LNP would like to collaborate in developing an automated system for the laborious gene expression assay process which incorporates sample preparation, reverse transcription polymerase chain reaction, thermal cycling, and high speed analysis of the final product. The aim of this CRADA is to produce an automated system which breaks through

the current technological barriers and ultimately enables the cataloging of the expression levels of all genes in a cell type. The culmination of this CRADA could provide a means to simultaneously screen the mRNA variations in a multitude of cell types or provide a means for the genomic fingerprinting of cellular DNA.

Role of NINDS

1. The LNP will provide its expertise in the quantitative reverse transcription polymerase chain reaction (RTPCR) protocol it developed as well as a custom library of primers for over 100 different genes.

2. Collaborate in designing instrumentation adapted for high volume, high resolution gene expression analysis.

3. Collaborate in the formulation, evaluation, optimization of experimental protocols based on the quantitative RTPCR protocols identified above.

The role and criteria for selection of the successful company(ies) under the CRADA will include, but may not be limited to, the following:

1. Having an established ability to design, manufacture or modify in one or more of the following: Thermocycling devices, capillary electrophoresis devices, automated detection systems (i.e fluorescence or chromophoric) and laboratory robotics.

2. Ability to provide appropriate instrumentation either owned by the company or obtained through third party licensing agreements.

3. Ability to market and sell the final product produced through the collaboration.

Dated: June 16, 1995.

Barbara McGarey,

Deputy Director, Office of Technology Transfer, National Institutes of Health.

[FR Doc. 95–16233 Filed 6–30–95; 8:45 am]

BILLING CODE 4140–01–P

Meeting of the Panel to Assess the NIH Investment in Research on Gene Therapy

Notice is hereby given that the Panel to Assess the NIH Investment in Research on Gene Therapy, a fact-finding group reporting to the Advisory Committee to the Director (ACD), National Institutes of Health (NIH), will convene two regional meetings to provide the Panel with an opportunity to hear presentations from researchers regarding activities relevant to gene therapy. The first meeting will be held at Building 31C, Conference Room 10, National Institutes of Health, Bethesda, Maryland 20892, on July 13, 1995. The second meeting will be held at the Sir Francis Drake Hotel on Union Square, 450 Powell Street, San Francisco, California 94102, on August 17, 1995. These meetings will begin at approximately 9:30 a.m. and will end at approximately 5 p.m.

The goal of the Panel is to make recommendations to the ACD about the scientific areas that NIH should emphasize and the funding mechanisms that should be employed in order best to advance the development of gene therapy.

Written statements will be accepted and provided to the Panel prior to the meetings. Statements should be sent to Judith H. Greenberg, Ph.D., National Institutes of Health, Natcher Building, Room 2AS.19H, 45 Center Drive MSC 6200, Bethesda, Maryland 20892–6200, or via e-mail at greenbej@gm1.nigms.nih.gov or fax at (301) 480–2228.

Individuals who plan to attend one of the regional meetings and need special assistance, such as sign language interpretation or other special accommodations, should contact the person named below in advance of the meeting.

Attendance may be limited to seat availability. If you plan to attend the meeting as an observer or if you wish additional information, please contact Ms. Janice Ramsden, National Institutes of Health, Shannon Building, Room 235, 1 Center Drive MSC 0159, Bethesda, Maryland 20892–0159, telephone (301) 496–0959, fax (301) 496–7451, e-mail address ramsdenj@aow.nih.gov by July 7 for the Bethesda meeting and August 11 for the San Francisco meeting.

Dated: June 22, 1995.

Ruth L. Kirschstein,

Deputy Director, National Institutes of Health.

[FR Doc. 95–16234 Filed 6–30–95; 8:45 am]

BILLING CODE 4140–01–P

National Institute on Deafness and Other Communication Disorders; Closed Meeting

Pursuant to Section 10(d) of the Federal Advisory Committee Act, as amended (5 U.S.C. Appendix 2), notice is hereby given of the following meeting:

Name of Committee: Ad Hoc Hearing and Hearing Impairment Subcommittee of the National Deafness and Other Communication Disorders Advisory Council.

Date: July 20, 1995.

Time: 1–4 p.m. (telephone conference).

Place: National Institutes of Health, Building, 31C, Conference Room 9, 9000 Rockville Pike, Bethesda, Maryland 20892.

Contact Person: Mr. Baldwin Wong, Program Analyst, NIDCD/PPHRB, 31 Center Drive, MSC 2320, Room 3C–35, Bethesda, Maryland 20892–2320, (301) 496–7243.

Purpose: To recommend individuals to serve on a scientific panel to update the hearing and hearing impairment section of the Research Plan.

The meeting will be closed in accordance with the provisions set forth in sec. 552b)(c)(6), Title 5, U.S.C. These discussions could reveal personal information concerning these individuals, the disclosure of which would constitute a clearly unwarranted invasion of personal privacy.

(Catalog of Federal Domestic Assistance Program No. 93.173, Biological Research Related to Deafness and Communication Disorders)

Dated: June 26, 1995.

Susan K. Feldman,

Committee Management Officer, NIH.

[FR Doc. 95–16231 Filed 6–30–95; 8:45 am]

BILLING CODE 4140–01–M

Division of Research Grants; Closed Meetings

Pursuant to Section 10(d) of the Federal Advisory Committee Act, as amended (5 U.S.C. Appendix 2), notice is hereby given of the following Division of Research Grants Special Emphasis Panel (SEP) meetings:

Purpose/Agenda: To review individual grant applications.

Name of SEP: Behavioral and Neurosciences.

Date: July 13, 1995.

Time: 12:00 noon.

Place: Embassy Suites Hotel, Washington, DC.

Contact Person: Dr. Anita Sostek, Scientific Review Administrator, 6701 Rockledge Drive, Room 5202, Bethesda, MD 20892, (301) 435–1260.

Name of SEP: Multidisciplinary Sciences.

Date: July 14, 1995.

Time: 1:00 p.m.

Place: NIH, Rockledge II, Room 5210, Telephone Conference.

Contact Person: Dr. Nadarajen Vydelingum, Scientific Review Admin. 6701 Rockledge Drive, Room 5210, Bethesda, MD 20892, (301) 435–1176.

Name of SEP: Microbiological and Immunological Sciences.

Date: July 17, 1995.

Time: 1:00 p.m.

Place: NIH, Rockledge II, Room 4200, Telephone Conference.

Contact Person: Dr. Gil Meir, Scientific Review Administrator, 6701 Rockledge Drive, Room 4200, Bethesda, MD 20897, (301) 435–1219.

Name of SEP: Microbiological and Immunological Sciences.

Date: July 18, 1995.

Time: 10:00 a.m.

Place: NIH, Rockledge II, Room 4180, Telephone Conference.

Contact Person: Dr. Tim Henry, Scientific Review Administrator, 6701 Rockledge Drive,

Room 4180, Bethesda, MD 20892, (301) 435–1147.

Name of SEP: Microbiological and Immunological Sciences.
Date: July 18, 1995.
Time: 2:00 p.m.
Place: NIH, Rockledge II, Room 4180, Telephone Conference.
Contact Person: Dr. Tim Henry, Scientific Review Administrator, 6701 Rockledge Drive, Room 4180, Bethesda, MD 20892, (301) 435–1147.

Name of SEP: Microbiological and Immunological Sciences.
Date: July 19, 1995.
Time: 10:00 a.m.
Place: NIH, Rockledge II, Room 4180, Telephone Conference.
Contact Person: Dr. Tim Henry, Scientific Review Administrator, 6701 Rockledge Drive, Room 4180, Bethesda, MD 20892, (301) 435–1147.

Name of SEP: Microbiological and Immunological Sciences.
Date: July 19, 1995.
Time: 2:00 p.m.
Place: NIH, Rockledge II, Room 4180, Telephone Conference.
Contact Person: Dr. Tim Henry, Scientific Review Administrator, 6701 Rockledge Drive, Room 4180, Bethesda, MD 20892, (301) 435–1147.

Name of SEP: Clinical Sciences.
Date: October 2–3, 1995.
Time: 8:30 a.m.
Place: Holiday Inn, Bethesda, MD.
Contact Person: Dr. Gertrude McFarland, Scientific Review Admin., 6701 Rockledge Drive, Room 4110, Bethesda, MD 20892, (301) 435–1284.

Purpose/Agenda: To review Small Business Innovation Research Program grant applications.

Name of SEP: Multidisciplinary Sciences.
Date: July 24–25, 1995.
Time: 8:30 a.m.
Place: Holiday Inn, Chevy Chase, MD.
Contact Person: Dr. Anthony Carter, Scientific Review Admin., 6701 Rockledge Drive, Room 5108, Bethesda, MD 20892, (301) 435–1167.

Name of SEP: Clinical Sciences.
Date: December 11–12, 1995.
Time: 8:30 a.m.
Place: Holiday Inn, Bethesda, MD.
Contact Person: Dr. Gertrude McFarland, Scientific Review Admin., 6701 Rockledge Drive, Room 4110, Bethesda, MD 20892, (301) 435–1284.

The meetings will be closed in accordance with the provisions set forth in secs. 552b(c)(4) and 552b(c)(6), Title 5, U.S.C. Applications and/or proposals and the discussions could reveal confidential trade secrets or commercial property such as patentable material and personal information concerning individuals associated with the applications and/or proposals, the disclosure of which would constitute a clearly unwarranted invasion of personal privacy.

This notice is being published less than 15 days prior to the meeting due to the urgent need to meet timing limitations imposed by the grant review cycle.

(Catalog of Federal Domestic Assistance Program Nos. 93.306, 93.333, 93.337, 93.393–93.396, 93.837–93.844, 93.846–93.878, 93.892, 93.893, National Institutes of Health, HHS)

Dated: June 26, 1995.

Susan K. Feldman,

Committee Management Officer, NIH.

[FR Doc. 95–16232 Filed 6–30–95; 8:45 am]

BILLING CODE 4140–01–M

Public Health Service

National Toxicology Program (NTP) Board of Scientific Counselors' Meetings; Announcement of NTP Draft Technical Reports Projected for Public Review From June 1995 Through Summer 1998

To earlier inform the public and allow interested parties to comment or obtain information on long-term toxicology and carcinogenesis studies prior to public peer review, the National Toxicology Program (NTP) again publishes in the **Federal Register** a current listing of draft Technical Reports projected for evaluation by the NTP Board of Scientific Counselors' Technical Reports Review Subcommittee during their next seven meetings from June 1995 through the summer of 1998. We plan to continue updating the listing with announcements in the **Federal Register** once or twice a year. The next meeting dates are June 20–21 and December 5–6, 1995. Specific dates for 1996, 1997, and 1998 meetings will be established at a later time.

The attached Table 1 lists draft Technical Reports for long-term studies on chemicals within known or approximate dates of reviews and includes Chemical Abstracts Service (CAS) registry numbers, primary use, route of administration, species, exposure levels, and NTP report numbers (if assigned).

Technical Reports of short-term toxicity studies are currently reviewed by mail; however, they may be reviewed in open meetings when necessary. The attached Table 2 lists the draft Technical Reports of short-term toxicity studies tentatively projected for review by mail from May 1995 to October 1998 and also includes Chemical Abstracts Service (CAS) registry numbers, primary use, route of administration, species, exposure levels, and NTP report numbers (if assigned).

Those interested in having more information about any of the studies listed in this announcement should contact Central Data Management as early as possible by telephone or by mail at: MD-A0–01, NIEHS, P.O. Box 12233, Research Triangle Park (RTP), North Carolina 27709 (919/541–3419). The program would welcome receiving toxicology and carcinogenesis data from completed, ongoing or planned studies by others as well as current production data, human exposure information, and use and use patterns.

The Executive Secretary, Dr. Larry G. Hart, P.O. Box 12233, Research Triangle Park, North Carolina 27709, telephone 919/541–3971, FAX 919/541–0719 will furnish final agendas and other program information prior to a meeting, and summary minutes subsequent to a meeting.

Dated: June 16, 1995.

Kenneth Olden,

Director, National Toxicology Program.

TABLE 1.—SUMMARY DATA FOR TECHNICAL REPORTS SCHEDULED FOR REVIEW AT THE MEETING OF THE NTP BOARD OF SCIENTIFIC COUNSELORS' TECHNICAL REPORTS REVIEW SUBCOMMITTEE FROM JUNE 20, 1995 THROUGH SUMMER 1998

Chemical name/cas No.	Use	Route	Species	Exposure levels	NTP Tr No.
Chemicals Tentatively Scheduled for Peer Review June 20–21, 1995					
BUTYL BENZYL PHTHALATE; 85–68–7	PLAS	FEED	RR	MR: 0, .3%, .6%, OR 1.2%; 60/GROUP FR: 0, .6%, 1.2%, OR 2.4%; 60/GROUP.	458
T-BUTYLHYDROQUINONE; 1948–33–0	FOOD	FEED	RMR	R&M: 0, 0.125, 0.25, OR 0.5% IN FEED; 70 RATS, 60 MICE.	459
CODEINE; 76–57–3	PHAR	FEED	RM	R: 0, 400, 800, OR 1600 M: 0, 750, 1500, OR 3000 PPM; 60/GROUP.	455

TABLE 1.—SUMMARY DATA FOR TECHNICAL REPORTS SCHEDULED FOR REVIEW AT THE MEETING OF THE NTP BOARD OF SCIENTIFIC COUNSELORS' TECHNICAL REPORTS REVIEW SUBCOMMITTEE FROM JUNE 20, 1995 THROUGH SUMMER 1998—Continued

Chemical name/cas No.	Use	Route	Species	Exposure levels	NTP Tr No.
1,2-DIHYDRO-2,2,4-TRIMETHYLQUINOLINE (MONOMER); 147–47–7.	RUBR	SP	RMM	RATS: 0, 60, OR 100 MG/KG MICE: 0, 6, OR 10 MG/KG (CORE).	455
1,2-DIHYDRO-2,2,4-TRIMETHYLQUINOLINE (MONOMER); 147–47–7.	RUBR	SP	RM	RATS: 0, 36, 60, OR 100 MG/KG MICE: 0, 3.6, 6.0, OR 10.0 MG/KG.	456
FEED RESTRICTION STUDIES			RM	Effect of dietary restriction on toxicology and carcinogenesis studies in F344/N rats and B6C3F$_1$ mice.	460
SALICYLAZOSULFAPYRIDINE; 599–79–1	PHAR	GAV	RM	R: 84, 168, OR 337.5 MG/KG; 70/GROUP M: 675, 1350, OR 2700 MG/KG; 60/GROUP.	457
SCOPOLAMINE HYDROBROMIDE TRIHYDRATE; 6533–68–2.	PHAR	GAV	RMM	R&M: 0,1,5, OR 25 MG/KG; 70/GROUP DIET RESTRICTION MICE: 0 OR 25 MG/KG;70/GROUP.	445
Chemicals Tentatively Scheduled for Peer Review December 5–6, 1995					
D & C YELLOW NO. 11; 8003–22–3	DYE	FEED	R	RATS: 0, 0.05, 0.17, OR 0.5%; 60/GROUP	.....
MOLYBDENUM TRIOXIDE; 1313–27–5	METL	INHAL	RM	R&M: 10, 30, OR 100 MG/M3; 50/SEX/SPECIES/GROUP.	.....
NITROMETHANE; 75–52–5	FUEL	INHAL	RM	R: 0, 94, 188, OR 375 PPM; 50/GROUP M: 0, 188, 375, OR 750 PPM; 50/GROUP.	.....
PHENOLPHTHALEIN; 77–09–8	PHAR	FEED	RM	R: 0, 1.2, 2.5, OR 5%; M: 0, 0.3, 0.6, OR 1.2% IN FEED (50/SEX/SPECIES/GROUP).	.....
SODIUM XYLENESULFONATE; 1300–72–7	DTRG	SP	RM	R: 0, 60, 120, OR 240 MG/KG M: 0, 182, 364, OR 727 MG/KG (50/SEX/GROUP).	.....
TETRAFLUOROETHYLENE; 116–14–3	FOOD	INHAL	RM	MICE & FR: 0, 312, 625, OR 1250 MR: 0, 156, 312, OR 625 PPM; 50/GROUP.	.....
Chemicals Tentatively Scheduled for Peer Review Summer 1996					
ETHYLBENZENE; 100–41–4	RUBR	INHAL	RM	R&M: 0, 75, 250, OR 750 PPM (50/SEX/SPECIES/GROUP).	.....
INTERFERON AD+3'-AZIDO-3'-DEOXYTHYMIDINE (AIDS INITIATIVE) INTAZTCOMB.	PHAR	SC&GV	MM	DUAL ROUTES WITH BOTH COMPOUNDS: AZT: 0, 30, 60, OR 120 (GAV) MG/KG; IFN: 500 OR 5000 UNITS 3X/WEEK.	.....
OXAZEPAM; 604–75–1	PHAR	FEED	R	0, 625, 1250, 2500, 5000, OR 10000 PPM; 50/SEX/GROUP.	
Chemicals Tentatively Scheduled for Peer Review Fall 1996					
DIETHANOLAMINE; 111–42–2	TEXL	SP	RM	MR: 0, 16, 32, OR 64 MG/KG; FR: 0, 8, 16, OR 32 MG/KG; MICE: 0, 40, 80, OR 160 MG/KG (50/SEX/SPECIES/GROUP).	.....
TETRAHYDROFURAN; 109–99–9	SOLV	INHAL	RM	R&M: 0, 200, 600, OR 1800 PPM (50/SEX/SPECIES/GROUP).	.....
THEOPHYLLINE; 58–55–9	PHAR	GAV	RM	R: 7.5, 25, OR 75 MG/KG; 50/GROUP FM: 7.5, 25, OR 75 MG/KG; 50/GROUP MM: 15, 50, OR 150 MG/KG; 50/GROUP.	.....
Chemicals Tentatively Scheduled for Peer Review Summer 1997					
1-CHLORO-2-PROPANOL, TECHNICAL; 127–00–4	INTR	WATER	RM	R: 0, 150, 325, OR 650 PPM M: 0, 250, 500, OR 1000 PPM (50/SEX/GROUP).	.....
PYRIDINE; 110–86–1	SOLV	WATER	RMR	R: 0, 100, 200, OR 400 PPM MM: 0, 250, 500, OR 1000 PPM FM: 125, 250, OR 500 PPM MWR: 0, 100, 200, OR 400 PPM (50/SEX/GROUP).	.....
Chemicals Tentatively Scheduled for Peer Review Fall 1997					
COCONUT OIL ACID DIETHANOLAMINE CONDENSATE; 68603–42–9.	TEXL	SP	RM	R: 0, 50, OR 100 MG/KG M: 0, 100, OR 200 MG/KG (50 SEX/SPECIES/GROUP).	.....
FURFURYL ALCOHOL; 98–00–0	FOOD	INHAL	RM	R&M: 0, 2, 8, OR 32 PPM (50/SEX/SPECIES/GROUP).	.....
LAURIC ACID DIETHANOLAMINE CONDENSATE; 120–40–1.	DTRG	SP	RM	R: 0, 50, OR 100 MG/KG M: 0, 100, OR 200 MG/KG (50/SEX/SPECIES/GROUP).	.....

TABLE 1.—SUMMARY DATA FOR TECHNICAL REPORTS SCHEDULED FOR REVIEW AT THE MEETING OF THE NTP BOARD OF SCIENTIFIC COUNSELORS' TECHNICAL REPORTS REVIEW SUBCOMMITTEE FROM JUNE 20, 1995 THROUGH SUMMER 1998—Continued

Chemical name/cas No.	Use	Route	Species	Exposure levels	NTP Tr No.
OLEIC ACID DIETHANOLAMINE CONDENSATE; 93–83–4.	COS	SP	RM	R: 0, 50, OR 100 MG/KG; 50/SEX/GROUP M: 0, 15, OR 30 MG/KG; 55/SEX/GROUP.	.....
PENTACHLOROPHENOL, PURIFIED; 87–86–5	PEST	FEED	R	R: 0, 200, 400, OR 600 PPM; 50/SEX/GROUP—1000 PPM STOP STUDY (60/SEX).	.....
POLYVINYL ALCOHOL; 9002–89–5	PHAR	IVAG	M	25% PVA, VEHICLE, UNTREATED; 100/GROUP	.....
PRIMACLONE; 125–33–7	PHAR	FEED	RM	M: 0, 0.03, 0.06, OR 0.13% R: 0, 0.06, 0.13, OR 0.25% (50/SEX/SPECIES).	.....
Chemicals Tentatively Scheduled for Peer Review Summer 1998					
ETHYLENE GLYCOL MONOBUTYL ETHER (EGMBE); 111–76–2.	SOLV	INHAL	RM	R: 0, 31, 62.5, OR 125 PPM M: 0, 62.5, 125, OR 250 PPM; 50/SEX/SPECIES.	.....
GALLIUM ARSENIDE; 1303–00–0	ELEC	INHAL	RM	R: 0, 0.01, 0.1, OR 1.0 MG/M3; 50/SEX/GROUP M: 0, 0.1, 0.5, OR 1.0 MG/M3; 50/SEX/GROUP.	.....
ISOBUTENE; 115–11–7	RUBR	INHAL	RM	R&M: 0, 500, 2000, OR 8000 PPM (50/SEX/SPECIES/GROUP).	.....
ISOPRENE; 78–79–5	RUBR	INHAL	RM	R: 0, 220, 700, OR 7000 PPM; 50/SEX/GROUP	.....
METHYLEUGENOL; 93–15–2	FOOD	GAV	RM	R&M: 0, 37, 75, OR 150 MG/KG (50/SEX/SPECIES/GROUP).	.....
OXYMETHOLONE; 434–07–1	PHAR	GAV	RM	MR: 0, 3, 30, OR 150 MG/KG; FR: 0, 3, 30, OR 100 MG/KG.	.....

TABLE 2.—SHORT-TERM TOXICITY STUDIES SCHEDULED FOR PEER REVIEW BY THE NTP BOARD OF SCIENTIFIC COUNSELORS' TECHNICAL REPORTS REVIEW SUBCOMMITTEE FROM MAY 1995 THROUGH OCTOBER 1998

Chemical name/cas No.	Use	Route	Species	Exposure levels	NTP Tox No.
Short-Term Toxicity Studies Scheduled for Peer Review May 1995					
Halogenated Ethanes Class Study:					
1,2-DICHLORO-1,1-DIFLUOROETHANE; 1649–08–7.	IND	GAV	R	MALE RATS 0, 0.62, 1.24 MMOL/KG/DAY; 5/GRP	45
1,2-DIFLUROR-1,1,2,2-TETRACHLOROETHANE; 76–12–0.	SOLV	GAV	R	MALE RATS 0, 0.62, 1.24 MMOL/KG/DAY; 5/GRP	45
HEXACHLOROETHANE; 67–72–1	SOLV	GAV	R	MALE RATS 0, 0.62, 1.24 MMOL/KG/DAY; 5/GRP	45
PENTABROMOETHANE; 75–95–6	IND	GAV	R	MALE RATS 0, 0.62, 1.24 MMOL/KG/DAY; 5/GRP	45
PENTACHLOROETHANE; 76–01–7	SOLV	GAV	R	MALE RATS 0, 0.62, 1.24 MMOL/KG/DAY; 5/GRP; FEMALE RATS 0, 1,24 MMOL/KG/DAY;.	45
1,1,1,2-TETRABROMOETHANE; 630–16–0	IND	GAV	R	MALE RATS 0, 0.62, 1.24 MMOL/KG/DAY; 5/GRP	45
1,1,2,2-TETRABROMOETHANE; 79–27–6	FLAM	GAV	R	MALE RATS 0, 0.62, 1.24 MMOL/KG/DAY; 5/GRP	45
1,1,1,2-TETRACHLOROETHANE; 630–20–6	INTR	GAV	R	MALE RATS 0, 0.62, 1.24 MMOL/KG/DAY; 5/GRP	45
1,1,2,2-TETRACHLOROETHANE; 79–34–5	SOLV	GAV	R	MALE RATS 0, 0.62, 1.24 MMOL/KG/DAY; 5/GRP	45
1,1,1-TRICHLOROETHANE; 71–55–6	SOLV	GAV	R	MALE RATS 0, 0.62, 1.24 MMOL/KG/DAY; 5/GROUP.	45
1,1,1-TRICHLORO-2,2,2-TRIFLUOROETHANE; 354–58–5.	IND	GAV	R	MALE RATS 0, 0.62, 1.24 MMOL/KG/DAY; 5/GRP	45
METHYL ETHYL KETOXIME; 96–29–7	PNT	WATER	RM	R&M: 0, 625, 1250, 2500, 5000, OR 10000 PPM; 10/GROUP.	51
Short-Term Toxicity Studies Scheduled for Peer Review June 1995					
1,4-BUTANEDIOL; 110–63–4	INTR			Review of metabolism and disposition studies and prediction of lack of carcinogenicity in long-term studies..	54
METHAPYRILENE HYDROCHLORIDE; 135–23–9	PHAR	FEED	R	MALE RATS: 0, 50, 100, 250, 1000 PPM; 40/GRP	46
O-NITROTOLUENE; 88–72–2	RUBR	FEED	R	MALE R: 0, 0 ALTERED MICROFLORA 20/GRP; 5000 PPM 60/GRP; 5000 PPM ALTERED MICROFLORA 40/GRP.	44
O-TOLUIDINE HYDROCHLORIDE; 636–21–5	DYE	FEED	R	O AND 0 ALTERED MICROFLORA; 20/GRP; 5000 PPM; 60/GRP.	44
1,1,1-TRICHLOROETHANE; 71–55–6	SOLV	MICRO	RM	R&M: 0, 0.5, 1.0, 2.0, 4.0, AND 8.0 % (10/S/S)	41
URETHANE; 51–79–6	PNT	WATER	RM	R&M: (DEIONIZED WATER VEHICLE) 0.011, 0.033, 0.11, 0.33, OR 1.0 G/100 ML.	52

TABLE 2.—SHORT-TERM TOXICITY STUDIES SCHEDULED FOR PEER REVIEW BY THE NTP BOARD OF SCIENTIFIC COUNSELORS' TECHNICAL REPORTS REVIEW SUBCOMMITTEE FROM MAY 1995 THROUGH OCTOBER 1998—Continued

Chemical name/cas No.	Use	Route	Species	Exposure levels	NTP Tox No.
URETHANE + ETHANOL (COMBINATION) URETHCOMB.	PNT	WATER	RM	R&M:(WITH 5% ETHANOLIN WATER) 0.011, 0.033, 0.11, 0.33, OR 1.0 G/100 ML.	52
Short-Term Toxicity Studies Scheduled for Peer Review August 1995					
CIS & TRANS 1,2-DICHLOROETHYLENE; 540–59–0	SOLV	MICRO	RM		55
CIS-1,2-DICHLOROETHYLENE; 156–59–2	SOLV	MICRO	RM		55
TRANS-1,2-DICHLOROETHYLENE; 156–60–5	SOLV	MICRO	RM		55
TRANS-1,2-DICHLOROETHYLENE; 156–60–5	SOLV	GAV	RM		55
Short-Term Toxicity Studies Scheduled for Peer Review November 1995					
M-CHLOROANILINE; 108–42–9	INTR	GAV	RM	R&M 0, 10, 20, 40, 80, 160 MG/KG, 20/GRP (RATS); 10/GRP (MICE).	43
O-CHLOROANILINE; 95–51–2	DYE	GAV	RM	R&M 0, 10, 20, 40, 80, & 160 MG/KG; 20/GRP (RATS);10/GRP (MICE).	43
Short-Term Toxicity Studies Scheduled for Peer Review March 1996					
3,3',4,4'-TETRACHLOROAZOXYBENZENE; 21232–47–3.	COMT	GAV	RM	R&M: 0, 0.1, 1.0, 3.0, 10, OR 30 MG/KG BODY WEIGHT (M&F 10/GROUP).	.....
Short-Term Toxicity Studies Scheduled for Peer Review June 1996					
AZT+METHADONE HCL (AIDS) AZTMETHCOMB	PHAR	GAV	MM	AZT: 200, 400, OR 800 MG/KG/DAY WITH METHADONE HCL: 5, 15, OR 30 MG/KG/DAY.	.....
2',3'-DIDEOXYCYTIDINE (AIDS INITIATIVE); 7481–89–2.	PHAR	GAV	MM	FEMALE MICE ONLY: 500, 1000 MG/KG/DAY	.....
3,3',4,4'-TETRACHLOROAZOBENZENE; 14047–09–7.	HERB	GAV	RM	R&M: 0, 0.1, 1.0, 3.0, 10, OR 30 MG/KG BODY WEIGHT (M&F; 10/GROUP).	.....
1,1,2,2-TETRACHLOROETHANE; 79–34–5	SOLV	MICRO	RM		.....
1,1,2,2-TETRACHLOROETHANE; 79–34–5	SOLV	GAV	RM		.....
1,1,2,2-TETRACHLOROETHANE; 79–34–5	SOLV	MICRO	RM	R&M; R:UNTREATED CONTROL, VEHICLE CONTROL, 18, 37, 75, 150, OR 300 MG/KG BODY WT/DAY; M:UNTREATED CONTROL, VEHICLE CONTROL, 88, 175, 350, 700, OR 1400 MG/KG BODY WT/DAY; 10/GROUP/SEX.	.....
Short-Term Toxicity Studies Scheduled for Peer Review October 1998					
INDIUM PHOSPHIDE; 22398–80–7	ELEC	INHAL	RM	R&: 0, 1, 3, 10, 30, OR 100 MG/M3; 10/SEX/GROUP.	.....
MAGNETIC FIELDS (EMF); ELECTROMAG	ELEC	WB	RM	60 HZ MAGNETIC FIELDS—20 MG, 2 G, 10 G CONTINUOUS AND 10 G INTERMITTENT; 10/GROUP.	.....
RETROVIRAL VECTORS RETROVIRVECT	PHAR	IP/IJ	RM	VARIOUS REGIMENS AND CONTROLS INCLUDED.	.....

Abbreviations used in this report:
USE Primary Use Category:
COMT Contaminates and/or Impurities
COSM Cosmetics, Perfumes, Fragrances, Hair Preparations, Skin Lotions
DTRG Detergents and Cleansers
DYE As or in Dyes, Inks, and Pigments
ELEC In Electrical and/or Dielectric Systems
FLAM Flame Retardants
FOOD Food, Beverages, or Additives
FUEL As or in Fuel or Oil Products
HERB Herbicide(s)
IND Industrial Uses
INTR Chemical Intermediate or Catalyst
METL Metals or in Metal Products
PEST Pesticides, General or Unclassified
PHAR Pharmaceuticals or Intermediates
PLAS As or in Plastics
PNT Paint Ingredient
RUBR Rubber Chemical
SOLV Vehicles and Solvents
TEXL In Manufacture of Textiles
ROUTE Route of Administration:

FEED Dosed-Feed
GAV Gavage
INHAL Inhalation
IP/IJ Intraperitoneal Injection
IVAG Intravaginal
MICRO Microencapsulation in Feed
SC&GV Subcutaneous Inj. + Gavage
SP Topical
WATER Dosed-Water
WB Whole Body Exposure
SPEC Species:
R=Rats
M=Mice

[FR Doc. 95–16235 Filed 6–30–95; 8:45 am]

BILLING CODE 4140–01–P

Public Health Service; Agency for Toxic Substances and Disease Registry

Statement of Organization, Functions, and Delegations of Authority

Part H, Public Health Service (PHS), Chapter HT (Agency for Toxic Substances and Disease Registry), of the Statement of Organization, Functions, and Delegations of Authority for the Department of Health and Human Services (50 FR 25129–25130, dated June 17, 1985, as amended most recently at 59 FR 29815–16, dated June 9, 1994) is amended to reflect organizational changes within the Agency for Toxic Substances and Disease Registry (ATSDR) that will merge the activities of the Office of Information Resources Management with the Office of Program Operations and Management within the Office of the Assistant Administrator, ATSDR.

Section HT–B, Organization and Functions, is hereby amended as follows:

Delete in its entirety the functional statement for the *Office of Program Operations and Management (HTB1)* and insert the following:

(1) Plans, manages, directs, and conducts the administrative and management operations of the agency; (2) reviews the effectiveness and efficiency of administration and operation for all Agency programs; (3) develops and directs systems for human resource management, financial services, procurement requisitioning, travel authorization, and information resources management; (4) provides and coordinates services for the extramural awards activities of the Agency; (5) formulates and executes the budget; (6) develops and directs a system for cost recovery; (7) coordinates Freedom of Information Act requests.

After the functional statement for the *Program Support Branch (HTB13),* insert the following:

Information Resources Management Branch (HTB14). (1) Coordinates the development of ATSDR information resources management plans; (2) coordinates the acquisition, development, installation, management, support, and evaluation of ATSDR-wide information technology, systems, and services; (3) develops and implements policies and procedures relating to information resources management and support services.

Delete in their entirety the title and functional statement for the *Office of Information Resources Management (HTB5).*

Effective Date: June 16, 1995.

David Satcher,

Administrator, Agency for Toxic Substances and Disease Registry.

[FR Doc. 95–16217 Filed 6–30–95; 8:45 am]

BILLING CODE 4160–70–M

Centers for Disease Control and Prevention; Statement of Organization, Functions, and Delegations of Authority

Part H, Chapter HC (Centers for Disease Control and Prevention) of the Statement of Organization, Functions, and delegations of Authority of the Department of Health and Human Services (45 FR 67772–76, dated October 14, 1980, and corrected at 45 FR 69296, October 20, 1980, as amended most recently at 60 FR 17792–17795, dated April 7, 1995) is amended to reflect the retitle and modify the functional statements of the Division of HIV/AIDS and the Division of STD/HIV Prevention, National Center for Prevention Services.

Delete the title and functional statement for the *Division of STD/HIV Prevention (HCM4)* and insert the following:

Division of Sexually Transmitted Disease Prevention (HCM4). (1) In cooperation with other CDC components, administers operational programs for the prevention of sexually transmitted diseases (STD); (2) provides consultation, training, statistical, promotional, educational, epidemiological and other technical services to assist State and local health departments in the planning, development, implementation, evaluation and overall improvement of STD prevention programs; (3) supports a nationwide framework for effective surveillance of STDs other than HIV; (4) conducts behavioral, clinical, epidemiological, preventive health services, and operational research into factors affecting the prevention and control of STD; (5) provides leadership and coordinates, in collaboration with other Center components, research and prevention activities that focus on STD and HIV interaction; (6) promotes linkages between health department STD programs and other governmental and nongovernmental partners who are vital to effective STD prevention efforts; (7) provides technical supervision for Division State and local assignees.

Delete the title and functional statement for the *Division of HIV/AIDS(HCM7)* and insert the following:

Division of HIV/AIDS Prevention (HCM7). (1) In cooperation with other CDC components, administers operational programs for the prevention of human immunodeficiency virus/acquired immunodeficiency syndrome (HIV/AIDS); (2) provides consultation, training, statistical, promotional, educational, epidemiological, and other technical services to assist State and local health departments, as well as national, State, and local nongovernmental organizations, in the planning, development, implementation, and overall improvement of HIV prevention programs; (3) conducts epidemiologic, surveillance, behavioral, etiologic, communications, and operational research into factors affecting the prevention of HIV/AIDS; (4) develops recommendations and guidelines on the prevention of HIV/AIDS and associated illnesses; (5) monitors sentinel surveillance of HIV infection and infectious diseases and other complications of HIV/AIDS, as well as surveillance of risk behaviors associated with HIV transmission; (6) conducts national and international HIV/AIDS

surveillance, epidemiologic investigations, and studies to determine risk factors and transmission patterns of HIV/AIDS; (7) evaluates prevention and control activities in collaboration with other CDC components; (8) provides assistance and consultation on issues related to epidemiology surveillance, programmatic support, research, evaluation methodologies, and fiscal and grants management to State and local health departments, nongovernmental organizations, national organizations, and other research institutions; (9) promotes linkages between health department HIV/AIDS programs and other governmental and nongovernmental partners who are vital to effective HIV/AIDS prevention efforts; (10) provides consultation to other PHS agencies, medical institutions, private physicians, and international organizations or agencies; (11) provides information to the scientific community and the general public through publications and presentations; (12) works closely with National Center for Infectious Diseases on HIV/AIDS surveillance and epidemiologic investigations that require laboratory collaboration, and on activities related to the investigation and prevention of HIV-related to the investigation and prevention of HIV-related opportunistic infections; (13) implements national HIV/AIDS prevention communications programs and develops strategic communications activities and services at the national level to inform and educate the American public about HIV/AIDS surveillance and prevention activities.

Dated: June 14, 1995.

Martha Katz,

Acting Director, Centers for Disease Control and Prevention.

[FR Doc. 95–16216 Filed 6–30–95; 8:45 am]

BILLING CODE 4160–18–M

Substance Abuse and Mental Health Services Administration

Current List of Laboratories Which Meet Minimum Standards To Engage in Urine Drug Testing for Federal Agencies and Laboratories That Have Withdrawn From the Program

AGENCY: Substance Abuse and Mental Health Services Administration, HHS. (Formerly: National Institute on Drug Abuse, ADAMHA, HHS).

ACTION: Notice.

SUMMARY: The Department of Health and Human Services notifies Federal agencies of the laboratories currently certified to meet standards of Subpart C of Mandatory Guidelines for Federal Workplace Drug Testing Programs (59 FR 29916, 29925). A similar notice listing all currently certified laboratories will be published during the first week of each month, and updated to include laboratories which subsequently apply for and complete the certification process. If any listed laboratory's certification is totally suspended or revoked, the laboratory will be omitted from updated lists until such time as it is restored to full certification under the Guidelines.

If any laboratory has withdrawn from the National Laboratory Certification Program during the past month, it will be identified as such at the end of the current list of certified laboratories, and will be omitted from the monthly listing thereafter.

FOR FURTHER INFORMATION CONTACT: Mrs. Giselle Hersh, Division of Workplace Programs, Room 13A–54, 5600 Fishers Lane, Rockville, Maryland 20857; Tel.: (301) 443–6014.

SUPPLEMENTARY INFORMATION: Mandatory Guidelines for Federal Workplace Drug Testing were developed in accordance with Executive Order 12564 and section 503 of Pub. L. 100–71. Subpart C of the Guidelines, ''Certification of Laboratories Engaged in Urine Drug Testing for Federal Agencies,'' sets strict standards which laboratories must meet in order to conduct urine drug testing for Federal agencies. To become certified an applicant laboratory must undergo three rounds of performance testing plus an on-site inspection. To maintain that certification a laboratory must participate in a quarterly performance testing program plus periodic, on-site inspections.

Laboratories which claim to be in the applicant stage of certification are *not* to be considered as meeting the minimum requirements expressed in the HHS Guidelines. A laboratory must have its letter of certification from SAMHSA, HHS (formerly: HHS/NIDA) which attests that it has met minimum standards.

In accordance with Subpart C of the Guidelines, the following laboratories meet the minimum standards set forth in the Guidelines:

Aegis Analytical Laboratories, Inc., 624 Grassmere Park Rd., Suite 21, Nashville, TN 37211, 615–331–5300

Alabama Reference Laboratories, Inc., 543 South Hull St., Montgomery, AL 36103, 800–541–4931/205–263–5745

American Medical Laboratories, Inc., 14225 Newbrook Dr., Chantilly, VA 22021, 703–802–6900

Associated Pathologists Laboratories, Inc., 4230 South Burnham Ave., Suite 250, Las Vegas, NV 89119–5412, 702–733–7866

Associated Regional and University Pathologists, Inc. (ARUP), 500 Chipeta Way, Salt Lake City, UT 84108, 801–583–2787

Baptist Medical Center—Toxicology Laboratory, 9601 I–630, Exit 7, Little Rock, AR 72205–7299, 501–227–2783 (Formerly: Forensic Toxicology Laboratory Baptist Medical Center)

Bayshore Clinical Laboratory, 4555 W. Schroeder Dr., Brown Deer, WI 53223, 414–355–4444/800–877–7016

Cedars Medical Center, Department of Pathology, 1400 Northwest 12th Ave., Miami, FL 33136, 305–325–5810

Centinela Hospital Airport Toxicology Laboratory, 9601 S. Sepulveda Blvd., Los Angeles, CA 90045, 310–215–6020

Clinical Reference Lab, 11850 West 85th St., Lenexa, KS 66214, 800–445–6917

CompuChem Laboratories, Inc., 3308 Chapel Hill/Nelson Hwy., Research Triangle Park, NC 27709, 919–549–8263/800–833–3984 (Formerly: CompuChem Laboratories, Inc., A Subsidiary of Roche Biomedical Laboratory, Roche CompuChem Laboratories, Inc., A Member of the Roche Group)

CompuChem Laboratories, Inc., Special Division, 3308 Chapel Hill/Nelson Hwy., Research Triangle Park, NC 27709, 919–549–8263 (Formerly: Roche CompuChem Laboratories, Inc., Special Division, A Member of the Roche Group, CompuChem Laboratories, Inc., Special Division)

CORNING Clinical Laboratories, South Central Division 2320 Schuetz Rd., St. Louis, MO 63146, 800–288–7293 (Formerly: Metropolitan Reference Laboratories, Inc.)

CORNING Clinical Laboratories, 8300 Esters Blvd., Suite 900, Irving, TX 75063, 800–526–0947 (Formerly: Damon Clinical Laboratories, Damon/MetPath)

CORNING Clinical Laboratories Inc., 1355 Mittel Blvd., Wood Dale, IL 60191, 708–595–3888, (Formerly: MetPath, Inc., CORNING MetPath Clinical Laboratories)

CORNING MetPath Clinical Laboratories, One Malcolm Ave., Teterboro, NJ 07608, 201–393–5000 (Formerly: MetPath, Inc.)

CORNING National Center for Forensic Science, 1901 Sulphur Spring Rd., Baltimore, MD 21227, 410–536–1485, (Formerly: Maryland Medical Laboratory, Inc., National Center for Forensic Science)

CORNING Nichols Institute, 7470–A Mission Valley Rd., San Diego, CA 92108–4406, 800–446–4728/619–686–3200, (Formerly: Nichols Institute, Nichols Institute Substance Abuse Testing (NISAT))

Cox Medical Centers, Department of Toxicology, 1423 North Jefferson Ave., Springfield, MO 65802, 800–876–3652/417–836–3093

Dept. of the Navy, Navy Drug Screening Laboratory, Great Lakes, IL Building 38–H, Great Lakes, IL 60088–5223, 708–688–2045/708–688–4171

Diagnostic Services Inc., dba DSI, 4048 Evans Ave., Suite 301, Fort Myers, FL 33901, 813–936–5446/800–735–5416

Doctors Laboratory, Inc., P.O. Box 2658, 2906 Julia Dr., Valdosta, GA 31604, 912–244–4468
Drug Labs of Texas, 15201 I–10 East, Suite 125, Channelview, TX 77530, 713–457–3784
DrugProof, Division of Dynacare/Laboratory of Pathology, LLC, 1229 Madison St., Suite 500, Nordstrom Medical Tower, Seattle, WA 98104, 800–898–0180/206–386–2672, (Formerly: Laboratory of Pathology of Seattle, Inc., DrugProof, Division of Laboratory of Pathology of Seattle, Inc.)
DrugScan, Inc., P.O. Box 2969, 1119 Mearns Rd., Warminster, PA 18974, 215–674–9310
ElSohly Laboratories, Inc., 5 Industrial Park Dr., Oxford, MS 38655, 601–236–2609
General Medical Laboratories, 36 South Brooks St., Madison, WI 53715, 608–267–6267
Harrison Laboratories, Inc., 9930 W. Highway 80, Midland, TX 79706, 800–725–3784/915–563–3300 (formerly: Harrison & Associates Forensic Laboratories)
HealthCare/MetPath, 24451 Telegraph Rd., Southfield, MI 48034, 800–444–0106 ext. 650, (formerly: HealthCare/Preferred Laboratories)
Holmes Regional Medical Center Toxicology Laboratory, 5200 Babcock St., N.E., Suite 107, Palm Bay, FL 32905, 407–726–9920
Jewish Hospital of Cincinnati, Inc., 3200 Burnet Ave., Cincinnati, OH 45229, 513–569–2051
LabOne, Inc., 8915 Lenexa Dr., Overland Park, Kansas 66214, 913–888–3927 (formerly: Center for Laboratory Services, a Division of LabOne, Inc.)
Laboratory Corporation of America, 13900 Park Center Rd., Herndon, VA 22071, 703–742–3100 (Formerly: National Health Laboratories Incorporated)
Laboratory Corporation of America, d.b.a. LabCorp Reference Laboratory, Substance Abuse Division, 1400 Donelson Pike, Suite A–15, Nashville, TN 37217, 615–360–3992/800–800–4522 (Formerly: National Health Laboratories Incorporated, d.b.a. National Reference Laboratory, Substance Abuse Division)
Laboratory Corporation of America, 15305 N.E. 40th St., Redmond, WA 98052, 206–882–3400 (Formerly: Regional Toxicology Services)
Laboratory Corporation of America, 2540 Empire Dr., Winston-Salem, NC 27103–6710, Outside NC: 919–760–4620/800–334–8627/Inside NC: 800–642–0894 (Formerly: National Health Laboratories Incorporated)
Laboratory Corporation of America Holdings, 1120 Stateline Rd., Southaven, MS 38671, 601–342–1286 (Formerly: Roche Biomedical Laboratories, Inc.)
Laboratory Corporation of America Holdings, 69 First Ave., Raritan, NJ 08869, 800–437–4986 (Formerly: Roche Biomedical Laboratories, Inc.)
Laboratory Specialists, Inc., 113 Jarrell Dr., Belle Chasse, LA 70037, 504–392–7961
Marshfield Laboratories, 1000 North Oak Ave., Marshfield, WI 54449, 715–389–3734/800–222–5835
MedExpress/National Laboratory Center, 4022 Willow Lake Blvd., Memphis, TN 38175, 901–795–1515
Medical College Hospitals Toxicology Laboratory, Department of Pathology, 3000 Arlington Ave., Toledo, OH 43699–0008, 419–381–5213
Medlab Clinical Testing, Inc., 212 Cherry Lane, New Castle, DE 19720, 302–655–5227
MedTox Laboratories, Inc., 402 W. County Rd. D, St. Paul, MN 55112, 800–832–3244/612–636–7466
Methodist Hospital of Indiana, Inc., Department of Pathology and Laboratory Medicine, 1701 N. Senate Blvd., Indianapolis, IN 46202, 317–929–3587
Methodist Medical Center Toxicology Laboratory, 221 N.E. Glen Oak Ave., Peoria, IL 61636, 800–752–1835/309–671–5199
MetPath Laboratories, 875 Greentree Rd., 4 Parkway Ctr., Pittsburgh, PA 15220–3610, 412–931–7200 (formerly: Med-Chek Laboratories, Inc., Med-Chek/Damon)
MetroLab-Legacy Laboratory Services, 235 N. Graham St., Portland, OR 97227, 503–413–4512/800–237–7808(x4512)
National Psychopharmacology Laboratory, Inc., 9320 Park W. Blvd., Knoxville, TN 37923, 800–251–9492
National Toxicology Laboratories, Inc., 1100 California Ave., Bakersfield, CA 93304, 805–322–4250
Northwest Toxicology, Inc., 1141 E. 3900 South, Salt Lake City, UT 84124, 800–322–3361
Oregon Medical Laboratories, P.O. Box 972, 722 East 11th Ave., Eugene, OR 97440–0972, 503–687–2134
Pathology Associates Medical Laboratories, East 11604 Indiana, Spokane, WA 99206, 509–926–2400
PDLA, Inc. (Princeton), 100 Corporate Court, So. Plainfield, NJ 07080, 908–769–8500/800–237–7352
PharmChem Laboratories, Inc., 1505–A O'Brien Dr., Menlo Park, CA 94025, 415–328–6200/800–446–5177
PharmChem Laboratories, Inc., Texas Division, 7606 Pebble Dr., Fort Worth, TX 76118, 817–595–0294 (formerly: Harris Medical Laboratory)
Physicians Reference Laboratory, 7800 West 110th St., Overland Park, KS 66210, 913–338–4070/800–821–3627 (formerly: Physicians Reference Laboratory Toxicology Laboratory)
Poisonlab, Inc., 7272 Clairemont Mesa Rd., San Diego, CA 92111, 619–279–2600/800–882–7272
Presbyterian Laboratory Services, 1851 East Third Street, Charlotte, NC 28204, 800–473–6640
Puckett Laboratory, 4200 Mamie St., Hattiesburgh, MS 39402, 601–264–3856/800–844–8378
Scientific Testing Laboratories, Inc., 463 Southlake Blvd., Richmond, VA 23236, 804–378–9130
Scott & White Drug Testing Laboratory, 600 S. 25th St., Temple, TX 76504, 800–749–3788
S.E.D. Medical Laboratories, 500 Walter NE, Suite 500, Albuquerque, NM 87102, 505–848–8800
Sierra Nevada Laboratories, Inc., 888 Willow St., Reno, NV 89502, 800–648–5472
SmithKline Beecham Clinical Laboratories, 7600 Tyrone Ave., Van Nuys, CA 91045, 818–376–2520
SmithKline Beecham Clinical Laboratories, 801 East Dixie Ave., Leesburg, FL 34748, 904–787–9006 (formerly: Doctors & Physicians Laboratory)
SmithKline Beecham Clinical Laboratories, 3175 Presidential Dr., Atlanta, GA 30340, 404–934–9205 (formerly: SmithKline Bio-Science Laboratories)
SmithKline Beecham Clinical Laboratories, 506 E. State Pkwy., Schaumburg, IL 60173, 708–885–2010 (formerly: International Toxicology Laboratories)
SmithKline Beecham Clinical Laboratories, 400 Egypt Rd., Norristown, PA 19403, 800–523–5447 (formerly: SmithKline Bio-Science Laboratories)
SmithKline Beecham Clinical Laboratories, 8000 Sovereign Row, Dallas, TX 75247, 214–638–1301 (formerly: SmithKline Bio-Science Laboratories)
SmithKline Beecham Clinical Laboratories, 1737 Airport Way South, Suite 200, Seattle, WA 98134, 206–623–8100
South Bend Medical Foundation, Inc., 530 N. Lafayette Blvd., South Bend, IN 46601, 219–234–4176
Southwest Laboratories, 2727 W. Baseline Rd., Suite 6, Tempe, AZ 85283, 602–438–8507
St. Anthony Hospital (Toxicology Laboratory), P.O. Box 205, 1000 N. Lee St., Oklahoma City, OK 73102, 405–272–7052
Toxicology & Drug Monitoring Laboratory, University of Missouri Hospital & Clinics, 301 Business Loop 70 West, Suite 208, Columbia, MO 65203, 314–882–1273
Toxicology Testing Service, Inc., 5426 N.W. 79th Ave., Miami, FL 33166, 305–593–2260
TOXWORX Laboratories, Inc., 6160 Variel Ave., Woodland Hills, CA 91367, 818–226–4373 (formerly: Laboratory Specialists, Inc.; Abused Drug Laboratories; MedTox Bio-Analytical, a Division of MedTox Laboratories, Inc.)
UNILAB, 18408 Oxnard St., Tarzana, CA 91356, 800–492–0800/818–343–8191 (formerly: MetWest–BPL Toxicology Laboratory)

The following laboratory withdrew from the Program on June 8, 1995.

Eagle Forensic Laboratory, Inc., 950 N. Federal Highway, Suite 308, Pompano Beach, FL 33062, 305–946–4324

Michele W. Applegate,

Acting Deputy Administrator, Substance Abuse and Mental Health Services Administration.

[FR Doc. 95–16319 Filed 6–30–95; 8:45 am]

BILLING CODE 4160–20–U

DEPARTMENT OF THE INTERIOR

Bureau of Land Management

[WO–300–1310]

Information Collection Submitted to the Office of Management and Budget for Review Under the Paperwork Reduction Act

The proposal for the collection of information listed below has been submitted to the Office of Management and Budget for approval under the provisions of the Paperwork Reduction Act (44 U.S.C. Chapter 35). Copies of the proposed collection of information and related forms and explanatory material may be obtained by contacting the Bureau's Clearance Officer at the phone number listed below. Comments and suggestions on the requirement should be made directly to the Bureau clearance officer and to the Office of Management and Budget, Paperwork Reduction Project (1004–0034), Washington, D.C. 20503, telephone 202–395–7340.

Title: Oil and Gas Lease Transfers by Assignment or Operating Rights (Sublease).

OMB Approval Number: 1004–0034.

Abstract: Respondents supply information on forms which are submitted by an applicant wishing to assign/transfer an interest in an oil and gas or geothermal lease.

Bureau Form Numbers: 3000–3, 3000–3a.

Frequency: On occasion.

Description of Respondents: Individuals, small businesses, large corporations.

Estimated Completion Time: ½ hour.

Annual Responses: 60,000.

Annual Burden Hours: 30,000.

Bureau Clearance Officer: Wendy Spencer (303) 236–6642.

Dated: June 9, 1995.

Hord Tipton,

Assistant Director, Resource Use and Protection.

[FR Doc. 95–16227 Filed 6–30–95; 8:45 am]

BILLING CODE 4310–84–M

[ES–020–05–1610–00]

Florida Resource Management Plan and Record of Decision

AGENCY: Bureau of Land Management, Interior.

SUMMARY: The Bureau of Land Management (BLM), Eastern States, Jackson District, has completed the Florida Resource Management Plan (RMP) and Record of Decision (ROD). This document, prepared in accordance with section 202 of the Federal Land Policy and Management Act of 1976 and section 202(c) of the National Environmental Policy Act of 1969, provides land use decisions and guidance for managing BLM-administered public lands throughout the State of Florida.

The Florida RMP/ROD is the result of a three year planning process involving significant public participation. The decisions described in the Florida RMP/ROD constitute final agency action for the Department of the Interior in accordance with 43 CFR 1610.5–2(b) and are not appealable. The public is invited to participate during implementation of these decisions.

Copies of the Florida RMP/ROD will be available upon request.

FOR FURTHER INFORMATION CONTACT: Robert V. Abbey, District Manager, U.S.D.I, Bureau of Land Management, Jackson District, 411 Briarwood Drive, Suite 404, Jackson, MS 39206.

SUPPLEMENTARY INFORMATION: The RMP/ROD provides land use decisions and guidance for managing BLM-administered public lands throughout the State of Florida. These lands include approximately 395,000 acres of split-estate federal mineral ownership (FMO), where federal ownership is limited to mineral interests and the surface estate is owned by either the State of Florida or private interests, and several hundred acres of public land comprised of small tracts and located in seven counties throughout the State. Under the RMP/ROD, federally-owned minerals underlying state-owned lands will be available to the State of Florida in exchange for lands identified for acquisition by the U.S. Department of the Interior and/or the U.S. Forest Service. The FMO underlying the Withlacoochee State Forest will be temporarily closed to limestone sales in order to allow for the exchange of the FMO to the State of Florida. Otherwise, FMO will be available for development as described below.

FMO is available for oil and gas leasing as follows: 175,149 acres subject to no surface occupancy stipulations. 123,011 acres subject to seasonal restrictions and/or controlled surface use stipulations. 25,476 acres subject solely to standard management.

FMO is available for phosphate leasing as follows: 294,947 acres subject to development constraints. 91,885 acres subject solely to standard management.

FMO is available for limestone sales as follows: 269,340 acres temporarily closed and/or subject to development constraints. 46,219 acres subject solely to standard management.

A portion (approximately 60 acres) of the Jupiter Inlet tract, located in Palm Beach County, is designated an Area of Critical Environmental Concern (ACEC). The ACEC will be managed to maintain a viable scrub vegetation community and improve habitat conditions for Florida scrub jay, gopher tortoise, and other endemic scrub species, and to interpret natural and cultural resources to provide recreation opportunities. Motorized vehicle use will be limited to designated routes. The ACEC will te withdrawn from entry under the 1872 mining law, closed to mineral material sales and mineral lease, and will be an avoidance area for rights-of-way. The ACEC will be available for cooperative management with other government agencies and/or private organizations, or for conveyance under the Recreation and Public Purposes Act, provided that the proposed use follows the stated management objectives and land-use allocations.

The Cape San Blas tract, located in Gulf County, is also identified for ACEC designation. The tract will be managed to protect the coastal dune habitat. The tract will be closed to motorized vehicle use, will be classified as an avoidance area for rights-of-way, will be withdrawn from entry under the 1872 mining law, and closed to mineral material sales and lease of solid minerals. Oil and gas leasing will be subject to a no surface occupancy stipulation. The tract will be available for cooperative management with other government agencies and/or private organizations,or for conveyance under the Recreation and Public Purposes Act, provided that the proposed use follows the stated management objectives and land-use allocations.

The Walton Beach tracts will be managed for enhancement of dune system habitat. The tracts will be available for a Recreation and Public Purposes Act (R&PP) lease, or for exchange to the State of Florida to accomplish Conservation and Recreation Lands (CARL) program objectives.

Dated: June 22, 1995.

Robert V. Abbey,

District Manager.

[FR Doc. 95–16260 Filed 6–30–95; 8:45 am]

BILLING CODE 4310–GJ–M

Fish and Wildlife Service

Availability of an Environmental Assessment and Receipt of an Application for a Permit To Allow Incidental Take of the Endangered Pahrump Poolfish by the Nevada Division of State Parks, Spring Mountain Ranch State Park, Clark County, Nevada

AGENCY: Fish and Wildlife, Interior.

ACTION: Notice.

SUMMARY: This notice advises the public that the Nevada Division of State Parks (Applicant) has applied to the U.S. Fish and Wildlife Service (Service) for an incidental take permit pursuant to section 10(a)(1)(B) of the Endangered Species Act of 1973, as amended (Act). The application includes the proposed habitat conservation plan fully describing the proposed project and mitigation, and the accompanying implementing agreement. The application has been assigned permit number PRT–804120. The requested permit would authorize the incidental take of the endangered Pahrump poolfish (*Empetrichthys latos latos*) in the irrigation storage reservoir at the Spring Mountain Ranch State Park (Park) in Clark County, Nevada. The proposed incidental take would occur during the renovation and operation of the reservoir in which the Pahrump poolfish occupies.

The Service also announces the availability of an environmental assessment (EA) for the proposed issuance of the incidental take permit. This notice is provided pursuant to section 10 of the Act and National Environmental Policy Act regulations (40 CFR 1506.6).

DATES: Written comments on the permit application and EA should be received on or before August 2, 1995.

ADDRESSES: Comments regarding the application or adequacy of the EA should be addressed to Mr. Carlos H. Mendoza, State Supervisor, U.S. Fish and Wildlife Service, Nevada State Office, 4600 Kietzke Lane, Building C–125, Reno, Nevada 89502. Please refer to permit number PRT–804120 when submitting comments. All comments, including names and addresses, received will become part of the official administrative record and may be made available to the public.

FOR FURTHER INFORMATION CONTACT: Mr. Mark Maley, at the above Reno, Nevada, address or at telephone number (702) 784–5227. Individuals wishing copies of the application or EA for review should immediately contact the above individual.

SUPPLEMENTARY INFORMATION: Under section 9 of the Act, ''taking'' of the Pahrump poolfish, an endangered species, is prohibited. However the Service, under limited circumstances, may issue permits to take endangered wildlife species if such taking is incidental to, and not the purpose of, otherwise lawful activities. Regulations governing permits for endangered species are in 50 CFR 17.22.

The Applicant proposes to implement a habitat conservation plan (HCP) for the Pahrump poolfish that would allow the renovation and operation of the Park reservoir. The proposed reservoir renovation would include dredging of the reservoir to restore its holding capacity and construction of a dam to control sedimentation. The Applicant estimates that there would be no incidental take of Pahrump poolfish during renovation activities and an unquantifiable number of poolfish during the 30-year operation of the reservoir. However, if an unanticipated accident should occur during renovation of the reservoir, the incidental take of the reservoir's Pahrump poolfish population (estimated at 15,039 ± 1,127 poolfish in 1994) could occur. The likelihood for such an accident to occur would be greatly reduced by the implementation of the proposed minimizing and monitoring measures outlined in the HCP. These measures include modification of construction activities to minimize poolfish mortalities and installation of two protective barriers between the construction zone and the inundated portion of the reservoir. The Applicant, as mitigation for the incidental take of Pahrump poolfish, proposes over the term of the permit, to continue to manage the reservoir jointly for irrigation and Pahrump poolfish. Management actions would include the termination of the annual practice of drawing down the reservoir to minimum pool, except for those years when maintenance is necessary. In addition, if renovation activities resulted in the total loss of the reservoir population of Pahrump poolfish within 1 year after completion of these activities, the Applicant would assist the Nevada Division of Wildlife and the Service in the reintroduction of poolfish from existing refugia back into the reservoir.

The EA considers the environmental consequences of three alternatives, the No-Action Alternative, Sediment Control Alternative, and the Reservoir Renovation Alternative (Preferred Alternative). The Reservoir Renovation Alternative would allow the renovation and continued operation of the reservoir, the short-term modification of suitable Pahrump poolfish habitat, and the incidental take of Pahrump poolfish. Under the No-Action Alternative, reservoir renovation would not occur and the permit would not be issued. Without reservoir dredging, increasingly restricted reservoir capacity would inevitably result in shortened irrigation and grazing seasons, most noticeably reflected in the shorter periods that Park pastures remained green. As a consequence, ranching, one of the Park's scenic and historic qualities, would be diminished, or lost. Over the long-term, gradual sedimentation of the reservoir would shrink Pahrump poolfish habitat and eventually fish numbers would decline. The Sediment Control Alternative would forego reservoir renovation in favor of a earth dam to reduce the rate of further sedimentation. The construction of the sediment dam would not result in any immediate adverse effects to the Pahrump poolfish population in the reservoir.

Dated: June 27, 1995.

Thomas Dwyer,

Deputy Regional Director, Region 1, Portland, Oregon.

[FR Doc. 95–16262 Filed 6–30–95; 8:45 am]

BILLING CODE 4310–55–P

INTERNATIONAL DEVELOPMENT COOPERATION AGENCY

Agency For International Development

Housing Guaranty Program; Notice of Investment Opportunity

The U.S. Agency for International Development (USAID) has authorized the guaranty of loans to the Banco General S.A., Panama (''Borrower'') as part of USAID's development assistance program. The proceeds of these loans will be used to finance shelter and shelter-related infrastructure for the benefit of low-income families in Panama. At this time, the Banco General S.A. has authorized USAID to request proposals from eligible lenders for a loan under this program of $7.0 Million U.S. Dollars (US$7,000,000). The name and address of the Borrower's representative to be contacted by interested U.S. lenders or investment bankers, the amount of the loan and project number are indicated below:

Banco General S.A., Panama

Project No: 525–HG–013

Housing Guaranty Loan No.: 525–HG–014 A02

Amount: US$7,000,000

Attention: Mr. Francisco Sierra, Vice President—Treasury Banco General S.A., Panama
(Street address: Avenida Cuba y Calle 34, Panama City, Panama)
Telex No.: 2733 GENERAL PG
Telefax No.: 507/225–2868 (preferred communication)
Telephone Nos.: 507/227–0770 or 507/227–3200

Interested lenders should contact the Borrower as soon as possible and indicate their interest in providing financing for the housing Guaranty Program. Interested lenders should submit their bids to the Borrower's representative by *Tuesday, July 11, 1995, 12:00 noon Eastern Daylight Savings Time.* Bids should be open for a period of 48 hours from the bid closing date. Copies of all bids should be simultaneously sent to the following:

Mr. Michael C. Trott, Chief, General Development Office and Economics, USAID, Unit 0949, APO AA 34002, c/o American Embassy, Panama City, Panama (Street address: Plaza Regency 2nd Floor, Avenida Via Espana #1), Telefax No.: 507/264–0104 (preferred communication), Telephone No.: 507/263–6011 and
Mr. Ronald A. Carlson, Director, Regional Housing and Urban Development Office, Latin America, USAID/RHUDO/Guatemala, Guatemala City, Guatemala, Unit 3323, APO AA 34024, Telefax No.: 502/2–320–663, Telephone No.: 502/2–320–603
Mr. Charles Billand, Assistant Director, Mr. Peter Pirnie, Financial Advisor, Address: U.S. Agency for International Development, Office of Environment and Urban Programs, G/ENV/UP, Room 409, SA–18, Washington, D.C. 20523–1822, Telex No.: 892703 AID WSA, Telefax No.: 703/875–4384 or 875–4639 (preferred communication), Telephone No.: 703/875–4300 or 875–4510

For your information the Borrower is currently considering the following terms:

(1) *Amount:* U.S. $7.0 million.

(2) *Term:* 30 years.

(3) *Grace Period:* Ten years grace on repayment of principal. (During grace period, semi-annual payments of interest only). If *variable* interest rate, repayment of principal to amortize in equal, semi-annual installments over the remaining 20-year life of the loan. If *fixed* interest rate, semi-annual level payments of principal and interest over the remaining 20-year life of the loan.

(4) *Interest Rate:* Alternatives of *fixed rate,* and *variable rate* are requested.

(a) *Fixed Interest Rate:* If rates are to be quoted based on a spread over an index, the lender should use as its index a long bond, specifically the 7⅝% U.S. Treasury Bond due February 15, 2025. Such rate is to be set at the time of acceptance.

(b) *Variable Interest Rate:* To be based on the six-month British Bankers Association LIBOR, preferably with terms relating to the Borrower's right to convert to fixed. The rate should be adjusted weekly.

(5) *Prepayment:*

(a) Offers should include an option for prepayment and mention prepayment premiums, if any.

(6) *Fees:* Offers should specify the placement fees and other expenses, including USAID fees, Paying and Transfer Agent fees, and out of pocket expenses, etc. Lenders are requested to include all legal fees in their placement fee. Such fees and expenses shall be payable at closing from the proceeds of the loan.

(7) *Closing Date:* As early as practicable, but not to exceed 60 days from date of selection of lender.

Selection of investment bankers and/or lenders and the terms of the loan are initially subject to the individual discretion of the Borrower, and thereafter, subject to approval by USAID. Disbursements under the loan will be subject to certain conditions required of the Borrower by USAID as set forth in agreements between USAID and the Borrower.

The full repayment of the loans will be guaranteed by USAID. The USAID guaranty will be backed by the full faith and credit of the United States of America and will be issued pursuant to authority in Section 222 of the Foreign Assistance Act of 1961, as amended (the ''Act'').

Lenders eligible to receive the USAID guaranty are those specified in Section 238(c) of the Act. They are: (1) U.S. citizens; (2) domestic U.S. corporations, partnerships, or associations substantially beneficially owned by U.S. citizens; (3) foreign corporations whose share capital is at least 95 percent owned by U.S. citizens; and, (4) foreign partnerships or associations wholly owned by U.S. citizens.

To be eligible for the USAID guaranty, the loans must be repayable in full no later than the thirtieth anniversary of the disbursement of the principal amount thereof and the interest rates may be no higher than the maximum rate established from time to time by USAID.

Information as to the eligibility of investors and other aspects of the USAID housing guaranty program can be obtained from: Mr. Michael J. Lippe, Director, Office of Environment and Urban Programs, U.S. Agency for International Development, Room 409, SA–18, Washington, DC 20523–1822, Fax Nos: 703/875–4384 or 875–4639, Telephone: 703/875–4300.

Dated: June 28, 1995.

Michael G. Kitay,

Assistant General Counsel, Bureau for Global Programs, Field Support and Research, U.S. Agency for International Development.

[FR Doc. 95–16361 Filed 6–30–95; 8:45 am]

BILLING CODE 6116–01–M

INTERSTATE COMMERCE COMMISSION

[Finance Docket No. 32708]

Chicago and North Western Railway Company—Trackage Rights Exemption—Wisconsin Central Limited

Wisconsin Central Limited (WC) has agreed to grant trackage rights to Chicago and North Western Railway Company (C&NW) [1] over portions of WC's lines between Wisconsin Central Milepost 48.85 and Wisconsin Central Milepost 50.2A, in Wisconsin Rapids, Wood County, WI. The proposed transaction will allow C&NW to facilitate economical and efficient operation of its traffic through the City of Wisconsin Rapids. The trackage rights were to become effective on or after June 21, 1995 and the transaction was scheduled to be consummated on or after June 30, 1995.

This notice is filed under 49 CFR 1180.2(d)(7). If the notice contains false or misleading information, the exemption is void *ab initio.* Petitions to revoke the exemption under 49 U.S.C. 10505(d) may be filed at any time. The filing of a petition to revoke will not automatically stay the transaction. Pleadings must be filed with the Commission and served on: Stuart F. Gassner, 165 North Canal St., Chicago, IL 60606–1551.

As a condition to the use of this exemption, any employees adversely affected by the trackage rights will be protected under *Norfolk and Western Ry. Co.—Trackage Rights—BN,* 354 I.C.C. 605 (1978), as modified in *Mendocino Coast Ry., Inc.—Lease and Operate,* 360 I.C.C. 653 (1980).

Decided: June 26, 1995.

[1] The acquisition of control of C&NW by Union Pacific Railroad, et al., was approved by the Commission in *Union Pacific Corporation, Union Pacific Railroad Company and Missouri Pacific Railroad Company—Control—Chicago and North Western Transportation Company and Chicago and North Western Railway Company,* Finance Docket No. 32133 (ICC served Mar. 7, 1995).

By the Commission, David M. Konschnik, Director, Office of Proceedings.

Vernon A. Williams,

Secretary.

[FR Doc. 95–16268 Filed 6–30–95; 8:45 am]

BILLING CODE 7035–01–P

[Finance Docket No. 32711 (Sub-No. 1)]

Ohio & Pennsylvania Railroad Company—Acquisition, Lease and Operation Exemption

Ohio & Pennsylvania Railroad Company (OPRC), a noncarrier, has filed an amended verified notice [1] under 49 CFR part 1150, Subpart D—*Exempt Transactions* to: (1) lease from P&LE Properties, Inc., 39.24 miles of rail line between milepost 0.0, at Youngstown, OH, and milepost 35.7, at Darlington, PA, including short segments of line in Youngstown (1.9 miles) and Negley (1.0 mile), OH, and between Youngstown and Struthers, PA (0.64 mile); (2) purchase from Consolidated Rail Corporation (Conrail) a 0.26-mile segment of line between mileposts 0.96 and 1.22 in Youngstown; and (3) acquire incidental trackage rights over an approximately 8-mile line between Youngstown and Boardman, OH.[2] OPRC will transport local traffic and will interchange overhead traffic with CSX Transportation, Inc., or Conrail at Youngstown. The exemption was made effective on June 23, 1995, by decision served that day.

This proceeding is related to *Summit View Corporation—Continuance in Control Exemption—Ohio & Pennsylvania Railroad Company,* Finance Docket No. 32712, wherein Summit View Corporation filed a verified notice to continue to control OPRC upon its becoming a rail carrier.

If the amended verified notice contains false or misleading information, the exemption is void *ab initio.* Petitions to reopen the proceeding to revoke the exemption under 49 U.S.C. 10505(d) may be filed at any time. The filing of a petition to reopen will not stay the exemption's effectiveness. An original and 10 copies of all pleadings, referring to Finance Docket No. 32711 (Sub-No. 1), must be filed with the Office of the Secretary, Case Control Branch, Interstate Commerce Commission, Washington, DC 20423. In addition, a copy of each pleading must be served on Kelvin J. Dowd, SLOVER & LOFTUS, 1224 Seventeenth Street, N.W., Washington, DC 20036.

Decided: June 27, 1995.

By the Commission, David M. Konschnik, Director, Office of Proceedings.

Vernon A. Williams,

Secretary.

[FR Doc. 95–16267 Filed 6–30–95; 8:45 am]

BILLING CODE 7035–01–P

[Docket No. AB–3 (Sub-No. 124X)]

Missouri Pacific Railroad Company—Abandonment Exemption—in Johnson, Pulaski and Massac Counties, IL (Joppa Branch)

Missouri Pacific Railroad Company (MP) has filed a notice of exemption under 49 CFR 1152 Subpart F—*Exempt Abandonments* to abandon a portion of rail line, known as the Joppa Branch, in Johnson, Pulaski and Massac Counties, IL. The trackage extends from milepost 339.70 near Vienna Junction to milepost 359.50 near Joppa, a total distance of approximately 19.80 miles.

MP has certified that: (1) No local traffic has moved over the line for at least 2 years; (2) there is no overhead traffic on the line; (3) no formal complaint filed by a user of rail service on the line (or by a State or local government entity acting on behalf of such user) regarding cessation of service over the line either is pending with the Commission or with any U.S. District Court or has been decided in favor of the complainant within the 2-year period; and (4) the requirements at 49 CFR 1105.7 (environmental reports), 49 CFR 1105.8 (historic reports), 49 CFR 1105.11 (transmittal letter), 49 CFR 1105.12 (newspaper publication), and 49 CFR 1152.50(d)(1) (notice to governmental agencies) have been met.

As a condition to use of this exemption, any employee adversely affected by the abandonment shall be protected under *Oregon Short Line R. Co.—Abandonment—Goshen,* 360 I.C.C. 91 (1979). To address whether this condition adequately protects affected employees, a petition for partial revocation under 49 U.S.C. 10505(d) must be filed.

Provided no formal expression of intent to file an offer of financial assistance (OFA) has been received, this exemption will be effective on August 2, 1995, unless stayed pending reconsideration. Petitions to stay that do not involve environmental issues,[1] formal expressions of intent to file an OFA under 49 CFR 1152.27(c)(2),[2] and trail use/rail banking requests under 49 CFR 1152.29 [3] must be filed by July 13, 1995. Petitions to reopen or requests for public use conditions under 49 CFR 1152.28 must be filed by July 24, 1995, with: Office of the Secretary, Case Control Branch, Interstate Commerce Commission, Washington, DC 20423.

A copy of any pleading filed with the Commission should be sent to applicant's representative: Joseph D. Anthofer, 1416 Dodge St., #830, Omaha, NE 68179.

If the notice of exemption contains false or misleading information, the exemption is void *ab initio.*

MP has filed an environmental report which addresses the abandonment's effects, if any, on the environmental and historic resources. The Section of Environmental Analysis (SEA) will issue an environmental assessment (EA) by July 7, 1995. Interested persons may obtain a copy of the EA by writing to SEA (Room 3219, Interstate Commerce Commission, Washington, DC 20423) or by calling Elaine Kaiser, Chief of SEA, at (202) 927–6248. Comments on environmental and historic preservation matters must be filed within 15 days after the EA is available to the public.

Environmental, historic preservation, public use, or trail use/rail banking conditions will be imposed, where appropriate, in a subsequent decision.

Decided: June 26, 1995.

By the Commission, David M. Konschnik, Director, Office of Proceedings.

Vernon A. Williams,

Secretary.

[FR Doc. 95–16266 Filed 6–30–95; 8:45 am]

BILLING CODE 7035–01–P

[Docket No. AB–254 (Sub-No. 6X)]

Providence and Worcester Railroad Company—Abandonment Exemption—in New Haven, CT

Providence and Worcester Railroad Company (P&W), has filed a notice of exemption under 49 CFR 1152 Subpart F—*Exempt Abandonments* to abandon

---

[1] OPRC's original verified notice, filed in the lead docket, inadvertently omitted certain aspects of the involved transaction, necessitating a refiling.

[2] The transactions described in (2) and (3) will be accomplished by assignment of a contract between P&LW Railroad, Inc., and Conrail to OPRC for consideration.

[1] A stay will be issued routinely by the Commission in those proceedings where an informed decision on environmental issues (whether raised by a party or by the Commission's Section of Environmental Analysis in its independent investigation) cannot be made prior to the effective date of the notice of exemption. *See Exemption of Out-of-Service Rail Lines,* 5 I.C.C.2d 377 (1989). Any entity seeking a stay on environmental concerns is encouraged to file its request as soon as possible in order to permit the Commission to review and act on the request before the effective date of this exemption.

[2] *See Exempt. of Rail Abandonment—Offers of Finan. Assist.,* 4 I.C.C.2d 164 (1987).

[3] The Commission will accept a late-filed trail use request as long as it retains jurisdiction to do so.

approximately 1.35 miles of line known as the Manufacturer's Industrial Track extending from its connection with P&W's Belle Dock Industrial Track to the end of the line.

P&W has certified that: (1) no local traffic has moved over the line for at least 2 years; (2) no overhead traffic has moved over the line for at least 2 years; (3) no formal complaint filed by a user of rail service on the line (or by a state or local government entity acting on behalf of such user) regarding cessation of service over the line either is pending with the Commission or with any U.S. District Court or has been decided in favor of the complainant within the 2-year period; and (4) the requirements at 49 CFR 1105.7 (environmental report), 49 CFR 1105.8 (historic report), 49 CFR 1105.11 (transmittal letter), 49 CFR 1105.12 (newspaper publication), and 49 CFR 1152.50(d)(1) (notice to governmental agencies) have been met.

As a condition to use of this exemption, any employee adversely affected by the abandonment shall be protected under *Oregon Short Line R. Co.—Abandonment—Goshen,* 360 I.C.C. 91 (1979). To address whether this condition adequately protects affected employees, a petition for partial revocation under 49 U.S.C. 10505(d) must be filed.

Provided no formal expression of intent to file an offer of financial assistance (OFA) has been received, this exemption will be effective on August 3, 1995, unless stayed pending reconsideration. Petitions to stay that do not involve environmental issues,[1] formal expressions of intent to file an OFA under 49 CFR 1152.27(c)(2),[2] and trail use/rail banking requests under 49 CFR 1152.29[3] must be filed by July 14, 1995. Petitions to reopen or requests for public use conditions under 49 CFR 1152.28 must be filed by July 24, 1995, with: Office of the Secretary, Case Control Branch, Interstate Commerce Commission, Washington, DC 20423.

A copy of any pleading filed with the Commission should be sent to applicant's representative: Harry A. Snyder, Providence and Worcester Railroad Company, P.O. Box 16551, Worcester, MA 01601.

If the notice of exemption contains false or misleading information, the exemption is void *ab initio.*

P&W has filed an environmental report which addresses the abandonment's effects, if any, on the environment and historic resources. The Section of Environmental Analysis (SEA) will issue an environmental assessment (EA) by July 7, 1995. Interested persons may obtain a copy of the EA by writing to SEA (Room 3219, Interstate Commerce Commission, Washington, DC 20423) or by calling Elaine Kaiser, Chief of SEA, at (202) 927–6248. Comments on environmental and historic preservation matters must be filed within 15 days after the EA is available to the public.

Environmental, historic preservation, public use, or trail use/rail banking conditions will be imposed, where appropriate, in a subsequent decision.

Decided: June 26, 1995.

By the Commission, David M. Konschnik, Director, Office of Proceedings.

Vernon A. Williams,

Secretary.

[FR Doc. 95–16269 Filed 6–30–95; 8:45 am]

BILLING CODE 7035–01–P

[1] A stay will be issued routinely by the Commission in those proceedings where an informed decision on environmental issues (whether raised by a party or by the Commission's Section of Environmental Analysis in its independent investigation) cannot be made before the effective date of the notice of exemption. *See Exemption of Out-of-Service Rail Lines,* 5 I.C.C.2d 377 (1989). Any entity seeking a stay on environmental concerns is encouraged to file its request as soon as possible in order to permit the Commission to review and act on the request before the effective date of this exemption.

[2] *See Exempt. of Rail Abandonment—Offers of Finan. Assist.,* 4 I.C.C.2d 164 (1987).

[3] The Commission will accept a late-filed trail use request as long as it retains jurisdiction to do so.

NATIONAL AERONAUTICS AND SPACE ADMINISTRATION

[Notice (95–048)]

NASA Advisory Council (NAC), Technology and Commercialization Advisory Committee (TCAC); Meeting

AGENCY: National Aeronautics and Space Administration.

ACTION: Notice of meeting.

SUMMARY: In accordance with the Federal Advisory Committee Act, Pub. L. 92–463, as amended, the National Aeronautics and Space Administration announces a meeting of the NASA Advisory Council, Technology and Commercialization Advisory Committee.

DATES: July 20, 1995, 8:30 a.m. to 5:00 p.m.; and July 21, 1995, 8:30 a.m. to noon.

ADDRESSES: National Aeronautics and Space Administration, Room MIC–6, 300 E Street, SW, Washington, DC 20546.

FOR FURTHER INFORMATION CONTACT: Mr. Gregory Reck, Code X, National Aeronautics and Space Administration, Washington, DC 20546 (202/358–4700).

SUPPLEMENTARY INFORMATION: The meeting will be open to the public up to the seating capacity of the room. The agenda for the meeting is as follows:

—NASA Expectations of Committee
—NASA Strategic Plan
—Research, Technology, and Applications for Space Transportation
—Commercialization and Technology Transfer
—NAC Review of Reusable Launch Vehicle (RLV)

It is imperative that the meeting be held on these dates to accommodate the scheduling priorities of the key participants. Visitors will be requested to sign a visitor's register.

Dated: June 27, 1995.

Timothy M. Sullivan,

Advisory Committee Management Office, National Aeronautics and Space Administration.

[FR Doc. 95–16237 Filed 6–30–95; 8:45 am]

BILLING CODE 7510–01–M

[Notice (95–049)]

Intent to Grant a Partially Exclusive Patent License

AGENCY: National Aeronautics and Space Administration.

ACTION: Notice of Intent to Grant a Patent License.

SUMMARY: NASA hereby gives notice of intent to grant Advanced Micro Devices, 5204 E. Ben White Boulevard, Austin, Texas 78741, a license to practice the invention protected by U.S. Patent No. 5,311,422, entitled ''General Purpose Architecture for Intelligent Computer-Aided Training,'' which was issued on May 10, 1994, to the United States of America as represented by the Administrator of the National Aeronautics and Space Administration. The partially exclusive license will contain appropriate terms and conditions to be negotiated in accordance with ''Licensing of Government-Owned Inventions,'' (37 CFR 404.1 *et seq.*). NASA will negotiate the final terms and conditions and grant the license unless, within 60 days of the date of this notice, the Patent Counsel, NASA, Johnson Space Center, receives written objections to the grant, together with supporting documentation. The Patent Counsel, NASA Johnson Space Center, will review all written responses to this notice and then recommend to the Associate General Counsel for Intellectual Property whether to grant the license.

DATES: Comments to the notice must be received by September 1, 1995.

ADDRESSES: Johnson Space Center, Mail Code HA, Houston, TX 77058.

FOR FURTHER INFORMATION CONTACT: Hardie R. Barr, Patent Attorney, (713) 483–1003.

Dated: June 23, 1995.

Edward A. Frankle,

General Counsel

[FR Doc. 95–16238 Filed 6–30–95; 8:45 am]

BILLING CODE 7510–01–M

[Notice 95–050]

Intent To Grant a Partially Exclusive Patent License

AGENCY: National Aeronautics and Space Administration.

ACTION: Notice of Intent to Grant a Patent License.

SUMMARY: NASA hereby gives notice of intent to grant Holmes Enterprises, Inc., 106 Normandy Lane, Newport News, VA 23606, a license to practice the invention protected by U.S. Patent No. 4,873,990, entitled ''Circumferential Pressure Probe,'' which was issued on October 17, 1989, to the United States of America as represented by the Administrator of the National Aeronautics and Space Administration. The partially exclusive license will contain appropriate terms and conditions to be negotiated in accordance with ''Licensing of Government-Owned Inventions,'' (37 CFR 404.1 *et seq.*). NASA will negotiate the final terms and conditions and grant the license unless, within 60 days of the date of this notice, the Patent Counsel, NASA, Langley Research Center, receives written objections to the grant, together with supporting documentation. The Patent Counsel, NASA Langley Research Center, will review all written responses to this notice and then recommend to the Associate General Counsel for Intellectual Property where to grant the license.

DATES: Comments to the notice must be received by September 1, 1995.

ADDRESSES: Langley Research Center, Mail Code 212, Hampton, VA 23681–0001.

FOR FURTHER INFORMATION CONTACT: George F. Helfrich, Patent Attorney, (804) 864–9260.

Dated: June 23, 1995.

Edward A. Frankle,

General Counsel.

[FR Doc. 95–16239 Filed 6–30–95; 8:45 am]

BILLING CODE 7510–01–M

NATIONAL ARCHIVES AND RECORDS ADMINISTRATION

Records Schedules; Availability and Request for Comments

AGENCY: National Archives and Records Administration, Office of Records Administration.

ACTION: Notice of availability of proposed records schedules; request for comments.

SUMMARY: The National Archives and Records Administration (NARA) publishes notice at least once monthly of certain Federal agency requests for records disposition authority (records schedules). Records schedules identify records of sufficient value to warrant preservation in the National Archives of the United States. Schedules also authorize agencies after a specified period to dispose of records lacking administrative, legal, research, or other value. Notice is published for records schedules that (1) propose the destruction of records not previously authorized for disposal, or (2) reduce the retention period for records already authorized for disposal. NARA invites public comments on such schedules, as required by 44 USC 3303a(a).

DATES: Request for copies must be received in writing on or before August 17, 1995. Once the appraisal of the records is completed, NARA will send a copy of the schedule. The requester will be given 30 days to submit comments.

ADDRESSES: Address requests for single copies of schedules identified in this notice to the Records Appraisal and Disposition Division (NIR), National Archives and Records Administration, College Park, MD 20740. Requesters must cite the control number assigned to each schedule when requesting a copy. The control number appears in the parentheses immediately after the name of the requesting agency.

SUPPLEMENTARY INFORMATION: Each year U.S. Government agencies create billions of records on paper, film, magnetic tape, and other media. In order to control this accumulation, agency records managers prepare records schedules specifying when the agency no longer needs the records and what happens to the records after this period. Some schedules are comprehensive and cover all the records of an agency or one of its major subdivisions. These comprehensive schedules provide for the eventual transfer to the National Archives of historically valuable records and authorize the disposal of all other records. Most schedules, however, cover records of only one office or program or a few series of records, and many are updates of previously approved schedules. Such schedules also may include records that are designated for permanent retention.

Destruction of records requires the approval of the Archivist of the United States. This approval is granted after a thorough study of the records that takes into account their administrative use by the agency of origin, the rights of the Government and of private persons directly affected by the Government's activities, and historical or other value.

This public notice identifies the Federal agencies and their subdivisions requesting disposition authority, includes the control number assigned to each schedule, and briefly describes the records proposed for disposal. The records schedule contains additional information about the records and their disposition. Further information about the disposition process will be furnished to each requester.

Schedules Pending

1. Department of Agriculture, Food Safety and Inspection Service (N1–462–95–2). Nonviolator program compliance records.
2. Department of Agriculture, Food and Consumer Service (N1–462–95–5). Electronic system used to track the purchase and distribution of agricultural commodities.
3. Department of the Air Force (N1–AFU–95–7). Vital statistics and notarial record for Wake Island. (Records will be transferred to the State of Hawaii.)
4. Department of Interior, Bureau of Indian Affairs (N1–75–95–1). Child Welfare Case Files.
5. Department of Transportation, Office of the Secretary (N1–398–94–3). Office of Small and Disadvantage Business Utilization bonding assistance and short term lending applications.
6. Department of the Treasury (N1–56–95–1). Records of the Legal Division of the Office of General Council.
7. Department of the Treasury, United States Secret Service (N1–87–93–2). Operational records of the Uniformed Division.
8. Department of State, Bureau of Administration (N1–59–95–4). Routine, Facilitative, and duplicative records relating to information management.
9. Department of State, Bureau of Democracy, Human Rights, and Labor (N1–59–95–12). Routine, facilitative, and duplicative records.
10. Federal Trade Commission (N1–122–95–1). Bureau of Economics

Antibiotic Study Working Files, 1953–58.

11. General Services Administration (N1–269–95–2). Reduction in retention period for Contract Appeal Case Files.
12. Immigration and Naturalization Service, (N1–85–92–1). Systematic Alien Verification for Entitlements System.
13. National Endowment for the Arts, Administrative Services Division (N1–288–95–2). Grant applicants' supporting materials.
14. Peace Corps (N1–490–95–7). Office of University Programs files.
15. Pension Benefit Guaranty Corporation (N1–465–95–1). Records of the Corporate Financing and Negotiations Department.
16. Tennessee Valley Authority (N1–142–92–12). Maps and Surveys correspondence file, 1933–1988.
17. Tennessee Valley Authority (N1–142–94–1). Original drawings, maps, sketches, and manufacturers' prints for TVA's power transmission system.
18. Tennessee Valley Authority (N1–142–95–8). Eliminated land tract files.
19. Tennessee Valley Authority (N1–142–95–10). Cemetery relocation project administration records.
20. U.S. Commission on Civil Rights (N1–453–95–1). Computer printouts, complaints, legislative study and administrative subject files.
21. U.S. Fish and Wildlife Service (N1–22–94–1). Electronic records relating to the 1970 and 1975 national surveys of fishing, hunting, and wildlife associated recreation.

Dated: June 19, 1995.

John W. Carlin,

Archivist of the United States.

[FR Doc. 95–16265 Filed 6–30–95; 8:45 am]

BILLING CODE 7515–01–M

NATIONAL FOUNDATION ON THE ARTS AND THE HUMANITIES

Cooperative Agreement for Designing a National System for Collecting Economic Data on Arts Organizations

AGENCY: National Endowment for the Arts.

ACTION: Notification of Availability.

SUMMARY: The National Endowment for the Arts requests proposals leading to the award of a Cooperative Agreement with the goal of creating specific recommendations regarding practical steps to be undertaken by the Endowment to improve the current state of economic data collection on arts organizations. The project will consist of three parts. Phase 1: A description of current national data collection systems on arts organizations. Phase 2: An assessment of needs of arts policymakers, researchers, and practitioners regarding arts organization economic data. Phase 3: An assessment of the ability of current data collection systems as described in Phase 1 to address the needs as determined in Phase 2. Those interested in receiving the Solicitation should reference Program Solicitation PS 95–08 in their written request and include two (2) self-addressed labels. Verbal requests for the Solicitation will not be honored.

DATES: Program Solicitation PS 95–08 is scheduled for release approximately July 21, 1995 with proposals due on August 21, 1995.

ADDRESSES: Requests for the Solicitation should be addressed to National Endowment for the Arts, Contracts Division, Room 217, 1100 Pennsylvania Ave., NW. Washington, DC 20506.

FOR FURTHER INFORMATION CONTACT: William I. Hummel, Contracts Division, National Endowment for the Arts, 1100 Pennsylvania Ave., NW. Washington, DC 20506 (202/682–5482).

William I. Hummel,

Director, Contracts and Procurement Division.

[FR Doc. 95–16228 Filed 6–30–95; 8:45 am]

BILLING CODE 7537–01–M

National Endowment for the Arts; Design Advisory Meeting

Pursuant to Section 10(a)(2) of the Federal Advisory Committee Act (Pub. L. 92–463), as amended, notice is hereby given that a meeting of the Design Advisory Panel (Overview Section) to the National Council on the Arts will be held on July 19–20, 1995 from 9:00 a.m. to 5:45 p.m. on July 19 and from 9:00 a.m. to 5:00 p.m. on July 20. This meeting will be held in Room M–07, at the Nancy Hanks Center, 1100 Pennsylvania Avenue, N.W., Washington, D.C., 20506.

This meeting will be open to the public on a space available basis.

Any interested person may observe meetings or portions thereof, which are open to the public, and may be permitted to participate in the discussions at the discretion of the meeting chairman and with the approval of the full-time Federal employee in attendance.

If you need special accommodations due to a disability, please contact the Office of Special Constituencies, National Endowment for the Arts, 1100 Pennsylvania Avenue NW., Washington, DC 20506, 202/682–5532, TYY 202/682–5496, at least seven (7) days prior to the meeting.

Further information with reference to this meeting can be obtained from Ms. Yvonne M. Sabine, Committee Management Officer, National Endowment for the Arts, Washington, DC 20506, or call 202/682–5433.

Dated: June 27, 1995.

Yvonne M. Sabine,

Director, Office of Council and Panel Operations, National Endowment for the Arts.

[FR Doc. 95–16218 Filed 6–30–95; 8:45 am]

BILLING CODE 7537–01–M

NUCLEAR REGULATORY COMMISSION

[Docket No. 50–289]

GPU Nuclear Corporation; Three Mile Island Nuclear Station, Unit 1 Environmental Assessment and Finding of No Significant Impact

The U.S. Nuclear Regulatory Commission (the Commission) is considering issuance of an exemption from the provisions of 10 CFR 50.44, 10 CFR 50.46, and appendix K to 10 CFR part 50 to GPU Nuclear Corporation (GPUN, the licensee) for Three Mile Island Nuclear Station, Unit 1 (TMI–1), located in Dauphin County, Pennsylvania.

Environmental Assessment

Identification of Proposed Action

The proposed action would enable the licensee to use demonstration fuel assemblies that contain some fuel rods whose zirconium–based cladding composition is somewhat different from the zirconium based compound named zircaloy. These demonstration assemblies would be loaded into TMI–1 during the upcoming September 1995 refueling outage and irradiated through fuel Cycles 11, 12, and 13.

The proposed action is in accordance with the licensee's application for exemption of June 1, 1995.

The Need for the Proposed Action

The proposed exemption to 10 CFR 50.44, 10 CFR 50.46, and appendix K to 10 CFR part 50 is needed because these regulations specifically refer to light-water reactors containing fuel consisting or uranium oxide pellets enclosed in zircaloy tubes. Zircaloy is a zirconium-based alloy currently in use as cladding for fuel pellets. A new zirconium-based cladding has been developed which is not the same chemical composition as

zircaloy, and which the licensee wants to test in reactor operation. Since 10 CFR 50.46 and 10 CFR part 50, appendix K limit Emergency Core Cooling System (ECCS) calculations to zircaloy and 10 CFR 50.44 relates to the generation of hydrogen gas from a metal-water reaction with zircaloy, an exemption is required in order to place two demonstration assemblies in the core. The staff has reviewed the chemical composition of the new cladding and found no significant difference between the new composition and zircaloy. Therefore, pursuant to 10 CFR 50.12, a special circumstance exists in which application of these regulations is not necessary to achieve the underlying purpose of the regulations. The NRC staff finds that granting the requested exemption is authorized by law, will not present an undue risk to the public health and safety, and is consistent with the common defense and security. Thus, an exemption is authorized by 10 CFR 50.12. The underlying purpose of 10 CFR 50.46 and 10 CFR 50 appendix K is to establish requirements for calculations of emergency core cooling systems. The licensee addressed the safety impact of the demonstration assemblies on emergency core cooling system performance as part of the application for exemption and demonstrated that the new zirconium based cladding does not affect the ECCS calculations. The underlying purpose of 10 CFR 50.44 is to ensure that means are provided for the control of hydrogen gas that may be generated following a postulated loss-of-coolant accident. The licensee previously addressed hydrogen generation following a loss-of-coolant accident. The licensee's proposed action has no significant effect on the previous assessment of hydrogen gas production.

Environmental Impacts of the Proposed Action

With regard to potential radiological impacts to the general public, the proposed exemption involves features located entirely within the restricted area as defined in 10 CFR part 20. It does not affect the potential for radiological accidents and does not affect radiological plant effluents. The demonstration assemblies meet the same design bases as the fuel which is currently in the reactor. No safety limits have been changed or setpoints altered as a result of the use of these assemblies. The Final Safety Analysis Report (FSAR) analyses are bounding for the demonstration assemblies as well as the remainder of the core. The advanced zirconium-based alloys have been shown through testing to perform satisfactorily under conditions representative of a reactor environment. In addition, the relatively small number of fuel rods involved does not represent a prohibitively large inventory of radioactive material which could be released into the reactor coolant in the event of cladding failure. The only credible consequence of this change would be a failure of the demonstration claddings. Even in the case of gross fuel failure, the number of rods involved is less than 1% of the core and, thus, sufficiently small that environmental impact would be negligible and is bounded by previous assessments. The small number of fuel rods involved in conjunction with the chemical similarity of the demonstration cladding to zircaloy cladding ensures that hydrogen production would not be significantly different from previous assessments. As a result, the proposed exemption does not affect the consequences of radiological accidents. Consequently, the Commission concludes that there are no significant radiological impacts associated with the proposed exemption.

With regard to the potential environmental impacts associated with the transportation of the demonstration assemblies, the advanced cladding have no impact on previous assessments determined in accordance with 10 CFR 51.52. With regard to potential nonradiological impacts, the proposed exemption does not affect nonradiological plant effluents and has no other environmental impact. Therefore, the Commission concludes that there are no significant nonradiological environmental impacts associated with the proposed exemption.

Alternatives to the Proposed Action

Because the Commission's staff has concluded that there is no significant environmental impact associated with the proposed exemption, any alternative to the proposed exemption will have either no significantly different environmental impact or greater environmental impact. The principal alternative would be to deny the requested exemption. This would not reduce environmental impacts as a result of plant operations.

Alternative Use of Resources

This action does not involve the use of resources not previously considered in connection with the Final Environmental Statement related to the operation of Three Mile Island Nuclear Station, Units 1 and 2, issued by the Commission in December 1972.

Agencies and Persons Consulted

In accordance with its stated policy, the NRC staff consulted with Richard Janati of the Pennsylvania Department of Environmental Resources on June 9, 1995, regarding the environmental impact of the proposed action. Mr. Janati had no comments on behalf of the Commonwealth of Pennsylvania.

Finding of No Significant Impact

Accordingly, the Commission has determined not to prepare an environmental impact statement for the proposed exemption.

Based upon the foregoing environmental assessment, the Commission concludes that the proposed action will not have a significant effect on the quality of the human environment.

For further details with respect to this action, see the request for exemption dated June 1, 1995, which is available for public inspection at the Commission's Public Document Room, 2120 L Street, NW., Washington, DC 20555 and at the local public document room located at the Law/Government Publication Section, State Library of Pennsylvania, (Regional Depository) Walnut Street and Commonwealth Avenue, Box 1601, Harrisburg, PA 17105.

Dated at Rockville, Maryland this 26th day of June, 1995.

For the Nuclear Regulatory Commission.

Ronald W. Hernan,

Acting Director, Project Directorate I–3, Division of Reactor Projects—I/II Office of Nuclear Reactor Regulation.

[FR Doc. 95–16248 Filed 6–30–95; 8:45 am]

BILLING CODE 7590–1–M

[Docket No. 50–272]

Public Service Electric and Gas; Environmental Assessment and Finding of No Significant Impact

The U.S. Nuclear Regulatory Commission (the Commission) is considering issuance of an exemption from Facility Operating License No. DPR–70, issued to the Public Service and Gas Company, (the licensee) for the Salem Nuclear Generating Station, Unit 1. The plant is located at the licensee's site in Salem County, New Jersey.

Environmental Assessment

Identification of Proposed Action

The proposed action would grant an exemption from a requirement of Section III.D.1.(a) of appendix J to 10 CFR part 50, which requires a set of three Type A tests (Containment

Integrated Leakage Rate Test or CILRT) be performed at approximately equal intervals during each 10-year service period. The licensee's request for an exemption would defer the next scheduled CILRT for one outage, from Refuel 12 to Refuel 13.

The proposed action is in accordance with the licensee's request for exemption dated April 4, 1995.

The Need for the Proposed Action

The proposed action is needed because the licensee's current schedule would require a CILRT to be performed during Refuel 12 (September 1995). Minimal safety benefit would be realized by performing the scheduled CILRT, since the majority of primary containment leakage has previously been identified through the performance of the Local Leak Rate Tests (LLRT). Without the exemption, the licensee would incur additional cost and downtime of the unit.

Environmental Impacts of the Proposed Action

The Commission has completed its evaluation of the proposed action and concludes that the proposed exemption would not significantly increase the probability or amount of expected containment leakage, and that containment integrity would thus be maintained.

The change will not increase the probability or consequences of accidents, no changes are being made in the types of any effluents that may be released offsite, and there is no significant increase in the allowable individual or cumulative occupational radiation exposure. Accordingly, the Commission concludes that there are no significant radiological environmental impacts associated with the proposed action.

With regard to potential nonradiological impacts, the proposed action does involve features located entirely within the restricted area as defined in 10 CFR part 20. It does not affect nonradiological plant effluents and has no other environmental impact. Accordingly, the Commission concludes that there are no significant nonradiological environmental impacts associated with the proposed action.

Alternative to the Proposed Action

Since the Commission has concluded there is no measurable environmental impacts associated with the proposed action, any alternatives with equal or greater environmental impact need not be evaluated. As an alternative to the proposed action, the staff considered denial of the proposed action. Denial of the application would result in no change in current environmental impacts. The environmental impacts of the proposed action and the alternative action are similar.

Alternative Use of Resources

This action does not involve the use of any resources not previously considered in the ''Final Environmental Statement related to the operation of Salem Nuclear Generating Station,'' dated April 1973.

Agencies and Persons Consulted

In accordance with its stated policy, on May 31, 1995, the NRC staff consulted with the New Jersey State official, Mr. Dennis Zannoni of the Department of Environmental Protection regarding the environmental impact of the proposed action. The State official had no comments.

Finding of No Significant Impact

Based upon the environmental assessment, the Commission concludes that the proposed action will not have a significant effect on the quality of the human environment. Accordingly, the Commission has determined not to prepare an environmental impact statement for the proposed action.

For further details with respect to this proposed action, see the licensee's letter dated April 4, 1995, which is available for public inspection at the Commission's Public Document Room, The Gelman Building, 2120 L Street NW., Washington, DC and at the local public document room located at the Salem Free Public Library, 112 West Broadway, Salem, NJ 08079.

Dated at Rockville, Maryland, this 27th day of June 1995.

For the Nuclear Regulatory Commission.

John F. Stolz,

Director, Project Directorate I–2, Division of Reactor Projects—I/II, Office of Nuclear Reactor Regulation.

[FR Doc. 95–16247 Filed 6–30–95; 8:45 am]

BILLING CODE 7590–01–M

Delegation of Authority

AGENCY: Nuclear Regulatory Commission.

ACTION: Notice of delegation of authority to the Chairman of the Nuclear Regulatory Commission.

SUMMARY: On July 2, 1995, due to vacancies on the Commission, a quorum of Members of the Nuclear Regulatory Commission will not be available. This circumstance is provided for in a delegation of authority approved by the Commission under section 1 of Reorganization Plan No. 1 of 1980, whereby all Commission functions are delegated to the Chairman at such time as a quorum (at least three Members) ceases to exist.

EFFECTIVE DATE: This delegation shall take effect on July 2, 1995 and shall remain in effect only until a quorum has been restored.

FOR FURTHER INFORMATION CONTACT: Peter Crane, 301–415–1622.

SUPPLEMENTARY INFORMATION: The text of the delegation of authority follows:

Delegation of Authority

Under section 201(a) of the Energy Reorganization Act of 1974, as amended, a quorum for the transaction of business shall consist of at least three Members. While the Commission has a quorum, it is making necessary delegations of authority to ensure that the agency mission can be carried out in the event that, unexpectedly, a quorum is no longer available due to vacancies or the incapacitation of a Member. These delegations shall take effect immediately upon the lack of a quorum for the reasons stated above and shall remain in effect only until a quorum has been restored. This document is to be published in the **Federal Register** by the Secretary of the Commission should the delegations come into force.

Under section 1 of Reorganization Plan No. 1 of 1980, the Commission's functions are limited to policy formulation, rulemaking and adjudication. It is imperative that the agency be able to carry out these functions at all times. Section 1 further provides that the performance of any of these functions can be delegated to a member of the Commission, including the Chairman.

To ensure that these functions can be successfully carried out, the Commission, pursuant to section 1 of Reorganization Plan No. 1 of 1980, is hereby delegating the authority to carry out all Commission functions, should the absence of a quorum arise, to the Chairman of the Commission. In the event the Chairman is incapacitated or that position is not filled, the authority is delegated to the Commissioner with the longest service on the Commission. The Chairman or Commissioner exercising the authority conferred by this delegation is required to consult with the other Commissioner before taking action on a matter. For the purpose of this delegation the term ''Chairman'' shall also include ''Acting Chairman''.

All existing delegations of authority to NRC officials in effect prior to the effective date of this delegation of authority remain in full force and effect.

Approved at Rockville, Maryland, this 23rd day of June, 1994.

/S/ Ivan Selin

Ivan Selin.

Chairman.

/S/ Kenneth C. Rogers

Kenneth C. Rogers,

Commissioner.

/S/ Forrest J. Remick

Forrest J. Remick,

Commissioner.

/S/ E. Gail de Planque

E. Gail de Planque,

Commissioner.

Dated at Rockville, Maryland, this 28th day of June, 1995.

John C. Hoyle,

Secretary of the Commission.

[FR Doc. 95–16316 Filed 6–30–95; 8:45 am]

BILLING CODE 7590–01–P

OFFICE OF PERSONNEL MANAGEMENT

The National Partnership Council; Meeting

AGENCY: Office of Personnel Management.

ACTION: Notice of meeting.

SUMMARY: The Office of Personnel Management (OPM) announces the next meeting of the National Partnership Council (the Council). Notice of this meeting is required under the Federal Advisory Committee Act.

TIME AND PLACE: The Council will meet July 12, 1995, at 1 p.m., in the auditorium at the Office of Personnel Management, Theodore Roosevelt Building, 1900 E Street, NW., Washington, DC 20415–0001. The auditorium is located on the ground level.

TYPE OF MEETING: This meeting will be open to the public. Seating will be available on a first-come, first-served basis. Handicapped individuals wishing to attend should contact OPM at the number shown below to obtain appropriate accommodations.

POINT OF CONTACT: Douglas K. Walker, National Partnership Council, Executive Secretariat, Office of Personnel Management, Theodore Roosevelt Building, 1900 E Street, NW., Room 5315, Washington, DC 20415–0001, (202) 606–1000.

SUPPLEMENTARY INFORMATION: The Council will receive reports on and discuss activities contained in the strategic action plan for 1995 that was adopted at the January 10, 1995, meeting. Additionally, there will be a panel discussion of the Administration's May 24, 1995, specifications for the Federal Human Resource Management Reinvention Act of 1995. The panel will include representatives from Federal employee unions, veterans organizations, and the Coalition for Effective Change. To get a copy of the Administration's specifications, call Phyllis G. Foley at (202) 606–2930.

PUBLIC PARTICIPATION: We invite interested persons and organizations to submit written comments on the Administration's specifications. Mail or deliver your comments to Mr. Douglas K. Walker at the address shown above. Comments should be submitted before the July 12 meeting or within 30 days after this notice is published in the **Federal Register**.

Office of Personnel Management,

James B. King,

Director.

[FR Doc. 95–16229 Filed 6–30–95; 8:45 am]

BILLING CODE 6325–01–M

SECURITIES AND EXCHANGE COMMISSION

[Release No. 34–35909; File No. SR–Amex–95–14]

Self-Regulatory Organizations; Notice of Filing of Proposed Rule Change by the American Stock Exchange, Inc. Relating to Permanent Approval of Its Pilot Program That Permits Specialists to Grant Stops in a Minimum Fractional Change Market

June 28, 1995.

Pursuant to Section 19(b)(1) of the Securities Exchange Act of 1934 (''Act''), 15 U.S.C. 78s(b)(1), notice is hereby given that on March 23, 1995, the American Stock Exchange, Inc. (''Amex'' or ''Exchange'') filed with the Securities and Exchange Commission (''Commission'') the proposed rule change as described in Items I, II, and III below, which Items have been prepared by the self-regulatory organization. The Commission is publishing this notice to solicit comments on the proposed rule change from interested persons.

I. Self-Regulatory Organization's Statement of the Terms of Substance of the Proposed Rule Change

The Exchange requests permanent approval of the pilot program that amended Exchange Rule 109 to permit a specialist, upon request, to grant stops in a minimum fractional change market.[1] The text of the proposed rule change is available at the Office of the Secretary, Amex, and at the Commission.

II. Self-Regulatory Organization's Statement of the Purpose of, and Statutory Basis for, the Proposed Rule Change

In its filing with the Commission, the self-regulatory organization included statements concerning the purpose of and basis for the proposed rule change and discussed any comments it received on the proposed rule change. The text of these statements may be examined at the places specified in Item IV below. The self-regulatory organization has prepared summaries, set forth in Sections A, B, and C below, of the most significant aspects of such statements.

A. Self-Regulatory Organization's Statement of the Purpose of, and Statutory Basis for, the Proposed Rule Change

1. Purpose

On January 31, 1995, the Commission extended its pilot approval of amendments to Exchange Rule 109 until July 21, 1995.[2] The amendments permit a specialist, upon request, to grant a stop [3] in a minimum fractional change market [4] for any order of 2,000 shares or less, up to a total of 5,000 shares for all stopped orders, provided there is an order imbalance, without obtaining prior Floor Official approval. A Floor Official, however, must authorize a greater order size or aggregate share threshold.

During the course of the pilot program, the Exchange has closely monitored compliance with the rule's requirements, as well as analyzed the impact on orders on the specialist's book resulting from the execution of stopped orders at a price that is better than the stop price, and reviewed

[1] The Amex received approval to amend Rule 109, on a pilot basis, in Securities Exchange Act Release No. 30603 (Apr. 17, 1992), 57 FR 15340 (Apr. 27, 1992) (File No. SR–Amex–91–05) (''1992 Approval Order''). The Commission subsequently extended the Amex's pilot program in Securities Exchange Act Release Nos. 32185 (Apr. 21, 1993), 58 FR 25681 (Apr. 27, 1993) (File No. SR–Amex–93–10) (''April 1993 Approval Order''); 32664 (July 21, 1993) 58 FR 40171 (July 27, 1993) (File No. SR–Amex–93–22) (''July 1993 Approval Order''); 33791 (Mar. 21, 1994), 59 FR 14432 (Mar. 28, 1994) (File No. SR–Amex–93–47) (''1994 Approval Order''); and 35310 (Jan. 31, 1995) 60 FR 7236 (Feb. 7, 1995) (File No. SR–Amex–95–01) (January 1995 Approval Order'').

[2] *See* January 1995 Approval Order, *supra,* note 1.

[3] An agreement to ''stop'' stock at a specified price constitutes a guarantee by the member who grants the stop that the order of the member who accepts the stop will be executed at the stop price or better. *See* Amex Rule 109(a).

[4] Amex Rule 127 sets forth the minimum fractional changes for securities traded on the Exchange.

market depth in a stock when a stop is granted in a minimum fractional change market. The Exchange believes that the amendments to Rule 109 have provided a benefit to investors by providing an opportunity for price improvement, while increasing market depth and continuity without adversely affecting orders on the specialist's book.[5]

The Exchange is therefore proposing permanent approval of the amendments to Rule 109.

2. Statutory Basis

The proposed rule change is consistent with Section 6(b) of the Act in general and furthers the objectives of Section 6(b)(5) in particular in that it is designed to promote just and equitable principles of trade, to remove impediments to and perfect the mechanism of a free and open market, and, in general, to protect investors and the public interest. The Exchange believes that the proposed amendments to Rule 109 are consistent with these objectives in that they are designed to allow stops, in minimum fractional markets, under limited circumstances that provide for the possibility of price improvement to customers whose orders are granted stops.

B. Self-Regulatory Organization's Statement on Burden on Competition

The Exchange does not believe that the proposed rule change will impose any inappropriate burden on competition.

C. Self-Regulatory Organization's Statement on Comments on the Proposed Rule Change Received From Members, Participants, or Others

No written comments were either solicited or received.

III. Date of Effectiveness of the Proposed Rule Change and Timing for Commission Action

Within 35 days of the publication of this notice in the **Federal Register** or within such other period (i) as the Commission may designate up to 90 days of such date if it finds such longer period to be appropriate and publishes its reasons for so finding or (ii) as to which the self-regulatory organization consents, the Commission will:

(A) By order approve the proposed rule change, or

(B) Institute proceedings to determine whether the proposed rule change should be disapproved.

[5] The Exchange has prepared periodic monitoring reports regarding these matters which have been provided to the Commission during the course of the pilot program.

IV. Solicitation of Comments

Interested persons are invited to submit written data, views, and arguments concerning the foregoing. Persons making written submissions should file six copies thereof with the Secretary, Securities and Exchange Commission, 450 Fifth Street, N.W., Washington, D.C. 20549. Copies of the submission, all subsequent amendments, all written statements with respect to the proposed rule change that are filed with the Commission, and all written communications relating to the proposed rule change between the Commission and any person, other than those that may be withheld from the public in accordance with the provisions of 5 U.S.C. 552, will be available for inspection and copying at the Commission's Public Reference Section, 450 Fifth Street, NW., Washington, DC 20549. Copies of such filing will also be available for inspection and copying at the principal office of the Exchange. All submissions should refer to File No. SR–Amex–95–14 and should be submitted by July 24, 1995.

For the Commission, by the Division of Market Regulation, pursuant to delegated authority.

Margaret H. McFarland,

Deputy Secretary.

[FR Doc. 95–16399 Filed 6–30–95; 8:45 am]

BILLING CODE 8010–01–M

[Release No. 34–35910; File No. SR–CHX–95–10]

Self-Regulatory Organizations; Notice of Filing of Proposed Rule Change by the Chicago Stock Exchange, Incorporated Relating to Permanent Approval of the Pilot Program for Stopped Orders in Minimum Variations Markets

June 28, 1995.

Pursuant to Section 19(b)(1) of the Securities Exchange Act of 1934 (''Act''), 15 U.S.C. 78s(b)(1), notice is hereby given that on March 23, 1995, the Chicago Stock Exchange, Incorporated (''CHX'' or ''Exchange'') filed with the Securities and Exchange Commission (''Commission'') the proposed rule change as described in Items I, II, and III below, which Items have been prepared by the self-regulatory organization. The Commission is publishing this notice to solicit comments on the proposed rule change from interested persons.

I. Self-Regulatory Organization's Statement of the Terms of Substance of the Proposed Rule Change

The Exchange requests permanent approval of its pilot program for stopped orders in minimum variation markets. The pilot was originally approved on January 14, 1992.[1] The first requested extension of the pilot was approved by the Commission on March 10, 1993.[2] The second requested extension of the pilot was approved by the Commission on June 11, 1993.[3] The third requested extension of the pilot was approved by the Commission on March 21, 1994.[4] The fourth requested extension of the pilot was approved by the Commission on March 1, 1995.[5] The pilot program is set to expire on July 21, 1995.

II. Self-Regulatory Organization's Statement of the Purpose of, and Statutory Basis for, the Proposed Rule Change

In its filing with the Commission, the self-regulatory organization included statements concerning the purpose of and basis for the proposed rule change and discussed any comments it received on the proposed rule change. The text of these statements may be examined at the places specified in Item IV below. The self-regulatory organization has prepared summaries, set forth in Sections A, B, and C below, of the most significant aspects of such statements.

A. Self-Regulatory Organization's Statement of the Purpose of, and Statutory Basis for, the Proposed Rule Change

1. Purpose

The purpose of the proposed rule change is to request permanent approval of the pilot program implemented to establish a procedure regarding the execution of ''stopped'' market orders in minimum variation markets (usually an ⅛th spread market). In 1992, the

[1] *See* Securities Exchange Act Release No. 30189 (Jan. 14, 1992), 57 FR 2621 (Jan. 22, 1992) (File No. SR–MSE–91–10) (order approving MSE pilot program for stopped orders in minimum variation markets) (''1992 Approval Order'').

[2] *See* Securities Exchange Act Release No. 31975 (Mar. 10, 1993), 58 FR 14230 (Mar. 16, 1993) (File No. SR–MSE–93–04) (order granting accelerated approval of extension of pilot program for stopped orders in minimum variation markets).

[3] *See* Securities Exchange Act Release No. 32457 (June 11, 1993), 58 FR 33681 (June 18, 1993) (File No. SR–MSE–93–14) (order granting accelerated approval of extension of pilot program).

[4] *See* Securities Exchange Act Release No. 33790 (Mar. 21, 1994), 59 FR 14434 (Mar. 28, 1994) (File No. SR–MSE–93–30) (order granting accelerated approval of extension of pilot program).

[5] *See* Securities Exchange Act Release No. 35431 (Mar. 1, 1995), 60 FR 12796 (Mar. 8, 1995) (File No. SR–CHX–95–04) (order granting accelerated approval of extension of pilot program).

Exchange adopted interpretation and policy .03 to Rule 37 of Article XX on a pilot basis to permit ''stopped'' market orders in minimum variation markets.[6] Prior to the pilot program, no Exchange rule required specialists to grant stops in minimum variation markets if an out-of-range execution would result.[7] Although the Exchange has a policy regarding the execution of stopped market orders generally, the Exchange believes it is necessary to establish a separate policy for executing stopped market orders when there is a minimum variation market.

The Exchange's general policy regarding the execution of stopped orders is to execute them based on the next primary market sale. If this policy were used in a minimum variation market, it would cause the anomalous result of requiring the execution of all pre-existing order even if those orders are not otherwise entitled to be filled.[8]

The Exchange's proposed policy will prevent unintended results by continuing a pilot program for ''stopped'' market orders in minimum variation markets.[9] Specifically, the pilot program requires the execution of stopped market orders in minimum variation markets after a transaction takes place on the primary market at the stopped price or worse (higher for buy orders and lower for sell orders), or after the applicable Exchange share volume is exhausted. In no event will a stopped order be executed at a price inferior to the stopped price.[10] The Exchange believes that the proposed policy will continue to benefit customers because they might receive a better price than the stop price, yet it also protects Exchange specialists by eliminating their exposure to executing potentially large amounts of pre-existing bids or offers when such executions would otherwise not be required under Exchange rules.

2. Statutory Basis

The proposed rule change is consistent with Section 6(b)(5) of the Act in that it is designed to promote just and equitable principles of trade.

B. Self-Regulatory Organization's Statement on Burden on Competition

The Exchange does not believe that the proposed rule change will impose any inappropriate burden on competition.

C. Self-Regulatory Organization's Statement on Comments on the Proposed Rule Change Received From Members, Participants, or Others

No written comments were either solicited or received.

III. Date of Effectiveness of the Proposed Rule Change and Timing for Commission Action

Within 35 days of the publication of this notice in the **Federal Register** or within such other period (i) as the Commission may designate up to 90 days of such date if it finds such longer period to be appropriate and publishes its reasons for so finding or (ii) as to which the self-regulatory organization consents, the Commission will:

(A) By order approve the proposed rule change, or

(B) Institute proceedings to determine whether the proposed rule change should be disapproved.

IV. Solicitation of Comments

Interested persons are invited to submit written data, views, and arguments concerning the foregoing. Persons making written submissions should file six copies thereof with the Secretary, Securities and Exchange Commission, 450 Fifth Street, NW., Washington, DC 20549. Copies of the submission, all subsequent amendments, all written statements with respect to the proposed rule change that are filed with the Commission, and all written communications relating to the proposed rule change between the Commission and any person, other than those that may be withheld from the public in accordance with the provisions of 5 U.S.C. § 552, will be available for inspection and copying at the Commission's Public Reference Section, 450 Fifth Street, NW., Washington, DC 20549. Copies of such filing will also be available for inspection and copying at the principal office of the Exchange. All submissions should refer to File No. SR–CHX–95–10 and should be submitted by July 24, 1995.

For the Commission, by the Division of Market Regulation, pursuant to delegated authority.

Margaret H. McFarland,

Deputy Secretary.

[FR Doc. 95–16400 Filed 6–30–95; 8:45 am]

BILLING CODE 8010-01–M

[Release No. 34–35908; File No. SR–NYSE–95–14]

Self-Regulatory Organizations; Notice of Filing of Proposed Rule Change by the New York Stock Exchange, Inc. Relating to the Permanent Approval of Its Pilot Program for Stopping Stock Under Amendments to Rule 116.30

June 28, 1995.

Pursuant to Section 19(b)(1) of the Securities Exchange Act of 1934 (''Act''), 15 U.S.C. 78s(b)(1), notice is hereby given that on March 31, 1995, the New York Stock Exchange, Inc. (''NYSE'' or ''Exchange'') filed with the Securities and Exchange Commission (''Commission'') the proposed rule change as described in Items I, II, and III below, which Items have been prepared by the self-regulatory organization. The Commission is publishing this notice to solicit comments on the proposed rule change from interested persons.

I. Self-Regulatory Organization's Statement of the Terms of Substance of the Proposed Rule Change

The proposed rule change consists of a request for permanent approval of amendments to Rule 116.30 with respect to the ability of specialists to stop stock in eighth point markets.[1] The

---

[6] *See* 1992 Approval Order, *supra,* note 1.

[7] The term ''out-of-range'' means either higher or lower than the price range in which the security traded on the primary market during a particular trading day.

[8] For example, assume the market in ABC stock is 20–20⅛; 50 x 50 with ⅛th being out of range. A customer places an order with the Exchange specialist to buy 100 shares of ABC at the market and a stop is effected. The order is stopped at 20⅛ and the Exchange specialist includes the order in his quote by bidding the 100 shares at 20. If the next sale on the primary market is for 100 shares at 20, adopting the Exchange's existing general policy to minimum variation markets would require the specialist to execute the stopped market order at 20. However, because the stopped market order does not have time or price priority, its execution triggers the requirement for the Exchange specialist to execute all pre-existing bids (in this case 5,000 shares) based on the Exchange's rules of priority and precedence. This is so even though the pre-existing bids were not otherwise entitled to be filled.

In the above example, Exchange Rule 37 (Article XX) requires the Exchange specialist to fill orders at the limit price only if such orders would have been filled had they been transmitted to the primary market. Therefore, the 100 share print at 20 in the primary market would cause at the most 100 of the 5,000 share limit order to be filled on the Exchange. However, the Exchange's general policy regarding stopped orders, if applied to minimum variation markets, would require the 100 share stopped market order to be filled, and as a result, all pre-existing bids at the same price to be filled in accordance with Exchange Rule 16 (Article XX) (Precedence of Bids at Same Price).

[9] *See* 1992 Approval Order, *supra,* note.1.

[10] Exchange Rule 28 (Article XX) states:

An agreement by a member or member organization to ''stop'' securities at a specified price shall constitute a guarantee of the purchase or sale by him or it of the securities at the price or its equivalent in the amount specified.

If an order is executed at a less favorable price than that agreed upon, the member or member organization which agreed to stop the securities shall be liable for an adjustment of the difference between the two prices.

[1] The NYSE received approval to amend Rule 116.30, on a pilot basis, in Securities Exchange Act

text of the proposed rule change is available at the Office of the Secretary, NYSE, and at the Commission.

II. Self-Regulatory Organization's Statement of the Purpose of, and Statutory Basis for, the Proposed Rule Change

In its filing with the Commission, the self-regulatory organization included statements concerning the purpose of and basis for the proposed rule change and discussed any comments it received on the proposed rule change. The text of these statements may be examined at the places specified in Item IV below. The self-regulatory organization has prepared summaries, set forth in Sections A, B, and C below, of the most significant aspects of such statements.

A. Self-Regulatory Organization's Statement of the Purpose of, and Statutory Basis for, the Proposed Rule Change

1. Purpose

The purpose of the proposed rule change is to seek permanent approval of amendments to Exchange Rule 116.30 that permit a specialist to grant a stop in a minimum variation market. The practice of ''stopping'' stock by specialists on the Exchange refers to a guarantee by the specialist that an order the specialist receives will be executed at no worse a price than the contra-side price in the market when the specialist receives the order, with the understanding that the order may in fact receive a better price.

Formerly, Exchange Rule 116.30 permitted a specialist to ''stop'' stock only when the quotation spread was at least twice the minimum variation (*i.e.*, for most stocks ¼ point), with the specialist then being required to narrow the quotation spread by making a bid or offer, as appropriate, on behalf of the order that is being stopped.

For three years, on March 21, 1991, March 16, 1992, and March 22, 1993, the Commission approved, on a one-year pilot basis each time, amendments to the rule that permit a specialist to stop stock in a minimum variation market (generally referred to as an ⅛-point market).[2] The Exchange sought these amendments on the grounds that many orders would receive an improved price if stopping stock in ⅛ point markets were permitted. The amendments to Rule 116.30 permit a specialist, upon request, to stop individual orders of 2,000 shares or less, up to an aggregate of 5,000 shares of multiple orders, in an ⅛ point market.[3] A specialist may stop an order of a specified larger order size threshold, or a larger aggregate number of shares, after obtaining Floor Official approval.

In the Commission's 1994 Approval Order, which extended the pilot until March 21, 1995, the Commission asked the Exchange to submit a fourth monitoring report on the stopping stock pilot.[4] Subsequently, the Commission approved an extension of the pilot until July 21, 1995 so that the Commission would have additional time to evaluate the new information provided in the fourth monitoring report and to ensure that Rule 116.30, as amended, does not harm public customers with limit orders on the specialist's book.[5]

The monitoring report has been submitted to the Commission under separate cover. The Exchange believes that the results obtained by its monitoring effort during the pilot period show that the amendments to Rule 116.30 enable specialists to better serve investors through the ability to offer price improvement to stopped orders, while having relatively little adverse impact on other orders on the book. The Exchange continues to believe that these results support the Commission's granting of permanent approval of the proposed rule change to Rule 116.30.

2. Statutory Basis

The basis under the Act for the proposed rule change is the requirement under Section 6(b)(5) that an Exchange have rules that are designed to promote just and equitable principles of trade, to remove impediments to, and perfect the mechanism of a free and open market and, in general, to protect investors and the public interest. The Exchange's proposal to make the provisions of Rule 116.30 permanent is consistent with these objectives in that it permits the Exchange to better serve its customers by enabling specialists to execute customer orders at improved prices.

B. Self-Regulatory Organization's Statement on Burden on Competition

The Exchange does not believe that the proposed rule change will impose any inappropriate burden on competition.

C. Self-Regulatory Organization's Statement on Comments on the Proposed Rule Change Received from Members, Participants, or Others

The Exchange has neither solicited or received written comments on the proposed rule change.[6]

III. Date of Effectiveness of the Proposed Rule Change and Timing for Commission Action

Within 35 days of the publication of this notice in the **Federal Register** or within such other period (i) as the Commission may designate up to 90 days of such date if it finds such longer period to be appropriate and publishes its reasons for so finding or (ii) as to which the self-regulatory organization consents, the Commission will:

(A) By order approve the proposed rule change, or

(B) Institute proceedings to determine whether the proposed rule change should be disapproved.

IV. Solicitation of Comments

Interested persons are invited to submit written data, views, and arguments concerning the foregoing. Persons making written submissions should file six copies thereof with the Secretary, Securities and Exchange Commission, 450 Fifth Street, N.W., Washington, D.C. 20549. Copies of the submission, all subsequent amendments, all written statements with respect to the proposed rule change that are filed with the Commission, and all written communications relating to the proposed rule change between the Commission and any person, other than those that may be withheld from the public in accordance with the provisions of 5 U.S.C. 552, will be available for inspection and copying at the Commission's Public Reference Section, 450 Fifth Street, N.W.,

---

Release No. 28999 (Mar. 21, 1991), 56 FR 12964 (Mar. 28, 1991) (File No. SR–NYSE–90–48) (''1991 Approval Order''). The Commission subsequently extended the NYSE's pilot program in Securities Exchange Act Release Nos. 30482 (Mar. 16, 1992), 57 FR 10198 (Mar. 24, 1992) (File No. SR–NYSE–92–02) (''1992 Approval Order''); 32031 (Mar. 22, 1993), 58 FR 16563 (Mar. 29, 1993) (File No. SR–NYSE–93–18) (''1993 Approval Order''); 33792 (Mar. 21, 1994), 59 FR 14437 (Mar. 28, 1994) (File No. SR–NYSE–94–06) (''1994 Approval Order''); and 35309 (Jan. 31, 1995) 60 FR 7247 (Feb. 7, 1995) (File No. SR–NYSE–95–02) (''January 1995 Approval Order'').

[2] *See* 1991, 1992, and 1993 Approval Orders, *supra*, note 1.

[3] The NYSE has stated, both to the Commission and to its members, that specialists should only stop stock in a minimum variation market when an imbalance exists on the opposite side of the market and such imbalance is of sufficient size to suggest the likelihood of price improvement. *See, e.g.*, letter from James E. Buck, Senior Vice President and Secretary, NYSE, to Mary N. Revell, Branch Chief, Division of Market Regulation, SEC, dated December 27, 1990; NYSE information memo #1809, dated September 12, 1991.

[4] *See* 1994 Approval Order, *supra*, note 1.

[5] *See* January 1995 Approval Order, *supra*, note 1.

[6] The Commission has received a negative comment letter regarding permanent approval of the NYSE's procedures for stopping stock in minimum variation markets. *See* letter from Junius W. Peake, Monfort Professor of Finance, University of Northern Colorado, to Secretary, SEC, dated March 1, 1995.

Washington, D.C. 20549. Copies of such filing will also be available for inspection and copying at the principal office of the Exchange. All submissions should refer to File No. SR–NYSE–95–14 and should be submitted by July 24, 1995.

For the Commission, by the Division of Market Regulation, pursuant to delegated authority.

Margaret H. McFarland,

Deputy Secretary.

[FR Doc. 95–16398 Filed 6–30–95; 8:45 am]

BILLING CODE 8010–01–M

[Rel. No. IC–21165; No. 812–9392]

Anchor National Life Insurance Company, et al.

June 26, 1995.

AGENCY: Securities and Exchange Commission (''Commission'').

ACTION: Notice of application for an order pursuant to the Investment Company Act of 1940 (the ''1940 Act'').

APPLICANTS: Anchor National Life Insurance Company (''Anchor National''), Variable Annuity Account Four (the ''Variable Account''), and SunAmerica Capital Services, Inc. (''SunAmerica'').

RELEVANT 1940 ACT SECTIONS: Order requested pursuant to Section 6(c) of the 1940 Act for exemptions from the provisions of Sections 26(a)(2)(C) and 27(c)(2) thereof.

SUMMARY OF APPLICATION: Applicants seek an order permitting the deduction of mortality and expense risk and distribution expense risk charges from: the assets of the Variable Account in connection with the offer and sale of certain flexible payment deferred annuity contracts (''Existing Contracts'') and any annuity contracts substantially similar in all material respects to the Existing Contracts (''Future Contracts,'' together with Existing Contracts, the ''Contracts'') which may be sold in the future by the Variable Account; or the assets of any other separate account (''Future Accounts,'' together with the Variable Account, the ''Accounts'') established in the future by Anchor National in connection with the issuance of Future Contracts.

FILING DATE: The application was filed on December 21, 1994, and amended on June 16, 1995.

HEARING OR NOTIFICATION OF HEARING: An order granting the application will be issued unless the Commission orders a hearing. Interested persons may request a hearing on the application by writing to the Secretary of the Commission and serving Applicants with a copy of the request, personally or by mail. Hearing requests must be received by the commission by 5:30 p.m. on July 21, 1995, and should be accompanied by proof of service on Applicants in the form of an affidavit or, for lawyers, a certificate of service. Hearing requests should state the nature of the writer's interest, the reason for the request, and the issues contested. Persons may request notification of a hearing by writing to the Secretary of the Commission.

ADDRESSES: Secretary, Securities and Exchange Commission, 450 5th Street NW., Washington, DC 20549. Applicants, Susan L. Harris, Esq., SunAmerica Inc., 1 SunAmerica Center, Century City, Los Angles, California 90067–6022.

FOR FURTHER INFORMATION CONTACT: Kevin M. Kirchoff, Senior Counsel, or Patrice M. Pitts, Special Counsel, Office of Insurance Products (Division of Investment Management), at (202) 942–0670.

SUPPLEMENTARY INFORMATION: The following is a summary of the application; the complete application is available for a fee from the Public Reference Branch of the Commission.

Applicants' Representations

1. Anchor National is a stock life insurance company incorporated under the laws of the State of California.

2. SunAmerica will serve as distributor of the Contracts. SunAmerica is registered as a broker-dealer pursuant to the Securities Exchange Act of 1934.

3. The Variable Account was established by Anchor National as a separate investment account on November 8, 1994, to act as a funding medium for variable annuity contracts. The Variable Account is registered pursuant to the 1940 Act as a unit investment trust.

4. The Variable Account presently consists of eighteen subaccounts, each of which will invest in the shares of one of four available separate investment series of the Anchor Series Trust or one of fourteen available separate investment series of the SunAmerica Series Trust. Additional underlying funds may become available in the future. Both the Anchor Series Trust and the SunAmerica Series Trust are registered pursuant to the 1940 Act as diversified, open-end, management investment companies.

5. The Variable Account and each of its subaccounts is administered and accounted for as part of the general business of Anchor National, but the income, gains or losses of each subaccount are credited to or charged against the assets held in that subaccount in accordance with the terms of the Contracts, without regard to other income, gains or losses of any other subaccount or arising out of any other business Anchor National may conduct.

6. The Contracts are available for retirement plans which do not qualify for the special federal tax advantages available pursuant to the International Revenue Code and for retirement plans which do qualify for the federal tax advantages available pursuant to the Internal Revenue Code. The Contracts provide for the accumulation of contract values and payment of annuity benefits on a fixed and variable basis.

7. Purchase payments under the Contracts may be made to the general account of Anchor National under one of the Contracts' fixed account options (the ''Fixed Account''), the Variable Account, or allocated between them. The minimum initial purchase payment for a Contract issued on a qualified or non-qualified basis is $50,000 and additional purchase payments may be made in amounts of at least $500.

8. If the contract owner dies during the accumulation period, a death benefit will be payable to the beneficiary upon receipt by Anchor National of due proof of death. The standard death benefit is equal to the greater of:

(1) The contract value at the end of the valuation period during which due proof of death (and an election of the type of payment to the beneficiary) is received by Anchor National; or

(2) The total dollar amount of purchase payments, minus the sum of:

(a) The total amount of any partial withdrawals and partial annuitizations, and

(b) Premium taxes incurred.

9. Where permitted by state law, Anchor National will provide an enhanced death benefit. During the first seven contract years, the enhanced death benefit is determined by recomputing the standard death benefit by accumulating all amounts under (2) above annually at 4% (3% if the contract owner was age 70 or order on the date of issue) to the date of death. After the seventh contract year, the enhanced death benefit is the greater of the amount recomputed as above, or the following:

The contract value at the seventh contract anniversary, plus any purchase payments made since that anniversary, minus the sum of:

(1) The total amount of partial withdrawals and partial annuitizations since such seventh anniversary, and

(2) Premium taxes incurred since the seventh anniversary, all accumulated annually at 4% (3% if the contract owner was age 70 or older on the date of issue) to the date of death.

10. During the accumulation period, amounts allocated to the Variable Account may be transferred among the portfolios and/or the Fixed Account. Both prior to and after the annuity date, contract values may be transferred from the Variable Account to the Fixed Account. Any amounts allocated or transferred to the Fixed Account may be transferred from the Fixed Account to the Variable Account only on or before the annuity date. The first fifteen transactions effecting such transfers in any contract year are permitted without the imposition of a transfer fee. A transfer fee of $25 ($10 in Pennsylvania and Texas) is assessed on the sixteenth and each subsequent transfer within the contract year. This fee will be deducted from contract values which remain in the subaccount (or the Fixed Account) from which the transfer was made. If such remaining contract value is insufficient to pay the transfer fee, then the fee will be deducted from transferred contract values. Applicants represent that the transfer fee is at cost with no anticipation of profit.

11. Although there is a ''free withdrawal'' amount, a contingent deferred sales charge, which is referred to as the withdrawal charge, may be imposed upon certain withdrawals. Withdrawal charges will vary in amount depending upon the contribution year of the purchase payment at the time of withdrawal. During the first nine contribution years the withdrawal charge percentage will be 0.75%. During the tenth and subsequent contribution years there will be no withdrawal charge.

20. Anchor National currently intends to deduct premium taxes at the time of surrender, upon death of the contract owner or upon annuitization. Anchor National reserves the right, however, to deduct premium taxes when they are incurred. Some states assess premium taxes at the time purchase payments are made. Other states assess premium taxes at the time of surrender or when annuity payments begin. Premium taxes range from 0% to 3% in the jurisdictions in which Anchor National anticipates that the Contracts will be sold.

13. The withdrawal charge is deducted from remaining contract values so that the actual reduction in contract value as a result of the withdrawal will be greater than the withdrawal amount requested and paid. For purposes of determining the withdrawal charge, withdrawals will be allocated first to investment income, if any (which generally may be withdrawn free of withdrawal charge), and then to purchase payments on a first-in, first-out basis so that all withdrawals are allocated to purchase payments to which the lowest (if any) withdrawal charge applies.

14. Anchor National deducts a distribution expense risk charge from each portfolio of the Variable Account during each valuation period which is equal, on an annual basis, to 0.15% of the net asset value of each portfolio. This charge is designed to compensate Anchor National for assuming the risk that the cost of distributing the Contracts will exceed the revenues from the withdrawal charge. In no event will this charge be increased. The distribution expense risk charge is assessed during both the accumulation period and the annuity period, but it is not applied to contract values allocated to the Fixed Account.

15. The annuity rates may not be changed under the Contracts. For (1) assuming the risk that the life expectancy of an annuitant will be greater than that assumed in the guaranteed annuity purchase rates, (2) waiving the withdrawal charge in the event of the death of the contract owner, and (3) providing both a standard and enhanced death benefit prior to the annuity date, Anchor National deducts a mortality risk charge from the Variable Account. The charge is deducted from each subaccount of the Variable Account during each valuation period at an annual rate of 1.02% of the net asset value of each subaccount. The portion of the total mortality risk charge attributable to Anchor National's assuming (1) and (2) above and providing a standard death benefit is 0.90%, the balance of 0.12% is assessed for providing the enhanced death benefit.

16. If the mortality risk charge is insufficient to cover the actual costs of assuming the mortality risks, Anchor National will bear the loss. If the charge proves more than sufficient, the excess will be a profit for Anchor National. To the extent Anchor National realizes any such profit, it may be used at its discretion, including for offsetting losses experienced when the mortality risk charge is insufficient. The mortality risk charge may not be increased under the Contracts.

17. There is no annual contract charge imposed by Anchor National to help defray the costs of administering the Contracts. However, Anchor National deducts an expense risk charge from the Variable Account to cover such administrative costs. The charge is deducted from each subaccount of the Variable Account during each valuation period at an annual rate of 0.35% of the net asset value of each portfolio. If the expense risk charge is insufficient to cover the actual cost of administering the Contracts, Anchor National will bear the loss; however, if the charge is more than sufficient, the excess will be a profit for Anchor National. To the extent that Anchor National realizes any such profit, it may be used at its discretion, including for offsetting losses when the expense risk charge is insufficient. The expense risk charge may not be increased under the Contract.

Applicants' Legal Analysis and Conditions

1. Applicants request an order pursuant to Section 6(c) of the 1940 Act exempting them from Sections 26(a)(2)(C) and 27(c)(2) thereof to the extent necessary to permit the deduction of mortality and expense risk and distribution expense risk charges from the assets of the Accounts in connection with the issue and sale of the Contracts.

2. Pursuant to Section 6(c) of the 1940 Act the Commission may, by order upon application, conditionally or unconditionally exempt any person, security, or transaction, or any class or classes of persons, securities or transactions, from any provision or provisions of the 1940 Act or from any rule or regulation thereunder, if and to the extent that such exemption is necessary or appropriate in the public interest and consistent with the protection of investors and the purposes fairly intended by the policy and provisions of the 1940 Act.

3. Sections 26(a)(2)(C) and 27(c)(2) of the 1940 Act, in pertinent part, prohibit a registered unit investment trust and any depositor thereof or underwriter therefor from selling periodic payment plan certificates unless the proceeds of all payments (other than sales load) are deposited with a qualified bank as trustee or custodian and are held under arrangements which prohibit any payment to the depositor or principal underwriter except a fee, not exceeding such reasonable amount as the Commission may prescribe, for performing bookkeeping and other administrative services of a character normally performed by the bank itself.

4. Applicants submit that their request for exemptive relief for deduction of the mortality and expense risk and distribution expense risk charges from the assets of the Accounts in connection with the issue and sale of the Contracts would promote competitiveness in the variable annuity

contract market by eliminating the need for redundant exemptive applications, thereby reducing Applicants' administrative expenses and maximizing the efficient use of their resources. Applicants further submit that the delay and expense involved in having repeatedly to seek exemptive relief would impair their ability effectively to take advantage of business opportunities as they arise. Further, if Applicants were required repeatedly to seek exemptive relief with respect to the same issues addressed in this application, investors would not receive any benefit or additional protection. Thus, Applicants believe that the requested exemptions are appropriate in the public interest and consistent with the protection of investors and purposes fairly intended by the policy and provisions of the 1940 Act.

5. Applicants assert that the mortality and expense risk charge of 1.25% (which includes all risk charges imposed under the Existing Contracts with the exception of the 0.12% risk charge for the enhanced death benefit) is reasonable in relation to the risks assumed by Anchor National under the Existing Contracts and reasonable in amount as determined by industry practice with respect to comparable annuity products. Applicants state that these determinations are based on their analysis of publicly available information about similar industry practices, and on consideration of such factors as current charge levels and benefits provided, the existence of expense charge guarantees and guaranteed annuity rates. Anchor National undertakes to maintain at its home office a memorandum, available to the Commission upon request, setting forth in detail the methodology used in making these determinations.

6. Applicants assert that the mortality risk charge of 0.12% for the enhanced death benefit is reasonable in relation to the risks assumed by Anchor National under the Existing Contracts for the enhanced death benefit. Anchor National undertakes to maintain at its home office a memorandum, available to the Commission upon request, setting forth in detail the methodology used in making this determination.

7. Applicants represent that, prior to relying on exemptive relief resulting from this application in connection with Future Contracts funded through the Accounts, Applicants will determine that any mortality and expense risk charges under such contracts are reasonable in amount as determined by industry practice with respect to comparable annuity products and/or reasonable in relation to the risks assumed by Anchor National. Applicants represent that Anchor National will maintain and make available to the Commission upon request a memorandum setting forth the basis of such conclusion.

8. Anchor National has concluded that there is a reasonable likelihood that the Variable Account's distribution financing arrangement will benefit the Variable Account and its investors. Anchor National represents that it will maintain and make available to the Commission upon request a memorandum setting forth the basis of such conclusion.

9. Applicants represent that, prior to relying on exemptive relief resulting from this application in connection with Future Contracts funded through the Accounts, Applicants will determine that there is a reasonable likelihood that the distribution financing arrangement will benefit the Variable Account and its investors or Future Accounts and their investors. Anchor National represents that it will maintain and make available to the Commission upon request a memorandum setting forth the basis of such conclusion.

10. Anchor National represents that the assets of the Variable Account and any Future Accounts will be invested only in management investment companies which undertake, in the event they should adopt a plan for financing distribution expenses pursuant to Rule 12b–1 under the 1940 Act, to have such plan formulated and approved by their board of directors, the majority of whom are not ''interested persons'' of the management investment company within the meaning of Section 2(a)(19) of the 1940 Act.

11. Applicants represent that the amount of any withdrawal charge imposed under the Contracts, when added to any distribution expense risk charge previously paid thereunder, will not exceed 9% of purchase payments, and that Anchor National will monitor the account of each Contract owner to ensure that this limitation is not exceeded.

Conclusion

For the reasons summarized above, Applicants represent that the exemptions requested are necessary and appropriate in the public interest and consistent with the protection of investors and the purposes fairly intended by the policy and provisions of the 1940 Act.

For the Commission, by the Division of Investment Management, pursuant to delegated authority.

Margaret H. McFarland,

Deputy Secretary.

[FR Doc. 95–16210 Filed 6–30–95; 8:45 am]

BILLING CODE 8010–01–M

[Rel. No. IC–21164; 812–9508]

Kansas City Life Insurance Company, et al.

June 26, 1995.

AGENCY: Securities and Exchange Commission (''SEC'').

ACTION: Notice of application for exemption under the Investment Company Act of 1940 (the ''Act'').

APPLICANTS: Kansas City Life Insurance Company (''Kansas City Life''), Kansas City Life Variable Annuity Separate Account (the ''Separate Account''), and Sunset Financial Services, Inc. (''Sunset Financial'').

RELEVANT ACT SECTIONS: Order requested under section 6(c) of the Act that would exempt applicants from sections 26(a)(2)(C) and 27(c)(2) of the Act.

SUMMARY OF APPLICATION: Applicants request an order to permit them to deduct a mortality and expense risk charge from the assets of the Separate Account or any other separate account (''Other Accounts'') that Kansas City Life may establish in the future to support certain individual flexible premium payment deferred variable annuity contracts (''Contracts'') as well as other variable annuity contracts offered in the future that are similar in all material respects to the Contracts (''Future Contracts'').

FILING DATES: The application was filed on March 3, 1995, and amended on June 8, 1995.

HEARING OR NOTIFICATION OF HEARING: An order granting the application will be issued unless the SEC orders a hearing.

Interested persons may request a hearing by writing to the SEC's Secretary and serving applicants with a copy of the request, personally or by mail. Hearing requests should be received by the SEC by 5:30 p.m. on July 18, 1995 and should be accompanied by proof of service on applicants, in the form of an affidavit or, for lawyers, a certificate of service. Hearing requests should state the nature of the writer's interest, the reason for the request, and the issues contested. Persons may request notification of a hearing by writing to the SEC's Secretary.

ADDRESSES: Secretary, SEC, 450 5th Street NW., Washington, D.C. 20549. Applicants, Kansas City Life Insurance

Company, Kansas City Life Variable Annuity Separate Account, 3520 Broadway, Kansas City, Missouri 64141–6139, Sunset Financial Services, Inc. 3200 Capital Boulevard South, Olympia, Washington 98501–3396.

FOR FURTHER INFORMATION CONTACT: Sarah A. Buescher, Staff Attorney, at (202) 942–0573, or C. David Messman, Branch Chief, at (202) 942–0564 (Division of Investment Management, Office of Investment Company Regulation).

SUPPLEMENTARY INFORMATION: The following is a summary of the application. The complete application may be obtained for a fee at the SEC's Public Reference Branch.

Applicants' Representations

1. Kansas City Life is a stock life insurance company organized in Missouri and licensed to do business in 45 states and the District of Columbia.

2. The Separate Account is a separate investment account established by Kansas City Life to fund variable annuity contracts. Kansas City Life is the depositor and sponsor of the Separate Account. The Separate Account is registered as a unit investment trust under the Act. Units of interest in the Separate Account will be registered under the Securities Act of 1933. The Separate Account is currently divided into eleven subaccounts. Each subaccount will invest exclusively in the shares of an investment portfolio of one of three registered investment companies.

3. Sunset Financial, an indirect wholly-owned subsidiary of Kansas City Life, will serve as the distributor and principal underwriter for the Contracts. Sunset Financial is registered under the Securities Exchange Act of 1934 as a broker-dealer and is a member of the National Association of Securities Dealers, Inc.

4. The Contracts are individual flexible premium deferred variable annuity contracts. They may be purchased on a non-tax qualified basis or in connection with retirement plans entitled to special federal income tax treatment. The Contracts require a minimum initial premium of $5,000 or annualized payments of $600. The minimum subsequent premium payment is $50. Contract owners may allocate premium payments to one or more subaccounts of the Separate Account and to the Fixed Account, which is part of Kansas City Life's General Account. Premium payments allocated to the Fixed Account will be credited with a predetermined rate of interest. The value of a Contract (''Contract Value'') is the sum of the value of the Contract's investments in the Separate Account and the Fixed Account.

5. The Contracts provide for a death benefit if the annuitant dies before the maturity date. The death benefit is equal to the greater of: (i) the guaranteed death benefit less any indebtedness; and (ii) the Contract Value less any indebtedness on the date applicants receive proof of the annuitant's death. The guaranteed death benefit is equal to the initial premium payment plus any subsequent premium payments. Any partial surrender will decrease the guaranteed death benefit by the same percentage that the surrender decreases the Contract Value.

6. Before the maturity date, the owner may request a transfer of all or part of the amount in a subaccount or the Fixed Account to another subaccount or to the Fixed Account. The total amount transferred each time must be at least $250, or the entire amount in the subaccount or the Fixed Account, if less than $250. Only one transfer from the Fixed Account may be made in each 12-month period beginning on the date the Contract is issued (''Contract Year''), and that transfer may not be for more than 25% of the unloaned value of the Fixed Account. The first six transfers each Contract Year are free. Kansas City Life will assess a $25 transfer processing fee for subsequent transfers. Kansas City Life does not expect a profit from this fee, which is guaranteed and cannot be increased. Applicants rely on rule 26a–1 to deduct this fee.[1]

7. Applicants will charge a contingent deferred sales charge (''Surrender Charge'') for certain withdrawals. The amount of the Surrender Charge is as follows:

Contract year in which surrender occurs	Charge as percentage of amount surrendered
1	7
2	7
3	7
4	6
5	5
6	4
7	2
8 and after	0

If the owner surrenders the entire Contract, the Surrender Charge will be deducted from the Contract Value. If the owner surrenders part to the Contract, the Surrender Charge will be deducted from the amount surrendered or from the remaining Contract Value, according to the owner's instructions.

8. An owner may participate in a systemic partial surrender plan whereby the owner instructs Kansas City Life to surrender a requested dollar amount on a periodic basis. If an owner does not participate in the plan, the first partial surrender during a Contract Year will not be subject to a Surrender Charge if it does not exceed 10% of the Contract Value at the time of the surrender. This free partial surrender is limited to the first partial surrender of the Contract Year, even if the amount surrendered is less than 10% of the Contract Value. Upon a full surrender, if the owner has not elected to participate in the systemic partial surrender plan and has not received any partial surrenders during a Contract Year, only 90% of the Contract Value will be subject to a Surrender Charge. If the owner participates in the systemic partial surrender plan, up to 10% of the Contract Value may be surrendered each Contract Year without a Surrender Charge. Once the amount of the surrender exceeds the 10% limit, the applicable Surrender Charge will be deducted from the remaining Contract Value.

9. An annual administration fee of $30 will be deducted from the Contract Value for administrative expenses at the beginning of each Contract Year. Applicants will waive this fee for Contracts with Contract Values of $50,000 or more at the beginning of the Contract Year. No annual administration fee is payable after the maturity date of the Contract. Prior to the maturity date of a Contract, Kansas City Life also will deduct a daily asset-based administration charge from the assets of the Separate Account at an annual rate of .15%. Applicants represent that the annual administration fee and the asset-based administration charge are guaranteed and will not increase. In addition, applicants represent that they do not expect to make a profit from these charges. Applicants will rely on rule 26a–1 to deduct these fees.

10. Prior to the maturity date, Kansas City Life proposes to deduct a daily mortality and expense risk charge from the assets of the Separate Account. The aggregate mortality and expense risk charge will be equal to an annual rate of 1.25%. Of that amount, approximately .70% is for mortality risk and .55% is for expense risk. Kansas City Life assumes the mortality risk that annuitants may live for a longer period than estimated when the guarantees in the Contract were established, thus

[1] Rule 26a–1 allows for payment of a fee for bookkeeping and other administrative expenses provided that the fee is no greater than the cost of the services provided, without profit.

requiring Kansas City Life to pay out more in annuity income than it had planned. Kansas City Life also assumes a mortality risk in that it may be obligated to pay a death benefit in excess of the Contract Value. The expense risk assumed by Kansas City Life is that the other fees may be insufficient to cover actual expenses.

11. If the mortality and expense risk charge is insufficient to cover the actual cost of the risks, Kansas City Life will bear the shortfall. Conversely, if the charge is more than sufficient, the excess will be profit to Kansas City Life and will be available for any proper corporate purpose.

12. If premium taxes are applicable to a Contract, they will be deducted upon surrender of the Contract or upon application of the Contract proceeds to an annuity payment option or lump sum payment at the maturity date.

Applicants' Legal Analysis

1. Applicants request an exemption pursuant to section 6(c) from sections 26(a)(2)(C) and 27(c)(2) to the extent necessary to permit the deduction from the Separate Account and Other Accounts that Kansas City Life may establish in the future of the 1.25% Mortality and Expense Risk Charge. Sections 26(a)(2)(C) and 27(c)(2) of the Act, in relevant part, prohibit a registered unit investment trust, its depositor or principal underwriter, from selling periodic payment plan certificates unless the proceeds of all payments, other than sales loads, are deposited with a qualified bank and held under arrangements which prohibit any payment to the depositor or principal underwriter except a reasonable fee, as the Commission may prescribe, for performing bookkeeping and other administrative duties normally performed by the bank itself.

2. Section 6(c) of the Act authorizes the Commission to exempt any person from any provision of the Act or any rule or regulation thereunder, if and to the extent that such exemption is necessary or appropriate in the public interest and consistent with the protection of investors and the purposes fairly intended by the policy and provisions of the Act.

3. Applicants also request relief with respect to Future Contracts that may be issued from the Separate Account and Other Accounts. Applicants represent that the terms of the relief requested with respect to any Future Contracts are consistent with the standards of section 6(c) of the Act. Without the requested relief, applicants represent that they would have to request and obtain exemptive relief for Future Contracts and any Other Account. Applicants represent that these additional requests for exemptive relief would present no issues under the Act not already addressed in this application, and that investors would not receive any benefit or additional protections thereby.

4. Applicants represent that the requested relief is appropriate in the public interest, because it would promote competitiveness in the variable annuity contract market by eliminating the need for applicants to file redundant exemptive applications, thereby reducing their administrative expenses and maximizing the efficient use of resources. Elimination of the delay and expense involved in repeatedly seeking exemptive relief would enhance applicants' ability effectively to take advantage of business opportunities as they arise. Applicants further represent that their requested relief is consistent with the protection of investors and the purposes fairly intended by the policy and provisions of the Act.

5. Applicants represent that the 1.25% per annum mortality and expense risk charge is within the range of industry practice for comparable variable annuity contracts. This representation is based on an analysis of publicly available information regarding similar contracts of other companies, taking into consideration such features as current charge levels, death benefit guarantees, and investment options under the Contracts. Kansas City Life will maintain at its home office, and make available to the SEC upon request, a memorandum setting forth in detail the products analyzed and the methodology and results of applicants' comparative review.

6. Prior to relying on any exemptive relief granted herein with respect to Future Contracts issued by the Separate Account or Other Accounts, applicants will determine that the mortality and expense risk charge will be within the range of industry practice for comparable contracts. Kansas City Life will maintain at its home office a memorandum, available to the Commission upon request, setting forth the methodology used in making these determinations.

7. Kansas City Life acknowledges that distribution expenses may be paid from profits derived from the mortality and expense risk charges. Kansas City Life has concluded that there is a reasonable likelihood that the proposed distribution financing arrangement will benefit the Separate Account and the Contract owners. Kansas City Life will maintain and make available to the Commission upon request a memorandum at its home office setting forth the basis of such conclusion.

8. Prior to relying on any exemptive relief granted herein with respect to Future Contracts issued by the Separate Account or Other Accounts, applicants will determine that there is a reasonable likelihood that the distribution financing arrangement will benefit the Separate Account, Other Accounts, and their investors. Kansas City Life will maintain and make available to the Commission upon request a memorandum at its home office setting forth the basis of such conclusion.

9. The Separate Account will invest in a management investment company that has adopted a plan pursuant to rule 12b–1 under the Act only if that company has undertaken to have such plan formulated and approved by its board of directors, a majority of whom are not ''interested persons'' of the company within the meaning of section 2(a)(19) of the Act.

For the Commission, by the Division of Investment Management, pursuant to delegated authority.

Margaret H. McFarland,

Deputy Secretary.

[FR Doc. 95–16211 Filed 6–30–95; 8:45 am]

BILLING CODE 8010–01–M

SMALL BUSINESS ADMINISTRATION

[Declaration of Economic Injury Disaster Loan Area #8546]

Virginia (And a Contiguous County in North Carolina); Declaration of Disaster Loan Area

Henry County and the contiguous counties of Franklin, Patrick, and Pittsylvania, and the independent City of Martinsville in the Commonwealth of Virginia, and Rockingham County in the State of North Carolina constitute an economic injury disaster area as a result of damages caused by a fire in the City of Martinsville which occurred on April 25, 1995. Eligible small businesses without credit available elsewhere and small agricultural cooperatives without credit available elsewhere may file applications for economic injury assistance until the close of business on March 28, 1996, at the address listed below: U.S. Small Business Administration, Disaster Area 1 Office, 360 Rainbow Blvd. South, 3rd Floor, Niagara Falls, NY 14303, or other locally announced locations. The interest rate for eligible small businesses and small agricultural cooperatives is 4 percent.

The economic injury number for the State of North Carolina is 854700.

(Catalog of Federal Domestic Assistance Program No. 59002.)

Dated: June 28, 1995.

Cassandra M. Pulley,

Deputy Administrator.

[FR Doc. 95–16299 Filed 6–30–95; 8:45 am]

BILLING CODE 8025–01–M

DEPARTMENT OF TRANSPORTATION

Office of the Secretary

Reports, Forms, and Recordkeeping Requirements

AGENCY: Department of Transportation (DOT), Office of the Secretary.

ACTION: Notice.

SUMMARY: This notice lists those forms, reports, and recordkeeping requirements imposed upon the public which were transmitted by the Department of Transportation to the Office of Management and Budget (OMB) for its approval in accordance with the requirements of the Paperwork Reduction Act of 1980 (44 U.S.C. Chapter 35).

DATES: June 23, 1995.

ADDRESSES: Written comments on the DOT information collection requests should be forwarded, as quickly as possible, to Edward Clarke, Office of Management and Budget, New Executive Office Building, Room 10202, Washington, D.C. 20503. If you anticipate submitting substantive comments, but find that more than 10 days from the date of publication are needed to prepare them please notify the OMB official of your intent immediately.

FOR FURTHER INFORMATION CONTACT: Copies of the DOT information collection requests submitted to OMB may be obtained from Susan Pickrel or Annette Wilson, Information Resource Management (IRM) Strategies Division, M–32, Office of the Secretary of Transportation, 400 Seventh Street, S.W., Washington, D.C. 20590, (202) 366–4735.

SUPPLEMENTARY INFORMATION: Section 3507 of Title 44 of the United States Code, as adopted by the Paperwork Reduction Act of 1980, requires that agencies prepare a notice for publication in the **Federal Register**, listing those information collection requests submitted to OMB for approval or renewal under that Act. OMB reviews and approves agency submissions in accordance with criteria set forth in that Act. In carrying out its responsibilities, OMB also considers public comments on the proposed forms and the reporting and recordkeeping requirements. OMB approval of an information collection requirement must be renewed at least once every three years.

Items Submitted to OMB for Review

The following information collection requests were submitted to OMB on June 23, 1995:

DOT No: 4068.
OMB No: 2138–0041.
Administration: Research and Special Programs Administration.
Title: Airline Service Quality Performance.
Need for Information: Title 14 CFR part 234 prescribes the requirements for airline service quality performance reports.
Proposed Use of Information: The information will be used to produce consumer reports for the travelling public and for air traffic control modeling.
Frequency: Monthly.
Burden Estimate: 2,340 hours.
Respondents: Large scheduled passenger airlines.
Form(s): None.
Average Burden Hours Per Response: 20 hours.

DOT No: 4069.
OMB No: 2120–0057.
Administration: Federal Aviation Administration.
Title: Safety Improvement Report/ Accident Prevention Counselor Activity Reports.
Need for Information: Title 49 USC 44701(a)(2)(c) authorizes the Secretary of Transportation to exercise and perform his or her powers and duties under the law in such manner as will best tend to reduce or eliminate the possibility or recurrence of accidents in air transportation or other commerce.
Proposed Use of Information: The information collected on Form 8740–5 will be used by the public to alert FAA of conditions that may be hazardous to flight safety. Once noted by the FAA, hazardous conditions can be corrected. The information collected on Form 8740–6 will provide information used to document and support the activities of approximately 3,777 volunteer Accident Prevention Counselors who constitute a major resource of the Accident Prevention Program.
Frequency: As required.
Burden Estimate: 4,614 hours.
Respondents: Individuals, governments.
Form(s): FAA Forms 8740–5 and 8740–6.
Average Burden Hours Per Response: 6 minutes.

DOT No: 4070.
OMB No: 2127–0541.
Administration: National Highway Traffic Safety Administration.
Title: Owner's Manual Requirements—Motor Vehicle and Motor Vehicle Equipment.
Need for Information: Title 49 USC 30117 authorizes the Secretary of Transportation to require that manufacturers provide technical information related to the performance and safety specified in the Federal Motor Vehicle Safety Standards for the purposes of educating the consumer and providing safeguards against improper use.
Proposed Use of Information: The information will be used to inform vehicle owners and passengers about the proper use of the vehicle or equipment.
Frequency: On occasion.
Burden Estimate: 1,095 hours.
Respondents: Businesses, small businesses.
Form(s): None.
Average Burden Hours Per Response: 120 minutes.

DOT No: 4071.
OMB No: 2127–0039.
Administration: National Highway Traffic Safety Administration.
Title: Petitions for Hearings on Notifications and Remedy on Defects.
Need for Information: Title 49 USC 30118 and 30120 establish procedures for any person to petition NHTSA for a hearing to determine whether a manufacturer has met its obligation to notify vehicle owners, purchasers and dealers of a defect or noncompliance with safety standards, and whether the remedy had been satisfactory.
Proposed Use of Information: The information will be used to ensure that a manufacturer meets its obligation to notify owners, purchasers and dealers of any safety-related defects or noncompliance and to remedy the problems by repair, repurchase or replacement.
Frequency: On occasion.
Burden Estimate: 21 hours.
Respondents: Individuals.
Form(s): None.
Average Burden Hours Per Response: 60 minutes.

DOT No: 4072.
OMB No: 2127–0025.
Administration: National Highway Traffic Safety Administration.
Title: Confidential Business Information.
Need for Information: Title 49 CFR Part 512 establishes procedures to be followed by vehicle and equipment manufacturers when they are requesting confidential treatment of information they have submitted to NHTSA.

Proposed Use of Information: This collection will be used to ensure that confidential information submitted to NHTSA is accorded the proper treatment.

Frequency: On occasion.

Burden Estimate: 600 hours.

Respondents: Motor vehicle manufacturers.

Form(s): None.

Average Burden Hours Per Response: 12 minutes.

DOT No: 4073.

OMB No: 2132–0008.

Administration: Federal Transit Administration.

Title: National Transit Database.

Need for Information: Title 49 USC 5335 establishes a reporting system to accumulate mass transportation financial and operating information and a uniform system of accounts and records.

Proposed Use of Information: The information will be used by transit systems as a management planning tool. It will be used by all levels of government for making policy analysis and investment decisions. Federal, State, and local governments, transit agencies/boards, labor unions, manufacturers, researchers, consultants, and universities will use the information as a resource for making transit-related decisions. The information will provide an accurate and validated transit information database.

Frequency: Annually.

Burden Estimate: 224,890 hours.

Respondents: Beneficiaries and recipients of Section 5307 (formerly Section 9) funds.

Form(s): 001, 100, 200, 300 and 400 Series.

Average Burden Hours Per Response: 430 hours.

Issued in Washington, D.C. on June 23, 1995.

Paula R. Ewen,

Manager, IRM Strategies Division.

[FR Doc. 95–16243 Filed 6–30–95; 8:45 am]

BILLING CODE 4910–62–P

NAFTA Land Transportation Standards Subcommittee

AGENCY: Office of the Secretary, Office of International Transportation and Trade.

ACTION: Notice.

SUMMARY: This notice announces that the Department of Transportation (DOT) has established a public docket for information related to the North American Free Trade Agreement's (NAFTA) Land Transportation Standards Subcommittee (LTSS).

SUPPLEMENTARY INFORMATION: The Department of Transportation announces the availability for public inspection of documents pertaining to the activities of the LTSS and its working groups in Docket no. OST–95–246. In addition to certain DOT-generated documents and joint reports resulting from consultations among the United States, Canada, and Mexico, all LTSS-related statements received by DOT from industry associations, transportation labor unions, brokers, shippers, public safety advocates, and others will be available for review at the address below, between 9:00 a.m and 5:00 p.m., e.t., Monday through Friday, except national holidays. The Department will deposit information in the docket periodically, and will publish notification of its availability in the **Federal Register** as needed. The docket will remain open until January 31, 2000.

FOR FURTHER INFORMATION CONTACT: David DeCarme, Chief, Maritime, Surface, and Facilitation Division, Office of International Transportation and Trade, Office of the Secretary of Transportation, at (202) 366–2892.

ADDRESSES: Documents may be examined or photo copied at the U.S. Department of Transportation, Room PL–401, 400 Seventh Street, S.W., Washington, DC 20590.

Dated: June 27, 1995.

Arnold Levine,

Director, Office of International Transportation and Trade.

[FR Doc. 95–16242 Filed 6–30–95; 8:45 am]

BILLING CODE 4910–62–P

Coast Guard

[CGD 95–056]

Chemical Transportation Advisory Committee (CTAC); Charter Renewal

AGENCY: Coast Guard, DOT.

ACTION: Notice of charter renewal.

SUMMARY: The Secretary of Transportation has renewed the CTAC charter to remain in effect for a period of two years from May 27, 1995 until May 27, 1997. The purpose of CTAC is to provide expertise on regulatory requirements for promoting safety in the transportation of hazardous materials on vessels and the transfer of these materials between vessels and waterfront activities. CTAC acts solely in an advisory capacity to the Coast Guard.

FOR FURTHER INFORMATION CONTACT: Captian Kevin J. Eldridge, Executive Director, or Lieutenant Rick J. Raksnis, Executive Assistant, Commandant (G–MTH–1), U.S. Coast Guard, 2100 Second Street, SW, Washington, DC 20593–0001, telephone (202) 267–1217.

Dated: June 26, 1995.

G.N. Naccara,

Captain, U.S. Coast Guard Acting Chief, Office of Marine Safety, Security and Environmental Protection.

[FR Doc. 95–16297 Filed 6–30–95; 8:45 am]

BILLING CODE 4910–14–M

Federal Aviation Administration

Approval of Noise Compatibility Program

Palm Beach International Airport

West Palm Beach, FL

AGENCY: Federal Aviation Administration, DOT.

ACTION: Notice.

SUMMARY: The Federal Aviation Administration (FAA) announces its findings on the noise compatibility program submitted by Palm Beach County under the provisions of Title I of the Aviation Safety and Noise Abatement Act of 1979 Pub. L. 96–193) and 14 CFR part 150. These findings are made in recognition of the description of Federal and nonfederal responsibilities in Senate Report No. 96–52 (1980). On February 1, 1993, the FAA determined that the noise exposure maps submitted by Palm Beach County under Part 150 were in compliance with applicable requirements. On November 18, 1994, the FAA determined that the revised future noise exposure map was in compliance with applicable requirements. On May 17, 1995, the Administrator approved the Palm Beach International Airport noise compatibility program. Twenty-four (24) recommendations of the program were approved and one (1) recommendation was partially approved.

EFFECTIVE DATE: The effective date of the FAA's approval of the Palm Beach International Airport noise compatibility program is May 17, 1995.

FOR FURTHER INFORMATION CONTACT: Tommy J. Pickering, P.E., Federal Aviation Administration, Orlando Airports District Office, 9677 Tradeport Drive, Suite 130, Orlando, Florida 32827–3596, (407) 648–6583. Documents reflecting this FAA action may be reviewed at this same location.

SUPPLEMENTARY INFORMATION: This notice announces that the FAA has given its overall approval to the noise compatibility program for the Palm

Beach International Airport, effective May 17, 1995.

Under section 104(a) of the Aviation Safety and Noise Abatement act (ASNA) of 1979 (hereinafter referred to as ''the Act''), an airport operator who has previously submitted a noise exposure map may submit to the FAA a noise compatibility program which sets forth the measures taken or proposed by the airport operator for the reduction of existing noncompatible land uses and prevention of additional noncompatible land uses within the area covered by the noise exposure maps. The Act requires such programs to be developed in consultation with interested and affected parties including local communities, government agencies, airport users, and FAA personnel.

Each airport noise compatibility program developed in accordance with Federal Aviation Regulations (FAR) part 150 is a local program, not a Federal program. The FAA does not substitute its judgment for that of the airport proprietor with respect to which measure should be recommended for action. The FAA's approval or disapproval of FAR part 150 program recommendations is measured according to the standards expressed in part 150 and the Act, and is limited to the following determinations;

a. The noise compatibility program was developed in accordance with the provisions and procedures of FAR part 150;

b. Program measures are reasonably consistent with achieving the goals of reducing existing noncompatible land uses around the airport and preventing the introduction of additional noncompatible land uses;

c. Program measurers would not create an undue burden on interstate or foreign commerce, unjustly discriminate against types or classes of aeronautical users, violate the terms of airport grant agreements, or intrude into areas preempted by the Federal Government; and

d. Program measures relating to the use of flight procedures can be implemented within the period covered by the program without derogating safety, adversely affecting the efficient use and management of the navigable airspace and air traffic control systems, or adversely affecting other powers and responsibilities of the Administrator prescribed by law.

Specific limitations with respect to FAA's approval of an airport noise compatibility program are delineated in FAR part 150, § 150.5. Approval is not a determination concerning the acceptability of land uses under Federal, state, or local law. Approval does not by itself constitute an FAA implementing action. A request for Federal action or approval to implement specific noise compatibility measures may be required, and a FAA decision on the request may require an environmental assessment of the proposed action. Approval does not constitute a commitment by the FAA to financially assist in the implementation of the program nor a determination that all measures covered by the program are eligible for grant-in-aid funding from the FAA. Where Federal funding is sought, requests for project grants must be submitted to the FAA Airports District Office in Orlando, Florida.

Palm Beach County submitted to the FAA on January 29, 1993, the noise exposure maps, descriptions, and other documentation produced during the noise compatibility planning study conducted from March 21, 1991, through October 4, 1994. The Palm Beach International Airport Noise exposure maps were determined by FAA to be in compliance with applicable requirements on February 1, 1993. A revised future noise exposure map was submitted to the FAA on October 6, 1994. The revised future noise exposure map was determined by FAA to be in compliance with applicable requirements on November 18, 1994. Notice of these determinations was published in the **Federal Register**.

The Palm Beach International Airport study contains a proposed noise compatibility program comprised of actions designed for phased implementation by airport management and adjacent jurisdictions from the date of study completion to the year 1998. It was requested that FAA evaluate and approve this material as a noise compatibility program as described in section 104(b) of the Act. The FAA began its review of the program on November 18, 1994, and was required by a provision of the Act to approve or disapprove the program within 180 days (other than the use of new flight procedures for noise control). Failure to approve or disapprove such program within the 180-day period shall be deemed to be an approval of such program.

The submitted program contained twenty-five (25) proposed actions for noise mitigation on and off the airport. The FAA completed its review and determined that the procedural and substantive requirements of the Act and FAR part 150 have been satisfied. The overall program, therefore, was approved by the Administrator effective May 17, 1995.

Outright approval was granted for twenty-four (24) of the specific program elements. One (1) program element for local environmental review was partially approved. Measures pertaining to FAR part 77 height criteria associated with Part 77 height/hazard zoning was disapproved. The approval action was for the following program elements:

Measure and description	NCP pages
Operational elements:	
1. Noise Abatement Flight Paths for Turbojet Aircraft. Runways 27R, 13 and 31: Eliminate multiple noise abatement flight paths from these runways. All departing aircraft shall be assigned runway heading or corresponding wind corrected heading, regardless of Part 36 Stage. Runway 9L: Continue the use of multiple departure flight paths but eliminate the north turn departure track (075 heading) at the point in time at which the elimination of the northern track would not increase the cumulative noise level at any residential noise-sensitive area within the 65 dB DNL contour by 1.5 dB or greater. After the north departure path is eliminated, all aircraft shall be assigned runway heading, or corresponding wind corrected heading regardless of Part 36 Stage. The flight track improvements reduce the population within the [DNL 65 dB] noise contours by approximately 13%, from 9,889 to 8,636. FAA Action: Approved as a voluntary measure, wind weather and traffic permitting. The airport operator intends to prepare annual DNL contours (Measure 17, below), which will assist in carrying out the recommendations for Runway 9L. In response to the FAA's notice about the PBIA Part 150 NCP, the FAA received 59 comments, 54 of which were from residents of communities each of the airport (Runway 9 end) and supported continuation of multiple flight tracks. The NCP and a February 15, 1995, letter from the airport sponsor indicate that the Part 150 Technical Advisory Committee (TAC) carefully considered the alternative of continued use of multiple flight tracks. The TAC included, among others, voting representatives from the Town of Haverhill, the City of West Palm Beach, the Town of Palm Beach, the Citizens Committee on Aircraft Noise, the Old El Cid Noise Reduction Committee, and counsel for the residents who sued the airport in 1989. The alternative selected was considered a compromise because only some neighborhoods to the east supported continuation or increase of fanning, while the City of West Palm Beach Commission, by Resolution, and the majority of neighborhoods within West Palm Beach supported total elimination of fanning. The majority of the population within the five-year DNL 65 dB contour reside in West Palm Beach.	NCP, pages 31–34, Tables 2.2 (page 15) and 3.2 (page 61); PBIA Noise Abatement Bulletin.
2. Preferential Runway Use Program. Corporate jet departures will be assigned Runway 31 when in the west flow. During the hours of 10 p.m. to 10 a.m. (off peak), Runway 27R will be the preferred runway, when safety and weather permit; it also will be the preferred calm wind runway during this period. During the hours of 10 a.m. to 10 p.m. (peak traffic period), runway 9L will be the preferred and designated calm wind runway. FAA Action: Approved as a voluntary measure.	NCP, pages 35–36, Tables 2.2 and 3.1; PBIA Noise Abatement Bulletin; Appendix Volume, Table 1, TAC Meeting #9, page 4.
3. Noise Abatement Departure Procedures. The Department of Airports (DOA) is in the process of analyzing the two Noise Abatement Departure Procedures (NADP) alternatives from the revised AC 91–53A. Based on the results of that analysis, the DOA will work with the Citizen's Committee on Aircraft Noise (CCAN) to select a procedure (or procedures, if the FAA permits) for implementation at the airport. The DOA will provide test results and final recommendations to the FAA at the earliest possible date, including an evaluation of any effect on the Noise Exposure Maps (NEM). FAA Action: Approved as a voluntary measure. Analysis of NADP alternatives for air carriers greater than 75,000 pounds (mgtw) is approved FOR STUDY ONLY. The airport operator may submit supplemental information, including the noise benefits, upon completion of its study and may request approval under Part 150 of specific departure procedure(s) to be used for large aircraft.	NCP, pages 36–38, and Tables 2.2 and 3.1; PBIA Noise Abatement Bulletin, FAA Advisory Circular 91–53A, and letters dated 1/12/95 and 3/14/95 from PBIA.
4. Maintenance Runup Procedures. No procedural changes are necessary for maintenance runups except that a revised runup request form should be implemented for better record-keeping. FAA Action: Approved.	NCP, pages 38–39, Figure 2.4, and Tables 2.2 and 3.1; PBIA Noise Abatement Bulletin; Appendix Volume, Section 1 of Appendix A.2, Section 2.7 of Appendix I.2.
LAND USE ELEMENTS: A combination of strategies in areas within the five year forecast 65 dB LDN contours and neighboring ''buffer zones'' for implementation were identified as being the most appropriate for inclusion in the revised NCP.	
5. Sound Insulation. The ongoing program proposed for the revised NCP will have three main phases: Development of sound insulation program; validation of the sound insulation program; and procedures for program implementation. Modifications may be made based on the technical assistance of the demonstration program. Any modifications will be based on DOT/FAA/PP–92–5 ''Guidelines for the Sound Insulation of Residences Exposed to Aircraft Operations.'' After the DOA assesses the success of the demonstration program and the potential for the development of a large-scale sound insulation program, prospective participants will be notified. The DOA will follow FAA guidelines by encouraging and possibly requiring participating homeowners to grant an avigation easement in exchange for sound insulation modifications. The DOA will enter into a Homeowner Participation Agreement with interested residents and implement the program as funding becomes available. Four non-residential noise sensitive sites within the revised 5-year NEM will also be offered the opportunity to participate. The same guidelines will apply to these non-residential sites. FAA Action: Approved.	NCP, pages 41 and 42, Tables 2.2 and 3.1; and Appendix J.2.
6. Easement Acquisition. The previous Noise Abatement and Mitigation Study (NAMS) recommended the use of avigation easements as a remedial land use strategy. The DOA has, on an on-going basis, acquired avigation easements. However, the easement acquisitions have not been part of a formal program. As a recommended measure of the revised NCP, the easement acquisition program will be implemented on a formal basis. Similar to the sound insulation program, the DOA will enter into an easement acquisition agreement and implement the program as funding becomes available. FAA Action: Approved.	NCP, page 42, Figure 2.5, and Tables 2.2 and 3.1.
7. Transaction Assistance. Transaction assistance was recommended in the previous NCP; however, this measure was never implemented. The measure relates to assurances by the DOA that a homeowner, within the noise exposure area, will receive assistance in the sale of affected structures. In exchange, the homeowner would grant to the DOA an avigation easement. The form of the assistance will be agreed to by the homeowner and the DOA and will be determined for specific structures on an individual basis. Homeowners' participation is voluntary. The DOA will publicize this program and contact homeowners who may be eligible for participation. FAA Action: Approved. This measure is subject to an evaluation at the time of implementation with respect to Airport Improvement Program (AIP) eligibility because some elements of the proposed transaction assistance program may be ineligible for Federal funding.	NCP, page 42, Figure 2.6, and Tables 2.2 and 3.1.

Measure and description	NCP pages
8. Land Acquisition and Relocation. The three previously described remedial land use measures (sound insulation, easement acquisition, and transaction assistance) are the primary remedial measures. If an individual or group of property/home owner(s) and the DOA determine that the implementation of any of the previous remedial measures are inadequate, then land acquisition and relocation will be considered. The DOA will follow all FAA noise land grant provisions for the purchase and disposal of property purchased under this program. FAA Action: Approved.	NCP, pages 45–46, and Tables 2.2 and 3.1.
9. Comprehensive Planning. Local comprehensive plans presently reflect other impacts. Aircraft noise should also be considered. It is recommended that local governments be strongly encouraged to amend their plans through plan amendments. In order to implement this measure successfully, the DOA will coordinate with each jurisdiction as to the timing and content of plan amendments. FAA Action: Approved.	NCP, page 47 and Tables 2.2 and 3.1.
10. Zoning. The previous noise study recommended zoning be addressed through the land development regulations. Draft text amendments have been developed which address the conversion of incompatibly zoned land to compatibly zoned. The DOA is working with the Palm Beach County Planning, Building, and Zoning Departments on strengthening the ordinance. It is a recommendation that the ordinance include: specific reference to the NEMs and the affected areas (including references to the current annual maps within the body of the ordinance), a change in the use regulation table to include a noise/land use compatibility determination, specific prohibition on zoning approval for noise sensitive sites within the designated noise affected areas. FAA Action: Approved.	NCP, page 47, Appendix J.2, and Tables 2.2 and 3.1.
11. Local Environmental Review. A formal local environmental review program should be established, with thresholds or mechanisms to trigger a local environmental review of proposed development if it lies within the environs surrounding PBIA. The following measures are recommended: designation of a governmental/airport liaison staff position to address, among other issues, airport/community development issues; environmental review of new development shall include zoning review, building structure and content, height review using FAR part 77 criteria and local land use regulations, noise/land use compatibility based on FAR part 150 guidelines and, when approved, the Palm Beach County airport land use compatibility zoning ordinance; and formal coordination meetings between the liaison and other local government staff be held on a monthly basis. FAA Action: Approved except for measures pertaining to FAR part 77 height criteria, which is disapproved for purposes of part 150. Part 77 height/hazard zoning is not a noise mitigation measure and is not approvable under part 150. The airport operator is encouraged to incorporate part 77 into its overall environmental review process.	NCP, page 48 and Tables 2.2 and 3.1.
12. Real Estate Disclosure. This measure involves disclosure to a potential property/homeowner of a property's location relative to noise exposure contours of PBIA. A real estate disclosure program addressing the following is recommended: Make the revised NEMs and NCP matters of public record; update the public record of the NEMs and NCP annually; provide all officially listed realtors in Palm Beach County with information detailing noise contours every six months; and include a noise notice in the public record and real estate information. Guidelines of the Florida DOT and Real Estate Code, agents are obligated to inform prospective buyers of any known or potential issues of which they are aware. The burden of notification is shifted from the DOA to the real estate agents. FAA Action: Approved.	NCP, pages 48–49 and Tables 2.2 and 3.1
13. Building Code Revision. This measure references the revision of the local building codes (Southern Standard) to require that proper noise insulating materials are used in new construction or re-development. This measure was recommended in the original NCP and is included as a recommendation of the Revised NCP. The April 1987 PBIA Noise Abatement and Mitigation Study (NAMS) provided detailed information on how the codes should be revised, in section 5 of the document. The information contained in that report is still valid and is reprinted in Appendix J.2. DOT/FAA document PP–92–5, ''Guidelines for the Sound Insulation of Residences Exposed to Aircraft Operations'', will be made available at all local government building departments. FAA Action: Approved.	NCP, page 49, Tables 2.2 and 3.1, Appendix J.2.
14. Easement Acquisition—Undeveloped Land. This measure involves acquisition of avigation easements for undeveloped parcels within and in close proximity to the DNL 65 and DNL 70 noise contours as added protection from noncompatible future development. The DOA, through local government/airport liaison, will identify all undeveloped parcels. Based on the level of success of the other preventive measures, for those parcels that may still be zoned to allow incompatible development, the DOA will contact the property owners regarding the acquisition of an avigation easement from the undeveloped parcel's property rights. FAA Action: Approved. The airport operator intends to purchase an easement to prevent noncompatible development.	NCP, page 49, Figure 2.5, and Tables 2.2 and 3.1.
15. Land Acquisition—Undeveloped Land. In some instances, none of the recommended preventive land use strategies would prevent an undeveloped parcel from being developed incompatibly. In those instances, the DOA may consider acquiring the property. The use of the local environmental review measure [Measure 11 in this Record of Approval] will provide notification to the DOA of such instances. The implementation process will follow the same procedures as those for developed land [Measure 8 in this ROA]. FAA Action: Approved. This measure is subject to an evaluation at the time of implementation that the property is within the DNL 65 dB contour, and to a determination that the undeveloped property either has been zoned incompatibly or is in imminent danger of being developed incompatibly unless it is acquired by the airport operator.	NCP, page 49, Tables 2.2 and 3.1.
IMPLEMENTATION, MONITORING, AND REVIEW ACTIONS:	
16. Noise and Operations Monitoring System. The DOA will acquire and install a noise and operations monitoring system to support implementation, monitoring, and review of other NCP elements. The major components of the system will be flight track monitoring, aircraft performance monitoring, noise monitoring, user interface & database management, meteorological monitoring, audio & tower radio monitoring & recording capabilities, and aircraft & flight identification components. FAA Action: Approved.	NCP, page 50 and Tables 2.2 and 3.1.
17. Prepare Annual L_{dn} Contours. The DOA Noise Office will continue to develop annual L_{dn} contours to meet a PBIA commitment to an ongoing annual review of the noise contours. FAA Action: Approved.	NCP, page 50 and Tables 2.2 and 3.1.
18. Annual Review of Magnetic Headings. It is recommended that the FAA Air Traffic Control Tower, with DOA assistance, review the magnetic headings annually and revise the departure instructions to pilots to reflect changes in the magnetic heading of the airport's runways. FAA Action: Approved.	NCP, page 51 and Tables 2.2 and 3.1.

Measure and description	NCP pages
19. NEM/NCP Review. At a minimum, the NCP should call for updating the NEM at the end of the five year forecast period. If traffic levels either exceed the forecast levels by 15% or drop below the current levels by 15%, the DOA should review the NEM. In addition, should the annual contours show a significant difference between the annual contours and the approved NEM contours, the DOA should consider more in-depth noise analysis and potential revision of the NCP and NEM. A significant change is defined as an area of non-compatible land use within the 65 dB LDN contour where the annual contour exceeds the relevant NEM contour set by 1.5 decibels or greater. When PBIA has a 100 percent Stage 3 airline fleet, it would be appropriate to review the NEM and NCP. FAA Action: Approved.	NCP, page 51 and Tables 2.2 and 3.1.
20. Runway 27R ILS. The DOA is moving ahead with plans to install an Instrument Landing System (ILS) on Runway 27R. This ILS will greatly improve adherence to the preferred arrival track for that runway. This measure was a recommended action of the previous NCP. FAA Action: Approved. This measure was approved in the 1985 NCP. It is noted that the proposed funding source does not include Federal funding (50 percent State and 50 percent DOA).	NCP, page 51 and Tables 2.2 and 3.1.
21. Program Publicity: Pilot Handout. Figure 2.8 presents a draft recommended pilot handout. The pilot handout would provide information on various noise abatement policies, including: detailed description of noise abatement flight paths; requested use of FAA AC 91–53 procedures and Teterboro noise abatement departure procedures; preferential runway use program; and ground runup procedures. The DOA will distribute the bulletin. Copies also would be posted. The ''Teterboro procedure'' is similar to National Business Aircraft Association's (NBAA) departure procedures for aircraft weighing less than 75,000 pounds. The airport operator has stated that: (1) This is an existing NADP that is recommended as a first preference for those pilots who are familiar with the procedure and (2) the NBAA procedure is recommended for other pilots (page 38 of the NCP) and (3) pilots groups have reviewed the procedures (Air Line Pilots Association, Aircraft Owners and Pilots Association, and NBAA) (March 14, 1995, letter from PBIA). FAA Action: Approved. The most current version of the above-referenced FAA AC is 91–53A and should be appropriately referenced. The pilot handout should reflect the voluntary nature of the flight procedures, as indicated under the appropriate sections in this ROA (Measures 1, 2, and 3).	NCP, page 51, Figure 2.8, and Tables 2.2 and 3.1; PBIA Noise Abatement Bulletin; March 14, 1995, letter from PBIA.
22. Revise FAA Tower Order. Changes to the preferential runway use and multiple noise abatement departure flight track assignment elements in the PBIA Noise Compatibility Program will necessitate changes to FAA Order 8400.9. FAA Action: Approved. These procedures have been approved as voluntary measures in this ROA (Measures 2 and 3). The FAA by formal order under 49 U.S.C. 40103 would implement these measures, which would also be subject to applicable environmental requirements prior to implementation.	NCP, page 54, Figure 2.9, and Tables 2.2 and 3.1.
23. Program Publicity: National Publications. There are a number of nationally recognized publications that provide pilots with information on airport operating procedures. The DOA will request that these publications include appropriate summaries of the PBIA noise abatement procedures. FAA Action: Approved.	NCP, page 54 and Tables 2.2 and 3.1.
24. Public Participation: Ongoing Citizens Meetings. The DOA will continue to meet on a routine basis with the CCAN or a similar group to continue promotion of public participation and to review ongoing noise abatement measures and the implementation of the recommendations of this study. FAA Action: Approved.	NCP, page 54 and Tables 2.2 and 3.1.
25. Program Publicity: AIRWAVES Newsletter. The DOA will continue to publish newsletters at regular intervals to update residents and other interested parties of the status of PBIA's noise abatement program. FAA Action: Approved.	NCP, page 54 and Tables 2.2 and 3.1.

These determinations are set forth in detail in a Record of Approval endorsed by the Administrator on May 17, 1995. The Record of Approval, as well as other evaluation materials and the documents comprising the submittal, are available for review at the FAA office listed above and at the administrative offices of Palm Beach County.

Issued in Orlando, Florida on May 23, 1995.

Charles E. Blair,

Manager, Orlando Airports District Office.

[FR Doc. 95–16294 Filed 6–30–95; 8:45 am]

BILLING CODE 4910–13–M

Notice of Intent to Rule on Application To Impose and Use the Revenue From a Passenger Facility Charge (PFC) at the Huntsville International Airport, Huntsville, AL

AGENCY: Federal Aviation Administration (FAA), DOT.

ACTION: Notice of intent to rule on application.

SUMMARY: The FAA proposes to rule and invites public comment on the application to impose and use the revenue from a PFC at the Huntsville International Airport under the provisions of the Aviation Safety and Capacity Expansion Act of 1990 (Title IX of the Omnibus Budget Reconciliation Act of 1990) (Public Law 101–508) and part 158 of the Federal Aviation Regulations (14 CFR part 158).

DATES: Comments must be received on or before August 2, 1995.

ADDRESSES: Comments on this application may be mailed or delivered in triplicate to the FAA at the following address: FAA/Airports District Office, 120 North Hangar Drive, Suite B, Jackson, Mississippi 39208–2306.

In addition, one copy of any comments submitted to the FAA must be mailed or delivered to Mr. Luther H. Roberts, Jr., Director of Finance/Administration, Huntsville-Madison County Airport Authority, at the following address: 1000 Glenn Hearn Blvd, Box 20008, Huntsville, AL 35824.

Air carriers and foreign air carriers may submit copies of written comments previously provided to the Huntsville-Madison County Airport Authority under section 158.23 of part 158.

FOR FURTHER INFORMATION CONTACT: Elton E. Jay, Principal Engineer, FAA Airports District Office, 120 North Hangar Drive. Suite B, Jackson, Mississippi 39208–2306, telephone number 601–965–4628. The application may be reviewed in person at this same location.

SUPPLEMENTARY INFORMATION: The FAA proposes to rule and invites public comment on the application to impose and use the revenue from a PFC at the Huntsville International Airport under the provisions of the Aviation Safety and Capacity Expansion Act of 1990 (Title IX of the Omnibus Budget Reconciliation Act of 1990) (Public Law 101–508) and Part 158 of the Federal Aviation Regulations (14 CFR part 158).

On June 26, 1995, the FAA determined that the application to

impose and use the revenue from a PFC submitted by the Huntsville-Madison County Airport Authority was substantially complete within the requirements of section 158.25 of Part 158. The FAA will approve or disapprove the application, in whole or in part, no later than October 19, 1995.

The following is a brief overview of the application:

Level of the proposed PFC: $3.00

Actual charge effective date: June 1, 1992

Estimated charge expiration date: October 31, 2008

Total estimated net PFC revenue: $19,120,698

Estimated PFC revenues to be used on projects in this application: $16,174

Brief description of proposed project(s): Replace ATCT airfield lighting controls and acquire security vehicle.

Class or classes of air carriers which the FAA has previously approved exemption from the requirement to collect PFCs: Air taxi/commercial operators, certified air carriers, and certified route air carriers having fewer than 500 annual enplanements.

Any person may inspect the application in person at the FAA office listed above under **FOR FURTHER INFORMATION CONTACT**. In addition, any person may, upon request, inspect the application, notice and other documents germane to the application in person at the office of the Huntsville-Madison County Airport Authority.

Issued in Jackson, Mississippi, on June 26, 1995.

Elton E. Jay,

Acting Manager, Airports District Office, Southern Region, Jackson, Mississippi.

[FR Doc. 95–16295 Filed 6–30–95; 8:45 am]

BILLING CODE 4910–13–M

Research and Special Programs Administration

International Standards on the Transport of Dangerous Goods; Public Meeting

AGENCY: Research and Special Programs Administration (RSPA), Department of Transportation.

ACTION: Notice of public meeting.

SUMMARY: This notice is to advise interested persons that RSPA will conduct a public meeting to report on the results of the tenth session of the United Nation's Sub-Committee of Experts on the Transport of Dangerous Goods (UNSCOE), to discuss preparations for the eleventh session of the UNSCOE and to report on progress in harmonizing hazardous materials regulations in North America, with particular emphasis on progress in harmonizing regulations with Mexico.

DATES: July 26, 1995 at 9:30 a.m.

ADDRESSES: Room 6200, Nassif Building, 400 Seventh Street SW., Washington, DC 20590.

FOR FURTHER INFORMATION CONTACT: Frits Wybenga, International Standards Coordinator, Office of Hazardous Materials Safety, Department of Transportation, Washington, DC 20590; (202) 366–0656.

SUPPLEMENTARY INFORMATION: The primary purpose of this meeting will be to (1) review the progress made by the tenth session of the UNSCOE which is being held from July 10–21, 1995 and (2) to begin preparation for the eleventh session of the UNSCOE to be held November 4, through December 15, 1995 in Geneva, Switzerland. Topics to be covered include matters related to explosive including the United Nations (UN) External Fire (Bonfire) Test, restructuring the UN Recommendations on the Transport of Dangerous Goods into a model rule, criteria for environmentally hazardous substances, review of intermodal portable tank requirements, classification of individual substances and requirement for bulk and non-bulk packagings used to transport hazardous materials. This meeting will also provide an opportunity to report on the activities related to the harmonization of hazardous materials regulations in North America, with particular emphasis on progress in harmonizing regulations with Mexico.

The public is invited to attend without prior notification.

Issued in Washington, DC, on June 27, 1995.

Robert A. McGuire,

Deputy Associate Administrator for Hazardous Materials Safety.

[FR Doc. 95–16245 Filed 7–3–95; 8:45 am]

BILLING CODE 4910–60–M

UNITED STATES INFORMATION AGENCY

Meeting of the Advisory Board for Cuba Broadcasting

The Advisory Board for Cuba Broadcasting will conduct a meeting on Thursday, July 6, 1995, at the Doral Resort and Country Club in Miami, Florida. The intended agenda is listed below.

Presidential Advisory Board Meeting, July 6, 1995

Agenda

I. Approval of Minutes
II. Resignation of OCB Director
III. Technical Update
IV. Update on Radio and T.V. Marti
V. The Role and Responsibility of the Office of the Inspector General within USIA
VI. Old Business
  (a) Pending Investigations
  (b) Magnavision Update
VII. New Business
VIII. Public Testimony

Meeting will begin at 9:30 a.m. and will not require a closed portion or session.

Members of the public interested in attending the meeting should contact Ms. Angela R. Washington, at the Advisory Board Office. Ms. Washington can be reached at (202) 401–2178.

Dated: June 22, 1995.

Yvonne F. Soler,

Executive Director, Presidential Advisory Board for Cuba Broadcasting.

[FR Doc. 95–16202 Filed 6–30–95; 8:45 am]

BILLING CODE 8230–01–M

DEPARTMENT OF VETERANS AFFAIRS

Performance Review Board Members

AGENCY: Department of Veterans Affairs.

ACTION: Notice.

SUMMARY: Under the provisions of 5 U.S.C. 4314(c)(4) agencies are required to publish a notice in the **Federal Register** of the appointment of Performance Review Board (PRB) members. This notice revises the list of members of the Department of Veterans Affairs (VA) Performance Review Boards which was published in the **Federal Register** on October 24, 1994 (54 FR 53512).

EFFECTIVE DATE: June 20, 1995.

FOR FURTHER INFORMATION CONTACT: Carol A. Kummer, Office of Human Resources Management (503), Department of Veterans Affairs, 810 Vermont Avenue, NW, Washington, DC 20420, (202) 273–4937.

VA Performance Review Board (PRB)

Eugene A. Brickhouse, Assistant Secretary for Human Resources and Administration (Chairperson)
Raymond H. Avent, Deputy Under Secretary for Benefits
Shirley Carozza, Deputy Assistant Secretary for Budget
Jule D. Moravec, Ph.D., Associate Chief Medical Director for Operations (Alternate)

Harold F. Garcey, Jr., Chief of Staff of the Secretary
Thomas L. Garthwaite, M.D., Deputy Under Secretary for Health
Gerald K. Hinch, Deputy Assistant Secretary for Equal Opportunity
Kathy E. Jurado, Assistant Secretary for Public and Intergovernmental Affairs
Mary Lou Keener, General Counsel
William T. Merriman, Deputy Inspector General
Roger R. Rapp, Director of Field Operations, National Cemetery System
Patricia A. Grysavage, Director, Executive Management and Communications, Veterans Benefits Administration (Alternate)

Veterans Benefits Administration PRB

Raymond H. Avent, Deputy Under Secretary for Benefits (Chairperson)
Celia Dollarhide, Director, Education Service
J. Gary Hickman, Director, Compensation and Pension Service
Stephen L. Lemons, Director, Central Area
Harold F. Gracey, Jr., Chief of Staff, Office of the Secretary
Newell Quinton, Director, Veterans Assistance Service
Leo Wurschmidt, Director, Southern Area

Veterans Health Administration PRB

Thomas L. Garthweite, M.D., Deputy Under Secretary for Health (Chairperson)
Jule D. Moravec, Ph.D., Associate Chief Medical Director for Operations (Co-Chairperson)
Sheila M. Cullen, Acting Regional Director, Western Region
Jim W. Delgado, Director, Voluntary Service
Barbara L. Gallagher, Regional Driector, Eastern Region
Harold F. Gracey, Jr., Chief of Staff, Office of the Secretary
W. Todd Grames, Chief Financial Officer
James L. Green, M.D., Deputy Associate CMD for Rehabilitation and Prosthetics
John R. Higgins, M.D., Regional Director, Southern Region
Thomas B. Horvath, M.D., Director, Mental Health and Behavioral Sciences Service
Michael J. Hughes, Chief of Staff to the Under Secretary for Health
David H. Law, M.D., Acting Associate Deputy CMD for Clinical Programs
Lydia B. Mavridis, Associate CMD for Administration
Robert A. Perreault, Director, Health Care Reform Office
Elizabeth M. Short, M.D., Associate CMD for Academic Affairs
David Whatley, Regional Director, Central Region
Charles V. Yarbrough, Associate CMD for Construction Management

Office of Inspector General PRB

Milton M. MacDonald, Deputy Assistant Inspector General for Auditing, Deputy of State (Chairperson)
David A. Brinkman, Assistant Inspector General for Analysis and Followup, Deputy of Defense
Wilbur Daniels, Assistant Inspector General for Inspections and Evaluations, Department of Transportation

Dated: June 20, 1995.

Jesse Brown,

Secretary of Veterans Affairs.

[FR Doc. 95–16168 Filed 6–30–95; 8:45 am]

BILLING CODE 8320–01–M

Sunshine Act Meetings

Federal Register

Vol. 60, No. 127

Monday, July 3, 1995

This section of the FEDERAL REGISTER contains notices of meetings published under the ''Government in the Sunshine Act'' (Pub. L. 94-409) 5 U.S.C. 552b(e)(3).

FARM CREDIT ADMINISTRATION

Farm Credit Administration Board; Regular Meeting

SUMMARY: Notice is hereby given, pursuant to the Government in the Sunshine Act (5 U.S.C. 552b(e)(3)), that the July 13, 1995 regular meeting of the Farm Credit Administration Board (Board) will not be held and that a special meeting of the Board is scheduled for Wednesday, July 19, 1995 at 2 p.m. An agenda for this meeting will be published at a later date.

FOR FURTHER INFORMATION CONTACT: Floyd Fithian, Secretary to the Farm Credit Administration Board, (703) 883–4025, TDD (703) 83–4444.

ADDRESS: Farm Credit Administration, 1501 Farm Credit Drive, McLean, Virginia 22102–5090.

Dated: June 29, 1995.

Floyd Fithian,

Secretary, Farm Credit Administration Board.

[FR Doc. 95–16372 Filed 6–29–95; 10:31 am]

BILLING CODE 6705–01–P

MORRIS K. UDALL SCHOLARSHIP AND EXCELLENCE IN NATIONAL POLICY FOUNDATION

Notice of Meeting Under the Government in the Sunshine Act

The Board of Trustees of the Morris K. Udall Scholarship and Excellence in National Environmental Policy Foundation will hold a meeting beginning at 4:00 p.m. on Friday, July 28, 1995, at the Renaissance Arlington Hotel, 950 North Stafford Street, Arlington, VA 22203.

The matters to be considered will include: (1) Approval of By-laws for the Foundation; (2) Approval of a proposal to implement the Morris K. Udall Foundation Scholarship Program; and (3) Approval of a conference on the subject of environmental conflict resolution. The meeting is open to the public.

CONTACT PERSON FOR MORE INFORMATION: Christopher L. Helms, 811 East First Street, Tucson, AZ 85719. Telephone: (520) 670–5523.

Dated this 28th day of June, 1995.

Christopher L. Helms,

Executive Director.

[FR Doc. 95–16471 Filed 6–29–95; 3:30 pm]

BILLING CODE 9630–11–M

federal register

Monday
July 3, 1995

Part II

Environmental Protection Agency

40 CFR Parts 9 and 90

Control of Air Pollution; Emission for New Nonroad Spark-ignition Engines At or Below 19 Kilowatts; Final Rule

ENVIRONMENTAL PROTECTION AGENCY

40 CFR Parts 9 and 90

[FRL–5217–6]

RIN 2060–AF78

Control of Air Pollution; Emission Standards for New Nonroad Spark-ignition Engines At or Below 19 Kilowatts

AGENCY: Environmental Protection Agency (EPA).

ACTION: Final rule.

SUMMARY: This action establishes the first phase of regulations to control emissions from new nonroad spark-ignition engines at or below 19 kilowatts (25 horsepower). Regulatory requirements will for the first time control emissions from these engines, which cause or contribute to nonattainment of National Ambient Air Quality Standards for carbon monoxide (CO) and ozone. These engines are used principally in lawn and garden equipment. The new standards are expected to result in a 32 percent reduction in hydrocarbon (HC) emissions and a 7 percent reduction in CO emissions from these engines in the year 2020, when complete fleet turnover is projected. A second phase of regulations addressing emissions from these engines is currently under development.

EFFECTIVE DATE: This rule becomes effective on August 2, 1995. The incorporation by reference of certain publications listed in the regulations is approved by the Director of the Federal Register as of August 2, 1995.

ADDRESSES: Materials relevant to this rulemaking are contained in EPA Air Docket LE–131: Docket No. A–93–25 at the U.S. Environmental Protection Agency, room M–1500, 401 M Street SW., Washington, DC 20460. The docket may be inspected at this location from 8:30 a.m. until 5:30 p.m. weekdays. The docket office also may be reached by telephone: (202) 260–7548 (or fax (202) 260–4400). As provided in 40 CFR part 2, a reasonable fee may be charged by EPA for photocopying.

FOR FURTHER INFORMATION CONTACT: Lisa Snapp, Office of Mobile Sources, Certification Division, (313) 741–7900.

An informational workshop will be held at 10 a.m. on Thursday, August 10, 1995, at the Sheraton Inn, 3200 Boardwalk, Ann Arbor, Michigan; for more information, contact Linda Zirkelbach, Office of Mobile Sources, Certification Division, (313) 668–4567.

SUPPLEMENTARY INFORMATION:

Table of Contents

I. Obtaining Copies of Documents
II. Legal Authority and Background
III. Description of the Action
  A. Overview
  B. General Enforcement Provisions
  C. Program Description
IV. Public Participation
  A. Model Year Definition and Effective Date
  B. Definition of Handheld Equipment, Snowthrowers, and Two-stroke Lawnmowers
  C. Requirements Applicable to Vehicle and Equipment Manufacturers
  D. CO Standard
  E. Labeling
V. Environmental Benefit Assessment
VI. Economic Effects
  A. Industry Cost Impacts
  B. Consumer Cost Impacts
  C. Cost-Effectiveness
VII. Administrative Requirements
  A. Administrative Designation and Regulatory Analysis
  B. Paperwork Reduction Act
  C. Unfunded Mandates Act
  D. Regulatory Flexibility Act

I. Obtaining Copies of Documents

The proposed regulatory language (which was not published with the notice of proposed rulemaking for this rule), the final rulemaking (both preamble and regulatory language), the Regulatory Support Document (RSD), and the Response to Comments (RTC) are available electronically on the Technology Transfer Network (TTN). TTN is an electronic bulletin board system (BBS) operated by EPA's Office of Air Quality Planning and Standards. Users are able to access and download TTN files on their first call. After logging onto TTN BBS, to navigate through the BBS to the files of interest, the user must enter the appropriate command at each of a series of menus. The steps required to access information on this rulemaking are listed below. The service is free, except for the cost of the phone call.

TTN BBS: 919–541–5742 (1,200–14,400 bps, no parity, eight data bits, one stop bit)
Voice help: 919–541–5384;
Internet address: TELNET ttnbbs.rtpnc.epa.gov;
Off-line: Mondays from 8:00–12:00 Noon ET;
1. Technology Transfer Network Top Menu;
<T> GATEWAY TO TTN TECHNICAL AREAS (Bulletin Boards);
Command: T;
2. TTN TECHNICAL INFORMATION AREAS;
<M> OMS—Mobile Sources Information;
Command: M;
3. OMS BBS ==== MAIN MENU;
FILE TRANSFERS;
<K> Rulemaking & Reporting;
Command: K;
4. RULEMAKING PACKAGES;
<6> Non-Road;
Command: 6;
5. Non-Road Rulemaking Area;
File area # 2 . . . Non-Road Engines;
Command: 2<CR>;
6. Non-Road Engines.

At this stage, the system will list all available nonroad engine files. To download a file, select a transfer protocol which will match the terminal software on your own computer, then set your own software to receive the file using that same protocol.

If unfamiliar with handling compressed (that is, ZIP'ed) files, go to the TTN top menu, System Utilities (Command: 1) for information and the necessary program to download in order to unZIP the files of interest after downloading to your computer. After getting the files you want onto your computer, you can quit TTN BBS with the <G>oodbye command.

II. Legal Authority and Background

Authority for the actions set forth in this rule is granted to EPA by sections 202, 203, 204, 205, 206, 207, 208, 209, 213, 215, 216, and 301(a) of the Clean Air Act as amended (''CAA'' or ''Act'') (42 U.S.C. 7521, 7522, 7523, 7524, 7525, 7541, 7542, 7543, 7547, 7549, 7550, and 7601(a)).

On May 16, 1994, the Agency published a Notice of Proposed Rulemaking (NPRM) for this rule.[1] That proposed rule contains substantial information relevant to the matters discussed throughout this final rule. The reader is referred to that document for additional background information and discussion of various issues.

The Nonroad Engine and Vehicle Emission Study[2] (''Nonroad Study'') required by section 213(a)(1) of the Act was completed in November 1991. The Agency was required by section 213(a)(2) of the Act to determine whether emissions of CO, oxides of nitrogen (NO_X), and volatile organic compounds (VOCs) from new and existing nonroad engines, equipment, and vehicles are significant contributors to ozone and CO concentrations in more than one area that has failed to attain the national ambient air quality standards for ozone and CO. This significance determination was finalized

[1] 59 FR 25399 (May 16, 1994).

[2] The Nonroad Study is available in EPA Air Docket #A–91–24. It is also available through the National Technical Information Service, referenced as document PB 92–126960.

on June 17, 1994 (59 FR 31306) and is incorporated by reference into this final rulemaking. In that same **Federal Register** notice, the first set of regulations for a class or category of nonroad engines that cause or contribute to such air pollution, required by section 213(a)(3), was promulgated for new nonroad compression-ignition (CI) engines at or above 37 kilowatts (kW). Today's action continues to implement section 213(a)(3) by establishing emission standards and other requirements for another class or category of nonroad engines that causes or contributes to such air pollution: nonroad spark-ignition (SI) engines at or below 19 kW, hereafter referred to as ''small SI engines.''

These standards reflect the greatest degree of emission reduction achievable through the application of technology that EPA has determined will be available for small SI engines, considering the cost of applying such technology within available lead time and noise, energy, and safety factors associated with such technology.

According to the Nonroad Study, nonroad engines, equipment, and vehicles contribute an average of 10 percent of summer VOCs in the nineteen ozone nonattainment areas included in the study. Small SI engines are the source of half of those nonroad summer VOC emissions. In the sixteen CO nonattainment areas included in the study, nonroad engines, equipment, and vehicles account on average for 9 percent of winter CO emissions. Small SI engines are the source of 56 percent of the nonroad winter CO contribution, according to the study.

The Agency initiated a convening process to determine the best way to work with industry and other interested parties in developing regulations for small SI engines. The conveners interviewed individuals in leadership roles in key organizations to determine what parties were interested in these regulations, what issues were important to interested parties, and whether a consultative rulemaking process would be feasible and appropriate. The convening report recommended an exploratory meeting of interested parties to discuss a consultative process.[3] After two such meetings, it was suggested that EPA consider a two-phased approach to regulation of small SI engines. In the first phase, EPA would propose regulations for new small SI engines through the normal regulatory process rather than a consultative process. The Phase 1 regulations would be similar to the Regulation for 1995 and Later Utility and Lawn and Garden Equipment Engines issued by the California Air Resource Board (CARB), modified as necessary to meet CAA requirements (for example, EPA's proposal could modify CARB's program by including engines preempted from regulation in California). The Phase 1 proposal would be completed as soon as possible, but no later than spring of 1995. The second phase of regulation could be developed through the consultative process of regulatory negotiation, and could include issues such as useful life, in-use emissions, evaporative emissions, refueling emissions, test procedure, and market-based incentive programs. The Phase 2 negotiations were anticipated to begin in Fall 1993 and continue for approximately 18 months. The Agency decided to proceed with this phased approach.

The settlement of *Sierra Club v. Browner*, Civ. No. 93–0197 NHJ (D.D.C. 1993) required EPA to propose emission standards for small SI engines by April 1994 and to promulgate such standards by May 30, 1995. In accordance with the terms of the settlement, the EPA Administrator signed the Phase 1 NPRM on April 29, 1994; the NPRM was published on May 16, 1994 (59 FR 25399).

A public hearing was held on June 21, 1994. The close of the comment period on the NPRM was extended from July 15, 1994, to August 5, 1994.

III. Description of the Action

The general provisions of this rule are briefly described in this section.

A. Overview

This rule initiates federal regulation of emissions of HC, NO_X, and CO from certain new nonroad SI engines that have a gross power output at and below 19 kW.[4] A spark-ignition engine is an internal combustion engine in which the air/fuel mixture is ignited in the combustion chamber by an electric spark.

This rule has the following regulatory scheme:

- Designation of product lines into groups of engines with similar emission characteristics (such groups are called engine families),
- Manufacturer emission testing of selected engines with a specified test procedure to demonstrate compliance with new engine emission standards,
- Labeling of engines, and alternatively, equipment labeling if the engine label becomes obscured when placed in the equipment,
- Submission of an application for certification for each engine family,
- Inclusion of various certification requirements such as the prohibition of defeat devices,
- Issuance of an emission certificate of conformity for each engine family,
- Prohibition against offering for sale in the United States engines not certified by EPA,
- Requirement that equipment manufacturers use the appropriate handheld or nonhandheld certified engine in their equipment,
- Recordkeeping and reporting requirements,
- EPA Administrator testing provisions,
- Design warranty provisions and prohibition on tampering,
- Inclusion of all new farm and construction engines at or below 19 kW, state regulation of which is preempted under the CAA,
- Development of a voluntary engine manufacturer's program to evaluate in-use emission deterioration,
- Requirement that if catalysts are used in an engine family, catalyst durability must be confirmed by means of the evaluation procedure that is specified in this notice,
- Defect reporting and voluntary recall,
- Importation provisions,
- General prohibitions and enforcement provisions, and
- Production line Selective Enforcement Auditing (SEA). Certain elements of EPA's on-highway program are not being promulgated in this Phase 1 rule, including:
- No certification requirement for engine durability demonstration,
- No performance warranty,
- No averaging, banking, and trading program, and
- No useful life determination, in-use standards,[5] nor mandatory recall.

B. General Enforcement Provisions

As authorized in the CAA, EPA will enforce nonroad standards in a manner similar to on-highway standards. Section 213(d) of the Act provides that the standards promulgated under section 213 ''shall be subject to sections [206, 207, 208, and 209], with such modifications of the applicable regulations implementing such sections

[3] A copy of the convening report, dated August 24, 1992, is available in the docket for this rulemaking.

[4] To convert kilowatts to horsepower multiply kW by 1.34 and round to the same number of significant digits. For example, 3.5 kW * 1.34 = 4.7 hP.

[5] However, 40 CFR 90.105 specifies that a useful life period will be promulgated by 1997. In-use standards and enforcement are expected to be included in Phase 2.

as the Administrator deems appropriate, and shall be enforced in the same manner as standards prescribed under section [202].''[6] Section 206 specifies requirements for motor vehicles and motor vehicle engine compliance testing and certification. Section 207 requires manufacturers to warrant compliance by motor vehicles and motor vehicle engines in actual use. Section 208 requires recordkeeping by manufacturers of new motor vehicles or new motor vehicle engines and authorizes EPA to collect information and require reports. Finally, section 209 preempts states or any political subdivisions from enforcing standards relating to control of emissions, certification, inspection, or any other approval relating to the control of emissions of new motor vehicles or new motor vehicle engines, unless specifically authorized to do so by EPA. Section 209 also preempts states or any political subdivision from enforcing any standard or other requirement relating to the control of emissions from new nonroad engines or new nonroad vehicles.

Pursuant to this authority, EPA is in today's action promulgating regulations that require manufacturers of new small SI engines to obtain certification and that subject them to Selective Enforcement Auditing. Any manufacturer of a new small SI engine is responsible for obtaining from the Administrator a certificate of conformity covering any engine introduced into commerce in the United States.

The Agency is also finalizing general enforcement provisions and certain prohibited acts similar to those established for on-highway vehicles under sections 203, 204, 205, and 208 of the CAA. Section 203 specifies prohibited acts; section 204 provides for federal court injunctions of violations of section 203(a); section 205 provides for assessment of civil penalties for violations of section 203; and section 208 provides the Agency with information collection authority. The general enforcement language of section 213(d) provides the Agency's authority for applying sections 203, 204, 205, 206, and 208 of the CAA to new small SI engines and equipment.

As applied to nonroad engines, vehicles, and equipment under section 213(d), Phase 1 prohibited acts include, but are not limited to:

- An engine manufacturer's introduction into commerce of new small SI engines that are not covered by a certificate of conformity issued by EPA,
- The introduction into commerce of new small SI equipment and vehicles that do not incorporate the appropriate nonhandheld or handheld certified nonroad engine,
- Tampering with emission control devices or elements of design installed on or in a small SI engine, and
- Failure to provide information to the Agency if requested.

The Agency is also establishing regulations, under the authority of section 205 of the Act, which set forth the maximum statutory penalties for violating the prohibitions.

The Agency is promulgating general information collection provisions similar to current on-highway provisions under section 208 of the Act which include, but are not limited to, the manufacturer's responsibility to provide information to EPA, perform testing if requested by EPA, and maintain records. In addition, emission system defect reporting regulations require manufacturers to report to EPA specific emission system-related defects that affect a given class or category of engines. Agency enforcement personnel are authorized to gain entry and access to various facilities under section 208 and today's action includes these entry and access provisions.

This rule's information requirements are similar to those set forth in the nonroad large CI rule,[7] but are reduced from the on-highway program requirements.

The Agency is authorized under section 217 of the CAA to establish fees to recover compliance program costs associated with sections 206 and 207. In the future EPA will propose to establish fees for this nonroad compliance program, after determining associated costs of the compliance program.

C. Program Description

This section describes several features of EPA's Phase 1 small SI engine and vehicle and equipment compliance program. Some specific issues related to the program which require in-depth discussion are highlighted in section IV. of this preamble (''Public Participation''); all issues commented upon are addressed in detail in the Response to Comments document, located in the docket. In particular, the Response to Comments document should be consulted for more information dealing with issues that are not discussed under the Public Participation section of this document but that have seen a significant change in EPA position between the NPRM and the final rule (specifically, the selection of the worst-case emitter, the voluntary in-use testing program, the absence of a cap on noise, and the catalyst durability requirements).

1. Applicability

This rule applies to new nonroad SI engines that have a gross power output rated at or below 19 kW and are manufactured during or after the 1997 model year, for use in the United States. The scope of this rule encompasses a broad range of small SI engine applications, including farm and construction equipment, which individual states are preempted from regulating under section 209(e)(1) of the CAA. New engines that are covered by this rule are used in a large and varied assortment of vehicles and equipment including lawnmowers, string trimmers, edgers, chain saws, commercial turf equipment, small construction equipment, and lawn and garden tractors.

2. Scope: Exemptions and Exclusions

Pursuant to section 203(b)(1) of the CAA, the Agency is promulgating exemptions and exclusions from this new small SI engine regulation similar to those existing for on-highway engines and nonroad large CI engines. Nonroad engines used solely for competition or combat are excluded from regulation in accordance with the CAA. Exemptions have been established for purposes of research, investigations, studies, demonstrations, training, or for reasons of national security. Such exemptions may be obtained either categorically, that is without application to the Administrator, or by submitting a written application to the Administrator. Export exemptions and manufacturer-owned engine exemptions will be granted without application. Testing exemptions, display exemptions, and national security exemptions must be obtained by application.

The rule also explicitly limits its coverage such that it does not extend to the small SI engines described below:

(1) Engines used to propel marine vessels, as defined in the General Provisions of the United States Code, 1 U.S.C. 3 (1992); this definition of ''vessel'' includes every description of watercraft or other artificial contrivance used, or capable of being used, as a means of transportation on water[8];

(2) Engines used in underground mining or engines used in underground mining equipment and regulated by the Mining Safety and Health

[6] 42 U.S.C. 7547(d).

[7] 59 FR 31306 (June 17, 1994).

[8] The Agency proposed appropriate methods of regulating emissions from these engines separately; the NPRM was published on November 9, 1994 at 59 FR 55930.

Administration (MSHA) in 30 CFR parts 7, 31, 32, 36, 56, 57, 70, and 75;

(3) Engines used in motorcycles and regulated in 40 CFR part 86, subpart E;

(4) Engines used in aircraft, as that term is defined in 40 CFR 87.1(a);

(5) Engines used in recreational vehicles. Recreational vehicles are defined as engines which have no speed governor and which have a rated speed of greater than or equal to 5,000 revolutions per minute (rpm). Engines used in recreational vehicles, by definition, are not used to propel marine vessels, and they cannot be capable of meeting the criteria to be categorized as a Class III, IV, or V engine under this rule.

3. Model Year and Effective Date

The model year definition employed for the engines covered by this rulemaking is the same as that employed for on-highway certification. A model year includes January 1 of the calendar year for which it is designated, but does not include a January 1 for any other calendar year. The maximum duration of a model year is one calendar year plus 364 days.

This rule is effective with model year 1997. A manufacturer may choose to produce both certified engine families and uncertified engine families during annual production periods that start before September 1, 1996. Annual production periods commencing prior to September 1, 1996 must not exceed twelve months in duration; this limitation is only applicable for the start-up of this program. Engines manufactured in a production period commencing on or after September 1, 1996 must be certified. The sole exception among regulated engines is for Class V engines that are preempted from regulation in the State of California; for these engines, the effective date of the rule is January 1, 1998.

New replacement engines manufactured after the applicable effective date are subject to this rule. The Agency is not establishing a separate effective date for nonroad equipment and vehicle manufacturers. However, as long as they do not stockpile noncertified engines, equipment and vehicle manufacturers may continue to use noncertified engines built prior to the effective date until noncertified engine inventories are used up.

4. Engine Classes

Engine classes are specified both by engine displacement, as measured in cubic centimeters (cc), and by the type of equipment the engine powers—either handheld or nonhandheld. There are five engine classes covered by this rule. Each has a unique set of emission standards. Nonhandheld engine classes are: Class I—engines less than 225 cc in displacement; and Class II—engines greater than or equal to 225 cc in displacement. Engines powering equipment defined as handheld are classified as Class III: engines less than 20 cc in displacement, or Class IV: engines equal to or greater than 20 cc and less than 50 cc in displacement, or Class V: engines equal to or greater than 50 cc in displacement. The emission standards promulgated today are considered Phase 1 new small SI engine standards.

5. Handheld Engine Qualifications

Small SI engines are categorized as either handheld or nonhandheld, depending on the use of the equipment in which the engine is installed. A handheld engine must meet at least one of the following four conditions:

(1) The engine must be used in a piece of equipment that is carried by the operator throughout the performance of the intended function(s).

(2) The engine must be used in a piece of equipment that must operate multipositionally, such as upside-down and/or sideways, to meet its intended function(s).

(3) The engine must be used in a one-person auger for which the combined engine and equipment dry weight is under 20 kilograms (kg).

(4) The engine must be used in a piece of equipment, other than an augur, for which the combined engine and equipment dry weight is under 14 kg, no more than two wheels are present, and at least one of the following attributes is also present:

- The operator must alternately provide support or carry the equipment throughout the performance of its intended function(s).
- The operator must provide support or attitudinal control for the equipment throughout the performance of its intended function(s).
- The engine is used in a hand portable generator or pump.

6. Emission Standards

Under this rule, exhaust emissions from new nonroad small SI engines must not exceed the standards applicable to their engine families based on their engine class, as listed in Table 1.

TABLE 1.—EXHAUST EMISSION STANDARDS

Engine characteristics			Pollutant (gram per kilowatt-hour)			
Class	Application	Displacement (cubic cm)	HC + NO_X	HC	CO	NO_X
I	Nonhandheld	<225	16.1		469	
II	Nonhandheld	≥225	13.4		469	
III	Handheld	<20		295	805	5.36
IV	Handheld	≥20, <50		241	805	5.36
V	Handheld	≥50		161	603	5.36

The Agency is providing exceptions to nonhandheld standards for engines used in two types of nonhandheld equipment. Engines used in two-stroke snowthrowers and engines used in two-stroke lawnmowers are allowed to comply with the handheld standards. In addition, the number of two-stroke lawnmower engines allowed to meet handheld standards is subject to a declining annual production cap; any excess annual production would have to meet nonhandheld standards. Moreover, manufacturers of engines used exclusively in snowthrowers and ice-augers will be required to certify to and comply with only the applicable nonhandheld or handheld CO standard, and will not have to meet the HC standards, either nonhandheld or handheld, unless they opt to certify to those standards. The Agency has decided to finalize the combined HC + NO_X standard for Classes I and II while requiring that the individual test results for HC and NO_X also be submitted, as proposed.

The Agency has not addressed standards for air toxics in this action.

7. Engine Family Categorization

For the purpose of demonstrating emission compliance, EPA is requiring that manufacturers of small SI engines divide their product line into groups of engines, called engine families, which are composed of engines having identical physical characteristics and similar emission characteristics. Small SI engine families are determined by using the same criteria currently used to define on-highway motorcycle engine families.

To be placed in the same engine family, engines are required to be identical in all the following applicable respects:

(1) Combustion cycle;

(2) Cooling mechanism;

(3) The cylinder configuration (inline, vee, opposed bore spacings, and so forth);

(4) The number of cylinders;

(5) The engine class;

(6) The number of catalytic converters (location, volume, and composition), and

(7) The thermal reactor characteristics.

At the manufacturer's option, engines identical in all the above respects could be further divided into different engine families if the Administrator determined that such engines were expected to have different emission characteristics. This determination would be based on a number of features, such as the intake and exhaust valve or port size, the fuel system, exhaust system, and method of air aspiration.

8. Certificate of Conformity, Requirements of Certification

Each manufacturer of a new nonroad small SI engine is responsible for obtaining from the Administrator a certificate of conformity covering any engine introduced into commerce in the United States, before such engine is sold, offered for sale, introduced or delivered for introduction into commerce, or imported into the United States.

Section 203 of the CAA does not prohibit the production of engines, vehicles, or equipment before a certificate of conformity is issued. An engine, a vehicle, or equipment may be covered by the certificate provided:

- The engine conformed in all material respects to the engine described in the application for the certificate of conformity, and
- The engine, vehicle, or equipment was not sold, offered for sale, introduced into commerce, or delivered for introduction into commerce prior to the effective date of the certificate of conformity.

The Agency has established a number of requirements that an engine manufacturer must satisfy prior to granting a certificate of conformity. Engines equipped with adjustable operating parameters must comply with all the applicable emission standards over the full range of operating parameters and adjustments. Use of any device on a nonroad engine which senses operation outside normal emission test conditions and reduces the ability of the emission control system to control the engine's emissions is a prohibited act that is subject to civil penalties.

Use of defeat devices is a prohibited act subject to civil penalties. The Agency reserves the right to require testing of a certification test engine over a modified test procedure if EPA suspects a defeat device is being used by an engine manufacturer on a particular engine.

Finally, EPA is requiring that all engine crankcases be closed to preclude the emissions that occur when a crankcase is vented to the atmosphere. Since most currently produced engines do have closed crankcases, EPA believes this requirement will impact relatively few manufacturers.

9. Certification Procedures—Application Process

Each engine manufacturer must submit an application to EPA requesting a certificate of conformity for each engine family for every model year. The Agency will issue certificates to cover production for a single model year. An application must be submitted every model year even when the engine family does not change from the previous certificate, although representative test data may be reused in the succeeding model year's application.

The test engine(s) representing an engine family must demonstrate that its emissions are less than or equal to each separate emission standard. If the emissions from the test engine are below the applicable standards and all other requirements of the regulation are met (including the information required in 40 CFR part 90), EPA will issue a certificate of conformity for that engine family.

The application must provide EPA with sufficient information to assess the appropriate test results and determine the physical and emission characteristics of the engine family, as well as compliance with the applicable emission standards. It is important that the engine manufacturer succinctly, fully, and accurately submit all pertinent information to EPA and maintain internal records which can be easily accessed if such access is determined to be necessary by EPA.

If changes to an engine family configuration occur after the application is submitted which cause the changed version to be the engine family's worst case emitter, then emission testing of the changed version is required. Additionally, the Administrator may require a manufacturer to conduct testing of a changed version that is not a worst case emitter to demonstrate compliance.

10. Certification Procedures—Testing Overview and Preliminaries

The emission level used to certify an engine family must be equal to the highest emission test level reported for any engine configuration in that family. The engine manufacturer is responsible for selecting and testing one engine from each engine family which is most likely to be that engine family's worst case emitter. The Agency expects that the worst case engine would normally be that engine configuration which has the highest weighted brake-specific fuel consumption over the certification test cycle, but will allow the manufacturer to submit data from another engine if it can support its contention that the alternative engine represents the worst case emitter. The Agency may verify the test results by requiring Administrator testing of this engine, or it may opt to test any available test engine representing other configurations in the engine family if it believes the manufacturer did not make a good faith effort to select the worst case emitter.

Before the manufacturer carries out emission testing, it must perform a number of hours of service accumulation on each test engine over the dynamometer cycle of its choice, based on good engineering practices (for example, an operational cycle representative of typical ''break-in'' of a new production engine in actual use). For each engine family, the manufacturer must determine the number of hours required to stabilize the emissions of the test engine, but this stabilization period cannot exceed twelve hours. The manufacturer must maintain and provide in its application to the Administrator a record of the rationale used both in making the dynamometer cycle selection and in making the service accumulation hours determination.

The manufacturer must conduct emission tests of the selected engine(s) using the test procedure established in 40 CFR part 90. However, this rulemaking does provide for EPA review and approval of special test procedures if the small SI engine is not capable of

being satisfactorily tested under the established test procedures.

The Agency does not require engine manufacturers to maintain any certification test engine after a certificate has been granted; however, the manufacturer may find it useful to do so for future showings to EPA. For example, a manufacturer may use such engines for back-to-back testing when running changes occur and the manufacturer wishes to show that no significant emissions impact has resulted.

11. Certification Procedures—Fuels

For the purposes of Phase 1 nonroad small SI compliance testing, EPA has decided to allow the optional use of Indolene fuel in addition to the Clean Air Act Baseline (CAAB) fuel that was specified in the proposal. (Indolene is the trade name for the fuel specified at 40 CFR 86.113 for most light-duty compliance test procedures, referred to as ''Otto-cycle test fuel'' in the regulations.) Since the CARB regulation allows the use of either Indolene or Phase 2 fuel, a test performed using Indolene could be used to satisfy both federal and CARB requirements for small SI engines. The Agency reserves the right to perform confirmatory testing as well as selective enforcement audits on either CAAB or Indolene, regardless of which fuel the manufacturer chooses for its data submittal.

This rule sets forth no special standards nor test procedures for engines that utilize fuels other than gasoline. These regulations apply regardless of the fuel utilized by a small SI engine, so long as the engine otherwise meets the criteria for coverage under this rule. The Agency will consider whether additional guidance or regulation is appropriate regarding any relevant issues brought to its attention concerning engines that use fuels other than gasoline. The Agency requests that such concerns be relayed to EPA as they arise.

The Agency may revisit the fuel specifications issue in a future small nonroad engine rulemaking, depending upon the standards and technology anticipated to be necessary for compliance.

12. Certification Procedures—Emission Test Procedure for HC, CO, and NO_X

The rule establishes a single test procedure that includes a test cycle for measuring HC, CO, and NO_X. There are three different cycles available: one cycle applies to all Class III, IV, and V engines (Cycle C), while two cycles are permissible for use with Class I and II engines (Cycles A and B).

Cycle B can be used for those Class I and II engine families in which 100 percent of the engines are sold with a governor that maintains engine speed within ± 2 percent of rated speed (the manufacturer-specified maximum power of an engine) under all operating conditions. Cycle B is a six-mode steady state cycle consisting of five power modes at rated speed and one no-load mode at idle speed. For all other Class I and II engines, Cycle A is required. Cycle A is identical to Cycle B, except the five power modes are run at intermediate engine speed (85 percent of rated speed).

The engine manufacturer must use Cycle C for engines falling into Classes III, IV, and V. Cycle C is a two-mode steady state cycle consisting of one power mode (at rated speed) and one no-load mode at idle speed. The test modes for each cycle must be run in a prescribed order.

The methods used to measure the gaseous emissions of HC, CO, and NO_X for all small engines are independent of engine type and test cycle. Manufacturers may sample emissions using either the Raw Gas Method or the Constant Volume Sampling Method. Using either method, each test engine must be stabilized at each mode before emission measurement began. After stabilizing the power output during each mode, the concentration of each pollutant, exhaust volume, and fuel flow is determined. The measured values are weighted and then used to calculate the grams of exhaust pollutant emitted per kilowatt-hour.

13. Confirmatory Testing Options

The Agency's confirmatory testing provisions set forth in this rule allow EPA flexibility in determining when and where engine testing may occur. The Agency may require confirmatory engine testing at any given location, including at a manufacturer's facility, and may also require the manufacturer to make available specified instrumentation and equipment. Any testing conducted at a manufacturer's facility must be scheduled by the manufacturer as promptly as possible. Authorized EPA personnel must be given access to the facilities to observe such testing.

14. Retention of Information; Amendments to the Application

The manufacturer is responsible for retaining certain information applicable to each test engine, along with copies of the submitted applications for individual certificates of conformity. The manufacturer must also submit an amendment to the application or certificate of conformity whenever additional small SI engines are added to an engine family or changes are made to a product line covered by a certificate of conformity. Notification normally would occur prior to either producing such engines or making such changes to a product line.

15. Selective Enforcement Auditing Program

The small SI engine SEA program, authorized by CAA section 213, is an emission compliance program for new production nonroad engines that allows EPA to issue an SEA test order for any engine family for which EPA has issued a certificate of conformity. Failure of an SEA may result in suspension or revocation of the certificate of conformity for that engine family. To have the certificate reinstated subsequent to a suspension, or reissued subsequent to a revocation, the manufacturer must demonstrate by showing passing data that improvements, modifications, or replacements have brought the family into compliance. The manufacturer may challenge EPA's suspension or revocation decision based on application of the sampling plans or the manner in which tests were conducted.

16. No Useful Life Period, In-use Enforcement, or Mandatory In-use Testing Program

The final rule does not determine a small SI engine useful life period or establish an in-use enforcement program. However, as further explained in the Response to Comments document, the Agency is allowing a voluntary in-use testing program modeled on the testing program it proposed in the NPRM. The Agency will not require approval of in-house test programs voluntarily created by manufacturers nor creation of such programs. Instead, the Agency will provide guidance according to the testing program proposed in the NPRM to those manufacturers who choose to conduct a program by which they could test a sample of engines while in-use.

Although EPA has promulgated no in-use emission standards for Phase 1 engines, it anticipates that manufacturers would take appropriate actions to prevent recurrence of in-use noncompliance should it be discovered. Voluntary in-use testing will not be a requirement that needs to be fulfilled under a conditional certificate program. Therefore, the conditional certificate program that was proposed for Phase 1 is not being adopted.

One commenter suggested that a voluntary testing program be developed

in place of a mandatory program to develop meaningful data. EPA agrees that this type of a program is more appropriate for Phase 1 and will allow manufacturers to become familiar with an in-use testing program. Because the Agency has chosen not to promulgate an in-use standard or useful life period within this rule, it has decided that a mandatory in-use testing program conducted by manufacturers is unnecessary at this time.

17. Labeling

The engine manufacturer is responsible for proper labeling of engines from each engine family. Manufacturers must label every engine covered by this rulemaking, but they are not required to supply unique numbers for each engine. The label indicates that the engine can meet the standards appropriate to its class.

The Agency has decided that an engine label that meets the labeling requirements for engines sold in the state of California will be accepted as meeting federal labeling requirements, provided the label states that it meets federal standards.

This action also requires that equipment and vehicle manufacturers apply a supplemental label to the equipment or vehicle if the engine label is obscured.

18. Importation Restrictions

Nonconforming small SI engines, vehicles, and equipment will generally not be permitted to be imported for purposes of resale, except as specifically permitted by this action. This rule provides certain exemptions for various reasons, including repairs and alterations, testing, pre-certification, display, national security, and hardship. In addition, nonconforming small SI engines that are exempted from importation restrictions include engines greater than 20 original production years old, engines used solely in competition, and certain engines proven to be identical, in all material respects, to their corresponding United States certified versions.

Today's action will permit individuals to import on a single occasion up to three nonconforming small SI engines, vehicles, or equipment items for personal use (and not for purposes of resale). After an individual's limit of three, or after the first importation, additional small SI engines, vehicles, or equipment will not be permitted to be imported under this rule unless otherwise provided under another exemption or exclusion.

The Agency has also decided not to establish an independent commercial importers (ICI) program for small SI engines.

19. Defect Reporting and Voluntary Recall

The Agency is adopting the proposed emission defect reporting regulations which require a manufacturer to report emission-related defects that affect a given class or category of small SI engines whenever it identifies the existence of a specific emission-related defect in twenty-five or more engines in a single engine family manufactured in the same model year. However, no report need be filed with EPA if the defect is corrected prior to the sale of the affected engines to the ultimate purchaser.

The Agency requires that individual manufacturers establish voluntary recall programs, when appropriate. It has established limited guidelines for engine manufacturers to follow when undertaking such a program.

20. Emission Defect Warranty Requirements

The emission defect warranty will be provided by engine manufacturers for the first two years of engine use, which is harmonious with the two-year warranty period set forth in California's lawn and garden regulations. The warranty requirements are consistent with emission defect warranty policies developed for on-highway vehicles, located in section 207(a) of the Act. Manufacturers of new nonroad engines must warrant to the ultimate purchaser and each subsequent purchaser that such engine was (1) designed, built, and equipped so as to conform at the time of sale with applicable regulations under section 213 of the Act, and (2) free from defects in materials and workmanship which cause such engine to fail to conform with applicable regulations for its warranty period.

21. Prohibited Acts; Tampering

The Agency is adopting provisions that will prohibit introducing engines into commerce in the United States which are not covered by a certificate of conformity issued by EPA. Additionally it will be a prohibited act to use a regulated but uncertified nonroad engine in nonroad vehicles or equipment. It is also a prohibited act for any person to tamper with any emission-related component or system installed on or in a small SI engine. The Agency has applied the existing policies developed for on-highway tampering to engines included in this rule. (See Office of Enforcement and General Counsel; Mobile Source Enforcement Memorandum No. 1A, June 25, 1974.[9])

Adjustments outside of manufacturer's suggested parameters, installation of replacement parts, or installation of add-on parts might not necessarily be considered to be tampering so long as regulated emissions do not increase and engine durability is not adversely impacted as a result of such adjustments, replacement parts, or add-on parts. For example, a manufacturer may install conversion kits so that engines are capable of utilizing alternative fuels if testing has been conducted according to the procedures specified in subpart E of part 90 to ensure that regulated emissions will not increase as a result of the conversion and use of alternative fuels. A manufacturer is not required to send documentation that emissions do not increase to EPA, but should be able to provide such documentation upon request. EPA's tampering enforcement policy memorandum cited above addresses these issues and should be used as a reference to determine whether they constitute tampering or are allowable under the provisions of this rule.

22. Catalyst Durability

Although EPA has not established full emission control system durability demonstration requirements in the rulemaking, it expects manufacturers to design such systems to be durable; that is, to be effective in realizing emission reduction benefits under normal in-use operating conditions not only when the engines are new, but also during operation in-use, over time. While full emission control system durability demonstration requirements are expected to be included in the Phase 2 regulations for small SI engines, EPA has concerns that certain emission control components, namely catalysts, warrant separate consideration.

Therefore, EPA is adopting durability demonstration requirements for catalysts in this rule. If catalysts are used in an engine family to meet the emission standards of this regulation, the engine manufacturer must affirm that the durability of the catalysts has been confirmed on the basis of the evaluation procedure that is specified in this rulemaking. The requirements adopted by EPA differ in some ways from the proposal (regarding thermal stress testing requirements, exhaust gas composition for testing of three-way catalysts, and deterioration limits) that are discussed in more detail in the Response to Comments.

[9] EPA Air Docket #A–93–25, item II-B–01.

23. No Cap on Noise

While EPA proposed that noise produced by new small SI engines would not be allowed to increase over current levels as a result of the proposed emission standards, it has decided not to promulgate such a requirement. Although EPA continues to believe noise control is important, without standards and test procedures, such a requirement is not enforceable. The Agency expects that the types of modifications to current engine design that will be performed to assure compliance with emission standards will not impact noise levels. However, EPA may regulate engine noise if it becomes aware that noise levels do actually increase subsequent to promulgation of this rulemaking.

24. No Averaging, Banking, and Trading Program

This rule does not extend averaging, banking, and trading, nor any of the elements of such a program, to the certification program for the engines subject to this regulation. Averaging, banking, and trading are being discussed as options for Phase 2.

IV. Public Participation and Comment

The Agency received submissions during the comment period for the NPRM from thirty-three commenters. Copies of all of the written comments submitted to EPA, as well as records of all oral comments received during the comment period, can be obtained from the docket for this rule (see **ADDRESSES**).

This section responds to certain comments received from the public on major issues. The docket also contains a ''Response to Comments'' document that provides a more detailed summary of the comments, including many issues not covered in this preamble because they were minor or less contentious issues, and EPA's rationale for its responses.

A. Model Year Definition and Effective Date

This rule will become effective beginning with the 1997 model year. The Agency proposed an effective date of August 1, 1996 for implementation of this rulemaking. Regarding the definition of model year, EPA requested comment on three options: (1) a model year beginning August 1 and ending July 31 of the succeeding year, (2) a model year like that in the on-highway program, beginning January 2 of one year and ending December 31 of the succeeding year, and (3) a model year like that in the on-highway program, but beginning August 1 and ending July 31 of the second succeeding year.

Several states, associations of state and local air officials, and an environmental association supported an effective date of January 1, 1996. They noted that delayed implementation of this rule decreases the value of a phased approach to small engine regulation by eroding the near-term benefits of a program intended largely to provide near-term benefits. A state, an environmental association, and associations of state and local air officials that are participants in the regulatory negotiation for the second phase of small engine regulation stated that their agreement to participate in the negotiated rulemaking was based partly on a January 1, 1996 effective date for the Phase 1 rulemaking.

Several states and a manufacturer supported the proposed effective date of August 1, 1996. One state argued that manufacturers have had ample notice of the fact that they would be regulated, and that to delay would reward parties that have not devoted resources in good faith to develop cleaner engines. Another state commented that it would have to adopt California's regulation for SI engines under 25 horsepower to get the SIP credits it needs if the federal rule's effective date is delayed.

Several manufacturers and industry associations supported an August 1, 1997 effective date, citing lead time considerations. An association pointed out that the interval between promulgation of the final rule in May 1995 and the effective date of August 1, 1996 would provide only one year of lead time prior to implementation, which it considered to be insufficient for engine manufacturers to retool to achieve emission compliance for implementation of nationwide standards.

Another industry association and a manufacturer commented that an August effective date does not coincide with the production cycle for all engines covered by this rule; many operate on a calendar year basis. That association supported setting an effective date two years after California's regulations become effective (e.g., January 1, 1997) for products that are not preempted in California and an effective date two years after this Phase 1 rule takes effect (e.g., January 1, 1999) for products that are preempted in California. The association cited lead time concerns, particularly in regard to products that are preempted from regulation in California. One manufacturer supported a January 1998 effective date for engines used in products that are preempted from regulation in California, arguing that the additional lead time is critical to prevent disruptions in supply since most attention has been focused on engine development for non-preempted products.

Comments on the definition of model year were received from manufacturers and industry, state and local air officials, and an environmental association. All comments supported the on-highway model year definition.

The Agency has decided upon a model year 1997 effective date and has adopted the on-highway model year definition. The 1997 model year will run from January 2, 1996 to December 31, 1997.

The Agency acknowledges industry's need for sufficient lead time. It also acknowledges the need of states to realize reductions of air pollutant emissions, and to adhere to schedules mandated in the CAA for reasonable further progress toward VOC reductions from 1990 levels and for attainment of the National Ambient Air Quality Standard for ozone. The model year 1997 effective date provides additional lead time for those manufacturers that take advantage of the flexibility allowed by the model year definition; it also allows early introduction of complying products by manufacturers that are in a position to produce complying products earlier in the model year rather than later.

The Agency is allowing additional lead time for Class V engines covered by this rule that are used in farm and construction equipment or vehicles which CAA section 209(e)(1)(A) preempts from state regulation. The effective date for such Class V engines is January 1, 1998.

Under the final rule, the model year includes January 1 of the calendar year for which it is designated and does not include a January 1 of any other calendar year. The maximum duration of a model year is one calendar year plus 364 days. A certificate of conformity is issued for each engine family introduced into commerce for a single model year. The annual production period within a model year for any specific model within an engine family begins either: (1) when such engine is first produced, or (2) on January 2 of the calendar year preceding the year for which the model year is designated, whichever date is later. The annual production period ends either: (1) when the last such engine is produced, or (2) on December 31 of the calendar year for which the model year is named, whichever date is sooner.

Introducing a specific model year engine into commerce prior to or after the model year for which the certificate is issued and in effect is a prohibited act. However, in recognition of the fact

that some manufacturers will be in a position to ship certified engines prior to January 2, 1996, EPA is making an exception for engine families that are certified by EPA prior to January 2, 1996; such engine families may enter commerce prior to January 2, 1996, once a certificate of conformity has been issued. Engines produced after December 31 of the calendar year for which the model year is named are not covered by the certificate of conformity for that model year. A new certificate of conformity demonstrating compliance with applicable standards must be obtained for such engines, even if they are identical to engines built before December 31.

To provide maximum flexibility in the start-up of this program, the Agency is interpreting the Phase 1 model year definition somewhat differently than in the on-highway program. For the 1997 model year only, manufacturers may choose to produce both certified and uncertified engine families during annual production periods that begin prior to September 1, 1996. All engines manufactured during annual production periods that begin on or after September 1, 1996 must be certified. In addition, annual production periods that begin prior to September 1, 1996 may not exceed twelve months in length, to ensure that all engines are certified no later than calendar year 1997. The Agency has determined that flexibility in the interpretation of the model year definition for program start-up is necessary in fairness to manufacturers both to provide additional lead time and to account for the variability in production periods of the small SI engine industry.

For example, a manufacturer of lawnmower engines with an annual production period from July 1996 to June 1997 might choose to certify two-thirds of its engine families by July 1996, with the remainder of its production being uncertified. Normally, the manufacturer must certify all its engines in every annual production period; the enhanced flexibility provided by this special interpretation, which allows the manufacturer to choose when to begin certifying in production periods beginning before September 1, 1996, is for the start-up of this program only.

The lawnmower manufacturer in the example above may call the engine families certified in calendar year 1996 either model year 1996 or model year 1997 engines; the advantage to calling them model year 1997 engines is that they can then be built past December 31, 1996. Similarly, the lawnmower engine families certified in calendar year 1997 may be called model year 1997 or model year 1998 engines, but only model year 1998 engines may be built beyond December 31, 1997.

Another example is a string trimmer engine manufacturer that operates on a January to December production period. The manufacturer may choose to certify any portion of its engine families in January 1996, and must certify all its engine families in January 1997.

The Agency expects that manufacturers will federally certify a substantial number of engine families in calendar year 1996 to take maximum advantage of ''green'' marketing strategies. Most of the engine families covered by this regulation will already have been certified to California standards prior to model year 1997. No data are available for EPA to accurately predict the percentage of small engine families that will be certified in calendar year 1996. For purposes of state implementation plan submittals, EPA is estimating that half will be certified in calendar year 1996.

Under no circumstances should the model year definition be interpreted to allow existing models to ''skip'' annual certification by pulling ahead the production of every other model year. While this situation, to the Agency's knowledge, has not occurred in the past, a practice of producing vehicles or equipment for a two-year period would violate the Congressional intent of annual certification based upon an annual production period. The Agency is not currently setting forth rules for how to determine when abuse has occurred, since this has not been a problem to date. However, the Agency is requiring that engine manufacturers certify annually based on an annual production period.

B. Definition of Handheld Equipment, Snowthrowers, and Two-stroke Lawnmowers

1. Definition and General Provisions

The Agency proposed that small SI engines be categorized as either handheld or nonhandheld, depending on the usage of the equipment in which the engine is installed. To qualify as handheld, it was proposed that the engine be required to meet at least one of three criteria. In summary, the criteria are that the engine must be used in a piece of equipment that is carried by the operator; or that it is operate multipositionally; or that it is used in a two-wheeled piece of equipment having a combined engine and equipment dry weight under 14 kg and also has certain other specific attributes (for the criteria in detail, see section III.C.5. of this preamble, ''Handheld Engine Qualifications'').

Comments on this issue submitted by state and environmental organizations suggested that EPA tighten the definition to further limit the extent of the handheld category and prevent abuse of the classifications, while manufacturers and their organizations suggested loosening the definition to allow the equipment of concern to their group to fall into the handheld category.

The Agency is retaining its handheld equipment definition largely as proposed, with the only changes being the addition of a fourth category for one-person augers under 20 kg and the elimination of the term ''exclusively'' from the category for pumps and generators. Based on an extensive review of product literature, the Agency believes that this revised definition adequately describes those types of equipment that are legitimately handheld while excluding nonhandheld applications.

As described more fully in the preamble to the proposed rule, the necessity for a distinction between handheld and nonhandheld equipment is based in part on the substantial difference between emissions from current four-stroke and two-stroke engines, which is an inherent result of their design differences. Although two-stroke engines have significantly higher emissions, their use is necessary in some applications because they are generally lighter for the same rated power and can be used in any orientation, unlike their four-stroke counterparts. Of course, the Agency is not requiring the use of either two-stroke or four-stroke engines in any particular type of equipment. If technological advances are such that two-stroke engines can meet the nonhandheld standards, manufacturers are free to utilize that technology or any other technology that can meet the standards. The distinction between handheld and nonhandheld equipment is not to specifically limit the use of any type of engine but, rather, to limit emissions as much as is achievable while recognizing the unique needs of handheld applications.

The Agency is sympathetic to comments that it should coordinate its handheld definition with CARB. Nevertheless, it believes that its definition clarifies and expands on the CARB definition in ways important to the federal program. Given the different mandates of the two organizations and the specific air quality problems of the State of California, EPA believes it is not inappropriate for the definitions to be slightly different.

Also, an investigation into the types of equipment each definition would cover reveals that there is a very high degree of overlap. Equipment types considered by the EPA to be handheld include, but are not limited to, string trimmers, hedge clippers, brush cutters, hover mowers, leaf blowers, chain saws, clearing saws, and concrete, masonry, and cutoff saws.[10] These equipment types meet EPA's general definition of handheld equipment, while pumps, generators, snowthrowers,[11] edgers, cultivators, tillers, continuous diggers, and trenchers must be under 14 kg and have no more than two wheels to be considered handheld, and augers must be under 20 kg and be intended for one-person use to be considered handheld.

Some commenters suggested that equipment weighing 14 kg is too heavy to be handheld, but did not suggest an acceptable alternative weight. Others felt it was too light for an upper limit. The Agency agrees that 14 kg is indeed heavy for some uses and some consumers, but also believes that certain pieces of equipment at that weight would be used in a handheld manner (such as lightweight edgers and tillers). It is likely that market forces would limit the manufacture and sale of ''handheld'' equipment that is too heavy for the typical consumer of such products. Indeed, a review of product literature indicates that 14 kg appears to be the break point that the market has chosen between equipment types powered with two-stroke engines and those powered by four-stroke.[12] [13]

Additionally, for products not falling into the general handheld definition (that is, products not carried throughout use and not used multipositionally), a product weight of less than 14 kg is not sufficient to qualify as handheld. Such products are also limited to no more than two wheels and must need some degree of operator carrying, support or attitudinal control in order to qualify as handheld; that is, they must not be completely ground-supported. The Agency believes that these additional constraints will prevent true nonhandheld equipment from inadvertently falling into the handheld category.

On the other hand, the mere fact of some degree of ground support should not disqualify a piece of equipment from the handheld category. Some lightweight products requiring some level of ground support, including products with one or two wheels, would typically be considered handheld by the general public. Equipment such as lightweight snowthrowers, tillers and edgers with up to two wheels would require some carrying, support or attitudinal control; lawnmowers and three- and four-wheeled edgers, conversely, would be completely ground-supported and thus not handheld.[14]

Some commenters stated that pumps and generators under 14 kg should not qualify as handheld. The categorization was intended primarily for small pumps and generators that would be transported into remote areas, and is hereby retained. The State of California has a special provision allowing such equipment with non-certified engines to be purchased by emergency response organizations. The Agency is taking a somewhat different route toward a similar end, while making these pieces of equipment more widely available but subject to the handheld standards.

The Agency wishes to clarify that all pumps and generators under 14 kg with no more than two wheels will be categorized as handheld equipment. The phrase ''the engine is used exclusively in a generator or pump'' was not meant to preclude handheld status for pumps and generators with engine models that are also used in other pieces of handheld equipment. The Agency agrees that the term ''exclusively'' in the handheld definition is superfluous and it has been removed.

For this rule, only earth and ice augers that are under 20 kg (including a bit of typical size for that model) and are sold for use primarily by one person will be considered handheld.[15] Two person augers, and any auger of 20 kg or more (including the bit) must meet the nonhandheld standards. The Agency believes that this slight broadening of the definition reasonably responds to the needs of auger manufacturers to provide both a lightweight and a high-strength, high-power product during the time frame of the Phase 1 regulations. Light weight is important for one person to be able to counter the torque generated by the drilling operation, hold the auger vertically, lift it from the hole, and carry it to and from the drilling location. Also, in contrast to truly nonhandheld equipment, augers have no frame or wheels and, thus, require continuous operator support during use. In contrast to other equipment that is clearly handheld, however, augers are of a heavier construction to withstand greater forces during use, and are used for very short bursts of time, so that the 14 kg weight limitation is not applicable. A review of product literature and manufacturer comments indicate that an upper limit of 20 kg would include most or all one-person augers currently on the market.

Auger manufacturers are predominantly small companies and, therefore, are somewhat constrained in their ability to quickly re-engineer their product, acquire a new engine source, and absorb the costs of a four-stroke engine. It is for this reason, coupled with the technological reasons cited above, that the Agency is allowing one-person augers under 20 kg to meet the handheld definition for this Phase 1 regulation of small SI engines. However, this definition will not necessarily be carried into future regulation of small SI engines, such as in the Phase 2 negotiated rulemaking activities currently underway.

2. Snowthrowers

The Agency proposed that snowthrowers meeting the handheld definition be considered handheld equipment; all other snowthrowers would be considered nonhandheld. In general, industry either opposed regulating snowthrowers for HC emissions or favored relaxed emission standards for two-stroke snowthrowers, while environmental and state and local air officials' associations favored more stringent standards.

One industry commenter argued that EPA should at a minimum exempt snowthrowers from the hydrocarbon standards, since emissions from snowthrowers do not demonstrably contribute to summertime ozone

[10] The Agency is aware that concrete/masonry/cutoff saws are sometimes attached to carts for extended or heavy-duty cuts. This occasional use does not negate their overall status as handheld equipment. The Agency agrees with the comment that such saws are often used multipositionally, and thus fall into the general handheld category. Thus, the 14 kg weight limit does not apply. The same is true for hover mowers.

[11] Certain snowthrowers that do not meet the handheld definition are nevertheless allowed to meet the handheld, rather than nonhandheld, CO standards. Engines used exclusively in snowthrowers will not be required to meet the HC standards, either handheld or nonhandheld, unless manufacturers of these engines opt to certify to those standards. See below for further discussion.

[12] For augers, this break point is 20 kg.

[13] See note to docket summarizing product weights, dated 2/17/95, by Lisa Snapp, U. S. Environmental Protection Agency. (EPA Air Docket #A–93–25.)

[14] Additionally, the use of lawnmowers and, similarly, three- and four-wheeled edgers on hillsides is not considered to be multipositional use and, hence, they do not qualify as handheld equipment. Nevertheless, certain lawnmowers are allowed to meet the handheld, rather than nonhandheld, standards. See below for further discussion.

[15] All ice augers, whether or not they qualify as handheld, will not be required to meet the HC standards, unless manufacturers of engines used in those products certify to the HC standards. Under today's rule, ice augers will only be subject to the applicable handheld or nonhandheld CO standard. See below for further discussion.

nonattainment concentrations. According to the commenter, Phase I accomplishes no demonstrable purpose by regulating snowthrower hydrocarbon emissions, as snowthrowers are used exclusively during the winter and reductions achieved by regulating snowthrowers would have no benefit for areas seeking reductions in order to attain the ozone NAAQS during the high ozone season.

Industry commented that there are no snowthrowers with SI engines that weigh under 14 kg. As a result, all snowthrowers covered by the proposal would be subject to nonhandheld standards. According to industry, if snowthrowers with two-stroke engines must comply with nonhandheld standards, EPA would effectively be banning such equipment and placing an unreasonable hardship on that segment of industry. The Nonroad Study indicates that 26 percent of snowthrowers have two-stroke engines.

Industry offered three main lines of reasoning for the position that all two-stroke snowthrowers should be considered handheld. First, snowthrower manufacturers assumed that Phase 1 standards would mirror CARB's standards, including its special exceptions. Second, snowthrowers do not contribute to summer ozone nonattainment. Third, two-stroke snowthrowers have design, performance, and operational characteristics that fill a unique market niche, and have many of the attributes of handheld equipment.

The unique design, performance, and operational characteristics cited by industry include size, weight, maneuverability, and ease of storage and transport. Two-stroke snowthrowers have only two wheels (neither of which touch the ground during operation), and operators must provide continual support and attitudinal control by raising and tilting the equipment in order for it to perform.

Industry commenters noted that two-stroke snowthrowers use a 5.4 kg (12 pound) engine and a single belt-drive system, eliminating the weight of additional belts and pulleys. Moreover, almost all two-stroke snowthrowers are ''single-stage,'' according to industry comments, meaning that they use an auger to gather snow and expel it from a single chamber. By contrast, almost all four-stroke snowthrowers are two-stage units that use an auger to gather snow into one chamber and a separate impeller to discharge it from a second chamber, according to comments. The engines in four-stroke snowthrowers weigh between 11 kg (25 pounds) and 27 kg (60 pounds). According to information submitted by industry, the overall weights of two-stroke snowthrowers range from 16.3 kg (36 pounds) to 39.9 kg (88 pounds); the average weight of the two-stroke models listed was 29.5 kg (65 pounds). In EPA's opinion, a product line ranging in weight from 16.3 to 39.9 kg cannot fairly be considered light in weight, or specifically designed to be lifted or carried, and EPA is not inclined to raise the weight limit in the handheld definition to 30 kg to accommodate such equipment.

Environmental and state and local air officials' associations opposed handheld status for two-stroke snowthrowers. They expressed concern about the high levels of unburned air toxics emitted by two-stroke engines, given operator proximity. The associations pointed out that for larger snowthrowers, four-stroke models are available, and for the small two-wheeled version, electric models are available.

Since EPA agreed to undertake a phased approach to small engine regulation in March 1993 (see 59 FR 25399 at 25400–25401 for a detailed explanation), EPA has maintained that its Phase 1 program would be compatible with CARB's and incorporate compatible emission standards, where it is appropriate to do so in a nationally, rather than regionally, applicable regulation.

After considering the comments, the Agency has concluded that the HC standard will be optional for snowthrowers. This is because, as is discussed in the preamble to the proposed rule (see 59 FR at 25416) and by industry comments, snowthrowers are operated only in the winter, which means that they do not measurably impact ozone nonattainment concentrations and thus need not be subject to stringent control requirements aimed at controlling ozone nonattainment. On a national level, ozone nonattainment is primarily a seasonal problem that occurs during warm sunny weather. Regulating HC and emissions from products used exclusively in the winter, such as snowthrowers, will not advance the Agency's mission to correct this seasonal problem. EPA recognizes that California will be regulating HC emissions from snowthrowers, and today's decision should in no way prejudice California's efforts. The Agency notes that California faces a uniquely difficult problem in that its ozone nonattainment season is year round, and that Congress has recognized California's potential need to adopt measures that are more stringent than those that apply in the nation as a whole. EPA, instead, must promulgate regulations that apply nationally in scope and that address the air quality problems that face the nation generally.

Under today's rule, while manufacturers of snowthrowers will still be required to certify to and comply with applicable CO standards, they will be required to certify to the HC standard only where they opt to become subject to those standards. The Agency expects that many snowthrowers will in fact be certified to meet the HC standards, since the technology necessary to meet those standards will be readily available to snowthrower manufacturers and since manufacturers may wish to be able to take advantage of ''green marketing'' opportunities. However, the Agency does not believe it is appropriate at this time to absolutely require all snowthrowers to be certified to meet a standard that is meant to address ambient air quality problems that do not exist when when these products are in use. This decision in no way affects snowthrower manufacturer responsibilities with respect to the CO standards. Moreover, if an engine manufacturer produces an engine that is used in snowthrowers and in other products that are not used exclusively in the winter, that engine must be certified to the applicable HC standard. Finally, today's decision applies only with respect to regulating snowthrowers under this Phase I rule, and does not prejudge how the Agency will approach this issue in Phase 2.

The Agency is persuaded by comments describing the design, performance, and operational characteristics of two-stroke snowthrowers that two-stroke snowthrowers form a distinct product class from four-stroke snowthrowers. As two-stroke snowthrowers are a distinct product class that depends on a relatively lighter-weight product, EPA does not consider four-stroke technology to be generally available technology for the more light-weight two-stroke snowthrowers.

The Agency shares the concerns raised by commenters about operator proximity to high levels of unburned air toxics emitted by two-stroke engines in a regulatory manner. However, EPA lacks sufficient data to address those concerns at this time.

The Agency agrees with comments that two-stroke snowthrowers would meet the third prong of the handheld definition but for the weight criterion. Rather than amend the weight criterion in the handheld definition to include two-stroke snowthrowers, however, EPA is providing an exception to nonhandheld standards that will require

two-stroke snowthrowers to comply with handheld standards. The exception is based on the distinction between two- and four-stroke snowthrowers as product classes. This result is consistent with CARB.

3. Lawnmowers

Under EPA's proposal, all lawnmowers would be classified as nonhandheld equipment. The Agency requested comment on four options for providing relief for two-stroke lawnmower engine manufacturers.

Two industry manufacturer associations, a dealer association, and one manufacturer recommended that EPA allow two-stroke lawnmower engine manufacturers to meet handheld standards. They commented that two-stroke lawnmower engines would effectively be eliminated from the market under the proposal.

The manufacturer that commented would be particularly impacted by the requirement that lawnmower engines meet nonhandheld standards because it is the largest producer of two-stroke lawnmower engines. It argued that the definition of handheld and nonhandheld should not be used to discriminate against engines according to their application, to bypass the requirement of technological feasibility, to distort the competitive balance of the industry by banning major products, nor to place disproportionate burdens on one company as the price of maintaining an important product line.

A state commented that it sees no reason to grant special concessions to some manufacturers because their current product line uses a more polluting technology than their competitors; such a policy would penalize those manufacturers that have pursued cleaner technologies, according to this comment. Complying four-stroke engines are available and a sufficient number of manufacturers participate in the market to ensure competition, this comment stated.

Environmental and state and local air officials' associations expressed strong opposition to the options for relief for two-stroke lawnmowers; given that approximately 90 percent of lawnmowers sold in the United States already rely on four-stroke technology,[16] it can not be argued that four-stroke engines are not available technology for all lawnmowers, according to these groups.

Environmental and state and local air officials' associations commented that manufacturers have had ample opportunity to react to requirements that might reasonably have been expected. These manufacturers participated in the process that led to the December 1990 adoption of CARB's standards and have already enjoyed a four year period in which to take appropriate action. Those associations also commented that such regulatory relief would compromise the effectiveness of Phase 1, and thereby undermine their acceptance of the phased approach to regulation of small engines.

The Agency is promulgating its proposal that lawnmowers be classified as nonhandheld equipment. However, in response to the industry comments, EPA is providing an exception to the nonhandheld standard to allow two-stroke lawnmower engine manufacturers to produce a declining percentage of two-stroke lawnmower engines that meet handheld standards until model year 2003. This relief for two-stroke lawnmower engine manufacturers is justified by the economic hardship to current manufacturers of two-stroke lawnmowers that would result if two-stroke lawnmowers were required to meet nonhandheld standards upon the effective date of Phase 1, and by the need for additional lead time for current manufacturers of two-stroke lawnmowers to develop mowers that meet nonhandheld standards; EPA has concluded that handheld standards are the most stringent standards achievable for lawnmowers currently using two-stroke engines in the near term given these economic hardship and lead time considerations.

Economic hardship that would result if two-stroke lawnmowers were required to meet nonhandheld standards is documented in two sets of comments from an engine and equipment manufacturer. It stated that it would be forced to close a manufacturing plant that employs 230 people unless some form of relief from the requirement that all lawnmowers comply with nonhandheld standards is granted. The plant is devoted to two-stroke engine operations, according to the comments. The manufacturer commented that the declining production option would avoid closure of the plant and maintain a minimally necessary market presence for its two-stroke lawnmowers during Phase 1. The manufacturer stated that its principal goal and long-term strategy is to develop technology that will enable two-stroke lawnmower engines to meet Phase 2 nonhandheld standards. Reducing sales below 50 percent would destroy the market for the product before Phase 2 technology could be implemented, and reduce plant utilization to unacceptable levels, according to the manufacturer.

The need for additional lead time was a common theme among industry commenters, although only one two-stroke mower engine manufacturer addressed the difficulty, if not impossibility, of two-stroke mowers meeting nonhandheld standards by the effective date of Phase 1. According to this manufacturer, it is not technologically feasible for two-stroke engines to meet nonhandheld standards at this time. The manufacturer argued in its comments that more engineering effort is required for two-stroke lawnmower engines to meet handheld standards than for four-stroke engines to meet nonhandheld standards. It said that this is partly due to the difference in duty cycles for handheld and nonhandheld engines, with handheld engines having the advantage of a higher horsepower divisor than is obtained under the variable nonhandheld load specifications. The manufacturer stated that it is an engineering uncertainty whether and how valve-control techniques developed in the past, to enhance power output for smaller two-stroke engines used in products such as chain saws, might be used to reduce emissions in lawnmowers. Finally, the manufacturer claimed that while it is conceivable that its technology development could permit the introduction of engines meeting the Phase 1 nonhandheld standards during Phase 1, the prospect of this occurring before the year 2001 is remote.

CAA section 213(a)(3) specifies that nonroad emission standards must achieve the greatest degree of emission reduction achievable through the application of technology that the Administrator determines will be available, giving appropriate consideration to cost, lead time, noise, energy and safety. Taking into account the economic hardship and lead time considerations discussed above, EPA has determined that handheld standards subject to a declining production cap are the most stringent emission standards achievable for lawnmowers that currently use two-stroke engines.

Under the declining production cap, two-stroke lawnmower engine manufacturers that wish to continue producing two-stroke lawnmower engines must establish a production baseline. The production baseline is the highest number of two-stroke

[16] See Table 2–03, ''Inventory A & B National Population Estimates'' from the Nonroad Engine and Vehicle Emission Study (Report USEPA Office of Air and Radiation document #21A–2001, November 1991). The Nonroad Study is available in EPA Air Docket #A–91–24. It is also available through the National Technical Information Service, referenced as document PB 92–126960.

lawnmower engines produced in a single annual production period from 1992 through 1994. Documentation verifying the production baseline must be submitted to EPA with the application for certification. In model year 1997, two-stroke lawnmower engine manufacturers may produce 100 percent of their production baseline, which must be certified to handheld standards. In model year 1998, two-stroke lawnmower engine manufacturers may produce 75 percent of their production baseline. From model year 1999 until model year 2003, two-stroke lawnmower engine manufacturers may produce 50 percent of their production baseline in each annual production period. In model year 2003, two-stroke lawnmower engine manufacturers must meet either Phase 1 nonhandheld standards or Phase 2 nonhandheld standards, whichever are applicable.

Although EPA's approach is not consistent with CARB regulations, which require all lawnmowers to meet nonhandheld standards with no exceptions, EPA believes there are two valid reasons for the distinction. First, Congress has recognized the need for California to maintain its own mobile source emission control program (see section 209 of the CAA) because it faces difficult and distinct air pollution problems and, as a result, may need to adopt measures more stringent than those that apply in the nation as a whole. Second, EPA's nonroad emission standards are not allowed to be more stringent than is achievable after consideration of cost and lead time according to section 213(a)(3) of the CAA. Although California is constrained by similar criteria per the authorization criteria of section 209(e), consideration of such criteria is limited to the State of California. The Agency must consider cost and lead time when nonroad emission regulations affect the nation as a whole. The Agency has concluded that in order for it to meet the section 213(a)(3) requirements to consider cost and lead time in setting its nationally applicable standard, EPA must provide for this limited relief for manufacturers of lawnmowers that use two-stroke engines. This conclusion in no way prejudges whether California should grant similar relief.

In contrast to the its treatment of two-stroke versus four-stroke snowthrowers, EPA is not distinguishing two-stroke and four-stroke lawnmowers as separate products, but rather is recognizing the technological infeasibility of two-stroke engines used in lawnmowers meeting the nonhandheld standard by the effective date. The Agency agrees with commenters that four-stroke technology is generally available for lawnmowers, and that two-stroke engines are more polluting than four-stroke engines.

Still, although four-stroke technology is theoretically available for all lawnmowers, it is not immediately available for manufacturers of two-stroke lawnmower engines. Due to the cost and lead time concerns outlined above, EPA is providing a reasonable opportunity for two-stroke lawnmower engine manufacturers to come into compliance with nonhandheld standards.

4. Ice Augers

Under EPA's proposal, all earth and ice augers would have been subject to the applicable handheld or nonhandheld CO and HC standards. In the preamble to the proposed rule, in discussing snowthrowers, EPA noted that the exclusively wintertime use of snowthrowers argues against regulating emissions of HC from those products. In today's rule, EPA is in fact exempting snowthrowers from the requirement to certify to and comply with the HC standard, due to the fact that they do not demonstrably contribute to ozone nonattainment concentrations. For the same reasons, today's rule exempts ice augers from the requirement to certify to and comply with HC standards, while still requiring them to meet the applicable CO standard. Like snowthrowers, ice augers are clearly used only during the winter, and the Agency does not believe it would be reasonable to subject them to stringent control requirements aimed at addressing summertime ozone nonattainment problems. At their option, ice auger manufacturers will be able to certify to HC standards, if they find that complying technology is available and wish to take advantage of ''green marketing'' opportunities. This relief, however, is provided only for ice augers. Earth augers, since they are in fact used during the ozone nonattainment season, will be required to certify to applicable HC standards. Moreover, if a manufacturer produces an engine that is used in ice augers and other products that are not used exclusively in the winter, that engine must be certified to meet the applicable HC standard. Finally, today's decision applies only with respect to regulating ice augers under this Phase I rule, and does not prejudge how the Agency will approach this issue in Phase 2.

C. Requirements Applicable to Vehicle and Equipment Manufacturers

1. Requirement To Use Certified Engines

The Agency proposed that vehicle and equipment manufacturers using small nonroad engines must use appropriate handheld or nonhandheld certified engines, and prohibited the introduction into commerce of nonroad vehicles and equipment lacking appropriate certified engines after the effective date. The Agency received comments both supporting and questioning its authority to require the use of certified engines. One industry association commented that EPA has no authority to require the use of certified engines. A manufacturer and an industry association commented that EPA's authority under CAA section 213 does not extend to equipment. A state, an association of state and local air officials, and an environmental association supported the requirement that equipment manufacturers use complying engines.

Several industry associations commented that the prohibition on introducing into commerce vehicles and equipment lacking appropriate certified engines after the effective date could impose a substantial hardship on industry and is unnecessary to prevent stockpiling. According to their comments, equipment manufacturers now minimize the period they store engines to avoid the substantial costs associated with financing and warehousing inventoried engines. Two associations asked EPA to clarify that neither equipment manufacturers nor dealers have any special obligation to convert their inventories to use certified engines.

The Agency is finalizing the requirement that nonroad vehicle and equipment manufacturers use appropriate handheld or nonhandheld certified engines, effective with the 1997 model year. In EPA's view, the most effective way to ensure that certified engines are used in nonroad vehicles and equipment is to require such engines to be used. CAA sections 213, 216, and 301 provide authority for this requirement, since EPA is required to establish standards that apply to nonroad engines and the vehicles and equipment in which they are used.

2. Separate Effective Date

The Agency requested comment on a separate effective date for vehicle and equipment manufacturers, due to concern about inventories of noncertified engines that could not be incorporated into vehicles or equipment

by the effective date. Most comments did not support a separate effective date.

The Agency is not establishing a separate effective date for nonroad vehicle or equipment manufacturers. The Agency recognizes that certified engines are not likely to be available in the numbers needed by nonroad vehicle and equipment manufacturers on the effective date, and that these manufacturers will continue to use noncertified engines built prior to the effective date until noncertified engine inventories are used up and certified engines are available. As long as vehicle and equipment manufacturers do not inventory engines outside of normal business practices (that is, as long as they do not stockpile noncertified engines), they will be considered to be in compliance. The Agency is adding language to 40 CFR 90.1003(b)(4) to this effect. Neither vehicle and equipment manufacturers nor dealers have any obligation under this regulation to convert their inventories to products with certified engines.

D. CO Standard

An association of engine manufacturers requested an increase in the CO emission standard for Class I and II engines from the proposed level of 402 g/kW-hr to 469 g/kW-hr. In summary, it requested that the standard be raised so that industry can provide consumers, original equipment manufacturers, and commercial and industrial users with a more complete selection of engines (specifically mass market engines—the largest market for small engines) that can meet the Phase 1 HC + NO_X limits and perform acceptably under nearly all operating conditions.[17]

The Agency had to decide whether or not to grant this request based on its assessment of the technological feasibility of providing an adequate supply of Class I and II engines that could comply with the proposed 402 g/kW-hr CO level for the entire nation. Based on the information submitted, which is available in the docket for this rulemaking, the Agency has decided that 469 g/kW-hr is the lowest achievable CO standard for Classes I and II, given cost and lead time constraints, and has set the standard accordingly.

An association of equipment manufacturers argued that 402 g/kW-hr is too stringent for Class V engines and suggested that 603 g/kW-hr would be a more appropriate standard. The Agency requested and received further data and information to establish the appropriate limit for these engines. Additionally, an EPA-performed benefits analysis showed that the CO emission contribution in 2020 from Class V engines complying with a 603 g/kW-hr standard would decrease the benefits of this rule by only 0.7 percent when compared with the proposed standard of 402 g/kW-hr. The environmental impact of this change is low due to the small number of engines in this category.

Based on the technological feasibility information submitted and the small benefits impact, EPA has concluded that the proposed 402 g/kW-hr standard is not achievable for Phase 1 Class V engines. The Agency has therefore decided to raise the CO standard for Class V engines from the proposed 402 g/kW-hr to 603 g/kW-hr, which EPA believes is the most stringent standard achievable for Phase 1 Class V engines. Most, if not all, Class V engines are preempted from state regulation as farm and construction equipment. Therefore, compatibility with CARB is not of such importance for this engine class. However, this position on Class V CO standards is applicable only to Phase 1 and remains to be determined in upcoming Phase 2 regulations.

E. Labeling

The Agency received several comments on its proposed labeling requirements. After considering the comments, EPA has decided to provide equipment manufacturers with some additional flexibility requested by commenters regarding compatibility with CARB's labeling requirements. To reduce manufacturer burden and increase consistency with CARB's requirements, EPA will accept a label that has been approved by CARB and that contains language indicating federal standards have also been met. The Agency will accept any of the following: (1) A label for 50-state engine families having language compatible with both CARB and EPA requirements, (2) a CARB label with additional language to meet federal requirements for the 49-state label, and (3) the EPA label.

The Agency will retain the provision described in the NPRM that requires equipment and vehicle manufacturers to apply a supplemental label if the original engine label is obscured. This provision is consistent with CARB's approach, and ensures that owners, dealers, and repair personnel will have access to necessary engine information without disassembling the original vehicle or equipment.

In addition, EPA has dropped the unique engine identification number requirement. Based on information supplied by engine manufacturers and their associations, EPA has determined that the information to be gained by requiring the unique number did not justify the additional capital and administrative costs to the manufacturers. Because no useful life time period or in-use standard is being established, the Agency has decided to allow in-use testing and recall on a voluntary basis for Phase 1 and, as a result, there is no need for EPA to require the unique engine identification number.

V. Environmental Benefit Assessment

The Agency has determined that the standards set in this rule will reduce emissions of HC and CO and, despite attendant increased emissions of NO_X, will help most areas come into compliance with the National Ambient Air Quality Standards for ozone and, to a lesser extent, CO. Table 2 provides a summary of the annual nationwide emission impacts expected from this rule, beginning with the first full year of implementation.[18] Percentage reductions shown are as compared to the projected levels from small SI engines if this rule were not put into place. Note that annual emission reductions increase greatly in the first few years of the program and level off as fleet turnover is achieved; complete turnover is projected by the year 2020. The underlying analysis and complete table of emission reductions are provided in the Regulatory Support Document (RSD), a copy of which is in the public docket for this rulemaking.

[17] The association states that engine manufacturers have been working for several years to develop products that will meet the Phase 1 standards. Improvements in engine design have been made sufficient to comply with the HC+NO_X standard, but not meet the 402 g/kW-hr CO standard.

[18] These figures are based on the assumption that manufacturers of engines used in snowthrowers and ice augers will opt to certify such engines to meet the applicable HC standards. To the extent that this does not occur, estimated annual HC reductions, and estimated annual NO_X increases, would be reduced.

TABLE 2.—ENVIRONMENTAL IMPACT

Year	Annual HC reduction		Annual CO reduction		Annual NO_X increase	
	Tons	Percent	Tons	Percent	Tons	Percent
1997	102,800	13.1	244,600	2.7	11,000	67.5
2000	221,600	26.9	538,700	5.5	23,900	137.6
2003	262,700	30.5	651,400	6.3	27,800	150.7
2020	339,000	32.4	865,200	6.7	36,300	154.4

VI. Economic Effects

The total national average annual cost of this rule is estimated to be approximately $70 million. If catalysts become necessary, the average annual cost is estimated to be approximately $87 million. The net present value of pollution control capital costs is estimated by EPA to be approximately $28 million. Energy impacts are expected to be positive, freeing up approximately $8 million for other uses in the economy.

The following summary presents aggregate costs broken down by engines used in nonhandheld and those used in handheld equipment.[19] For greater detail of expected cost impacts, see the RSD.

A. Industry Cost Impacts

Industry will bear pollution control costs that are moderate: roughly 6 percent for handheld and 2 percent for nonhandheld equipment relative to current production costs. The level of pollution control costs is largely due to the high levels of pollution emitted by these engines, especially two-stroke engines, and the relatively outdated state of the technology compared to on-highway engines. However, the costs are still small in absolute terms, and it is anticipated that these costs will be passed through to consumers in higher product prices.

The Agency estimates that there will be no long run negative impacts on employment as a result of this rule, as costs can be recovered through increased prices. Any potential decreases in employment that might occur due to obsolescence of product line should be offset by increased production of engines meeting emission standards. Total demand for these products has traditionally been relatively inelastic and, thus, industry sales volume is not expected to decrease.

On average, the cost to the engine manufacturer to install the necessary emission control technology will be approximately $2 per engine used in nonhandheld equipment and $3.50 per engine used in handheld equipment. This includes variable hardware and production costs, assuming that catalytic converters will not be needed to comply with proposed standards. However, engine manufacturers may voluntarily decide to use catalysts on a percentage of engines at risk of only marginally complying. Should this occur, EPA estimates that the additional variable hardware costs will be about $4 per catalyst-equipped engine. Since catalysts are not expected to be used much, the overall sales-weighted average increase due to catalyst usage is estimated to be about $1 for engines used in nonhandheld equipment and marginal for engines used in handheld equipment. It should be noted that the costs between manufacturers will likely vary.

B. Consumer Cost Impacts

Consumers will find small increases in retail prices for most equipment powered by these engines. The initial purchase price to the consumer will, however, be partially or, in some cases, completely offset by savings in fuel and maintenance costs. Thus, over time, environmentally friendly equipment will become less costly to consumers.

The retail price of equipment that uses nonhandheld engines ranges from $90 to $9,000, and the retail price of equipment that uses handheld engines ranges from $60 to $1,000. The sales-weighted average increase in retail cost to the consumer due to the rule in 2003 is estimated to be about $5 for nonhandheld equipment and $7 for handheld equipment. If catalysts are necessary, the values in 2003 are about $7 for both nonhandheld and handheld equipment. The retail price effects for a specific engine will likely be more or less these values, depending on the technology of the engine; these are average, sales-weighted costs, not indicative of the price increase specific to any particular manufacturer's engine or equipment.

This rule is expected to decrease fuel consumption significantly. The average sales-weighted engine is expected to experience a 26 percent decrease in fuel consumption for nonhandheld equipment and a 13 percent decrease in fuel consumption for handheld equipment. These decreases are translated into small discounted lifetime sales-weighted fuel savings of approximately $3 for nonhandheld equipment and marginal for handheld equipment.

The Agency expects that the engines produced to meet the proposed emission standards will be of higher quality than current engines: the parts and raw materials will be more durable and less likely to malfunction, as discussed in the RSD. This will result in equipment that lasts longer and is operational a higher percentage of the time; however, EPA is unable to quantify the attendant decrease in consumer cost or increase in useful life at this time. The Agency requested comments on the potential decrease in maintenance costs and increase in useful life, but none were received that shed light on this topic.

Considering that the fuel savings offset the average increase in retail price per engine, the average sales-weighted lifetime increase in cost will be about $6.50 per handheld engine, while nonhandheld engines will realize a lifetime savings of about $2.50 per engine. This does not include the lifetime savings in maintenance costs, which should further benefit the consumer.

C. Cost-Effectiveness

Based upon the costs and benefits described above, EPA has prepared a cost-effectiveness analysis and has performed a Regulatory Impact Analysis (RIA) for this rule, which is contained in the RSD. Presented here is a summary of the cost-effectiveness of the small SI engine Phase 1 program, assuming catalysts are not used.

If all program costs are allocated to HC, this rule has a cost-effectiveness of $280 per ton of HC reduced.

[19] These estimate costs are based on the assumption that manufacturers of engines used in snowthrowers and ice augers will opt to certify such engines to meet the applicable HC standards. To the extent that this does not occur, estimated industry cost impacts and consumer cost impacts would be reduced, and cost-effectiveness of the program would not be significantly changed, if at all.

Alternatively, if all program costs are allocated to CO, the cost-effectiveness is $113 per ton of CO reduced. If the costs of the program are equally split between HC and CO, the cost-effectiveness is $140 per ton of HC reduced and $57 per ton of CO reduced. These cost-effectiveness numbers are significantly lower than costs per ton of other available control strategies. The cost-effectiveness estimates, underlying quantitative methodology, and comparisons to other available control strategies are explained further in the RSD.

In summary, the cost-effectiveness of the rule is favorable relative to the cost-effectiveness of several other control measures required under the Clean Air Act. To the extent that cost-effective nationwide controls are applied to small SI engines, the need to apply more expensive additional controls to other mobile and stationary sources of air pollution may be reduced in the future.

VII. Administrative Requirements

A. Administrative Designation and Regulatory Analysis

Under Executive Order 12866,[20] the Agency must determine whether the regulatory action is ''significant'' and therefore subject to OMB review and the requirements of the Executive Order. The order defines ''significant regulatory action'' as one that is likely to result in a rule that may:

(1) Have an annual effect on the economy of $100 million or more or adversely affect in a material way the economy, a sector of the economy, productivity, competition, jobs, the environment, public health or safety, or State, local, or tribal governments or communities;

(2) Create a serious inconsistency or otherwise interfere with an action taken or planned by another agency;

(3) Materially alter the budgetary impact of entitlement, grants, user fees, or loan programs or the rights and obligations of recipients thereof;

(4) Raise novel legal or policy issues arising out of legal mandates, the President's priorities, or the principles set forth in the Executive Order.

Pursuant to the terms of Executive Order 12866, it has been determined that this rule is a ''significant regulatory action'' because this rulemaking adversely affects in a material way a sector of the economy, namely manufacturers of small SI engines, particularly the manufacturers who specialize in the production of small handheld engines. Further, EPA believes that an RIA is important for this rule because small SI engines have not previously been regulated. As such, this action was submitted to OMB for review. Changes made in response to OMB suggestions or recommendations are documented in the public record.

[20] 58 FR 51735 (October 4, 1993).

B. Paperwork Reduction Act

The information collection requirements in this rule have been submitted for approval to the Office of Management and Budget (OMB) under the Paperwork Reduction Act, 44 U.S.C. 3501 et seq. Copies of the ICR document may be obtained from Sandy Farmer, Information Policy Branch, EPA, 401 M Street, SW (PM–223Y), Washington, DC 20460 or by calling (202) 260–2740.

Table 3 provides a listing of this rulemaking's information collection requirements along with the appropriate information collection request (ICR) numbers. The cost of this burden has been incorporated into the cost estimate for this rule.

The Agency has estimated that the public reporting burden for the collection of information required under this rule would average approximately 5,800 hours annually for a typical engine manufacturer.[21] The hours spent by a manufacturer on information collection activities in any given year would be highly dependent upon manufacturer specific variables, such as the number of engine families, production changes, emission defects, etc.

TABLE 3.—PUBLIC REPORTING BURDEN

EPA ICR No.	Type of information	OMB control no.
1695.02 .	Certification	2060–0338
0282.06 .	Emission Defect Information.	2060–0048
1673.01 .	Importation of Non-conforming Engines.	2060–0294
1674.01 .	Selective Enforcement Auditing.	2060–0295
0012.07 .	Engine Exclusion Determination.	2060–0124
0095.03 .	Pre-certification and Testing Exemption.	2060–0007
1675.01 .	In-use Testing (proposed; not finalized).	2060–0292

Send comments regarding the burden estimate or any other aspect of this collection of information, including suggestions for reducing this burden to Chief, Information Policy Branch, EPA, 401 M Street, SW. (PM–223Y), Washington, DC 20460; and to the Office of Information and Regulatory Affairs, Office of Management and Budget, Washington, DC 20503, marked ''Attention: Desk Officer for EPA.''

[21] This estimate is based on the assumption that manufacturers of engines used in snowthrowers and ice augers will opt to certify those engines to meet the applicable HC standards. To the extent that this does occur, the Agency does not estimate the average reporting burden will change.

C. Unfunded Mandates Act

Section 202 of the Unfunded Mandates Reform Act of 1995 (''Unfunded Mandates Act'') (signed into law on March 22, 1995) requires that the Agency prepare a budgetary impact statement before promulgating a rule that includes a Federal mandate that may result in expenditure by State, local, and tribal governments, in aggregate, or by the private sector, of $100 million or more in any one year. Section 203 requires the Agency to establish a plan for obtaining input from and informing, educating, and advising any small governments that may be significantly or uniquely affected by the rule.

Under section 205 of the Unfunded Mandates Act, the Agency must identify and consider a reasonable number of regulatory alternatives before promulgating a rule for which a budgetary impact statement must be prepared. The Agency must select from those alternatives the least costly, most cost-effective, or least burdensome alternative that achieves the objectives of the rule, unless the Agency explains why this alternative is not selected or the selection of this alternative is inconsistent with law.

Because this final rule is estimated to result in the expenditure by State, local, and tribal governments or the private sector of less than $100 million in any one year, the Agency has not prepared a budgetary impact statement or specifically addressed the selection of the least costly, most cost-effective or least burdensome alternative. Because small governments will not be significantly or uniquely affected by this rule, the Agency is not required to develop a plan with regard to small governments.

D. Regulatory Flexibility Act

The Regulatory Flexibility Act (5 U.S.C. 601, *et seq.*) requires EPA to consider potential impacts of proposed regulations on small business ''entities.'' If a preliminary analysis indicates that a proposed regulation would have a significant economic impact on 20 percent or more of small entities, then a regulatory flexibility analysis must be prepared.

The Agency has recently adopted a new approach to regulatory flexibility: for purposes of EPA's implementation of the Act, any impact is a significant impact, and any number of small entities is a substantial number.[22] Thus, EPA will consider regulatory options for every regulation subject to the Act that can reasonably be expected to have an impact on small entities. In light of this new approach, EPA has determined that this rule will have a significant effect on a substantial number of small entities. As a result, EPA tailored this rule to minimize the cost burdens imposed on smaller engine manufacturers. (See ''Small Entities'' in the Response to Comments for more discussion and comments.)

The regulations contain certification requirements for new engines, Selective Enforcement Auditing provisions for the testing of production engines, and prohibitions on incorrect engine use for equipment manufacturers. For example, the SEA program is structured such that manufacturers with lower annual production volumes have a decreased testing burden. Even though consideration was given to small entities in developing the requirements of this rule, it has recently come to EPA's attention that there may be a few businesses that are so small that even the reduced requirements could threaten their livelihood. In light of this, the Agency is currently considering exemptions or flexible requirements for small entities for all of its nonroad rules.

List of Subjects in 40 CFR Parts 9 and 90

Environmental protection, Administrative practice and procedure, Air pollution control, Confidential business information, Imports, Incorporation by reference, Labeling, Nonroad source pollution, Reporting and recordkeeping requirements.

Dated: May 30, 1995.

Carol M. Browner,

Administrator.

For the reasons set out in the preamble, title 40, chapter I of the Code of Federal Regulations is amended as follows:

PART 9—[AMENDED]

1. The authority citation for part 9 continues to read as follows:

Authority: 7 U.S.C. 135 *et seq.,* 136–136y; 15 U.S.C. 2001, 2003, 2005, 2006, 2601–2671; 21 U.S.C. 331j, 346a, 348; 31 U.S.C. 9701; 33 U.S.C. 1251 *et seq.,* 1311, 1313d, 1314, 1321, 1326, 1330, 1334, 1345(d) and (e), 1361; E.O. 11735, 38 FR 21243, 3 CFR, 1971–1975 Comp p. 973; 42 U.S.C. 241, 242b, 243, 246, 300f, 300g, 300g–1, 300g–2, 300g–3, 300g–4, 300g–5, 300g–6, 300j–1, 300j–2, 300j–3, 300j–4, 300j–9, 1857 *et seq.,* 6901–6992(k), 7401–7671(q), 7542, 9601–9657, 11023, 11048.

2. Section 9.1 is amended by adding new entries and a new heading to the table to read as follows:

§ 9.1 OMB approvals under the Paperwork Reduction Act.

* * * * *

40 CFR citation	OMB control No.
* * * * *	
Control of Emissions From New and In-use Nonroad Engines	
90.107–90.108	2060–0338
90.113	2060–0338
90.115–90.124	2060–0338
90.126	2060–0338
90.304–90.329	2060–0338
90.404–90.427	2060–0338
90.505–90.509	2060–0295
90.511–90.512	2060–0295
90.604	2060–0294
90.611–90.613	2060–0294
90.800	2060–0048
90.802–90.804	2060–0048
90.806	2060–0048
90.903	2060–0124
90.905–90.906	2060–0007

3. Part 90 is added to read as follows:

PART 90—CONTROL OF EMISSIONS FROM NONROAD SPARK–IGNITION ENGINES

Subpart A—General

Sec.

90.1 Applicability.
90.2 Effective dates.
90.3 Definitions.
90.4 Treatment of confidential information.
90.5 Acronyms and abbreviations.
90.6 Table and figure numbering; position.
90.7 Reference materials.

Subpart B—Emission Standards and Certification Provisions

90.101 Applicability.
90.102 Definitions.
90.103 Exhaust emission standards.
90.104 Compliance with emission standards.
90.105 Useful life period.
90.106 Certificate of conformity.
90.107 Application for certification.
90.108 Certification.
90.109 Requirement of certification—closed crankcase.
90.110 Requirement of certification—prohibited controls.
90.111 Requirement of certification—prohibition of defeat devices.
90.112 Requirement of certification—adjustable parameters.
90.113 In-use testing programs.
90.114 Requirement of certification—engine information label.
90.115 Requirement of certification—supplying production engines upon request.
90.116 Certification procedure—determining engine displacement, engine class, and engine families.
90.117 Certification procedure—test engine selection.
90.118 Certification procedure—service accumulation.
90.119 Certification procedure—testing.
90.120 Certification procedure—use of special test procedures.
90.121 Certification procedure—recordkeeping.
90.122 Amending the application and certificate of conformity.
90.123 Denial, revocation of certificate of conformity.
90.124 Request for hearing.
90.125 Hearing procedures.
90.126 Right of entry and access.

Subpart C—[Reserved]

Subpart D—Emission Test Equipment Provisions

90.301 Applicability.
90.302 Definitions.
90.303 Symbols, acronyms, abbreviations.
90.304 Test equipment overview.
90.305 Dynamometer specifications and calibration accuracy.
90.306 Dynamometer torque cell calibration.
90.307 Engine cooling system.
90.308 Lubricating oil and test fuels.
90.309 Engine intake air temperature measurement.
90.310 Engine intake air humidity measurement.
90.311 Test conditions.
90.312 Analytical gases.
90.313 Analyzers required.
90.314 Analyzer accuracy and specifications.
90.315 Analyzer initial calibration.
90.316 Hydrocarbon analyzer calibration.
90.317 Carbon monoxide analyzer calibration.
90.318 Oxides of nitrogen analyzer calibration.
90.319 NO_X converter check.
90.320 Carbon dioxide analyzer calibration.
90.321 NDIR analyzer calibration.
90.322 Calibration of other equipment.
90.323 Analyzer bench checks.
90.324 Analyzer leakage check.
90.325 Analyzer interference checks.
90.326 Pre-and post-test analyzer calibration.
90.327 Sampling system requirements.
90.328 Measurement equipment accuracy/calibration frequency table.
90.329 Catalyst thermal stress test.

Appendix A to Subpart D—Tables

Appendix B to Subpart D—Figures

Subpart E—Gaseous Exhaust Test Procedures

90.401 Applicability.
90.402 Definitions.
90.403 Symbols, acronyms, and abbreviations.

[22] Habicht, F. Henry II, Deputy Administrator, Internal EPA Memorandum, ''Revised Guidelines for Implementing the Regulatory Flexibility Act,'' April 9, 1992.

90.404 Test procedure overview.
90.405 Recorded information.
90.406 Engine parameters to be measured and recorded.
90.407 Engine inlet and exhaust systems.
90.408 Pre-test procedures.
90.409 Engine dynamometer test run.
90.410 Engine test cycle.
90.411 Post-test analyzer procedures.
90.412 Data logging.
90.413 Exhaust sample procedure—gaseous components.
90.414 Raw gaseous exhaust sampling and analytical system description.
90.415 Raw gaseous sampling procedures.
90.416 Intake air flow measurement specifications.
90.417 Fuel flow measurement specifications.
90.418 Data evaluation for gaseous emissions.
90.419 Raw emission sampling calculations—gasoline fueled engines.
90.420 CVS concept of exhaust gas sampling system.
90.421 Dilute gaseous exhaust sampling and analytical system description.
90.422 Background sample.
90.423 Exhaust gas analytical system; CVS grab sample.
90.424 Dilute sampling procedures—CVS calibration.
90.425 CVS calibration frequency.
90.426 Dilute emission sampling calculations—gasoline fueled engines.
90.427 Catalyst thermal stress resistance evaluation.

Appendix A to Subpart E—Tables

Appendix B to Subpart E—Figures

Subpart F—Selective Enforcement Auditing

90.501 Applicability.
90.502 Definitions.
90.503 Test orders.
90.504 Testing by the Administrator.
90.505 Maintenance of records; submittal of information.
90.506 Right of entry and access.
90.507 Sample selection.
90.508 Test procedures.
90.509 Calculation and reporting of test results.
90.510 Compliance with acceptable quality level and passing and failing criteria for selective enforcement audits.
90.511 Suspension and revocation of certificates of conformity.
90.512 Request for public hearing.
90.513 Administrative procedures for public hearing.
90.514 Hearing procedures.
90.515 Appeal of hearing decision.
90.516 Treatment of confidential information.

Appendix A to Subpart F—Sampling Plans for Selective Enforcement Auditing of Nonroad Engines

Subpart G—Importation of Nonconforming Engines

90.601 Applicability.
90.602 Definitions.
90.603 (Reserved)
90.604 General requirements.
90.605–90.610 (Reserved)
90.611 Importation for purposes other than resale.
90.612 Exemptions and exclusions.
90.613 Prohibited acts; penalties.
90.614 Treatment of confidential information.

Subpart H—[Reserved]

Subpart I—Emission-related Defect Reporting Requirements, Voluntary Emission Recall Program

90.801 Applicability.
90.802 Definitions.
90.803 Emission defect information report.
90.804 Voluntary emissions recall.
90.805 Reports, voluntary recall plan filing, record retention.
90.806 Responsibility under other legal provisions preserved.
90.807 Disclaimer of production warranty applicability.

Subpart J—Exclusion and Exemption of Nonroad Engines From Regulations

90.901 Applicability.
90.902 Definitions.
90.903 Exclusions, applications of section 216(10) of the Act.
90.904 Who may request an exemption.
90.905 Testing exemption.
90.906 Manufacturer-owned exemption and precertification exemption.
90.907 Display exemption.
90.908 National security exemption.
90.909 Export exemptions.
90.910 Granting of exemptions.
90.911 Submission of exemption requests.
90.912 Treatment of confidential information.

Subpart K—Prohibited Acts and General Enforcement Provisions

90.1001 Applicability.
90.1002 Definitions.
90.1003 Prohibited acts.
90.1004 General enforcement provisions.
90.1005 Injunction proceedings for prohibited acts.
90.1006 Penalties.

Subpart L—Emission Warranty and Maintenance Instructions

90.1101 Applicability.
90.1102 Definitions.
90.1103 Emission warranty, warranty period.
90.1104 Furnishing of maintenance instructions to ultimate purchaser.

Authority: Sections 203, 204, 205, 206, 207, 208, 209, 213, 215, 216, and 301(a) of the Clean Air Act, as amended (42 U.S.C. 7522, 7523, 7524, 7525, 7541, 7542, 7543, 7547, 7549, 7550, and 7601(a)).

Subpart A—General

§ 90.1 Applicability.

(a) This part applies to nonroad spark-ignition engines and vehicles that have a gross power output at or below 19 kilowatts (kW) and that are used for any purpose.

(b) Notwithstanding paragraph (a) of this section, the following nonroad engines and vehicles are not subject to the provisions of this part:

(1) Engines used to propel marine vessels as defined in the General Provisions of the United States Code, 1 U.S.C. 3 (1992);

(2) Engines that are both:

(i) Used in underground mining or in underground mining equipment; and

(ii) Regulated by the Mining Safety and Health Administration (MSHA) in 30 CFR parts 7, 31, 32, 36, 56, 57, 70, and 75;

(3) Engines used in motorcycles and regulated in 40 CFR part 86, subpart E;

(4) Engines used in aircraft as that term is defined in 40 CFR 87.1(a);

(5) Engines used in recreational vehicles and which are defined by the following criteria:

(i) The engine's rated speed is greater than or equal to 5,000 RPM;

(ii) The engine has no installed speed governor;

(iii) The engine is not used for the propulsion of a marine vessel; and

(iv) The engine does not meet the criteria to be categorized as a Class III, IV, or V engine, as indicated in § 90.103.

(c) Engines subject to the provisions of this subpart are also subject to the provisions of subparts B, D, E, F, G, I, J, K, and L of this part.

§ 90.2 Effective dates.

(a) This subpart applies to nonroad spark-ignition engines at or below 19 kW effective with the 1997 model year.

(b) Notwithstanding paragraph (a) of this section, this subpart applies to class V engines, as specified in § 90.116(b)(5), that are preempted from regulation in California by section 209(e)(1)(A) of the Act, effective January 1, 1998.

§ 90.3 Definitions.

The following definitions apply to part 90. All terms not defined herein have the meaning given them in the Act.

Act means the Clean Air Act, as amended, 42 U.S.C. 7401 et seq.

Adjustable parameter means any device, system, or element of design which is physically capable of being adjusted (including those which are difficult to access) and which, if adjusted, may affect emissions or engine performance during emission testing or normal in-use operation.

Administrator means the Administrator of the Environmental Protection Agency or his or her authorized representative.

Auxiliary emission control device (AECD) means any element of design that senses temperature, vehicle speed, engine RPM, transmission gear, or any

other parameter for the purpose of activating, modulating, delaying, or deactivating the operation of any part of the emission control system.

Certification means, with respect to new nonroad engines, obtaining a certificate of conformity for an engine family complying with the nonroad engine emission standards and requirements specified in this part.

Emission control system means any device, system, or element of design which controls or reduces the emission of substances from an engine.

Engine as used in this part, refers to nonroad engine.

Engine family means a group of engines, as specified in § 90.116.

Engine manufacturer means any person engaged in the manufacturing or assembling of new nonroad engines or the importing of such engines for resale, or who acts for and is under the control of any such person in connection with the distribution of such engines. Engine manufacturer does not include any dealer with respect to new nonroad engines received by such person in commerce.

EPA enforcement officer means any officer, employee, or authorized representative of the U.S. Environmental Protection Agency so designated in writing by the Administrator (or by his or her designee).

Exhaust emissions means matter emitted into the atmosphere from any opening downstream from the exhaust port of a nonroad engine.

Fuel system means all components involved in the transport, metering, and mixture of the fuel from the fuel tank to the combustion chamber(s) including the following: fuel tank, fuel tank cap, fuel pump, fuel lines, oil injection metering system, carburetor or fuel injection components, and all fuel system vents.

Gross power means the power measured at the crankshaft or its equivalent, the engine being equipped only with the standard accessories (such as oil pumps, coolant pumps, and so forth) necessary for its operation on the test bed.

Handheld equipment engine means a nonroad engine that meets the requirements specified in § 90.103(a)(2)(i) through (iv).

Model year (MY) means the manufacturer's annual new model production period which includes January 1 of the calendar year, ends no later than December 31 of the calendar year, and does not begin earlier than January 2 of the previous calendar year. Where a manufacturer has no annual new model production period, model year means calendar year.

New, for the purposes of this part, means a nonroad engine or nonroad vehicle the equitable or legal title to which has never been transferred to an ultimate purchaser. Where the equitable or legal title to the engine or vehicle is not transferred to an ultimate purchaser until after the engine or vehicle is placed into service, then the engine or vehicle will no longer be new after it is placed into service. A nonroad engine or vehicle is placed into service when it is used for its functional purposes. With respect to imported nonroad engines or nonroad vehicles, the term ''new'' means an engine or vehicle that is not covered by a certificate of conformity issued under this part at the time of importation, and that is manufactured after the effective date of a regulation issued under this part which is applicable to such engine or vehicle (or which would be applicable to such engine or vehicle had it been manufactured for importation into the United States).

Nonroad engine means:

(1) Except as discussed in paragraph (2) of this definition, any internal combustion engine:

(i) In or on a piece of equipment that is self-propelled or serves a dual purpose by both propelling itself and performing another function (such as garden tractors, off-highway mobile cranes, and bulldozers); or

(ii) In or on a piece of equipment that is intended to be propelled while performing its function (such as lawnmowers and string trimmers); or

(iii) That, by itself or in or on a piece of equipment, is portable or transportable, meaning designed to be and capable of being carried or moved from one location to another. Indicia of transportability include, but are not limited to, wheels, skids, carrying handles, dolly, trailer, or platform.

(2) An internal combustion engine is not a nonroad engine if:

(i) The engine is used to propel a motor vehicle or a vehicle used solely for competition, or is subject to standards promulgated under section 202 of the Act; or

(ii) The engine is regulated by a federal New Source Performance Standard promulgated under section 111 of the Act; or

(iii) The engine otherwise included in paragraph (1)(iii) of this definition remains or will remain at a location for more than 12 consecutive months or a shorter period of time for an engine located at a seasonal source. A location is any site at a building, structure, facility, or installation. Any engine (or engines) that replaces an engine at a location and that is intended to perform the same or similar function as the engine replaced will be included in calculating the consecutive time period. An engine located at a seasonal source is an engine that remains at a seasonal source during the full annual operating period of the seasonal source. A seasonal source is a stationary source that remains in a single location on a permanent basis (i.e., at least two years) and that operates at that single location approximately three months (or more) each year. This paragraph does not apply to an engine after the engine is removed from the location.

Nonroad vehicle means a vehicle that is powered by a nonroad engine as defined in this section and that is not a motor vehicle or a vehicle used solely for competition. Nonroad vehicle also includes equipment that is powered by nonroad engines.

Nonroad vehicle manufacturer means any person engaged in the manufacturing or assembling of new nonroad vehicles or importing such vehicles for resale, or who acts for and is under the control of any such person in connection with the distribution of such vehicles. A nonroad vehicle manufacturer does not include any dealer with respect to new nonroad vehicles received by such person in commerce.

Operating hours means:

(1) For engine storage areas or facilities, all times during which personnel other than custodial personnel are at work in the vicinity of the storage area or facility and have access to it.

(2) For all other areas or facilities, all times during which an assembly line is in operation or all times during which testing, maintenance, service accumulation, production or compilation of records, or any other procedure or activity related to certification testing, to translation of designs from the test stage to the production stage, or to engine manufacture or assembly is being carried out in a facility.

Presentation of credentials means the display of the document designating a person as an EPA enforcement officer or EPA authorized representative.

Scheduled maintenance means any adjustment, repair, removal, disassembly, cleaning, or replacement of components or systems required by the manufacturer to be performed on a periodic basis to prevent part failure or vehicle or engine malfunction, or those actions anticipated as necessary to correct an overt indication of malfunction or failure for which

periodic maintenance is not appropriate.

Test engine means the engine or group of engines that a manufacturer uses during certification to determine compliance with emission standards.

Ultimate purchaser means, with respect to any new nonroad engine or new nonroad vehicle, the first person who in good faith purchases such new nonroad engine or vehicle for purposes other than resale.

Used solely for competition means exhibiting features that are not easily removed and that would render its use other than in competition unsafe, impractical, or highly unlikely.

Warranty period means the period of time the engine or part is covered by the warranty provisions.

§ 90.4 Treatment of confidential information.

(a) Any manufacturer may assert that some or all of the information submitted pursuant to this part is entitled to confidential treatment as provided by part 2, subpart B of this chapter.

(b) Any claim of confidentiality must accompany the information at the time it is submitted to EPA.

(c) To assert that information submitted pursuant to this subpart is confidential, a manufacturer must indicate clearly the items of information claimed confidential by marking, circling, bracketing, stamping, or otherwise specifying the confidential information. Furthermore, EPA requests, but does not require, that the submitter also provide a second copy of its submittal from which all confidential information has been deleted. If a need arises to publicly release nonconfidential information, EPA will assume that the submitter has accurately deleted the confidential information from this second copy.

(d) If a claim is made that some or all of the information submitted pursuant to this subpart is entitled to confidential treatment, the information covered by that confidentiality claim will be disclosed by the Administrator only to the extent and by means of the procedures set forth in part 2, subpart B of this chapter.

(e) Information provided without a claim of confidentiality at the time of submission may be made available to the public by EPA without further notice to the submitter, in accordance with § 2.204(c)(2)(i)(A) of this chapter.

§ 90.5 Acronyms and abbreviations.

The following acronyms and abbreviations apply to part 90.

AECD—Auxiliary emission control device
ASME—American Society of Mechanical Engineers
ASTM—American Society for Testing and Materials
CAA—Clean Air Act
CAAA—Clean Air Act Amendments of 1990
CLD—chemiluminescent detector
CO—Carbon monoxide
CO_2—Carbon dioxide
EPA—Environmental Protection Agency
FTP—Federal Test Procedure
g/kW-hr—grams per kilowatt hour
HC—hydrocarbons
HCLD—heated chemiluminescent detector
HFID—heated flame ionization detector
ICI—independent Commercial Importer
NDIR—non-dispersive infrared analyzer
NIST—National Institute for Standards and Testing
NO—Nitric oxide
NO_2—Nitrogen dioxide
NO_X—Oxides of nitrogen
O_2—Oxygen
OEM—original equipment manufacturer
PMD—paramagnetic detector
SAE—Society of Automotive Engineers
SEA—Selective Enforcement Auditing
SI—spark-ignition
U.S.C.—United States Code
VOC—Volatile organic compounds
ZROD—zirconiumdioxide sensor

§ 90.6 Table and figure numbering; position.

(a) Tables for each subpart appear in an appendix at the end of the subpart. Tables are numbered consecutively by order of appearance in the appendix. The table title will indicate the topic.

(b) Figures for each subpart appear in an appendix at the end of the subpart. Figures are numbered consecutively by order of appearance in the appendix. The figure title will indicate the topic.

§ 90.7 Reference materials.

(a) *Incorporation by reference.* The documents in paragraph (b) of this section have been incorporated by reference. The incorporation by reference was approved by the Director of the Federal Register in accordance with 5 U.S.C. 552(a) and 1 CFR part 51. Copies may be inspected at U.S. EPA Air and Radiation Docket, room M–1500, 401 M Street, S.W., Washington D.C. 20460, or at the Office of the Federal Register, 800 North Capitol Street, NW., suite 700, Washington, DC.

(b) The following paragraphs and tables set forth the material that has been incorporated by reference in this part.

(1) *ASTM material.* The following table sets forth material from the American Society for Testing and Materials which has been incorporated by reference. The first column lists the number and name of the material. The second column lists the section(s) of this part, other than § 90.7, in which the matter is referenced. The second column is presented for information only and may not be all inclusive. Copies of these materials may be obtained from American Society for Testing and Materials, 1916 Race St., Philadelphia, PA 19103.

Document number and name	40 CFR part 90 reference
ASTM D86–93:	
Standard Test Method for Distillation of Petroleum Products	Appendix A to subpart D, Table 3.
ASTM D1319–89:	
Standard Test Method for Hydrocarbon Types in Liquid Petroleum Products by Fluorescent Indicator Adsorption.	Appendix A to subpart D, Table 3.
ASTM D2622–92:	
Standard Test Method for Sulfur in Petroleum Products by X-ray Spectrometry	Appendix A to subpart D, Table 3.
ASTM D2699–92:	
Standard Test Method for Knock Characteristics of Motor Fuels by the Research Method	Appendix A to subpart D, Table 3.
ASTM D2700–92:	
Standard Test Method for Knock Characteristics of Motor and Aviation Fuels by the Motor Method	Appendix A to subpart D, Table 3.
ASTM D3231–89:	
Standard Test Method for Phosphorus in Gasoline	Appendix A to subpart D, Table 3.
ASTM D3606–92:	
Standard Test Method for Determination of Benzene and Toluene in Finished Motor and Aviation Gasoline by Gas Chromatography.	Appendix A to subpart D, Table 3.
ASTM D5191–93a:	
Standard Test Method for Vapor Pressure of Petroleum Products (Mini Method)	Appendix A to subpart D, Table 3.

Document number and name	40 CFR part 90 reference
ASTM E29–93a: Standard Practice for Using Significant Digits in Test Data to Determine Conformance with Specifications.	90.116; 90.509.

(2) *SAE material.* The following table sets forth material from the Society of Automotive Engineers which has been incorporated by reference. The first column lists the number and name of the material. The second column lists the section(s) of this part, other than § 90.7, in which the matter is referenced. The second column is presented for information only and may not be all inclusive. Copies of these materials may be obtained from Society of Automotive Engineers International, 400 Commonwealth Dr., Warrendale, PA 15096–0001.

Document number and name	40 CFR part 90 reference
SAE J1930 September 1991, Electrical/Electronic Systems Diagnostic Terms, Definitions, Abbreviations and Acronyms	90.114
SAE Paper 770141, Optimization of a Flame Ionization Detector for Determination of Hydrocarbon in Diluted Automotive Exhausts, Glenn D. Reschke, 1977	90.316

Subpart B—Emission Standards and Certification Provisions

§ 90.101 Applicability.

The requirements of subpart B are applicable to all nonroad engines and vehicles subject to the provisions of subpart A of part 90.

§ 90.102 Definitions.

The definitions in subpart A of part 90 apply to this subpart. All terms not defined herein or in subpart A have the meaning given them in the Act. The following definitions also apply to this subpart.

Attitudinal control means the operator regulates either the horizontal or vertical position of the equipment, or both.

Carry means the operator completely bears the weight of the equipment, including the engine.

Support means that the operator holds the equipment in position so as to prevent it from falling, slipping or sinking. It is not necessary for the entire weight of the equipment to be borne by the operator.

§ 90.103 Exhaust emission standards.

(a) Exhaust emissions from new nonroad spark-ignition engines at or below 19 kilowatts (kW), effective with the 1997 model year, shall not exceed the following levels:

Exhaust Emission Standards (grams per kilowatt-hour)

Engine displacement class	Hydrocarbon plus oxides of nitrogen	Hydrocarbon	Carbon monoxide	Oxides of nitrogen
I	16.1	.....	469	.....
II	13.4	.....	469	.....
III	.....	295	805	5.36
IV	.....	241	805	5.36
V	.....	161	603	5.36

(1) Each engine displacement class has a unique set of exhaust emission standards. Boundaries for each class are indicated in § 90.116(b).

(2) Emission standards for classes III, IV, V may be used only if an engine meets at least one of the following requirements:

(i) The engine must be used in a piece of equipment that is carried by the operator throughout the performance of its intended function(s);

(ii) The engine must be used in a piece of equipment that must operate multipositionally, such as upside down or sideways, to complete its intended function(s);

(iii) The engine must be used in a piece of equipment for which the combined engine and equipment dry weight is under 14 kilograms, no more than two wheels are present on the equipment, and at least one of the following attributes is also present:

(A) The operator must alternately provide support or carry the equipment throughout the performance of its intended function(s);

(B) The operator must provide support or attitudinal control for the equipment throughout the performance of its intended function(s); and

(C) The engine must be used in a generator or pump;

(iv) The engine must be used to power one-person augers, with a combined engine and equipment dry weight under 20 kilograms.

(3) Notwithstanding paragraph (a)(2) of this section, two-stroke engines used to power lawnmowers may meet class III, IV, or V standards until model year 2003.

(4) Notwithstanding paragraph (a)(2) of this section, two-stroke engines used to power snowthrowers may meet class III, IV, or V standards.

(5) Notwithstanding paragraph (a)(2) of this section, engines used exclusively to power snowthrowers or ice augers, at the option of the engine manufacturer, need not certify to or comply with standards regulating emissions of hydrocarbons. If the manufacturer exercises the option to certify to standards regulating such emissions, such engines must meet such standards. If the engine produced by the manufacturer is to be used in any equipment or vehicle other than a snowthrower or ice auger, it must be certified to the applicable standard regulating emissions of hydrocarbons.

(b) Exhaust emissions will be measured using the procedures set forth in subpart E of this part.

§ 90.104 Compliance with emission standards.

(a) If all test engines representing an engine family have emissions less than or equal to each emission standard in a given engine displacement class, that family complies with that class of emission standards.

(b) If any test engine representing an engine family has emissions greater than any one emission standard in a given engine displacement class, that family will be deemed not in compliance with that class of emission standards.

(c) If catalysts are used in an engine family, the engine manufacturer must affirm that catalyst durability has been confirmed on the basis of the evaluation procedure that is specified in subpart E of this part.

§ 90.105 Useful life period.

A useful life period for engines subject to the provisions of subpart A of this part will be set by the Agency in the second phase of small engine regulation and will be promulgated no later than April 30, 1997.

§ 90.106 Certificate of conformity.

(a) Except as specified in § 90.2(b), every manufacturer of new engines produced during or after model year 1997 must obtain a certificate of conformity covering such engines; however, engines manufactured during an annual production period beginning prior to September 1, 1996 are not required to be certified.

(b)(1) The annual production period begins either when an engine family is first produced or on January 2 of the calendar year preceding the year for which the model year is designated, whichever date is later. The annual production period ends either when the last engine is produced or on December 31 of the calendar year for which the model year is named, whichever date is sooner.

(2) Notwithstanding paragraph (b)(1) of this section, annual production periods beginning prior to September 1, 1996 may not exceed 12 months in length.

(c) Except as provided in paragraph (d) of this section, a certificate of conformity is deemed to cover the engines named in such certificate and produced during the annual production period, as defined in paragraph (b) of this section.

(d) Except as provided in paragraph (e) of this section, the certificate of conformity must be obtained from the Administrator prior to selling, offering for sale, introducing into commerce, or importing into the United States the new engine. Engines produced prior to the effective date of a certificate of conformity may also be covered by the certificate, once it is effective, if the following conditions are met:

(1) The engines conform in all respects to the engines described in the application for the certificate of conformity.

(2) The engines are not sold, offered for sale, introduced into commerce, or delivered for introduction into commerce prior to the effective date of the certificate of conformity.

(3) EPA is notified prior to the beginning of production when such production will start, and EPA is provided a full opportunity to inspect and/or test the engines during and after their production. EPA must have the opportunity to conduct SEA production line testing as if the vehicles had been produced after the effective date of the certificate.

(e) Engines that are certified by EPA prior to January 2, 1996 for model year 1997 may be delivered for introduction into commerce prior to January 2, 1996 once a certificate of conformity has been issued.

(f) Engines imported by an original equipment manufacturer after December 31 of the calendar year for which the model year is named are still covered by the certificate of conformity as long as the production of the engine was completed before December 31 of that year.

§ 90.107 Application for certification.

(a) For each engine family, the engine manufacturer must submit to the Administrator a completed application for a certificate of conformity.

(b) The application must be approved and signed by the authorized representative of the manufacturer.

(c) The application must be updated and corrected by amendment as provided in § 90.122 to accurately reflect the manufacturer's production.

(d) *Required content.* Each application must include the following information:

(1) A description of the basic engine design including, but not limited to, the engine family specifications;

(2) An explanation of how the emission control system operates, including a detailed description of all emission control system components (Detailed component calibrations are not required to be included; they must be provided if requested, however.), each auxiliary emission control device (AECD), and all fuel system components to be installed on any production or test engine(s);

(3) Proposed test engine(s) selection and the rationale for the test engine(s) selection;

(4) Special or alternate test procedures, if applicable;

(5) A description of the operating cycle and the service accumulation period necessary to break-in the test engine(s) and stabilize emission levels and any maintenance scheduled;

(6) A description of all adjustable operating parameters including the following:

(i) The nominal or recommended setting and the associated production tolerances;

(ii) The intended physically adjustable range;

(iii) The limits or stops used to establish adjustable ranges;

(iv) Production tolerances of the limits or stops used to establish each physically adjustable range; and

(v) Information relating to why the physical limits or stops used to establish the physically adjustable range of each parameter, or any other means used to inhibit adjustment, are effective in preventing adjustment of parameters to settings outside the manufacturer's intended physically adjustable ranges on in-use engines;

(7) The proposed maintenance instructions the manufacturer will furnish to the ultimate purchaser of each new nonroad engine and the proposed engine information label;

(8) All test data obtained by the manufacturer on each test engine;

(9) A statement that the test engine(s), as described in the manufacturer's application for certification, has been tested in accordance with the applicable test procedures, utilizing the fuels and equipment required under subparts D and E of this part, and that on the basis of such tests the engine(s) conforms to the requirements of this part; and

(10) An unconditional statement certifying that all engines in the engine family comply with all requirements of this part and the Clean Air Act.

(e)(1) In addition to the information specified in paragraph (d) of this section, manufacturers of two-stroke lawnmower engines must submit with their application for a certificate of conformity:

(i) For model year 1997, information establishing the highest number of two-stroke lawnmower engines produced in a single annual production period from 1992 through 1994. This number will be known as the production baseline.

(ii) For model years 1998 through 2002, information documenting the previous year's production and

projected production for the current year.

(2) In model year 1997, two-stroke lawnmower engine manufacturers may produce up to 100 percent of their production baseline established under paragraph (e)(1)(i) of this section.

(3) In model year 1998, two-stroke lawnmower engine manufacturers may produce up to 75 percent of their production baseline.

(4) From model years 1999 through 2002, two-stroke lawnmower engine manufacturers may produce up to 50 percent of their production baseline.

(5) In model year 2003, two-stroke lawnmower engine manufacturers must meet class I or II standards specified in § 90.103(a). If in model year 2003 those standards have been superseded by Phase 2 standards, two-stroke lawnmower engine manufacturers must meet the Phase 2 standards that are equivalent to the class I or II standards.

(f) At the Administrator's request, the manufacturer must supply such additional information as may be required to evaluate the application including, but not limited to, projected nonroad engine production.

§ 90.108 Certification.

(a) If, after a review of the manufacturer's submitted application, information obtained from any inspection, and such other information as the Administrator may require, the Administrator determines that the application is complete and that the engine family meets the requirements of this part and the Clean Air Act, the Administrator shall issue a certificate of conformity.

(b) The Administrator shall give a written explanation when certification is denied. The manufacturer may request a hearing on a denial. (See § 90.124 for procedure.)

§ 90.109 Requirement of certification—closed crankcase.

(a) An engine's crankcase must be closed.

(b) For purposes of this section, ''crankcase'' means the housing for the crankshaft and other related internal parts.

§ 90.110 Requirement of certification—prohibited controls.

(a) An engine may not be equipped with an emission control device, system, or element of design for the purpose of complying with emission standards if such device, system, or element of design will cause or contribute to an unreasonable risk to public health, welfare, or safety in its operation or function.

(b) An engine with an emission control device, system, or element of design may not emit any noxious or toxic substance which would not be emitted in the operation of such engine in the absence of the device, system, or element of design except as specifically permitted by regulation.

§ 90.111 Requirement of certification—prohibition of defeat devices.

(a) An engine may not be equipped with a defeat device.

(b) For purposes of this section, ''defeat device'' means any device, system, or element of design which senses operation outside normal emission test conditions and reduces emission control effectiveness.

(1) Defeat device includes any auxiliary emission control device (AECD) that reduces the effectiveness of the emission control system under conditions which may reasonably be expected to be encountered in normal operation and use unless such conditions are included in the test procedure.

(2) Defeat device does not include such items which either operate only during engine starting or are necessary to protect the engine (or vehicle in which it is installed) against damage or accident during its operation.

§ 90.112 Requirement of certification—adjustable parameters.

(a) Engines equipped with adjustable parameters must comply with all requirements of this subpart for any specification within the physically available range.

(b) An operating parameter is not considered adjustable if it is permanently sealed by the manufacturer or otherwise not normally accessible using ordinary tools.

(c) The Administrator may require that adjustable parameters be set to any specification within the adjustable range during certification or a selective enforcement audit to determine compliance with the requirements of this subpart.

§ 90.113 In-use testing program.

(a) At the time of certification the engine manufacturer may propose which engine families should be included in an in-use test program. EPA will approve a manufacturer's test program if the selected engine families represent an adequate consideration of the elements listed in paragraphs (b) and (c) of this section.

(b) *Number of engines to be tested.* The number of engines to be tested by a manufacturer is determined by the following method:

(1) For an engine manufacturer with total projected annual production of more than 75,000 engines destined for the United States market for that model year, the minimum number of engines to be tested may be the lowest of the numbers determined in paragraph (b)(1)(i), (ii) or (iii) of this section:

(i) Divide the manufacturer's total projected annual production of small SI engines destined for the United States market for that model year by 50,000, and round to the nearest whole number;

(ii) Test five engines each from 25 percent of all engine families certified in that model year; and

(iii) Test three engines each from 50 percent of all engine families certified in that model year.

(2) An engine manufacturer with total projected annual production of 75,000 engines or less destined for the United States market for that model year may test a minimum of two engines.

(c) *Criteria for selecting test engines.* An engine manufacturer may select test engines from engine families utilizing the following criteria and in the order specified:

(1) Engine families using emission control technology which most likely will be used on Phase 2 engines;

(2) Engine families using aftertreatment;

(3) Engine families certified to different emission standards;

(4) Different engine designs (such as sidevalve head versus overhead valve engines);

(5) Engine families using emission control technology specifically installed to achieve compliance with emission standards of this part;

(6) The engine family with the highest projected annual sales; and

(7) Engine families which meet the above criteria, but have not been included in prior model year in-use testing programs as required by these provisions.

(d) *Collection of in-use engines.* An engine manufacturer may procure in-use engines which have been operated for between half and three-quarters of the engine's advertised (or projected) useful life. All testing may be completed within three years from the date the certificate is first issued for an engine family undergoing in-use testing.

(1) Test engines may be procured from sources not associated with the engine manufacturer or vehicle manufacturer, except that with prior approval of the Administrator, an engine manufacturer with annual sales of less than 50,000 engines may obtain in-use engines associated with itself or its vehicle manufacturer.

(2) A test engine should have a maintenance history representative of actual in-use conditions.

(i) A manufacturer may question the end user regarding the accumulated usage, maintenance, operating conditions, and storage of the test engines.

(ii) Documents used in the procurement process may be maintained as required in § 90.121.

(3) *Maintenance and testing of test engines.*

(i) The manufacturer may perform minimal set-to-spec maintenance on a test engine. Maintenance may include only that which is listed in the owner's instructions for engines with the amount of service and age of the acquired test engine.

(ii) Documentation of all maintenance and adjustments may be maintained and retained as required by § 90.121.

(4) One valid emission test may be conducted for each in-use engine.

(5) If a selected in-use engine fails to comply with any applicable certification emission standard, the manufacturer may determine the reason for noncompliance. The manufacturer may report all determinations for noncompliance in its annual in-use test result report as described below.

(e) *In-use test program reporting.* The manufacturer may submit to the Administrator by January 30 of each calendar year all emission testing results generated from in-use testing. The following information may be reported for each test engine:

(1) Engine family;

(2) Model;

(3) Engine serial number;

(4) Date of manufacture;

(5) Estimated hours of use;

(6) Results of all emission testing;

(7) Summary of all maintenance and/or adjustments performed;

(8) Summary of all modifications and/or repairs; and

(9) Determinations of compliance and/or noncompliance.

(f) The Administrator may approve and/or suggest modifications to a manufacturer's in-use testing program.

§ 90.114 Requirement of certification—engine information label.

(a) The engine manufacturer must affix at the time of manufacture a permanent and legible label identifying each nonroad engine. The label must meet the following requirements:

(1) Be attached in such a manner that it cannot be removed without destroying or defacing the label;

(2) Be durable and readable for the entire engine life;

(3) Be secured to an engine part necessary for normal engine operation and not normally requiring replacement during engine life;

(4) Be written in English; and

(5) Be located so as to be readily visible to the average person after the engine is installed in the vehicle.

(b) If the nonroad vehicle obscures the label on the engine, the nonroad vehicle manufacturer must attach a supplemental label so that this label is readily visible to the average person. The supplemental label must:

(1) Be attached in such a manner that it cannot be removed without destroying or defacing the label;

(2) Be secured to a vehicle part necessary for normal operation and not normally requiring replacement during the vehicle life; and

(3) Be identical in content to the label which was obscured.

(c) The label must contain the following information:

(1) The heading ''Important Engine Information;''

(2) The full corporate name and trademark of the engine manufacturer;

(3) The statement, ''This (specify vehicle or engine, as applicable) is certified to operate on (specify operating fuel(s));''

(4) Identification of the Exhaust Emission Control System (Abbreviations may be used and must conform to the nomenclature and abbreviations provided in the Society of Automotive Engineers procedure J1930, ''Electrical/Electronic Systems Diagnostic Terms, Definitions, Abbreviations and Acronyms,'' September 1991. This procedure has been incorporated by reference. See § 90.7.);

(5) All engine lubricant requirements;

(6) Date of engine manufacture [day (optional), month and year];

(7) The statement ''This engine conforms to [model year] U.S. EPA regulations for small nonroad engines.'';

(8) EPA standardized engine family designation;

(9) Engine displacement [in cubic centimeters]; and

(10) Other information concerning proper maintenance and use or indicating compliance or noncompliance with other standards may be indicated on the label.

(d) If there is insufficient space on the engine (or on the vehicle where a supplemental label is required under paragraph (b) of this section) to accommodate a label including all the information required in paragraph (c) of this section, the manufacturer may delete or alter the label as indicated in this paragraph. The information deleted from the label must appear in the owner's manual.

(1) Exclude the information required in paragraphs (c)(3), (4), and (5) of this section. The fuel or lubricant may be specified elsewhere on the engine.

(2) Exclude the information required by paragraph (c)(6) of this section, if the date the engine was manufactured is stamped on the engine.

(e) The Administrator may, upon request, waive or modify the label content requirements of paragraphs (c) and (d) of this section, provided that the intent of such requirements is met.

§ 90.115 Requirement of certification—supplying production engines upon request.

Upon the Administrator's request, the manufacturer must supply a reasonable number of production engines for testing and evaluation. These engines must be representative of typical production and supplied for testing at such time and place and for such reasonable periods as the Administrator may require.

§ 90.116 Certification procedure—determining engine displacement, engine class, and engine families.

(a) Engine displacement must be calculated using nominal engine values and rounded to the nearest whole cubic centimeter in accordance with ASTM E29–93a. This procedure has been incorporated by reference. See § 90.7.

(b) Engines will be divided into classes by the following:

(1) Class I—engines less than 225 cc in displacement,

(2) Class II—engines greater than or equal to 225 cc in displacement,

(3) Class III—handheld equipment engines less than 20 cc in displacement,

(4) Class IV—handheld equipment engines equal or greater than 20 cc but less than 50 cc in displacement, and

(5) Class V—handheld equipment engines equal to or greater than 50 cc in displacement.

(c) The manufacturer's product line will be divided into groupings of engine families as specified by paragraph (d) of this section.

(d) To be classed in the same engine family, engines must be identical in all of the following applicable respects:

(1) The combustion cycle;

(2) The cooling mechanism;

(3) The cylinder configuration (inline, vee, opposed, bore spacings, and so forth);

(4) The number of cylinders;

(5) The engine class;

(6) The number of catalytic converters, location, volume, and composition; and

(7) The thermal reactor characteristics.

(e) At the manufacturer's option, engines identical in all the respects

listed in paragraph (d) of this section may be further divided into different engine families if the Administrator determines that they may be expected to have different emission characteristics. This determination is based upon the consideration of features such as:

(1) The bore and stroke;

(2) The combustion chamber configuration;

(3) The intake and exhaust timing method of actuation (poppet valve, reed valve, rotary valve, and so forth);

(4) The intake and exhaust valve or port sizes, as applicable;

(5) The fuel system;

(6) The exhaust system; and

(7) The method of air aspiration.

(f) Where engines are of a type which cannot be divided into engine families based upon the criteria listed in paragraph (d) of this section, the Administrator will establish families for those engines based upon the features most related to their emission characteristics.

§ 90.117 Certification procedure—test engine selection.

(a) The manufacturer must select, from each engine family, a test engine that the manufacturer determines to be most likely to exceed the emission standard.

(b) The test engine must be constructed to be representative of production engines.

§ 90.118 Certification procedure—service accumulation.

(a)(1) The test engine must be operated with all emission control systems operating properly for a period sufficient to stabilize emissions.

(2) The period sufficient to stabilize emissions may not exceed 12 hours.

(b) No maintenance, other than recommended lubrication and filter changes, may be performed during service accumulation without the Administrator's approval.

(c) Service accumulation is to be performed in a manner using good engineering judgment to ensure that emissions are representative of production engines.

(d) The manufacturer must maintain, and provide to the Administrator, records stating the rationale for selecting a service accumulation period less than 12 hours and records describing the method used to accumulate hours on the test engine(s).

§ 90.119 Certification procedure—testing.

(a) *Manufacturer testing.* The manufacturer must test the test engine using the specified test procedures and appropriate test cycle. All test results must be reported to the Administrator.

(1) The test procedure to be used is detailed in Subpart E of this part.

(i) Class I and II engines must use Test Cycle A described in Subpart E of this part, except that Class I and II engine families in which 100 percent of the engines sold operate only at rated speed may use Test Cycle B described in subpart E of this part.

(ii) Class III, IV, and V engines must use Test Cycle C described in subpart E of this part.

(2) Emission test equipment provisions are described in subpart D of this part.

(b) *Administrator testing.* (1) The Administrator may require that any one or more of the test engines be submitted to the Administrator, at such place or places as the Administrator may designate, for the purposes of conducting emission tests. The Administrator may specify that testing will be conducted at the manufacturer's facility, in which case instrumentation and equipment specified by the Administrator must be made available by the manufacturer for test operations. Any testing conducted at a manufacturer's facility must be scheduled by the manufacturer as promptly as possible.

(2)(i) Whenever the Administrator conducts a test on a test engine, the results of that test will, unless subsequently invalidated by the Administrator, comprise the official data for the engine and the manufacturer's data will not be used in determining compliance with emission standards.

(ii) Prior to the performance of such test, the Administrator may adjust or cause to be adjusted any adjustable parameter of the test engine which the Administrator has determined to be subject to adjustment for certification testing, to any setting within the physically adjustable range of that parameter, to determine whether such engine conforms to applicable emission standards.

(iii) For those engine parameters which the Administrator has not determined to be subject to adjustment for certification testing, the test engine presented to the Administrator for testing will be calibrated within the production tolerances applicable to the manufacturer specification shown on the engine label or in the owner's manual, as specified in the application for certification.

(c) *Use of carryover test data.* In lieu of testing, the manufacturer may submit, with the Administrator's approval, emission test data used to certify substantially similar engine families in previous years. This ''carryover'' test data is only allowable if the data shows the test engine would fully comply with the emission standards for the applicable class.

(d) *Scheduled maintenance during testing.* No scheduled maintenance may be performed during testing of the engine.

(e) *Unscheduled maintenance on test engines.*

(1) Manufacturers may not perform any unscheduled engine, emission control system, or fuel system adjustment, repair, removal, disassembly, cleaning, or replacement on a test engine without the advance approval of the Administrator.

(2) The Administrator may approve unscheduled maintenance if:

(i) A preliminary determination has been made that a part failure or system malfunction, or the repair of such failure or malfunction, does not render the engine unrepresentative of engines in use, and does not require direct access to the combustion chamber; and

(ii) A determination has been made that the need for maintenance or repairs is indicated by an overt malfunction such as persistent misfire, engine stall, overheating, fluid leakage, or loss of oil pressure.

(3) Emission measurements may not be used as a means of determining the need for unscheduled maintenance under paragraph (e)(2) of this section.

(4) The Administrator must have the opportunity to verify the extent of any overt indication of part failure (for example, misfire, stall), or an activation of an audible and/or visual signal, prior to the manufacturer performing any maintenance related to such overt indication or signal.

(5) Unless approved by the Administrator prior to use, engine manufacturers may not use any equipment, instruments, or tools to identify malfunctioning, maladjusted, or defective engine components unless the same or equivalent equipment, instruments, or tools are available at dealerships and other service outlets and are used in conjunction with scheduled maintenance on such components.

(6) If the Administrator determines that part failure or system malfunction occurrence and/or repair rendered the engine unrepresentative of production engines, the engine cannot be used as a test engine.

(7) Unless waived by the Administrator, complete emission tests are required before and after any engine maintenance which may reasonably be expected to affect emissions.

(f) *Engine failure.* A manufacturer may not use as a test engine any engine

which incurs major mechanical failure necessitating disassembly of the engine. This prohibition does not apply to failures which occur after completion of the service accumulation period.

§ 90.120 Certification procedure—use of special test procedures.

(a) *Use of special test procedures by EPA.* The Administrator may establish special test procedures for any engine that the Administrator determines is not susceptible to satisfactory testing under the specified test procedures set forth in subpart E of this part.

(b)(1) *Use of alternate test procedures by an engine manufacturer.* A manufacturer may elect to use an alternate test procedure provided that it yields results equal to the results from the specified test procedure in subpart E, its use is approved in advance by the Administrator, and the basis for equivalent results with the specified test procedure is fully described in the manufacturer's application.

(2) An engine manufacturer electing to use alternate test procedures is solely responsible for the results obtained. The Administrator may reject data generated under test procedures which do not correlate with data generated under the specified procedures.

§ 90.121 Certification procedure—recordkeeping.

(a) The engine manufacturer must maintain the following adequately organized records:

(1) Copies of all applications filed with the Administrator;

(2) A copy of all data obtained through the in-use testing program; and

(3) A detailed history of each test engine used for certification including the following:

(i) A description of the test engine's construction, including a general description of the origin and buildup of the engine, steps taken to insure that it is representative of production engines, description of components specially built for the test engine, and the origin and description of all emission-related components;

(ii) A description of the method used for engine service accumulation, including date(s) and the number of hours accumulated;

(iii) A description of all maintenance, including modifications, parts changes, and other servicing performed, and the date(s), and reason(s) for such maintenance;

(iv) A description of all emission tests performed including routine and standard test documentation, as specified in subpart E of this part, date(s), and the purpose of each test;

(v) A description of all tests performed to diagnose engine or emission control performance, giving the date and time of each and the reason(s) for the test; and

(vi) A description of any significant event(s) affecting the engine during the period covered by the history of the test engine but not described by an entry under one of the previous paragraphs of this section.

(b) Routine emission test data, such as those reporting test cell temperature and relative humidity at start and finish of test and raw emission results from each mode or test phase, must be retained for a period of one year after issuance of all certificates of conformity to which they relate. All other information specified in paragraph (a) of this section must be retained for a period of eight years after issuance of all certificates of conformity to which they relate.

(c) Records may be kept in any format and on any media, provided that, at the Administrator's request, organized, written records in English are promptly supplied by the manufacturer.

(d) The manufacturer must supply, at the Administrator's request, copies of any engine maintenance instructions or explanations issued by the manufacturer.

§ 90.122 Amending the application and certificate of conformity.

(a) The engine manufacturer must notify the Administrator when either an engine is to be added to a certificate of conformity or changes are to be made to a product line covered by a certificate of conformity. Notification occurs when the manufacturer submits an amendment to the original application prior to either producing such engines or making such changes to a product line.

(b) The amendment must request that the engine manufacturer's existing certificate of conformity be amended and include the following information:

(1) A full description of the engine to be added or the change(s) to be made in production;

(2) The manufacturer's proposed test engine selection(s); and

(3) Engineering evaluations or reasons why the original test engine is or is not still appropriate.

(c) The Administrator may require the engine manufacturer to perform tests on an engine representing the engine to be added or changed.

(d) *Decision by Administrator.* (1) Based on the submitted amendment and data derived from such testing as the Administrator may require or conduct, the Administrator must determine whether the proposed addition or change would still be covered by the certificate of conformity then in effect.

(2) If the Administrator determines that the new or changed engine(s) meets the requirements of this subpart and the Act, the appropriate certificate of conformity will be amended.

(3) If the Administrator determines that the proposed amendment would not be covered by the certificate of conformity, the Administrator must provide a written explanation to the engine manufacturer of his or her decision not to amend the certificate. The manufacturer may request a hearing on a denial.

(e)(1) Alternatively, an engine manufacturer may make changes in or additions to production engines concurrently with amending the application as set forth in paragraph (b) of this section, if the manufacturer determines that all affected engines will still meet applicable emission standards. The engine manufacturer must supply supporting documentation, test data, and engineering evaluations as appropriate to support its determination.

(2) If, after a review, the Administrator determines additional testing is required, the engine manufacturer must provide required test data within 30 days or cease production of the affected engines.

(3) If the Administrator determines that the affected engines do not meet applicable requirements, the Administrator will notify the engine manufacturer to cease production of the affected engines.

§ 90.123 Denial, revocation of certificate of conformity.

(a) If, after review of the engine manufacturer's application, request for certification, information obtained from any inspection, and any other information the Administrator may require, the Administrator determines that the test engine does not meet applicable standards and requirements, the Administrator will notify the manufacturer in writing, setting forth the basis for this determination.

(b) Notwithstanding the fact that engines described in the application may comply with all other requirements of this subpart, the Administrator may deny the issuance of or revoke a previously issued certificate of conformity if the Administrator finds any one of the following infractions to be substantial:

(1) The engine manufacturer submits false or incomplete information;

(2) The engine manufacturer denies an EPA enforcement officer or EPA authorized representative the

opportunity to conduct authorized inspections;

(3) The engine manufacturer fails to supply requested information or amend its application to include all engines being produced;

(4) The engine manufacturer renders inaccurate any test data which it submits or otherwise circumvents the intent of the Act or this part; or

(5) The engine manufacturer denies an EPA enforcement officer or EPA authorized representative reasonable assistance (as defined in § 90.506).

(c) If a manufacturer knowingly commits an infraction specified in paragraph (b)(1) or (b)(4) of this section or knowingly commits any fraudulent act which results in the issuance of a certificate of conformity, the Administrator may deem such certificate void ab initio.

(d) When the Administrator denies or revokes a certificate of conformity, the engine manufacturer will be provided a written determination. The manufacturer may request a hearing on the Administrator's decision.

(e) Any revocation of a certificate of conformity extends no further than to forbid the introduction into commerce of those engines previously covered by the certification which are still in the possession of the engine manufacturer, except in cases of such fraud or other misconduct that makes the certification void ab initio.

§ 90.124 Request for hearing.

(a) An engine manufacturer may request a hearing on the Administrator's denial or revocation of a certificate of conformity.

(b) The engine manufacturer's request must be filed within 30 days of the Administrator's decision, be in writing, and set forth the manufacturer's objections to the Administrator's decision and data to support the objections.

(c) If, after review of the request and supporting data, the Administrator finds that the request raises a substantial and factual issue, the Administrator will provide the engine manufacturer a hearing.

§ 90.125 Hearing procedures.

The hearing procedures set forth in §§ 90.513, 90.514, and 90.515 apply to this subpart.

§ 90.126 Right of entry and access.

Any engine manufacturer that has applied for certification of a new engine or engine family subject to certification testing under this subpart must admit or cause to be admitted to any applicable facilities during operating hours any EPA enforcement officer or EPA authorized representative as provided in § 90.506.

Subpart C—[Reserved]

Subpart D—Emission Test Equipment Provisions

§ 90.301 Applicability.

(a) This subpart describes the equipment required in order to perform exhaust emission tests on new nonroad spark-ignition engines and vehicles subject to the provisions of subpart A of part 90.

(b) Exhaust gases, either raw or dilute, are sampled while the test engine is operated using a steady state test cycle on an engine dynamometer. The exhaust gases receive specific component analysis determining concentration of pollutant. Emission concentrations are converted to mass emission rates in grams per hour based on either fuel flow, fuel flow and engine intake air flow, or exhaust volume flow. Weighted emission rates are reported as grams per brake-kilowatt hour (g/kW-hr). See subpart E of this part for a complete description of the test procedure.

(c) Additional information about system design, calibration methodologies, and so forth, for raw gas sampling can be found in part 86, subpart D of this chapter. Examples for system design, calibration methodologies, and so forth, for dilute exhaust gas sampling can be found in part 86, subpart N of this chapter.

§ 90.302 Definitions.

The definitions in § 90.3 apply to this subpart. The following definitions also apply to this subpart.

Rated speed means the speed at which the manufacturer specifies the maximum rated power of an engine.

Intermediate speed means the engine speed which is 85 percent of the rated speed.

§ 90.303 Symbols, acronyms, abbreviations.

(a) The acronyms and abbreviations in § 90.5 apply to this subpart.

(b) The symbols in Table 1 in Appendix A of this subpart apply to this subpart.

§ 90.304 Test equipment overview.

(a) All engines subject to this subpart are tested for exhaust emissions. Engines are operated on dynamometers meeting the specification given in § 90.305.

(b) The exhaust is tested for gaseous emissions using a raw gas sampling system as described in § 90.414 or a constant volume sampling (CVS) system as described in § 90.421. Both systems require analyzers (see paragraph (c) of this section) specific to the pollutant being measured.

(c) Analyzers used are a non-dispersive infrared (NDIR) absorption type for carbon monoxide and carbon dioxide analysis; paramagnetic (PMD), zirconia (ZRDO), or electrochemical type (ECS) for oxygen analysis; a flame ionization (FID) or heated flame ionization (HFID) type for hydrocarbon analysis; and a chemiluminescent detector (CLD) or heated chemiluminescent detector (HCLD) for oxides of nitrogen analysis.

§ 90.305 Dynamometer specifications and calibration accuracy.

(a) *Dynamometer specifications.* The dynamometer test stand and other instruments for measurement of speed and power output must meet the engine speed and torque accuracy requirements shown in Table 2 in Appendix A of this subpart. The dynamometer must be capable of performing the test cycle described in § 90.410.

(b) *Dynamometer calibration accuracy.* (1) The dynamometer test stand and other instruments for measurement of power output must meet the calibration frequency shown in Table 2 in Appendix A of this subpart.

(2) A minimum of three calibration weights for each range used is required. The weights must be equally spaced and traceable to within 0.5 percent of National Institute for Standards and Testing (NIST) weights. Laboratories located in foreign countries may certify calibration weights to local government bureau standards.

§ 90.306 Dynamometer torque cell calibration.

(a)(1) Any lever arm used to convert a weight or a force through a distance into a torque must be used in a horizontal position for horizontal shaft dynamometers (± five degrees). For vertical shaft dynamometers, a pulley system may be used to convert the dynamometer's horizontal loading into the vertical plane.

(2) Calculate the indicated torque (IT) for each calibration weight to be used by:

$$IT = \text{Moment Arm (meters)} \times \text{Calibration Weight (Newtons)}$$

(3) Attach each calibration weight specified in § 90.305(b)(2) to the moment arm at the calibration distance determined in paragraph (a)(2) of this section. Record the power measurement equipment response (N–m) to each weight.

(4) Compare the torque value measured to the calculated torque.

(5) The measured torque must be within two percent of the calculated torque.

(6) If the measured torque is not within two percent of the calculated torque, adjust or repair the system. Repeat steps in paragraphs (a)(1) through (a)(6) of this section with the adjusted or repaired system.

(b) Option. A master load-cell or transfer standard may be used to verify the torque measurement system.

(1) The master load-cell and read out system must be calibrated using weights specified in § 90.305(b)(2).

(2) Attach the master load-cell and loading system.

(3) Load the dynamometer to a minimum of three equally spaced torque values as indicated by the master load-cell for each in-use range used.

(4) The in-use torque measurement must be within two percent of the torque measured by the master system for each load used.

(5) If the in-use torque is not within two percent of the master torque, adjust or repair the system. Repeat steps in paragraphs (b)(2) through (b)(4) of this section with the adjusted or repaired system.

(c) Calibrated resistors may not be used for engine flywheel torque transducer calibration, but may be used to span the transducer prior to engine testing.

(d) Other engine dynamometer system calibrations such as speed are performed as specified by the dynamometer manufacturer or as dictated by good engineering practice.

§ 90.307 Engine cooling system.

An engine cooling system is required with sufficient capacity to maintain the engine at normal operating temperatures as prescribed by the engine manufacturer. Auxiliary fan(s) may be used to maintain sufficient engine cooling during engine dynamometer operation.

§ 90.308 Lubricating oil and test fuels.

(a) *Lubricating oil.* Use the engine lubricating oil which meets the engine manufacturer's specifications for a particular engine and intended usage.

(1) Manufacturers must use engine lubricants representative of commercially available engine lubricants.

(2) For 2-stroke engines, the fuel/oil mixture ratio must be that which is recommended by the manufacturer.

(b) *Test Fuels—Certification.* (1) The manufacturer must use gasoline having the specifications, or substantially equivalent specifications approved by the Administrator, as specified in Table 3 in Appendix A of this subpart for exhaust emission testing of gasoline fueled engines. As an option, manufacturers may use the fuel specified in § 86.1313–94(a) of this chapter for gasoline fueled engines.

(2) Alternative fuels, such as natural gas, propane, and methanol, used for exhaust emission testing and service accumulation of alternative fuel spark-ignition engines must be representative of commercially available alternative fuels.

(i) The manufacturer shall recommend the alternative fuel to be used for certification testing and engine service accumulation in accordance with paragraph (b)(3) of this section.

(ii) The Administrator shall determine the alternative fuel to be used for testing and engine service accumulation, taking into consideration the alternative fuel recommended by the manufacturer.

(3) Other fuels may be used for testing provided:

(i) They are commercially viable;

(ii) Information acceptable to the Administrator is provided to show that only the designated fuel would be used in customer service; and

(iii) Fuel specifications are approved in writing by the Administrator prior to the start of testing.

(c) *Test Fuels—Service Accumulation.* Unleaded gasoline representative of commercial gasoline generally available through retail outlets must be used in service accumulation for gasoline-fueled spark-ignition engines. As an alternative, the certification test fuels specified under paragraph (b) of this section may be used for engine service accumulation. Leaded fuel may not be used during service accumulation. Additional fuel requirements for service accumulation are as follows:

§ 90.309 Engine intake air temperature measurement.

(a) The measurement location must be within 10 cm of the engine intake system (i.e., the air cleaner, for most engines.)

(b) The temperature measurements must be accurate to within ± 2 °C.

§ 90.310 Engine intake air humidity measurement.

This section refers to engines which are supplied with intake air other than the ambient air in the test cell (i.e., air which has been pumped directly to the engine air intake system). For engines which use ambient test cell air for the engine intake air, the ambient test cell humidity measurement may be used.

(a) *Humidity conditioned air supply.* Air that has had its absolute humidity altered is considered humidity-conditioned air. For this type of intake air supply, the humidity measurements must be made within the intake air supply system and after the humidity conditioning has taken place.

(b) *Unconditioned air supply.* Humidity measurements in unconditioned intake air supply systems must be made in the intake air stream entering the supply system. Alternatively, the humidity measurements can be measured within the intake air supply stream.

§ 90.311 Test conditions.

(a) General requirements. (1) Ambient temperature levels encountered by the test engine throughout the test sequence may not be less than 20 °C or more than 30 °C. All engines must be installed on the test bed at their design installation angle to prevent abnormal fuel distribution.

(2) Calculate all volumes and volumetric flow rates at standard conditions for temperature and pressure, and use these conditions consistently throughout all calculations. Standard conditions for temperature and pressure are 25 °C and 101.3 kPa.

(b) *Engine test conditions.* Measure the absolute temperature (designated as T and expressed in Kelvin) of the engine air at the inlet to the engine and the dry atmospheric pressure (designated as p_s and expressed in kPa), and determine the parameter f according to the following provisions for naturally aspirated engines:

$$f = \frac{99}{p_s} \times \left(\frac{T}{298}\right)^{0.7}$$

For a certification test to be recognized as valid, the parameter f shall be between the limits as shown below: $0.96<f<1.04$

§ 90.312 Analytical gases.

(a) The shelf life of a calibration gas may not be exceeded. The expiration date stated by the gas supplier must be recorded.

(b) *Pure gases.* The required purity of the gases is defined by the contamination limits specified in this subsection. The following gases must be available for operation:

(1) Purified nitrogen, also refered to as ''zero-grade nitrogen'' (Contamination ≤ 1 ppm C, ≤ 1 ppm CO, ≤ 400 ppm CO_2, ≤ 0.1 ppm NO);

(2) Purified oxygen (Purity 99.5 percent vol O_2);

(3) Hydrogen-helium mixture (40 ± 2 percent hydrogen, balance helium) (Contamination ≤ 1 ppm C, ≤ 400 ppm CO);

(4) Purified synthetic air, also refered to as ''zero air'' or ''zero gas''

(Contamination ≤ 1 ppm C, ≤ 1 ppm CO, ≤ 400 ppm CO_2, ≤ 0.1 ppm NO) (Oxygen content between 18–21 percent vol.).

(c) *Calibration and span gases.* (1) Calibration gas values are to be derived from NIST ''Standard Reference Materials'' (SRM's) and are to be single blends as specified in this subsection.

(2) Mixtures of gases having the following chemical compositions must be available:

C_3H_8 and purified synthetic air and/or C_3H_8 and purified nitrogen;
CO and purified nitrogen;
NO_X and purified nitrogen (the amount of NO_2 contained in this calibration gas must not exceed five percent of the NO content);
CO_2 and purified nitrogen.

Note: For the HFID or FID the manufacturer may choose to use as a diluent span gas and the calibration gas either purified synthetic air or purified nitrogen. Any mixture of C_3H_8 and purified synthetic air which contains a concentration of propane higher than what a gas supplier considers to be safe may be substituted with a mixture of C_3H_8 and purified nitrogen. However, the manufacturer must be consistent in the choice of diluent (zero air or purified nitrogen) between the calibration and span gases. If a manufacturer chooses to use C_3H_8 and purified nitrogen for the calibration gases, then purified nitrogen must be the diluent for the span gases.

(3) The true concentration of a span gas must be within ± two percent of the NIST gas standard. The true concentration of a calibration gas must be within ± one percent of the NIST gas standard. The use of precision blending devices (gas dividers) to obtain the required calibration gas concentrations is acceptable. Give all concentrations of calibration gas on a volume basis (volume percent or volume ppm).

(4) The gas concentrations used for calibration and span may also be obtained by means of a gas divider, diluting either with purified N_2 or with purified synthetic air. The accuracy of the mixing device must be such that the concentration of the diluted gases may be determined to within ± two percent.

(d) Oxygen interference check gases must contain propane with 350 ppmC ± 75 ppmC hydrocarbon. Determine the concentration value to calibration gas tolerances by chromatographic analysis of total hydrocarbons plus impurities or by dynamic blending. For gasoline fueled engines, oxygen contentration must be between 0 and 1 percent O_2. Nitrogen must be the predominant diluent with the balance oxygen.

(e) Fuel for the hydrocarbon flame ionization detector (HC-FID) must be a blend of 40 ± two percent hydrogen with the balance being helium. The mixture must contain less than one ppm equivalent carbon response; 98 to 100 percent hydrogen fuel may be used with advance approval of the Administrator.

(f) *Hydrocarbon analyzer burner air.* The concentration of oxygen must be within one mole percent of the oxygen concentration of the burner air used in the latest oxygen interference check (percent O_2I), see § 90.316(d). If the difference in oxygen concentration is greater than one mole percent, then the oxygen interference must be checked and, if necessary, the analyzer adjusted to meet the percent O_2I requirements. The burner air must contain less than two ppmC hydrocarbon.

§ 90.313 Analyzers required.

(a) *Analyzers.* Analyze measured gases with the following instruments:

(1) *Carbon monoxide (CO) analysis.* (i) The carbon monoxide analyzer shall be of the non-dispersive infrared (NDIR) absorption type.

(ii) The use of linearizing circuits is permitted.

(2) *Carbon dioxide (CO_2)* analysis. (i) The carbon dioxide analyzer shall be of the non-dispersive infrared (NDIR) absorption type.

(ii) The use of linearizing circuits is permitted.

(3) *Oxygen (O_2)* analysis. Oxygen (O_2) analyzers may be of the paramagnetic (PMD), zirconia (ZRDO) or electrochemical type (ECS).

(4) *Hydrocarbon (HC) analysis.* (i) For Raw Gas Sampling, the hydrocarbon analyzer shall be of the heated flame ionization (HFID) type. For constant volume sampling, the hydrocarbon analyzer may be of the flame ionization (FID) type or of the heated flame ionization (HFID) type.

(ii) For the HFID system, if the temperature of the exhaust gas at the sample probe is below 190° C, the temperature of the valves, pipe work, and so forth, must be controlled so as to maintain a wall temperature of 190° C ±11° C. If the temperature of the exhaust gas at the sample probe is above 190° C, the temperature of the valves, pipe work, and so forth, must be controlled so as to maintain a wall temperature greater than 180° C.

(iii) For the HFID analyzer, the detector, oven, and sample-handling components within the oven must be suitable for continuous operation at temperatures to 200° C. It must by capable of maintaining temperature within ±5.5° C of the set point.

(iv) Fuel and burner air must conform to the specifications in § 90.312.

(v) The percent of oxygen interference must be less than three percent, as specified in § 90.316(d).

(5) *Oxides of nitrogen (NO_X)* analysis.

(i) This analysis device consists of the following items:

(A) A NO_2 to NO converter. The NO_2 to NO converter efficiency must be at least 90 percent.

(B) An ice bath located after the NO_X converter (optional).

(C) A chemiluminescent detector (CLD) or heated chemiluminescent detector (HCLD).

(ii) The quench interference must be less than 3.0 percent as measured in § 90.325.

(b) *Other analyzers and equipment.* Other types of analyzers and equipment may be used if shown to yield equivalent results and if approved in advance by the Administrator.

(c) The following requirements must be incorporated as indicated in systems used for testing under this subpart.

(1) Carbon monoxide and carbon dioxide measurements must be made on a dry basis (for raw exhaust measurement only). Specific requirements for the means of drying the sample can be found in § 90.313(e).

(2) Calibration or span gases for the NO_X measurement system must pass through the NO_2 to NO converter.

(d) The electromagnetic compatibility (EMC) of the equipment must be on a level as to minimize additional errors.

(e) *Gas drying.* Chemical dryers are not an acceptable method of removing water from the sample. Water removal by condensation is acceptable. If water is removed by condensation, the sample gas temperature or sample dew point must be monitored either within the water trap or downstream and its temperature must not exceed 7° C. A water trap performing this function is an acceptable method. Means other than condensation may be used only with prior approval from the Administrator.

§ 90.314 Analyzer accuracy and specifications.

(a) *Measurement and accuracy—general.* The analyzers must have a measuring range which allows them to measure the concentrations of the exhaust gas sample pollutants with the accuracies shown in Table 2 in Appendix A of this subpart.

(1) *Precision.* The precision of the analyzer must be, at worst, two percent of full-scale concentration for each range used. The precision is defined as 2.5 times the standard deviation(s) of 10 repetitive responses to a given calibration or span gas.

(2) *Noise.* The analyzer peak-to-peak response to zero and calibration or span gases over any 10-second period must not exceed two percent of full-scale chart deflection on all ranges used.

(3) *Zero drift.* The analyzer zero-response drift during a one-hour period must be less than two percent of full-scale chart deflection on the lowest range used. The zero-response is defined as the mean response including noise to a zero-gas during a 30-second time interval.

(4) *Span drift.* The analyzer span drift during a one-hour period must be less than two percent of full-scale chart deflection on the lowest range used. The analyzer span is defined as the difference between the span-response and the zero-response. The span-response is defined as the mean response including noise to a span gas during a 30-second time interval.

(b) *Operating procedure for analyzers and sampling system.* Follow the start-up and operating instructions of the instrument manufacturer or use good engineering practice. Adhere to the minimum requirements given in §§ 90.316 through 90.325 and § 90.409.

(c) *Emission measurement accuracy—Bag sampling.* (1) Good engineering practice dictates that exhaust emission sample analyzer readings below 15 percent of full-scale chart deflection should generally not be used.

(2) Some high resolution read-out systems, such as computers, data loggers, and so forth, can provide sufficient accuracy and resolution below 15 percent of full scale. Such systems may be used provided that additional calibrations are made to ensure the accuracy of the calibration curves. The following procedure for calibration below 15 percent of full scale may be used:

Note to paragraph (c): If a gas divider is used, the gas divider must conform to the accuracy requirements as follows. The use of precision blending devices (gas dividers) to obtain the required calibration gas concentrations is acceptable, provided that the blended gases are accurate to within ± 1.5 percent of NIST gas standards or other gas standards which have been approved by the Administrator. This accuracy implies that primary gases used for blending must be ''named'' to an accuracy of at least ± one percent, traceable to NIST or other approved gas standards.

(i) Span the full analyzer range using a top range calibration gas. The span gases must be accurate to within ± two percent of NIST gas standards or other gas standards which have been approved by the Administrator.

(ii) Generate a calibration curve according to, and meeting the requirements, of the sections describing analyzer calibrations which are found in §§ 90.316, 90.317, 90.318, and 90.320.

(iii) Select a calibration gas (a span gas may be used for calibrating the CO_2 analyzer) with a concentration between the two lowest non-zero gas divider increments. This gas must be ''named'' to an accuracy of ± one percent of NIST gas standards or other standards approved by the Administrator.

(iv) Using the calibration curve fitted to the points generated in paragraphs (c)(2) (i) and (ii) of this section, check the concentration of the gas selected in paragraph (c)(2)(iii) of this section. The concentration derived from the curve must be within ± 2.3 percent (± 2.8 percent for CO_2 span gas) of the gas's original named concentration.

(v) Provided the requirements of paragraph (c)(2)(iv) of this section are met, use the gas divider with the gas selected in paragraph (c)(2)(iii) of this section and determine the remainder of the calibration points. Fit a calibration curve per §§ 90.316, 90.317, 90.318, and 90.320 of this chapter for the entire analyzer range.

(d) *Emission measurement accuracy—continuous sampling.* Analyzers used for continuous analysis must be operated such that the measured concentration falls between 15 and 100 percent of full-scale chart deflection. Exceptions to these limits are:

(1) The analyzer's response may be less than 15 percent or more than 100 percent of full scale if automatic range change circuitry is used and the limits for range changes are between 15 and 100 percent of full-scale chart deflection;

(2) The analyzer's response may be less than 15 percent of full scale if:

(i) The alternative in paragraph (c)(2) of this section is used to ensure that the accuracy of the calibration curve is maintained below 15 percent; or

(ii) The full-scale value of the range is 155 ppm (C) or less; or

(iii) The emissions from the engine are erratic and the integrated chart deflection value for the cycle is greater than 15 percent of full scale; or

(iv) The contribution of all data read below the 15 percent level is less than 10 percent by mass of the final test results.

§ 90.315 Analyzer initial calibration.

(a) *Warming-up time.* The warming-up time should be according to the recommendations of the manufacturer. If not specified, a minimum of two hours should be allowed for warming up the analyzers.

(b) *NDIR, FID, and HFID analyzer.* Tune and maintain the NDIR analyzer per the instrument manufacturer recommendations or specifications or using good engineering practice. The combustion flame of the FID or HFID analyzer must be optimized in order to meet the specifications in § 90.316(b).

(c) *Zero setting and calibration.* Using purified synthetic air (or nitrogen), set the CO, CO_2, NO_X, and HC analyzers at zero. Connect the appropriate calibrating gases to the analyzers and record the values. Use the same gas flow rates and pressure as when sampling exhaust.

(d) *Rechecking of zero setting.* Recheck the zero setting and, if necessary, repeat the procedure described in paragraph (c) of this section.

§ 90.316 Hydrocarbon analyzer calibration.

(a) Calibrate the FID and HFID hydrocarbon analyzer as described in this section. Operate the HFID to a set point ± 5.5° C between 185 and 197° C.

(b) *Initial and periodic optimization of detector response.* Prior to initial use and at least annually thereafter, adjust the FID and HFID hydrocarbon analyzer for optimum hydrocarbon response as specified in this paragraph. Alternative methods yielding equivalent results may be used, if approved in advance by the Administrator.

(1) Follow good engineering practices for initial instrument start-up and basic operating adjustment using the appropriate fuel (see § 90.312) and purified synthetic air or zero-grade nitrogen.

(2) Use of one of the following procedures is required for FID or HFID optimization:

(i) The procedure outlined in Society of Automotive Engineers (SAE) paper No. 770141, ''Optimization of a Flame Ionization Detector for Determination of Hydrocarbon in Diluted Automotive Exhausts;'' author, Glenn D. Reschke. This procedure has been incorporated by reference. See § 90.7.

(ii) The HFID optimization procedures outlined in § 86.331–79 of this chapter.

(iii) Alternative procedures may be used if approved in advance by the Administrator.

(3) After the optimum flow rates have been determined, record them for future reference.

(c) *Initial and periodic calibration.* Prior to initial use and monthly thereafter, or within one month prior to the certification test, the FID or HFID hydrocarbon analyzer must be calibrated on all normally used instrument ranges using the steps in this paragraph. Use the same flow rate and pressures as when analyzing samples. Introduce calibration gases directly at the analyzer. An optional method for dilute sampling described in § 86.1310–90(b)(3)(i) may be used.

(1) Adjust analyzer to optimize performance.

(2) Zero the hydrocarbon analyzer with purified synthetic air or zero-grade nitrogen.

(3) Calibrate on each used operating range with calibration gases having nominal concentrations between 10 and 90 percent of that range. A minimum of six evenly spaced points covering at least 80 percent of the 10 to 90 range (64 percent) is required (see following table).

Example calibration points (%)	Acceptable for calibration?
20, 30, 40, 50, 60, 70	No, range covered is 50 percent, not 64.
20, 30, 40, 50, 60, 70, 80, 90	Yes.
10, 25, 40, 55, 70, 85	Yes.
10, 30, 50, 70, 90	No, though equally spaced and entire range covered, a minimum of six points are needed.

For each range calibrated, if the deviation from a least-squares best-fit straight line is two percent or less of the value at each data point, calculate concentration values by use of a single calibration factor for that range. If the deviation exceeds two percent at any point, use the best-fit non-linear equation which represents the data to within two percent of each test point to determine concentration.

(d) *Oxygen interference optimization.* Prior to initial use and monthly thereafter, perform the oxygen interference optimization as described in this paragraph. Choose a range where the oxygen interference check gases will fall in the upper 50 percent. Conduct the test, as outlined in this paragraph, with the oven temperature set as required by the instrument manufacturer. Oxygen interference check gas specifications are found in § 90.312(d).

(1) Zero the analyzer.

(2) Span the analyzer with the 21 percent oxygen blend.

(3) Recheck zero response. If it has changed more than 0.5 percent of full scale repeat paragraphs (d)(1) and (d)(2) of this section to correct the problem.

(4) Introduce the five percent and 10 percent oxygen interference check gases.

(5) Recheck the zero response. If it has changed by more than ± one percent of full scale, repeat the test.

(6) Calculate the percent of oxygen interference (designated as percent O_2I) for each mixture in paragraph (d)(4) of this section according to the following equation.

$$\text{Percent } O_2I = \frac{B - \text{Analyzer response (ppmC)}}{B}(100)$$

$$\text{Analyzer response} = \left(\frac{A}{\text{\% of full-scale analyzer response due to A}}\right) \times (\text{\% of full-scale analyzer response due to B})$$

Where:

A = hydrocarbon concentration (ppmC) of the span gas used in paragraph (d)(2) of this section.

B = hydrocarbon concentration (ppmC) of the oxygen interference check gases used in paragraph (d)(4) of this section.

(7) The percent of oxygen interference (designated as percent O_2I) must be less than ± three percent for all required oxygen interference check gases prior to testing.

(8) If the oxygen interference is greater than the specifications, incrementally adjust the air flow above and below the manufacturer's specifications, repeating paragraphs (d)(1) through (d)(7) of this section for each flow.

(9) If the oxygen interference is greater than the specification after adjusting the air flow, vary the fuel flow and thereafter the sample flow, repeating paragraphs (d)(1) through (d)(7) of this section for each new setting.

(10) If the oxygen interference is still greater than the specifications, repair or replace the analyzer, FID fuel, or burner air prior to testing. Repeat this section with the repaired or replaced equipment or gases.

§ 90.317 Carbon monoxide analyzer calibration.

(a) Calibrate the NDIR carbon monoxide analyzer as described in this section.

(b) *Initial and periodic interference.* Prior to its initial use and annually thereafter, check the NDIR carbon monoxide analyzer for response to water vapor and CO_2:

(1) Follow good engineering practices for instrument start-up and operation. Adjust the analyzer to optimize performance on the most sensitive range to be used.

(2) Zero the carbon monoxide analyzer with either purified synthetic air or zero-grade nitrogen.

(3) Bubble a mixture of three percent CO_2 in N_2 through water at room temperature and record analyzer response.

(4) An analyzer response of more than one percent of full scale for ranges above 300 ppm full scale or more than three ppm on ranges below 300 ppm full scale requires corrective action. (Use of conditioning columns is one form of corrective action which may be taken.)

(c) *Initial and periodic calibration.* Prior to its initial use and monthly thereafter, or within one month prior to the certification test, calibrate the NDIR carbon monoxide analyzer.

(1) Adjust the analyzer to optimize performance.

(2) Zero the carbon monoxide analyzer with either purified synthetic air or zero-grade nitrogen.

(3) Calibrate on each used operating range with carbon monoxide-in-N_2 calibration gases having nominal concentrations between 10 and 90 percent of that range. A minimum of six

evenly spaced points covering at least 80 percent of the 10 to 90 range (64 percent) is required (see following table).

Example calibration points (%)	Acceptable for calibration?
20, 30, 40, 50, 60, 70	No, range covered is 50 percent, not 64.
20, 30, 40, 50, 60, 70, 80, 90	Yes.
10, 25, 40, 55, 70, 85	Yes.
10, 30, 50, 70, 90	No, though equally spaced and entire range covered, a minimum of six points are needed.

Additional calibration points may be generated. For each range calibrated, if the deviation from a least-squares best-fit straight line is two percent or less of the value at each data point, calculate concentration values by use of a single calibration factor for that range. If the deviation exceeds two percent at any point, use the best-fit non-linear equation which represents the data to within two percent of each test point to determine concentration.

§ 90.318 Oxides of nitrogen analyzer calibration.

(a) Calibrate the chemiluminescent oxides of nitrogen analyzer as described in this section.

(b) *Initial and Periodic Interference*: Prior to its initial use and monthly thereafter, or within one month prior to the certification test, check the chemiluminescent oxides of nitrogen analyzer for NO_2 to NO converter efficiency. Figure 1 in Appendix B of this subpart is a reference for paragraphs (b)(1) through (11) of this section:

(1) Follow good engineering practices for instrument start-up and operation. Adjust the analyzer to optimize performance.

(2) Zero the oxides of nitrogen analyzer with purified synthetic air or zero-grade nitrogen.

(3) Connect the outlet of the NO_X generator to the sample inlet of the oxides of nitrogen analyzer which has been set to the most common operating range.

(4) Introduce into the NO_X generator analyzer-system an NO-in-nitrogen (N_2) mixture with an NO concentration equal to approximately 80 percent of the most common operating range. The NO_2 content of the gas mixture must be less than five percent of the NO concentration.

(5) With the oxides of nitrogen analyzer in the NO mode, record the concentration of NO indicated by the analyzer.

(6) Turn on the NO_X generator O_2 (or air) supply and adjust the O_2 (or air) flow rate so that the NO indicated by the analyzer is about 10 percent less than indicated in paragraph (b)(5) of this section. Record the concentration of NO in this NO+O_2 mixture as value ''c.''

(7) Switch the NO_X generator to the generation mode and adjust the generation rate so that the NO measured on the analyzer is 20 percent of that measured in paragraph (b)(5) of this section. There must be at least 10 percent unreacted NO at this point. Record the concentration of residual NO as value ''d.''

(8) Switch the oxides of nitrogen analyzer to the NO_X mode and measure total NO_X. Record this value as ''a.''

(9) Switch off the NO_X generator but maintain gas flow through the system. The oxides of nitrogen analyzer will indicate the NO_X in the NO+O_2 mixture. Record this value as ''b''.

(10) Turn off the NO_X generator O_2 (or air) supply. The analyzer will now indicate the NO_X in the original NO-in-N_2 mixture. This value should be no more than five percent above the value indicated in paragraph (b)(4) of this section.

(11) Calculate the efficiency of the NO_X converter by substituting the concentrations obtained into the following equation:

$$\text{percent efficiency} = \left(1 + \frac{a-b}{c-d}\right) \times 100$$

Where:

a = concentration obtained in paragraph (b)(8),

b = concentration obtained in paragraph (b)(9),

c = concentration obtained in paragraph (b)(6),

d = concentration obtained in paragraph (b)(7).

If converter efficiency is less than 90 percent, corrective action will be required.

(c) *Initial and periodic calibration*. Prior to its initial use and monthly thereafter, or within one month prior to the certification test, calibrate the chemiluminescent oxides of nitrogen analyzer on all normally used instrument ranges. Use the same flow rate as when analyzing samples. Proceed as follows:

(1) Adjust analyzer to optimize performance.

(2) Zero the oxides of nitrogen analyzer with purified synthetic air or zero-grade nitrogen.

(3) Calibrate on each normally used operating range with NO-in-N_2 calibration gases having nominal concentrations between 10 and 90 percent of that range. A minimum of six evenly spaced points covering at least 80 percent of the 10 to 90 range (64 percent) is required (see following table).

Example calibration points (%)	Acceptable for calibration?
20, 30, 40, 50, 60, 70	No, range covered is 50 percent, not 64
20, 30, 40, 50, 60, 70, 80, 90	Yes.
10, 25, 40, 55, 70, 85	Yes.
10, 30, 50, 70, 90	No, though equally spaced and entire range covered, a minimum of six points are needed.

Additional calibration points may be generated. For each range calibrated, if the deviation from a least-squares best-fit straight line is two percent or less of the value at each data point, calculate concentration values by use of a single calibration factor for that range. If the deviation exceeds two percent at any point, use the best-fit non-linear equation which represents the data to within two percent of each test point to determine concentration.

(d) The initial and periodic interference, system check, and calibration test procedures specified in

§ 86.332–79 of this chapter may be used in lieu of the procedures specified in this section.

§ 90.319 NO_X converter check.

(a) The efficiency of the converter used for the conversion of NO_2 to NO is tested as given in paragraphs (a)(1) through (a)(8) of this section.

(1) Using the test setup as shown in Figure 1 in Appendix B of this subpart (see also § 90.318 of this chapter) and the procedure described in paragraphs (a)(2) through (a)(8) of this section, test the efficiency of converters by means of an ozonator.

(2) Calibrate the HCLD or CLD in the most common operating range following the manufacturer's specifications using zero and span gas (the NO content of which must amount to about 80 percent of the operating range and the NO_2 concentration of the gas mixture less than five percent of the NO concentration). The NO_X analyzer must be in the NO mode so that the span gas does not pass through the converter. Record the indicated concentration.

(3) Calculate the efficiency of the NO_X converter as described in § 90.318(b).

(4) Via a T-fitting, add oxygen continuously to the gas flow until the concentration indicated is about 20 percent less than the indicated calibration concentration given in paragraph (a)(2) of this section. Record the indicated concentration ''c.'' The ozonator is kept deactivated throughout the process.

(5) Activate the ozonator to generate enough ozone to bring the NO concentration down to about 20 percent (minimum 10 percent) of the calibration concentration given in paragraph (a)(2) of this section. Record the indicated concentration ''d.''

Note: If, with the analyzer in the most common range, the NO_X converter can not give a reduction from 80 percent to 20 percent, then use the highest range which will give the reduction.

(6) Switch the NO analyzer to the NO_X mode which means that the gas mixture (consisting of NO, NO_2, O_2 and N_2) now passes through the converter. Record the indicated concentration ''a.''

(7) Deactivate the ozonator. The mixture of gases described in paragraph (a)(6) of this section passes through the converter into the detector. Record the indicated concentration ''b.''

(8) Switched to NO mode with the ozonator deactivated, the flow of oxygen or purified synthetic air is also shut off. The NO_X reading of the analyzer may not deviate by more than ± five percent of the theoretical value of the figure given in paragraph (a)(2) of this section.

(b) The efficiency of the converter must be tested prior to each calibration of the NO_X analyzer.

(c) The efficiency of the converter may not be less than 90 percent.

§ 90.320 Carbon dioxide analyzer calibration.

(a) Prior to its initial use and monthly thereafter, or within one month prior to the certification test, calibrate the NDIR carbon dioxide analyzer as follows:

(1) Follow good engineering practices for instrument start-up and operation. Adjust the analyzer to optimize performance.

(2) Zero the carbon dioxide analyzer with either purified synthetic air or zero-grade nitrogen.

(3) Calibrate on each normally used operating range with carbon dioxide-in-N_2 calibration or span gases having nominal concentrations between 10 and 90 percent of that range. A minimum of six evenly spaced points covering at least 80 percent of the 10 to 90 range (64 percent) is required (see following table).

Example calibration points (%)	Acceptable for Calibration?
20, 30, 40, 50, 60, 70	No, range covered is 50 percent, not 64.
20, 30, 40, 50, 60, 70, 80, 90	Yes.
10, 25, 40, 55, 70, 85	Yes.
10, 30, 50, 70, 90	No, though equally spaced and entire range covered, a minimum of six points are needed.

Additional calibration points may be generated. For each range calibrated, if the deviation from a least-squares best-fit straight line is two percent or less of the value at each data point, calculate concentration values by use of a single calibration factor for that range. If the deviation exceeds two percent at any point, use the best-fit non-linear equation which represents the data to within two percent of each test point to determine concentration.

(b) The initial and periodic interference, system check, and calibration test procedures specified in §§ 86.316, 86.319, 86.320, 86.321, and 86.322 of this chapter may be used in lieu of the procedures in this section.

§ 90.321 NDIR analyzer calibration.

(a) *Detector optimization.* If necessary, follow the instrument manufacturer's instructions for initial start-up and basic operating adjustments.

(b) *Calibration curve.* Develop a calibration curve for each range used as follows:

(1) Zero the analyzer.

(2) Span the analyzer to give a response of approximately 90 percent of full-scale chart deflection.

(3) Recheck the zero response. If it has changed more than 0.5 percent of full scale, repeat the steps given in paragraphs (b)(1) and (b)(2) of this section.

(4) Record the response of calibration gases having nominal concentrations between 10 and 90 percent of full-scale concentration. A minimum of six evenly spaced points covering at least 80 percent of the 10 to 90 range (64 percent) is required (see following table).

Example calibration points (%)	Acceptable for calibration?
20, 30, 40, 50, 60, 70	No, range covered is 50 percent, not 64.
20, 30, 40, 50, 60, 70, 80, 90	Yes.
10, 25, 40, 55, 70, 85	Yes.
10, 30, 50, 70, 90	No, though equally spaced and entire range covered, a minimum of six points are needed.

(5) Generate a calibration curve. The calibration curve must be of fourth order or less, have five or fewer coefficients, and be of the form of the following equation (1) or (2). Include zero as a data point. Compensation for known impurities in the zero gas can be made to the zero-data point. The calibration curve must fit the data points within two percent of point or one percent of full scale, whichever is less.

$$y = Ax^4 + Bx^3 + Cx^2 + Dx + E \quad (1)$$

$$y = \frac{x}{Ax^4 + Bx^3 + Cx^2 + Dx + E} \quad (2)$$

where:

y = concentration
x = chart deflection

(6) Option. A new calibration curve need not be generated if:

(i) A calibration curve conforming to paragraph (b)(5) of this section exists; or,

(ii) The responses generated in paragraph (b)(4) of this section are within one percent of full scale or two percent of point, whichever is less, of the responses predicted by the calibration curve for the gases used in paragraph (b)(4) of this section.

(7) If multiple range analyzers are used, the lowest range used must meet the curve fit requirements below 15 percent of full scale.

(c) *Linear calibration criteria.* If any range is within two percent of being linear, a linear calibration may be used. To determine if this criterion is met:

(1) Perform a linear least-square regression on the data generated. Use an equation of the form y=mx, where x is the actual chart deflection and y is the concentration.

(2) Use the equation z=y/m to find the linear chart deflection (designated as z) for each calibration gas concentration (designated as y).

(3) Determine the linearity (designated as percent L) for each calibration gas by:

$$\% L = \frac{(z - x)}{\text{Full-scale linear chart deflection}} \times (100)$$

(4) The linearity criterion is met if the %L is less than ± two percent for each data point generated. For each emission test, use a calibration curve of the form Y=mx. The slope (designated as m) is defined for each range by the spanning process.

§ 90.322 Calibration of other equipment.

Calibrate other test equipment used for testing as often as required by the test equipment manufacturer or as necessary according to good engineering practice.

§ 90.323 Analyzer bench checks.

(a) Prior to initial use and after major repairs, verify that each analyzer complies with the specifications given in Table 2 in Appendix A of this subpart.

(b) If a stainless steel NO_2 to NO converter is used, condition all new or replacement converters. The conditioning consists of either purging the converter with air for a minimum of four hours or until the converter efficiency is greater than 90 percent. The converter must be at operational temperature while purging. Do not use this procedure prior to checking converter efficiency on in-use converters.

§ 90.324 Analyzer leakage check.

(a) *Vacuum side leak check.* (1) Check any location within the analysis system where a vacuum leak could affect the test results.

(2) The maximum allowable leakage rate on the vacuum side is 0.5 percent of the in-use flow rate for the portion of the system being checked. The analyzer flows and bypass flows may be used to estimate the in-use flow rates.

(3) The sample probe and the connection between the sample probe and valve V2, see Figure 2 in Appendix B of this subpart, may be excluded from the leak check.

(b) *Pressure side leak check.* The maximum allowable leakage rate on the pressure side is five percent of the in-use flow rate.

§ 90.325 Analyzer interference checks.

(a) Gases present in the exhaust other than the one being analyzed can interfere with the reading in several ways. Positive interference occurs in NDIR and PMD instruments when the interfering gas gives the same effect as the gas being measured, but to a lesser degree. Negative interference occurs in NDIR instruments by the interfering gas broadening the absorption band of the measured gas, and in CLD instruments by the interfering gas quenching the radiation. The interference checks described in this section are to be made initially and after any major repairs that could affect analyzer performance.

(b) *CO analyzer water and CO_2 interference checks.* Bubble through water at room temperature a CO_2 span gas having a concentration of between 80 percent and 100 percent inclusive of full scale of the maximum operating range used during testing and record the analyzer response. For dry measurements, this mixture may be introduced into the sample system prior to the water trap. The analyzer response must not be more than one percent of full scale for ranges equal to or above 300 ppm or more than three ppm for ranges below 300 ppm.

(c) *NO^X* analyzer quench check. The two gases of concern for CLD (and HCLD) analyzers are CO_2 and water vapor. Quench responses to these two gases are proportional to their concentrations and, therefore, require test techniques to determine quench at the highest expected concentrations experienced during testing.

(1) *NO_X analyzer CO_2 quench check.* (i) Pass a CO_2 span gas having a concentration of 80 percent to 100 percent of full scale of the maximum operating range used during testing through the CO_2 NDIR analyzer and record the value ''a.''

(ii) Dilute the CO_2 span gas approximately 50 percent with NO span gas and pass through the CO_2 NDIR and CLD (or HCLD). Record the CO_2 and NO values as ''b'' and ''c'' respectively.

(iii) Shut off the CO_2 and pass only the NO span gas through the CLD (or HCLD). Record the NO value as ''d.''

(iv) Calculate the percent CO_2 quench as follows, not to exceed three percent:

$$\% CO_2 \text{ quench} = 100 \times \left(1 - \frac{(c \times a)}{(d \times a) - (d \times b)}\right) \times (a/b)$$

Where:

a=Undiluted CO_2 concentration (percent)

b=Diluted CO_2 concentration (percent)

c=Diluted NO concentration (ppm)

d=Undiluted NO concentration (ppm)

(2) *NO_X analyzer water quench check.* (i) This check applies to wet measurements only. An NO span gas having a concentration of 80 percent to 100 percent of full scale of a normal operating range is passed through the CLD (or HCLD) and the response recorded as ''D''. The NO span gas is then bubbled through water at room temperature and passed through the CLD (or HCLD) and the analyzer's response recorded as AR. Determine and record the analyzer's absolute operating pressure and the bubbler water temperature. (It is important that the NO span gas contains minimal NO_2 concentration for this check. No allowance for absorption of NO_2 in water has been made in the following quench calculations.)

(ii) Calculations for water quench must consider dilution of the NO span gas with water vapor and scaling of the water vapor concentration of the mixture to that expected during testing. Determine the mixture's saturated vapor pressure (designated as Pwb) that corresponds to the bubbler water temperature. Calculate the water concentration (''Z1'', percent) in the mixture by the following equation:

$$Z1 = 100 \times \frac{Pwb}{GP}$$

where GP is the analyzer's standard operating pressure (pascals).

(iii) Calculate the expected dilute NO span gas and water vapor mixture concentration (designated as D1) by the following equation:

$$D1 = D \times \left(1 - \frac{Z1}{100}\right)$$

§ 90.326 Pre- and post-test analyzer calibration.

Calibrate the range of each analyzer used during the engine exhaust emission test prior to and after each test in accordance with the following:

(a) Make the calibration by using a zero gas and a span gas. The span gas value must be between 75 percent and 100 percent of full scale, inclusive, of the measuring range.

(b) Use the same analyzer(s) flow rate and pressure as that used during exhaust emission test sampling.

(c) Warm-up and stabilize the analyzer(s) before the calibration is made.

(d) If necessary clean and/or replace filter elements before calibration is made.

(e) Calibrate analyzer(s) as follows:

(1) Zero the analyzer using the appropriate zero gas. Adjust analyzer zero if necessary. Zero reading should be stable.

(2) Span the analyzer using the appropriate span gas for the range being calibrated. Adjust the analyzer to the calibration set point if necessary.

(3) Re-check zero and span set points.

(4) If the response of the zero gas or span gas differs more than one percent of full scale, then repeat paragraphs (e)(1) through (3) of this section.

§ 90.327 Sampling system requirements.

(a) *Sample component surface temperature.* For sampling systems which use heated components, use engineering judgment to locate the coolest portion of each component (pump, sample line section, filters, and so forth) in the heated portion of the sampling system that has a separate source of power or heating element. Monitor the temperature at that location. If several components are within an oven, then only the surface temperature of the component with the largest thermal mass and the oven temperature need be measured.

(b) If water is removed by condensation, monitor the sample gas temperature or sample dew point either within the water trap or downstream. It may not exceed 7° C.

§ 90.328 Measurement equipment accuracy/calibration frequency table.

(a) The accuracy of measurements must be such that the maximum tolerances shown in Table 2 in Appendix A of this subpart are not exceeded.

(b) All equipment and analyzers must be calibrated according to the frequencies shown in Table 2 in Appendix A of this subpart.

(c) Prior to initial use and after major repairs, bench check each analyzer (see § 90.323).

(d) Calibrate equipment as specified in § 90.306 and §§ 90.315 through 90.322.

(e) At least monthly, or after any maintenance which could alter calibration, perform the following calibrations and checks.

(1) Leak check the vacuum side of the system (see § 90.324(a)).

(2) Verify that the automatic data collection system (if used) meets the requirements found in Table 2 in Appendix A of this subpart.

(3) Check the fuel flow measurement instrument to insure that the specifications in Table 2 in Appendix A of this subpart are met.

(f) Verify that all NDIR analyzers meet the water rejection ratio and the CO_2 rejection ratio as specified in § 90.325.

(g) Verify that the dynamometer test stand and power output instrumentation meet the specifications in Table 2 in Appendix A of this subpart.

§ 90.329 Catalyst thermal stress test.

(a) *Oven characteristics.* The oven used for thermally stressing the test catalyst must be capable of maintaining a temperature of 500° C ± 5° C and 1000° C ± 10° C.

(b) *Evaluation gas composition.* (1) A synthetic exhaust gas mixture is used for evaluating the effect of thermal stress on catalyst conversion efficiency.

(2) The synthetic exhaust gas mixture must have the following composition:

Constituent	Volume percent	Parts per million
Carbon Monoxide	1	.....
Oxygen	1.3	.....
Carbon Dioxide	3.8	.....
Water Vapor	10	.....
Sulfer dioxide	.....	20
Oxides of nitrogen	.....	280
Hydrogen	.....	3500
Hydrocarbon*	.....	4000

Constituent	Volume percent	Parts per million
Nitrogen = Balance		

*Propylene/propane ratio = 2/1.

Appendix A to Subpart D of Part 90—Tables

TABLE 1.—SYMBOLS USED IN SUBPART D

Symbol	Term	Unit
CO	Carbon monoxide.	
CO_2	Carbon dioxide.	
NO	Nitric oxide.	
NO_2	Nitrogen dioxide.	
NO_X	Oxides of nitrogen.	
O_2	Oxygen.	
conc	Concentration (ppm by volume)	ppm
f	Engine specific parameter considering atmospheric conditions.	
F_{FCB}	Fuel specific factor for the carbon balance calculation.	
F_{FD}	Fuel specific factor for exhaust flow calculation on dry basis.	
F_{FH}	Fuel specific factor representing the hydrogen to carbon ratio.	
F_{FW}	Fuel specific factor for exhaust flow calculation on wet basis.	
G_{AIRW}	Intake air mass flow rate on wet basis	kg/h
G_{AIRD}	Intake air mass flow rate on dry basis	kg/h
G_{EXHW}	Exhaust gas mass flow rate on wet basis	kg/h
G_{Fuel}	Fuel mass flow rate	kg/h
H	Absolute humidity (water content related to dry air)	gr/kg
i	Subscript denoting an individual mode.	
K_H	Humidity correction factor.	
L	Percent torque related to maximum torque for the test mode	percent
mass	Pollutant mass flow	g/h
$n_{d,i}$	Engine speed (average at the i'th mode during the cycle)	1/min
P_s	Dry atmospheric pressure	kPa
P_d	Test ambient saturation vapor pressure at ambient temperature	kPa
P	Gross power output uncorrected	kW
P_{AUX}	Declared total power absorbed by auxiliaries fitted for the test	kW
P_M	Maximum power measured at the test speed under test conditions	kW
P_i	$P_i = P_{M,i} + P_{AUX,\ i}$.	
P_B	Total barometric pressure (average of the pre-test and post-test values)	kPa
R_a	Relative humidity of the ambient air	percent
T	Absolute temperature at air inlet	C
T_{be}	Air temperature after the charge air cooler (if applicable) (average)	C
T_{clout}	Coolant temperature outlet (average)	C
T_{Dd}	Absolute dew point temperature	C
$T_{d,i}$	Torque (average at the i'th mode during the cycle)	N-m
T_{SC}	Temperature of the intercooled air	C
$T_{ref.}$	Reference temperature	C
V_{EXHD}	Exhaust gas volume flow rate on dry basis	m^3/h
V_{AIRW}	Intake air volume flow rate on wet basis	m^3/h
P_B	Total barometric pressure	kPa
V_{EXHW}	Exhaust gas volume flow rate on wet basis	m^3/h
WF	Weighing factor.	
WF_E	Effective weighing factor.	

TABLE 2.—MEASUREMENT CALIBRATION ACCURACY AND FREQUENCY

No.	Item	Permissible deviation from reading*		Calibration frequency
		Non-idle	Idle	
1	Engine speed	± 2 %	Same	Monthly or within one month prior to the certification test.
2	Torque	± 2 %		Monthly or within one month prior to the certification test.
3	Fuel consumption	± 2 %	±5%	Monthly or within one month prior to the certification test.
4	Air consumption	± 2 %	±5%	As required.
5	Coolant temperature	± 2° C	Same	As required.
6	Lubricant temperature	± 2° C	Same	As required.
7	Exhaust back pressure	± 5 %	Same	As required.
8	Inlet depression	± 5 %	Same	As required.
9	Exhaust gas temperature	± 15° C	Same	As required.
10	Air inlet temperature (combustion air).	± 2° C	Same	As required.
11	Atmospheric pressure	± 0.5 %	Same	As required.

TABLE 2.—MEASUREMENT CALIBRATION ACCURACY AND FREQUENCY—Continued

No.	Item	Permissible deviation from reading *		Calibration frequency
		Non-idle	Idle	
12	Humidity (combustion air) (relative).	± 3.0 %	Same	As required.
13	Fuel temperature	± 2° C	Same	As required.
14	Temperature with regard to dilution system.	± 2° C	Same	As required.
15	Dilution air humidity	± 3 % absolute	Same	As required.
16	HC analyzer	± 2 %**	Same	Monthly or within one month prior to the certification test.
17	CO analyzer	± 2 %**	Same	Monthly or within one month prior to the certification test.
18	NO_X analyzer	± 2 %**	Same	Monthly or within one month prior to the certification test.
19	NO_X converter check	90 %	Same	Monthly or within one month prior to the certification test.
20	CO_2 analyzer	± 2 %**	Same	Monthly or within one month prior to the certification test.

* All accuracy requirements pertain to the final recorded value which is inclusive of the data acquisition system.
** If reading is under 100 ppm then the accuracy shall be ± 2 ppm.

TABLE 3.—TEST FUEL SPECIFICATIONS

Item	Property	Tolerances	Procedure (ASTM) [1]
Sulfur, ppm max.	339		D 2622–92
Benzene, max. %	1.5		D 3606–92
RVP, psi	8.7	±0.2	D 5191–93a
Octane, R+M/2	87.3	±0.5	D 2699–92 D 2700–92
IBP, ° C	32.8	±11.0	D 86–93
10 % point, ° C	53.3	±5.5	D 86–93
50 % point, ° C	103.3	±5.5	D 86–93
90 % point, ° C	165.6	±5.5	D 86–93
End Point, max. ° C	212.8		D 86–93
Phosphorus, g/liter, max.	0.02		D 3231–89
Lead, g/liter, max.	0.02		
Manganese, g/liter, max.	0.004		
Aromatics, %	32.0	±4.0	D 1319–89
Olefins, %	9.2	±4.0	D 1319–89
Saturates, %	Remainder		D 1319–89

[1] All ASTM procedures in this table have been incorporated by reference. See § 90.7.

Appendix B to Subpart D—Figures

BILLING CODE 6560–50–P

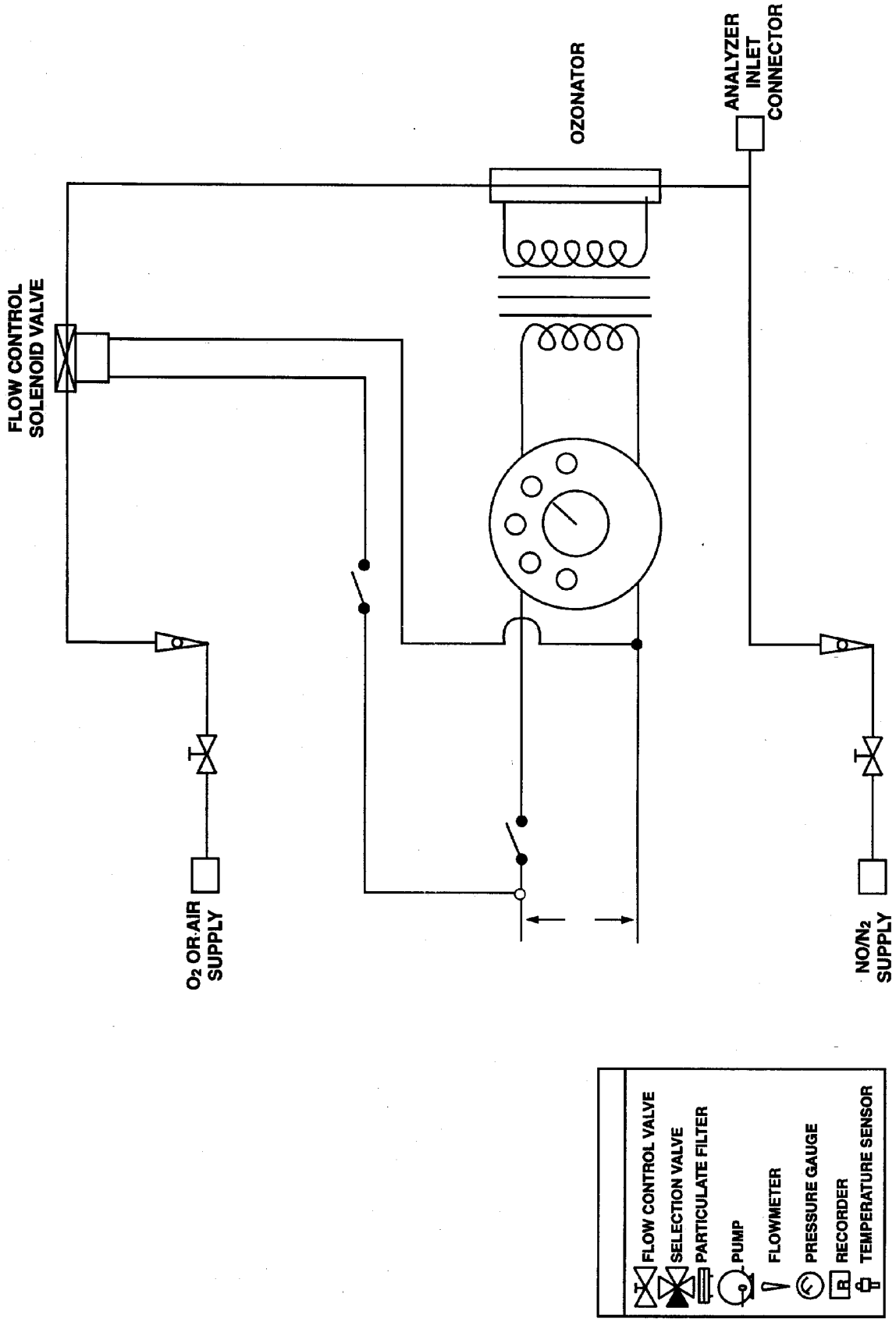

Figure 1. — NOx Converter Efficiency Detector

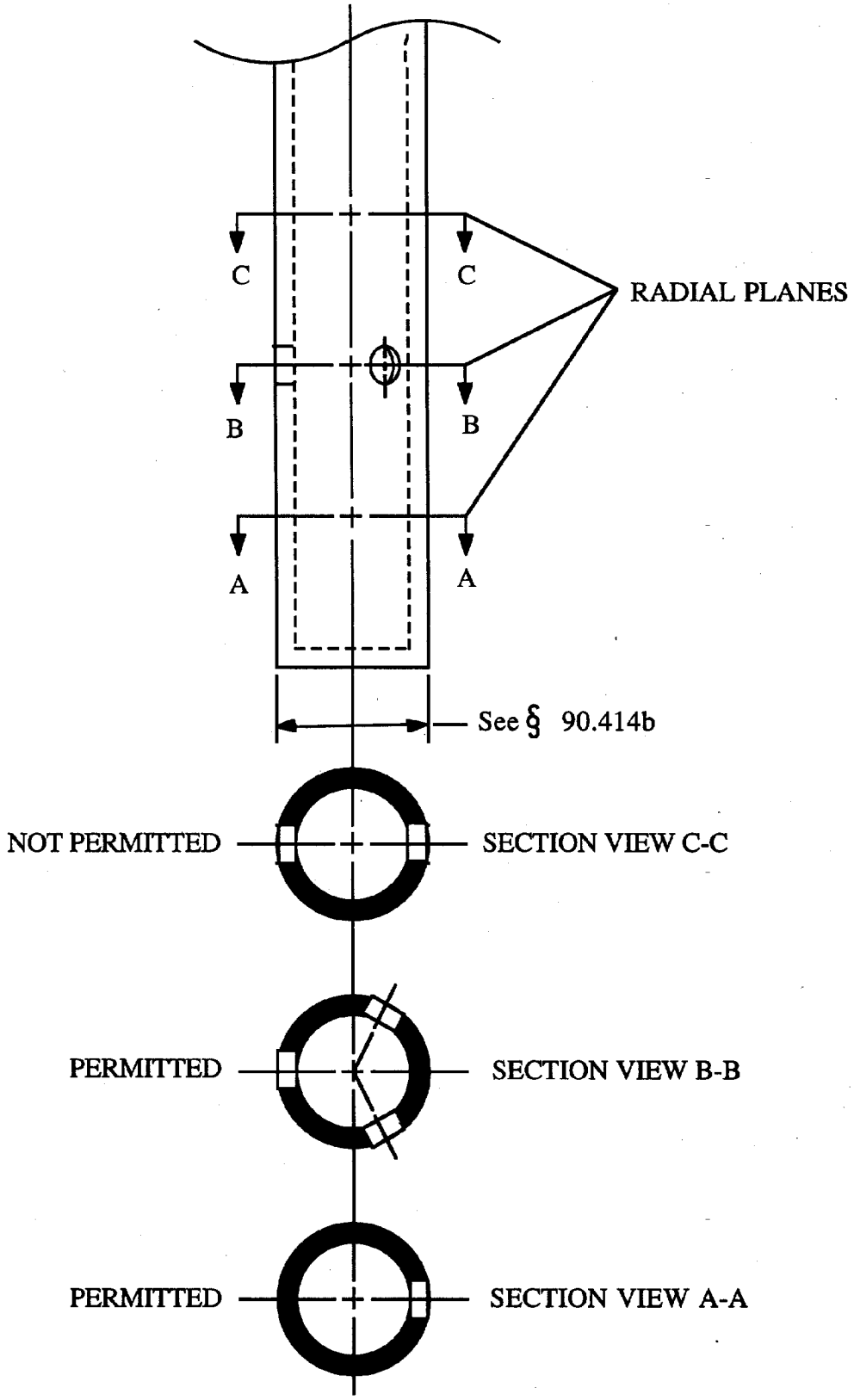

Figure 2.—Sample Probe and Typical Hole Spacings

BILLING CODE 6560–50–C

Subpart E—Gaseous Exhaust Test Procedures

§ 90.401 Applicability.

(a) This subpart describes the procedures to follow in order to perform exhaust emission tests on new nonroad spark-ignition engines and vehicles subject to the provisions of subpart A of part 90. Provisions specific to raw gas sampling are in § 90.414 through § 90.419, provisions specific to constant volume sampling are in § 90.420 through § 90.426. All other sections in this subpart apply to both raw gas sampling and constant volume sampling except where indicated otherwise.

(b) Requirements for emission test equipment and calibrating this equipment are found in subpart D of this part.

§ 90.402 Definitions.

The definitions in § 90.3, § 90.101, and § 90.302 apply to this subpart.

§ 90.403 Symbols, acronyms, and abbreviations.

(a) The acronyms and abbreviations in § 90.5 apply to this subpart.

(b) The symbols in Table 1 in Appendix A to Subpart D apply to this subpart.

§ 90.404 Test procedure overview.

(a) The test consists of prescribed sequences of engine operating conditions to be conducted on an engine dynamometer or equivalent load and speed measurement device. The exhaust gases generated during engine operation are sampled either raw or dilute and specific components are analyzed through the analytical system.

(b) The test is designed to determine the brake-specific emissions of hydrocarbons, carbon monoxide, carbon dioxide, and oxides of nitrogen and fuel consumption. The test consists of three different test cycles which are application specific for engines which span the typical operating range of nonroad spark-ignition engines. Two cycles exist for Class I and II engines and one is for Class III, IV, and V engines (see § 90.103(a) and § 90.116(b) for the definitions of Class I—V engines). The test cycles for Class I and II engines consist of one idle mode and five power modes at one speed (rated or intermediate). The test cycle for Class III, IV, and V engines consists of one idle mode at idle speed and one power mode at rated speed. These procedures require the determination of the concentration of each pollutant, fuel flow, and the power output during each mode. The measured values are weighted and used to calculate the grams of each pollutant emitted per brake kilowatt hour (g/kW-hr).

(c)(1) When an engine is tested for exhaust emissions the complete engine must be tested, with all emission control devices installed and functioning.

(2) On air cooled engines, the cooling fan must be installed. For engines whose cooling fan serves a dual purpose, such as an air pump/blower, an external fan may be used to provide the engine with cooling air and the original cooling fan may be removed.

(d) All emission control systems installed on or incorporated in the application must be functioning during all procedures in this subpart. In case of component malfunction or failure, no maintenance is allowed without prior approval from the Administrator, in accordance with § 90.119.

§ 90.405 Recorded information.

(a) Record the information described in this section for each test, where applicable.

(b) *Test data; general.* (1) Engine identification number.

(2) Engine emission control system.

(3) Test operator(s).

(4) Number of hours of operation accumulated on the engine prior to beginning the warm-up portion of the test (to the nearest tenth hour).

(5) Fuel identification.

(6) For 2-stroke engines, fuel/oil mixture ratio.

(7) Date of most recent analyzer bench calibration.

(8) All pertinent instrument information such as tuning, gain, serial numbers, detector number, and calibration curve(s). As long as this information is traceable, it may be summarized by system number or analyzer identification numbers.

(c) *Test data; pre-test.* (1) Date and time of day.

(2) Test number.

(3) Barometric pressure; as an option, barometric pressure can be measured as a modal measurement instead of or in addition to a pre- and post-test measurement.

(4) Recorder chart or equivalent. Identify for each test segment zero traces for each range used, and span traces for each range used.

(d) *Test data; modal.* (1) Recorder chart or equivalent. Identify for each test mode the emission concentration traces and the associated analyzer range(s).

(2) Observed engine torque.

(3) Observed engine rpm.

(4) Intake air flow if applicable.

(5) Test cell temperature and humidity for each mode.

(6) For raw gas testing; fuel flow for each mode. Fuel flow measurement is not required for dilute testing, but is allowed. If the fuel flow measurement is a volume measurement system, record the fuel temperature in the measurement system for fuel density corrections to the mass flow rate. If the fuel temperature is within 3° C of the calibration temperature, no density correction is required.

(7) Engine intake temperature and humidity, if applicable.

(8) Exhaust mixing chamber surface temperature, if applicable.

(9) Exhaust sample line temperature, if applicable.

(10) Engine fuel inlet pressure.

(e) *Test data; post-test.* (1) Recorder chart or equivalent. Identify the hang-up check.

(2) Recorder chart or equivalent. Identify the zero traces for each range used and the span traces for each range used.

(3) Total number of hours of operation accumulated on the engine (to the nearest tenth hour).

(4) Barometric pressure, post-test segment.

§ 90.406 Engine parameters to be measured and recorded.

Measure or calculate, then record the engine parameters in Table 1 in Appendix A of this subpart.

§ 90.407 Engine inlet and exhaust systems.

(a) The engine manufacturer is liable for exhaust emission compliance over the full range of air inlet filter systems and exhaust muffler systems.

(b) The air inlet filter system and exhaust muffler system combination used on the test engine must be the systems expected to yield the highest emission levels.

§ 90.408 Pre-test procedures.

(a) *Engine service accumulation and stabilization procedure.* Use the service accumulation procedure determined by the manufacturer for exhaust emission stabilizing of an engine, consistent with good engineering practice (see § 90.118).

(1) The manufacturer determines, for each engine family, the number of hours at which the engine exhaust emission control system combination is stabilized for emission testing. However, this stabilization procedure may not exceed 12 hours. The manufacturer must maintain, and provide to the Administrator upon request, a record of the rationale used in making this determination. If the manufactuer can document that at some time prior to the full 12 hour service accumulation period the engine emissions are decreasing for the remainder of the 12

hours, the service accumulation may be completed at that time. The manufacturer may elect to accumulate 12 hours on each test engine within an engine family without making this determination.

(2) During service accumulation, the fuel and lubricants specified in § 90.308 must be used.

(3) Engine maintenance during service accumulation is allowed only in accordance with § 90.118.

(b) *Engine pre-test preparation.* (1) Drain and charge the fuel tank(s) with the specified test fuel (see § 90.308(b)) to 50 percent of the tank's nominal capacity. If an external fuel tank is used, the engine fuel inlet system pressure must be typical of what the engine will see in use.

(2) Operate the engine on the dynamometer measuring the fuel consumption (fuel consumption required only for raw gas sampling method) and torque before and after the emission sampling equipment is installed, including the sample probe, using the modes specified in the following table.

Engine class	Test cycle	Operating mode
I, II	A	6
I, II	B	1
III, IV, V	C	1

These modes are from Table 2 in Appendix A of this subpart. The emission sampling equipment may not significantly affect the operational characteristics of the engine (typically the results should agree within five percent).

(c) *Analyzer pre-test procedures.* (1) If necessary, warm up and stabilize the analyzer(s) before calibrations are performed.

(2) Replace or clean the filter elements and then leak check the system as required by § 90.324(a). If necessary, allow the heated sample line, filters, and pumps to reach operating temperature.

(3) Perform the following system checks:

(i) If necessary, check the sample-line temperature. Heated FID sample line temperature must be maintained between 110° C and 230° C; a heated NO_X sample line temperature must be maintained between 60° C and 230° C.

(ii) Check that the system response time has been accounted for prior to sample collection data recording.

(iii) A HC hang-up check is permitted (see § 90.413(e)).

(4) Check analyzer zero and span before and after each test at a minimum. Further, check analyzer zero and span any time a range change is made or at the maximum demonstrated time span for stability for each analyzer used.

(d) Check system flow rates and pressures and reset, if necessary.

§ 90.409 Engine dynamometer test run.

(a) *Engine and dynamometer start-up.* (1) Only adjustments in accordance with § 90.119 may be made to the test engine prior to starting a test.

(2) If necessary, warm up the dynamometer as recommended by the dynamometer manufacturer or use good engineering practice.

(3) At the manufacturer's option, the engine can be run with the throttle in a fixed position or by using the engine's governor (if the engine is manufactured with a governor). In either case, the engine speed and load must meet the requirements specified in paragraph (b)(12) of this section.

(b) Each test consists of the following steps.

(1) Record the general test data as specified in § 90.405(b).

(2) Precondition the engine in the following manner;

(i) Operate the engine at a power greater than or equal to 50 percent maximum power at the appropriate speed (rated or intermediate) for 20 minutes;

(ii) Option. If the engine has been operating on service accumulation for a minimum of 40 minutes, the service accumulation may be substituted for step (i).

(3) Record all pre-test data specified in § 90.405(c).

(4) Start the test cycle (see § 90.410) within five minutes of the completion of the steps required by paragraph (b)(2) of this section.

(5) Modes are to be performed in the numerical order specified for the appropriate test cycle (see ''Mode Points'' Table 2 in Appendix A of this subpart).

(6) For Class I and II engines, during the maximum torque mode calculate the torque corresponding to 75, 50, 25, and 10 percent of the maximum observed torque (see Table 2 in Appendix A to this subpart).

(7) Once engine speed and load are set for a mode, run the engine for a sufficient period of time to achieve thermal stability. At the manufacturer's option, determine and document the appropriate criterion for thermal stability for each engine family. If the manufacture chooses not to make this determination, an acceptable alternative is to run the engine at each mode until the cylinder head temperature remains within a 10°C bandwidth for three minutes. Cylinder head temperature may be measured at the base of the spark plug. After stability is achieved, emission measurements are initiated.

(8) Record all modal data specified in § 90.405(d) for a minimum time period of the last two minutes of each mode. Longer averaging periods are acceptable, but the data averaged must be from a continuous time period. The duration of time during which this data is recorded is referred to as the ''sampling period.'' The data collected during the sampling period is used for modal emission calculations.

(9) Continuously record the analyzer's response to the exhaust gas during each mode.

(10) Modes may be repeated.

(11) If a delay of more than one hour occurs between the end of one mode and the beginning of another mode, the test is void and must be restarted at paragraph (b)(1) of this section.

(12) The engine speed and load must be maintained within the requirements of § 90.410 during the sampling period of each mode. If this requirement is not met, the mode is void and must be restarted.

(13) If at any time during a mode the test equipment malfunctions or the specifications in § 90.410 can not be met, the test is void and must be aborted. Corrective action should be taken and the test restarted.

(14) If at any time during an operating mode the engine stalls, restart the engine immediately and continue the test starting with the steps required by paragraph (b)(6) of this section. If the engine will not restart within five minutes the test is void. If maintenance is required on the engine, advance approval from the Administrator is required as specified in § 90.119. After corrective action is taken, the engine may be rescheduled for testing. Report the reason for the malfunction (if determined) and the corrective action taken.

(15) Fuel flow and air flow during the idle condition may be determined just prior to or immediately following the dynamometer sequence, if longer times are required for accurate measurements. If the dilute sampling method (Constant Volume Sampling) is used, neither fuel flow nor air flow measurements are required.

(c) *Exhaust gas measurements.* (1) Measure HC, CO, CO_2, and NO_X concentration in the exhaust sample.

(2) Each analyzer range that may be used during a test mode must have the zero and span responses recorded prior to the start of the test. Only the range(s) used to measure the emissions during the test is required to have its zero and

span recorded after the completion of the test. Depending on the stability of each individual analyzer, more frequent zero checks or spans between modes may be necessary.

(3) It is permitted to change filter elements between modes.

(4) A leak check is permitted between modes.

(5) A hang-up check is permitted between modes (see § 90.413).

(6) If, during the emission measurement portion of a mode, the value of the gauges downstream of the NDIR analyzer(s) G3 or G4 (see Figure 2 in Appendix B of Subpart D), differs by more than ±0.5kPa from the pretest value, the test mode is void.

§ 90.410 Engine test cycle.

(a) Follow the appropriate 6-mode test cycle for Class I and II engines and 2-mode test cycle for Class III, IV, and V engines when testing spark-ignition engines (see Table 2 in Appendix A of this subpart).

(b) During each non-idle mode, hold both the specified speed and load within ± five percent of point. During the idle mode, hold speed within ± ten percent of the manufacturer's specified idle engine speed.

(c) If the operating conditions specified in paragraph (b) of this section for Class I and II engines using Mode Points 2, 3, 4, and 5 cannot be maintained, the Administrator may authorize deviations from the specified load conditions. Such deviations may not exceed 10 percent of the maximum torque at the test speed. The minimum deviations, above and below the specified load, necessary for stable operation shall be determined by the manufacturer and approved by the Administrator prior to the test run.

(d) Do not include power generated during the idle mode, Mode 11, in the calculation of emission results.

§ 90.411 Post-test analyzer procedures.

(a) Perform a HC hang-up check within 60 seconds of the completion of the last mode in the test. Use the following procedure:

(1) Introduce a zero gas or room air into the sample probe or valve V2 (see Figure 2 in Appendix B of Subpart D) to check the ''hangup zero'' response. Simultaneously start a time measurement.

(2) Select the lowest HC range used during the test.

(3) Within four minutes of beginning the time measurement in paragraph (a)(1) of this section, the difference between the zero gas response and the hang-up zero response may not be greater than 5.0 percent of full scale or 10 ppmC, whichever is greater.

(b) Begin the analyzer span checks within six minutes after the completion of the last mode in the test. Record for each analyzer the zero and span response for each range used during the preceding test or test segment.

(c) If during the test, the filter element(s) were replaced or cleaned, a vacuum check must be performed per § 90.324(a) immediately after the span checks. If the vacuum side leak check does not meet the requirements of § 90.324(a), the test is void.

(d) Read and record the post-test data specified in § 90.405(e).

(e) For a valid test, the analyzer drift between the before-segment and after-segment span checks for each analyzer must meet the following requirements:

(1) The span drift (defined as the change in the difference between the zero response and the span response) may not exceed two percent of full-scale chart deflection for each range used.

(2) The zero response drift may not exceed two percent of full-scale chart deflection for each range used above 155 ppm (or ppm C), or three percent of full-scale chart deflection for each range below 155 ppm (or ppm C).

§ 90.412 Data logging.

(a) A computer or any other automatic data collection (ADC) device(s) may be used as long as the system meets the requirements of this subpart.

(b) Determine from the data collection records the analyzer responses corresponding to the end of each mode.

(c) Record data at a minimum of rate of one Hz (one time per second).

(d) Determine the final value for power by averaging the individually calculated power points for each value of speed and torque recorded during the sampling period. As an alternative, the final value for power can be calculated from the average values for speed and torque, collected during the sampling period.

(e) Determine the final value for CO_2, CO, HC, and NO_X concentrations by averaging the concentration of each point taken during the sample period for each mode.

§ 90.413 Exhaust sample procedure—gaseous components.

(a) *Automatic data collection equipment requirements.* The analyzer response may be read by automatic data collection (ADC) equipment such as computers, data loggers, and so forth. If ADC equipment is used, the following is required:

(1) For dilute grab (''bag'') sample analysis, the analyzer response must be stable at greater than 99 percent of the final reading for the dilute exhaust sample. The ADC must store a single value representing the average chart deflection over a 10-second stabilized period. Alternatively, the ADC may store the individual instantaneous chart deflections collected over a 10-second stabilized period.

(2) For continuous analysis systems, the ADC must store a single value representing the average integrated concentration over a measurement period. Alternatively, the ADC may store the individual instantaneous values collected during the measurement period.

(3) The chart deflections or average integrated concentrations required in paragraphs (a)(1) and (a)(2) of this section may be stored on long-term computer storage devices such as computer tapes, storage discs, punch cards, or they may be printed in a listing for storage. In either case a chart recorder is not required and records from a chart recorder, if they exist, need not be stored.

(4) If ADC equipment is used to interpret analyzer values, the ADC equipment is subject to the calibration specifications of the analyzer as if the ADC equipment is part of analyzer system.

(b) Data records from any one or a combination of analyzers may be stored as chart recorder records.

(c) *Grab sample analysis.* For dilute grab sample analysis perform the following procedure:

(1) Calibrate analyzers using the procedure described in § 90.326.

(2) Record the most recent zero and span response as the pre-analysis values.

(3) Measure and record HC, CO, CO_2, and NO_X concentrations in the exhaust sample bag(s) and background sample bag(s) using the same flow rates and pressures.

(4) Good engineering practice dictates that exhaust emission sample bag analyzer readings below 15 percent of full scale should generally not be used.

(5) A post-analysis zero and span calibration check of each range must be performed and the values recorded. The number of events that may occur between the pre- and post-checks is not specified. However, the difference between pre-analysis zero and span values (recorded in paragraph (c)(2) or (c)(3) of this section) versus those recorded for the post-analysis check may not exceed the zero drift limit or the span drift limit of two percent of full-scale chart deflection for any range used. Otherwise the analysis is void.

(d) *Continuous sample analysis.* For continuous sample analysis perform the following procedure:

(1) Calibrate analyzers using the procedure described in § 90.326.

(2) Leak check portions of the sampling system that operate at negative gauge pressures when sampling and allow heated sample lines, filters, pumps, and so forth to stabilize at operating temperature.

(3) Option: Determine the HC hang-up for the FID or HFID sampling system:

(i) Zero the analyzer using zero gas introduced at the analyzer port.

(ii) Flow zero gas through the overflow sampling system. Check the analyzer response.

(iii) If the overflow zero response exceeds the analyzer zero response by two percent or more of the FID or HFID full-scale deflection, hang-up is indicated and corrective action must be taken (see paragraph (e) of this section).

(iv) The complete system hang-up check specified in paragraph (e) of this section is recommended as a periodic check.

(4) If necessary, recalibrate analyzer using the procedure specified in paragraph (d)(1) of this section.

(5) Good engineering practice dictates that analyzers used for continuous analysis should be operated such that the measured concentration falls between 15 percent and 100 percent of full scale.

(6) Record the most recent zero and span response as the pre-analysis values.

(7) Collect background HC, CO, CO_2, and NO_X in a sample bag (for dilute exhaust sampling only, see § 90.422).

(8) Perform a post-analysis zero and span check for each range used at the conditions specified in paragraph (d)(1) of this section. Record these responses as the post-analysis values.

(9) Neither the zero drift nor the span drift between the pre-analysis and post-analysis checks on any range used may exceed three percent for HC, or two percent for NO_X, CO, and CO_2, of full-scale chart deflection, or the test is void. (If the HC drift is greater than three percent of full-scale chart deflection, HC hang-up is likely.)

(10) Determine background levels of HC, NO_X, CO, or CO_2 (for dilute exhaust sampling only) by the grab (''bag'') technique outlined in paragraph (c) of this section.

(e) *Hydrocarbon hang-up*. If HC hang-up is indicated, the following procedure may be performed:

(1) Fill a clean, evacuated sample bag with background air.

(2) Zero and span the HFID at the analyzer ports.

(3) Analyze the background air sample bag through the analyzer ports.

(4) Analyze the background air through the entire sample probe system.

(5) If the difference between the readings obtained is two ppm or more, clean the sample probe and the sample line.

(6) Reassemble the sample system, heat to specified temperature, and repeat the procedure in paragraphs (e)(1) through (e)(5) of this section.

§ 90.414 Raw gaseous exhaust sampling and analytical system description.

(a) *Schematic drawing.* An example of a sampling and analytical system which may be used for testing under this subpart is shown in Figure 2 in Appendix B of Subpart D. All components or parts of components that are wetted by the sample or corrosive calibration gases must be either chemically cleaned stainless steel or inert material (e.g., polytetrafluoroethylene resin). The use of ''gauge savers'' or ''protectors'' with nonreactive diaphragms to reduce dead volumes is permitted.

(b) *Sample probe.* (1) The sample probe must be a straight, closed end, stainless steel, multi-hole probe. The inside diameter may not be greater than the inside diameter of the sample line +0.03 cm. The wall thickness of the probe may not be greater than 0.10 cm. The fitting that attaches the probe to the exhaust pipe must be as small as practical in order to minimize heat loss from the probe.

(2) The probe must have a minimum of three holes. The spacing of the radial planes for each hole in the probe must be such that they cover approximately equal cross-sectional areas of the exhaust duct. See Figure 2 in Appendix B of Subpart D. The angular spacing of the holes must be approximately equal. The angular spacing of any two holes in one plane may not be 180° ± 20° (i.e., section view C–C of Figure 2 in Appendix B of Subpart D). The holes should be sized such that each has approximately the same flow. If only three holes are used, they may not all be in the same radial plane.

(3) The exhaust gas probe must be located in a position which yields a well mixed, homogenous sample of the engine exhaust. The probe must extend radially across the exhaust gas stream. The probe must pass through the approximate center and must extend across at least 80 percent of the exhaust gas stream. The exact position of the probe may vary from engine family to engine family.

(c) *Mixing chamber.* The exhaust mixing chamber is located in the exhaust system between the muffler and the sample probe. The mixing chamber is an optional component of the raw gas sampling equipment.

(1) The internal volume of the mixing chamber may not be less than ten times the cylinder displacement of the engine under test. The shape of the mixing chamber must be such that it provides a well mixed, homogenous sample at the sample probe location.

(2) Couple the mixing chamber as closely as possible to the engine muffler.

(3) Maintain the inner surface of the mixing chamber at a minimum temperature of 179° C.

(4) Thermocouple temperature monitoring of the mixing chamber inner surface is required to assure wall temperatures specified in paragraph (c)(3) of this section. The temperature measurement must be accurate to within ± 5° C.

(5) The sample probe must extend radially across the exit of the mixing chamber. The probe must pass through the approximate center and must extend across at least 80 percent of the diameter of the exit. The exact position of the probe may vary from engine family to engine family. The probe must be located in a position which yields a well mixed, homogenous sample of the exhaust.

(d) *Sample transfer line.* (1) The maximum inside diameter of the sample line may not exceed 1.32 cm.

(2) If valve V2 in Figure 1 of Appendix B of this subpart is used, the sample probe must connect directly to valve V2. The location of optional valve V2 in Figure 1 of Appendix B of Subpart D may not be greater than 1.22 m from the exhaust duct.

(3) The location of optional valve V16, Figure 1 of Appendix B of this subpart, may not be greater than 61 cm from the sample pump. The leakage rate for this section on the pressure side of the sample pump may not exceed the leakage rate specification for the vacuum side of the pump.

(e) *Venting.* All vents, including analyzer vents, bypass flow, and pressure relief vents, of regulators should be vented in such a manner as to avoid endangering personnel in the immediate area.

(f) Any variation from the specifications in this subpart, including performance specifications and emission detection methods, may be used only with prior approval by the Administrator.

(g) Additional components, such as instruments, valves, solenoids, pumps, switches, and so forth, may be employed to provide additional information and coordinate the functions of the component systems.

(h) The following requirements must be incorporated in each system used for raw testing under this subpart.

(1) Take the sample for all components with one sample probe and split it internally to the different analyzers.

(2) Heat the sample transport system from the engine exhaust pipe to the HC analyzer for the raw gas sampling method as indicated in Figure 1 in Appendix B of this subpart. The NO_X analyzer for the raw gas sampling method may be heated as indicated in Figure 1 in Appendix B of this subpart. The HC analyzer and the NO_X analyzer for the dilute sampling method may be heated as indicated in Figure 1 in Appendix B of this subpart.

§ 90.415 Raw gaseous sampling procedures.

Fit all heated sampling lines with a heated filter to extract solid particles from the flow of gas required for analysis. The sample line for HC measurement must be heated. The sample line for CO, CO_2 and NO_X analysis may be heated or unheated.

§ 90.416 Intake air flow measurement specifications.

(a) If used, the engine intake air flow measurement method used must have a range large enough to accurately measure the air flow over the engine operating range during the test. Overall measurement accuracy must be two percent of full-scale value of the measurement device for all modes except the idle mode. For the idle mode, the measurement accuracy must be ± five percent or less of the full-scale value. The Administrator must be advised of the method used prior to testing.

(b) When an engine system incorporates devices that affect the air flow measurement (such as air bleeds, air injection, pulsed air, and so forth) resulting in understated exhaust emission results, make corrections to the exhaust emission results to account for such effects.

§ 90.417 Fuel flow measurement specifications.

(a) Fuel flow measurement is required only for raw testing. Fuel flow is allowed for dilute testing. If the measured fuel flow is used in the dilute calculations for brake-specific fuel consumption (see § 90.426(e)), the fuel flow instrument must meet the requirements of this section.

(b) The fuel flow measurement instrument must have a minimum accuracy of one percent of full-scale flow rate for each measurement range used. An exception is allowed for the idle mode. For this mode, the minimum accuracy is ± five percent of full-scale flow rate for the measurement range used. The controlling parameters are the elapsed time measurement of the event and the weight or volume measurement.

§ 90.418 Data evaluation for gaseous emissions.

For the evaluation of the gaseous emissions recording, record the last four minutes of each mode and determine the average values for HC, CO, CO_2 and NO_X during each mode from the average concentration readings determined from the corresponding calibration data. Longer averaging times are acceptable, but the sampling period which is reported must be a continuous set of data.

§ 90.419 Raw emission sampling calculations—gasoline fueled engines.

(a) Derive the final weighted brake-specific mass emission rates (g/kW–hr) through the steps described in this section.

(b) *Air and fuel flow method.* If both air and fuel flow mass rates are measured, use the following equations to determine the weighted emission values for the test engine:

$$W_{NO_X} = \left(G_{AIRD} + G_{FUEL}\right) \times \frac{M_{NO_2}}{M_{exh}} \times WNO_X \times K_H \times \frac{1}{10^6}$$

$$W_{HC} = \left(G_{AIRD} + G_{FUEL}\right) \times \frac{M_{HC_{exh}}}{M_{exh}} \times WHC \times \frac{1}{10^6}$$

$$W_{CO} = \left(G_{AIRD} + G_{FUEL}\right) \times \frac{M_{CO}}{M_{exh}} \times WCO \times \frac{1}{10^2}$$

Where:

W_{HC}=Mass rate of HC in exhaust [g/hr],

G_{AIRD}=Intake air mass flow rate on dry basis [g/hr],

G_{FUEL}=Fuel mass flow rate [g/hr],

M_{HCexh}=Molecular weight of hydrocarbons in the exhaust, see the following equation:

$$M_{HC_{exh}} = 12.01 + \alpha 1.008 + \beta 16.00$$

Where:

α=Hydrogen/carbon atomic ratio of the fuel

β=Oxygen/carbon atomic ratio of the fuel

M_{exh}=Molecular weight of the total exhaust, see the following equation:

$$M_{exh} = \frac{M_{HC_{exh}} \times WHC}{10^6} + \frac{28.01 \times WCO}{10^2} + \frac{44.01 \times WCO_2}{10^2} + \frac{46.01 \times WNO_X}{10^6} + \frac{32.00 \times WO_2}{10^2} + \frac{2.016 \times WH_2}{10^2} + 18.01 \times (1 - K) + \frac{28.01 \times \left[100 - \frac{WHC}{10^4} - WCO - WCO_2 - \frac{WNO_X}{10^4} - WO_2 - WH_2 - 100 \times (1 - K)\right]}{10^2}$$

Where:

WHC=HC volume concentration in exhaust, ppmC wet

WCO=CO percent concentration in the exhaust, wet

DCO=CO percent concentration in the exhaust, dry

WCO_2=CO_2 percent concentration in the exhaust, wet

DCO_2=CO_2 percent concentration in the exhaust, dry

WNO_X=NO volume concentration in exhaust, ppm wet

WO_2=O_2 percent concentration in the exhaust, wet

WH_2=H_2 percent concentration in exhaust, wet

K=correction factor to be used when converting dry measurements to a wet basis. Therefore, wet concentration=dry concentration × K,

where K is:

$$K = \frac{1}{1 + 0.005 \times (DCO + DCO_2) \times \alpha - 0.01 DH_2}$$

DH_2=H_2 percent concentration in exhaust, dry, calculated from the following equation:

$$DH_2 = \frac{0.5 \times \alpha \times DCO \times (DCO + DCO_2)}{DCO + (3 \times DCO_2)}$$

W_{co}=Mass rate of CO in exhaust, [g/hr]

M_{co}=Molecular weight of CO=28.01

W_{NOx}=Mass rate of NO_X in exhaust, [g/hr]

M_{NO2}=Molecular weight of NO_2=46.01

K_H=Factor for correcting the effects of humidity on NO_2 formation for 4-stroke gasoline small engines, see the equation below :

$$K_H = \frac{1}{1 - 0.0329(H - 10.71)}$$

Where:

H=absolute humidity of the intake air in grams of moisture per kilogram of dry air, see § 90.426(f) for a method by which H can be calculated.

For two-stroke gasoline engines, K_H should be set to 1.

(c) *Fuel flow method*. The following equations are to be used when fuel flow is selected as the basis for mass emission calculations using the raw gas method.

$$W_{HC} = \frac{M_{HC_{exh}}}{M_F} \times \frac{G_{FUEL}}{TC} \times \frac{WHC}{10^4}$$

$$W_{CO} = \frac{M_{CO}}{M_F} \times \frac{G_{FUEL}}{TC} \times WCO$$

$$W_{NO_X} = \frac{M_{NO_X}}{M_F} \times \frac{G_{FUEL}}{TC} \times \frac{WNO_X}{10^4} \times K_H$$

Where:

W_{HC}=Mass rate of HC in exhaust, [g/hr]

$M_{HC\ exh}$=Molecular weight of hydrocarbons in the exhaust, see following equation:

$$M_{HC_{exh}} = M_C + \alpha M_H + \beta M_O$$

M_C=Molecular weight of carbon=12.01 [g/mole]

M_H=Molecular weight of hydrogen=1.008 [g/mole]

M_O=Molecular weight of oxygen=16.00 [g/mole]

α=Hydrogen to carbon ratio of the test fuel

β=Oxygen to carbon ratio of the test fuel

M_F=Molecular weight of test fuel

G_{FUEL}=Fuel mass flow rate, [g/hr]

TC=Total carbon in exhaust, see following equation:

$$TC = WCO + WCO_2 + \frac{WHC}{10^4}$$

WCO=CO percent concentration in the exhaust, wet

WCO_2=CO_2 percent concentration in the exhaust, wet

DCO=CO percent concentration in the exhaust, dry

DCO_2=CO_2 percent concentration in the exhaust, dry

WHC=HC volume concentration in exhaust, ppmC wet

WNO_X=NO_X volume concentration in exhaust, ppm wet

K=correction factor to be used when converting dry measurements to a wet basis. Therefore, wet concentration=dry concentration x K, where K is:

$$K = \frac{1}{1 + 0.005 \times (DCO + DCO_2) \times \alpha - 0.01\, DH_2}$$

DH_2=H_2 percent concentration in exhaust, dry, calculated from the following equation:

$$DH_2 = \frac{0.5 \times \alpha \times DCO \times (DCO + DCO_2)}{DCO + (3 \times DCO_2)}$$

W_{CO}=Mass rate of CO in exhaust, [g/hr]

M_{CO}=Molecular weight of CO=28.01

WNO_X=Mass rate of NO_X in exhaust, [g/hr]

MNO_2=Molecular weight of NO_2=46.01

K_H=Factor for correcting the effects of humidity on NO_2 formation for 4-stroke gasoline small engines, see the following equation:

$$K_H = \frac{1}{1 - 0.0329(H - 10.71)}$$

Where:

H=specific humidity of the intake air in grams of moisture per kilogram of dry air.

For two-stroke gasoline engines, K_H should be set to 1.

(d) Calculate the final weighted brake-specific emission rate for each individual gas component using the following equation:

$$A_{WM} = \frac{\sum_i^n (W_i \times WF_i)}{\sum_i^n (P_i \times WF_i)}$$

Where:

A_{WM}=Final weighted brake-specific mass emission rate (HC, CO, NO_X) [g/kW-hr]

W_i=Mass emission rate during mode i [g/hr]

WF_i=Weighting factors for each mode according to § 90.410(a)

P_i=Gross average power generated during mode i [kW], calculated from the following equation,

$$P_i \frac{2\pi}{60{,}000} \times \text{speed} \times \text{torque}$$

Where:

speed=average engine speed measured during mode i [rev./minute]

torque=average engine torque measured during mode i [N-m] (e) Compute the final reported brake-specific fuel

$$BSFC = \frac{\sum_{i}^{n} \left(G_{FUEL_i} \times WF_i\right)}{\sum_{i}^{n} \left(P_i \times F_i\right)}$$

consumption (BSFC) by use of the following formula:

Where:

BSFC=brake-specific fuel consumption in grams of fuel per kilowatt-hour (g/kW-hr).

$G_{FUEL\ i}$=Fuel mass flow rate of the engine during mode i [g/hr]

WF_i=Weighting factors for each mode according to § 90.410(a)

P_i=Gross average power generated during mode i [kW].

§ 90.420 CVS concept of exhaust gas sampling system.

(a) A dilute exhaust sampling system is designed to directly measure the true mass of emissions in engine exhaust without the necessity of measuring either fuel flow or intake air flow. This is accomplished by diluting the exhaust produced by a test engine with ambient background air and measuring the total diluted exhaust flow rate and the concentration of emissions within the dilute flow. Total mass flow of an emission is then easily calculated.

(b) A constant volume sampler (CVS) is typically used to control the total amount of dilute flow through the system. As the name implies, a CVS restricts flow to a known value dependent only on the dilute exhaust temperature and pressure.

(c) For the testing described in this subpart, a CVS must consist of: a mixing tunnel into which the engine exhaust and dilutant (background) air are dumped; a dilute exhaust flow metering system; a dilute exhaust sample port; a background sample port; a dilute exhaust sampling system; and a background sampling system.

(1) *Mixing tunnel.* The mixing tunnel must be constructed such that complete mixing of the engine exhaust and background air is assured prior to the sampling probe.

(2) *Exhaust flow metering system.* A dilute exhaust flow metering system must be used to control the total flow rate of the dilute engine exhaust as described in § 90.421.

(3) *Exhaust sample port.* A dilute exhaust sample port must be located in or downstream of the mixing tunnel at a point where complete mixing of the engine exhaust and background air is assured.

(4) *Background sample port.* A dilute exhaust sample port must be located in the stream of background air before it is mixed with the engine exhaust. The background probe must draw a representative sample of the background air during each sampling mode.

(5) *Exhaust sampling system.* The dilute exhaust sampling system controls the flow of samples from the mixing tunnel to the analyzer system. This could be either a continuous sampling system or grab (bag) sampling system. If a critical flow venturi (CFV) is used on the dilute exhaust sample probe, this system must assure that the sample CFV is in choke flow during testing. If no CFV is used, this system must assure a constant volumetric flow rate through the dilute exhaust sample probe or must incorporate electronic flow compensation.

(6) *Background sampling system.* The background sampling system controls the flow of samples from the background air supply to the analyzer system. This could be either a continuous sampling system or grab (bag) sampling system. This system must assure a constant volumetric flow rate through the background sample probe.

§ 90.421 Dilute gaseous exhaust sampling and analytical system description.

(a) *General.* The exhaust gas sampling system described in this section is designed to measure the true mass of gaseous emissions in the exhaust of nonroad small spark-ignition engines. This system utilizes the Constant Volume Sampling (CVS) concept (described in § 90.420) of measuring mass emissions of HC, NO_X, CO, and CO_2. Grab sampling for individual modes is an acceptable method of dilute testing for all constituents, HC, NO_X, CO, and CO_2. Continuous dilute sampling is not required for any of the exhaust constituents, but is allowable for all. Heated sampling is not required for any of the constituents, but is allowable for HC and NO_X. The mass of gaseous emissions is determined from the sample concentration and total flow over the test period. As an option, the measurement of total fuel mass consumed over a cycle may be substituted for the exhaust measurement of CO_2. General requirements are as follows:

(1) This sampling system requires the use of a Positive Displacement Pump—Constant Volume Sampler (PDP–CVS) system with a heat exchanger, or a Critical Flow Venturi—Constant Volume Sampler (CFV–CVS) system with CFV sample probes and/or a heat exchanger or electronic flow compensation. Figure 2 in Appendix B of this subpart is a schematic drawing of the PDP–CVS system. Figure 3 in Appendix B of this subpart is a schematic drawing of the CFV–CVS system.

(2) The HC analytical system requires:

(i) Grab sampling (see § 90.420, and Figure 2 or Figure 3 in Appendix B of this subpart) and analytical capabilities (see § 90.423, and Figure 4 in Appendix B of this subpart), or

(ii) Continuously integrated measurement of diluted HC meeting the minimum requirements and technical specifications contained in paragraph (b)(2) of this section.

(iii) The dilute HC analytical system for nonroad small spark-ignition engines does not require a heated flame ionization detector (HFID).

(iv) If used, the HFID sample must be taken directly from the diluted exhaust stream through a heated probe and integrated continuously over the test cycle.

(v) The heated probe must be located in the sampling system far enough downstream of the mixing area to ensure a uniform sample distribution across the CVS duct at the sampling zone.

(3) The CO and CO_2 analytical system requires:

(i) Grab sampling (see § 90.420, and Figure 2 or Figure 3 in Appendix B of this subpart) and analytical capabilities (see § 90.423, and Figure 4 in Appendix B of this subpart), or

(ii) Continuously integrated measurement of diluted CO and CO_2 meeting the minimum requirements and technical specifications contained in paragraph (b)(4) of this section.

(4) The NO_X analytical system requires:

(i) Grab sampling (see § 90.420, and Figure 2 or Figure 3 in Appendix B of this subpart) and analytical capabilities (see § 90.423, and Figure 4 in Appendix B of this subpart), or

(ii) A continuously integrated measurement of diluted NO_X meeting the minimum requirements and technical specifications contained in paragraph (b)(4) of this section.

(5) Since various configurations can produce equivalent results, exact conformance with these drawings is not required. Additional components such as instruments, valves, solenoids,

pumps, and switches may be used to provide additional information and coordinate the functions of the component systems. Other components, such as snubbers, which are not needed to maintain accuracy on some systems, may be excluded if their exclusion is based upon good engineering judgment.

(6) Other sampling and/or analytical systems may be used if shown to yield equivalent results and if approved in advance by the Administrator.

(b) *Component description.* The components necessary for exhaust 0sampling must meet the following requirements:

(1) *Exhaust dilution system.* The PDP–CVS must conform to all of the requirements listed for the exhaust gas PDP–CVS in § 90.420 of this chapter. The CFV–CVS must conform to all of the requirements listed for the exhaust gas CFV–CVS in § 90.420 of this chapter. In addition, the CVS must conform to the following requirements:

(i) The flow capacity of the CVS must be sufficient to maintain the diluted exhaust stream in the dilution system at a temperature of 190° C or less at the sampling zone for hydrocarbon measurement and as required to prevent condensation at any point in the dilution system. Gaseous emission samples may be taken directly from this sampling point.

(ii) For the CFV–CVS, either a heat exchanger or electronic flow compensation is required (see Figure 3 in Appendix B of this subpart).

(iii) For the CFV–CVS when a heat exchanger is used, the gas mixture temperature, measured at a point immediately ahead of the critical flow venturi, must be within ±11° C of the average operating temperature observed during the test with the simultaneous requirement that condensation does not occur. The temperature measuring system (sensors and readout) must have an accuracy and precision of ±2° C. For systems utilizing a flow compensator to maintain proportional flow, the requirement for maintaining constant temperature is not necessary.

(2) *Continuous HC measurement system.* (i) The continuous HC sample system (as shown in Figure 2 or 3 in Appendix B of this subpart) uses an ''overflow'' zero and span system. In this type of system, excess zero or span gas spills out of the probe when zero and span checks of the analyzer are made.

(ii) No other analyzers may draw a sample from the continuous HC sample probe, line, or system, unless a common sample pump is used for all analyzers and the sample line system design reflects good engineering practice.

(iii) The overflow gas flow rates into the sample line must be at least 105 percent of the sample system flow rate.

(iv) The overflow gases must enter the sample line as close as practical to the outside surface of the CVS duct or dilution system.

(v) The continuous HC sampling system consists of a probe (which for a HFID analyzer must raise the sample to the specified temperature) and, where used, a sample transfer system (which for a HFID must maintain the specified temperature). The HFID continuous hydrocarbon sampling system (exclusive of the probe) must:

(A) Maintain a wall temperature of 190° C ±11° C as measured at every separately controlled heated component (that is, filters, heated line sections), using permanent thermocouples located at each of the separate components.

(B) Have a wall temperature of 190° C ±11° C over its entire length. The temperature of the system is demonstrated by profiling the thermal characteristics of the system where possible at initial installation and after any major maintenance performed on the system. The profiling is to be accomplished using the insertion thermocouple probing technique. The system temperature must be monitored continuously during testing at the locations and temperature described in § 90.421(b)(2).

(C) Maintain a gas temperature of 190° C ±11° C immediately before the heated filter and HFID. Determine these gas temperatures by a temperature sensor located immediately upstream of each component.

(vi) The continuous hydrocarbon sampling probe:

(A) Is defined as the first 25.4 to 76.2 cm of the continuous hydrocarbon sampling system.

(B) Has a 0.483 cm minimum inside diameter.

(C) Is installed in the dilution system at a point where the dilution air and exhaust are well mixed and provide a homogenous mixture.

(D) Is sufficiently distant (radially) from other probes and the system wall so as to be free from the influence of any wakes or eddies.

(E) For a continuous HFID sample probe, the probe must increases the gas stream temperature to 190° C ±11° C at the exit of the probe. Demonstrate the ability of the probe to accomplish this using the insertion thermocouple technique at initial installation and after any major maintenance. Demonstrate compliance with the temperature specification by continuously recording during each test the temperature of either the gas stream or the wall of the sample probe at its terminus.

(vii) The response time of the continuous measurement system must be taken into account when logging test data.

(3) *Sample Mixing.* (i) Configure the dilution system to ensure a well mixed, homogeneous sample prior to the sampling probe(s).

(ii) Make the temperature of the diluted exhaust stream inside the dilution system sufficient to prevent water condensation.

(iii) Direct the engine exhaust downstream at the point where it is introduced into the dilution system.

(4) *Continuously integrated* NO_X, CO, and CO_2 measurement systems.

(i) *Sample probe requirements:*

(A) The sample probe for continously intergrated NO_X, CO, and CO_2 must be in the same plane as the continuous HC probe, but sufficiently distant (radially) from other probes and the tunnel wall so as to be free from the influences of any wakes or eddies.

(B) The sample probe for continously intergrated NO_X, CO, and CO_2 must be heated and insulated over the entire length, to prevent water condensation, to a minimum temperature of 55° C. Sample gas temperature immediately before the first filter in the system must be at least 55° C.

(ii) Conform to the continuous NO_X, CO, or CO_2 sampling and analysis system to the specifications of part 86, subpart D of this chapter with the following exceptions and revisions:

(A) Heat the system components requiring heating only to prevent water condensation, the minimum component temperature is 55° C.

(B) Coordinate analysis system response time with CVS flow fluctuations and sampling time/test cycle offsets, if necessary.

(C) Use only analytical gases conforming to the specifications of § 90.312 of this subpart for calibration, zero and span checks.

(D) Use a calibration curve conforming to § 90.321 for CO and CO_2 and § 90.318 for NO_X for any range on a linear analyzer below 155 ppm.

(iii) Convert the chart deflections or voltage output of analyzers with non-linear calibration curves to concentration values by the calibration curve(s) specified in § 90.321 of this chapter before flow correction (if used) and subsequent integration takes place.

§ 90.422 Background sample.

(a) Background samples are produced by drawing a sample of the dilution air during the exhaust collection phase of each test cycle mode.

(1) An individual background sample may be produced and analyzed for each mode. Hence, a unique background value will be used for the emission calculations for each mode.

(2) Alternatively, a single background sample may be produced by drawing a sample during the collection phase of each test cycle mode. Hence, a single cumulative background value will be used for the emission calculations for each mode.

(b) For analysis of the individual sample described in paragraph (a)(1) of this section, a single value representing the average chart deflection over a 10-second stabilized period must be stored. All readings taken during the data logging period must be stable within ± one percent of full scale.

(c) Measure HC, CO, CO_2, and NO_X exhaust and background concentrations in the sample bag(s) with approximately the same flow rates and pressures used during calibration.

§ 90.423 Exhaust gas analytical system; CVS grab sample.

(a) *Schematic drawings.* Figure 4 in Appendix B of this subpart is a schematic drawing of the exhaust gas analytical systems used for analyzing CVS grab ''bag'' samples from spark-ignition engines. Since various configurations can produce accurate results, exact conformance with the drawing is not required. Additional components such as instruments, valves, solenoids, pumps and switches may be used to provide additional information and coordinate the functions of the component systems. Other components such as snubbers, which are not needed to maintain accuracy in some systems, may be excluded if their exclusion is based upon good engineering judgment.

(b) *Major component description.* The analytical system, Figure 4 in Appendix B of this subpart, consists of a flame ionization detector (FID) or a heated flame ionization detector (HFID) for the measurement of hydrocarbons, non-dispersive infrared analyzers (NDIR) for the measurement of carbon monoxide and carbon dioxide, and a chemiluminescence detector (CLD) (or heated CLD (HCLD)) for the measurement of oxides of nitrogen. The exhaust gas analytical system must conform to the following requirements:

(1) The CLD (or HCLD) requires that the nitrogen dioxide present in the sample be converted to nitric oxide before analysis. Other types of analyzers may be used if shown to yield equivalent results and if approved in advance by the Administrator.

(2) If CO instruments are used which are essentially free of CO_2 and water vapor interference, the use of the conditioning column may be deleted. (See § 90.317 and § 90.320.)

(3) A CO instrument is considered to be essentially free of CO_2 and water vapor interference if its response to a mixture of three percent CO_2 in N_2, which has been bubbled through water at room temperature, produces an equivalent CO response, as measured on the most sensitive CO range, which is less than one percent of full-scale CO concentration on ranges above 300 ppm full scale or less than three ppm on ranges below 300 ppm full scale. (See § 90.317.)

(c) *Alternate analytical systems.* Analysis systems meeting the specifications and requirements of this subpart for dilute sampling may be used upon approval of the Administrator.

(d) *Other analyzers and equipment.* Other types of analyzers and equipment may be used if shown to yield equivalent results and if approved in advance by the Administrator.

§ 90.424 Dilute sampling procedures—CVS calibration.

(a) The CVS is calibrated using an accurate flowmeter and restrictor valve.

(1) The flowmeter calibration must be traceable to the National Institute for Standards and Testing (NIST) and serves as the reference value (NIST ''true'' value) for the CVS calibration. (Note: In no case should an upstream screen or other restriction which can affect the flow be used ahead of the flowmeter unless calibrated throughout the flow range with such a device.)

(2) The CVS calibration procedures are designed for use of a ''metering venturi'' type flowmeter. Large radius or American Society of Mechanical Engineers (ASME) flow nozzles are considered equivalent if traceable to NIST measurements. Other measurement systems may be used if shown to be equivalent under the test conditions in this section and traceable to NIST measurements.

(3) Measurements of the various flowmeter parameters are recorded and related to flow through the CVS.

(4) Procedures using both PDP–CVS and CFV–CVS are outlined in the following paragraphs. Other procedures yielding equivalent results may be used if approved in advance by the Administrator.

(b) After the calibration curve has been obtained, verification of the entire system may be performed by injecting a known mass of gas into the system and comparing the mass indicated by the system to the true mass injected. An indicated error does not necessarily mean that the calibration is wrong, since other factors can influence the accuracy of the system (for example, analyzer calibration, leaks, or HC hangup). A verification procedure is found in paragraph (e) of this section.

(c) *PDP–CVS calibration.* (1) The following calibration procedure outlines the equipment, the test configuration, and the various parameters which must be measured to establish the flow rate of the CVS pump.

(i) All the parameters related to the pump are simultaneously measured with the parameters related to a flowmeter which is connected in series with the pump.

(ii) The calculated flow rate, in cm^3/s, (at pump inlet absolute pressure and temperature) can then be plotted versus a correlation function which is the value of a specific combination of pump parameters.

(iii) The linear equation which relates the pump flow and the correlation function is then determined.

(iv) In the event that a CVS has a multiple speed drive, a calibration for each range used must be performed.

(2) This calibration procedure is based on the measurement of the absolute values of the pump and flowmeter parameters that relate the flow rate at each point. Two conditions must be maintained to assure the accuracy and integrity of the calibration curve:

(i) The temperature stability must be maintained during calibration. (Flowmeters are sensitive to inlet temperature oscillations; this can cause the data points to be scattered. Gradual changes in temperature are acceptable as long as they occur over a period of several minutes.)

(ii) All connections and ducting between the flowmeter and the CVS pump must be absolutely void of leakage.

(3) During an exhaust emission test the measurement of these same pump parameters enables the user to calculate the flow rate from the calibration equation.

(4) Connect a system as shown in Figure 5 in Appendix B of this subpart. Although particular types of equipment are shown, other configurations that yield equivalent results may be used if approved in advance by the Administrator. For the system indicated, the following measurements and accuracies are required:

CALIBRATION DATA MEASUREMENTS

Parameter	Symbol	Units	Sensor-readout tolerances
Barometric pressure (corrected)	P_B	kPa	±.340 kPa.
Ambient temperature	T_A	° C	±.28° C.
Air temperature into metering venturi	ETI	° C	±1.11° C.
Pressure drop between the inlet and throat of metering venturi	EDP	kPa	±0.012 kPa.
Air flow	Q_S	m³/min.	±0.5 percent of NIST value.
Air temperature at CVS pump inlet	PTI	° C	±1.11° C.
Pressure depression at CVS pump inlet	PPI	kPa	±0.055 kPa.
Pressure head at CVS pump outlet	PPO	kPa	±0.055 kPa.
Air temperature at CVS pump outlet (optional)	PTO	° C	±1.11° C.
Pump revolutions during test period	N	Revs	±1 Rev.
Elapsed time for test period	t	s	±0.5 s.

(5) After the system has been connected as shown in Figure 5 in Appendix B of this subpart, set the variable restrictor in the wide open position and run the CVS pump for 20 minutes. Record the calibration data.

(6) Reset the restrictor valve to a more restricted condition in an increment of pump inlet depression that will yield a minimum of six data points for the total calibration. Allow the system to stabilize for three minutes and repeat the data acquisition.

(7) *Data analysis:*

(i) The air flow rate, Q_s, at each test point is calculated in standard cubic feet per minute 20° C, 101.3 kPa from the flowmeter data using the manufacturer's prescribed method.

(ii) The air flow rate is then converted to pump flow, V_o, in cubic meter per revolution at absolute pump inlet temperature and pressure:

$$V_o = \frac{Q_s}{n} \times \frac{T_p}{293} \times \frac{101.3\,\text{kPa}}{P_p}$$

Where:

V_o=Pump flow, m³/rev at T_p, P_p.

Q_s=Meter air flow rate in standard cubic meters per minute, standard conditions are 20° C, 101.3 kPa.

n=Pump speed in revolutions per minute.

T_p=Absolute pump inlet temperature in Kelvin, =PTI+273 [°K]

P_p=Absolute pump inlet pressure, kPa. $=P_B - PPI$

Where:

P_B=barometric pressure, kPa

PPI=Pump inlet depression, kPa.

(iii) The correlation function at each test point is then calculated from the calibration data:

$$X_o = \frac{1}{n}\sqrt{\left(\frac{\Delta p}{P_e}\right)}$$

Where:

X_o=correlation function.

Δp=The pressure differential from pump inlet to pump outlet [kPa] $\Delta p = P_e - P_p$.

Where:

P_e=Absolute pump outlet pressure [kPa], $P_e = P_B + PPI$

(iv) A linear least squares fit is performed to generate the calibration equation which has the form:

$$V_0 = D_o - M(X_o)$$

Where:

D_o and M are the intercept and slope constants, respectively, describing the regression line.

(8) A CVS system that has multiple speeds should be calibrated on each speed used. The calibration curves generated for the ranges will be approximately parallel and the intercept values, D_o, will increase as the pump flow range decreases.

(9) If the calibration has been performed carefully, the calculated values from the equation will be within ± 0.50 percent of the measured value of V_o. Values of M will vary from one pump to another, but values of D_o for pumps of the same make, model, and range should agree within ± three percent of each other. Calibrations should be performed at pump start-up and after major maintenance to assure the stability of the pump slip rate. Analysis of mass injection data will also reflect pump slip stability.

(d) *CFV–CVS calibration.* (1) Calibration of the CFV is based upon the flow equation for a critical venturi. Gas flow is a function of inlet pressure and temperature:

$$Q_s = \frac{K_v P}{\sqrt{T}}$$

Where:

Q_s=flow rate [m³/min.]

K_v=calibration coefficient

P=absolute pressure [kPa]

T=absolute temperature [°K]

The calibration procedure described in paragraph (d)(3) of this section establishes the value of the calibration coefficient at measured values of pressure, temperature, and air flow.

(2) The manufacturer's recommended procedure must be followed for calibrating electronic portions of the CFV.

(3) Measurements necessary for flow calibration are as follows:

CALIBRATION DATA MEASUREMENTS

Parameter	Symbol	Units	Tolerances
Barometric Pressure (corrected)	P_B	kPa	±.34 kPa
Air temperature, into flowmeter	*ETI*	° C	±.28° C
Pressure drop between the inlet and throat of metering venturi	*EDP*	in. H_2O	±.05 in H_2O
Air flow	Q_S	m³/min	±.5 percent of NIST value
CFV inlet depression	*PPI*	(kPa)	±.055 kPa
Temperature at venturi inlet	T_V	° C	±2.22° C

(4) Set up equipment as shown in Figure 6 in Appendix B of this subpart and eliminate leaks. (Leaks between the flow measuring devices and the critical flow venturi will seriously affect the accuracy of the calibration.)

(5) Set the variable flow restrictor to the open position, start the blower, and allow the system to stabilize. Record data from all instruments.

(6) Vary the flow restrictor and make at least eight readings across the critical flow range of the venturi.

(7) *Data analysis.* The data recorded during the calibration are to be used in the following calculations:

(i) Calculate the air flow rate (designated as Q_s) at each test point in standard cubic feet per minute from the flow meter data using the manufacturer's prescribed method.

(ii) Calculate values of the calibration coefficient for each test point:

Where:

Q_s=Flow rate in standard cubic meters per minute, at

$$K_v = \frac{Q_s \sqrt{T_v}}{P_v}$$

the standard conditions of 20° C, 101.3 kPa.

T_v=Temperature at venturi inlet, °K.

P_v=Pressure at venturi inlet, kPa=$P_B - P_{PI}$

Where:

P_{PI}=Venturi inlet pressure depression, kPa.

(iii) Plot K_v as a function of venturi inlet pressure. For choked flow, K_v will have a relatively constant value. As pressure decreases (vacuum increases), the venturi becomes unchoked and K_v decreases. (See Figure 7 in Appendix B to Subpart D.)

(iv) For a minimum of eight points in the critical region, calculate an average K_v and the standard deviation.

(v) If the standard deviation exceeds 0.3 percent of the average K_v , take corrective action.

(e) *CVS system verification.* The following ''gravimetric'' technique may be used to verify that the CVS and analytical instruments can accurately measure a mass of gas that has been injected into the system. (Verification can also be accomplished by constant flow metering using critical flow orifice devices.)

(1) Obtain a small cylinder that has been charged with 99.5 percent or greater propane or carbon monoxide gas (CAUTION—carbon monoxide is poisonous).

(2) Determine a reference cylinder weight to the nearest 0.01 grams.

(3) Operate the CVS in the normal manner and release a quantity of pure propane into the system during the sampling period (approximately five minutes).

(4) The calculations are performed in the normal way except in the case of propane. The density of propane (0.6109 kg/m^3/carbon atom) is used in place of the density of exhaust hydrocarbons.

(5) The gravimetric mass is subtracted from the CVS measured mass and then divided by the gravimetric mass to determine the percent accuracy of the system.

(6) Good engineering practice requires that the cause for any discrepancy greater than ± two percent must be found and corrected.

§ 90.425 CVS calibration frequency.

Calibrate the CVS positive displacement pump or critical flow venturi following initial installation, major maintenance, or as necessary when indicated by the CVS system verification (described in § 90.424(e)).

§ 90.426 Dilute emission sampling calculations—gasoline fueled engines.

(a) The final reported emission test results must be computed by use of the following formula:

$$A_{WM} = \frac{\sum_{i}^{n}\left(W_i \cdot WF_i\right)}{\sum_{i}^{n}\left(P_i \cdot WF_i\right)} \cdot K_{H_i}$$

Where:

A_{WM}=Final weighted brake-specific mass emission rate for an emission (HC, CO, CO_2, or NO_X) [g/kW-hr]

W_i=Average mass flow rate of an emission (HC, CO, CO_2, NO_X) from a test engine during mode i [g/hr]

WF_i=Weighting factor for each mode i as defined in § 90.410(a).

P_i=Gross average power generated during mode i [kW], calculated from the following equation,

$$P_i = \frac{2\pi}{60{,}000} \times \text{speed} \times \text{torque}$$

Where:

speed=average engine speed measured during mode i [rev./minute]

torque=average engine torque measured during mode i [N-m]

K_{Hi}=NO_X humidity correction factor for mode i. This correction factor only affects calculations for NO_X and is equal to one for all other emissions. K_{Hi} is also equal to 1 for all two-stroke engines.

(b) The mass flow rate, W_i in g/hr, of an emission for mode i is determined from the following equations:

$$W_i = Q_i \cdot \text{Density} \cdot \left(\frac{C_{Di} - C_{Bi}}{10^6} \cdot \left(1 - \frac{1}{DF_i}\right)\right)$$

Where:

Q_i=Volumetric flow rate of the dilute exhaust through the CVS at standard conditions [m^3/hr at STP].

Density=Density of a specific emission ($Density_{HC}$, $Density_{CO}$, $Density_{CO2}$, $Density_{NOx}$) [g/m^3].

DF_i=Dilution factor of the dilute exhaust during mode i.

C_{Di}=Concentration of the emission (HC, CO, NO_X) in dilute exhaust extracted from the CVS during mode i [ppm].

C_{Bi}=Concentration of the emission (HC, CO, NO_X) in the background sample during mode i [ppm].

STP=Standard temperature and pressure. All volumetric calculations made for the equations in this section are to be corrected to a standard temperature of 20° C and 101.3 kPa.

(c) Densities for emissions that are to be measured for this test procedure are:

$Density_{HC}$=576.8 g/m^3
$Density_{NOX}$=1912 g/m^3
$Density_{CO}$=1164 g/m^3
$Density_{CO2}$=1829 g/m^3

(1) The value of $Density_{HC}$ above is calculated based on the assumption that the fuel used has a carbon to hydrogen ratio of 1:1.85. For other fuels $Density_{HC}$ can be calculated from the following formula:

$$\text{Density}_{HC} = \frac{M_{HC}}{R_{STP}}$$

Where:

M_{HC}=The molecular weight of the hydrocarbon molecule divided by the number of carbon atoms in the molecule [g/mole]

R_{STP}=Ideal gas constant for a gas at STP=0.024065 [m^3-mole].

(2) The idealized molecular weight of the exhaust hydrocarbons, i.e., the molecular weight of the hydrocarbon molecule divided by the number of carbon atoms in the molecule, M_{HC}, can be calculated from the following formula:

$$M_{HC} = M_C + \alpha M_H + \beta M_O$$

Where:

M_C=Molecular weight of carbon=12.01 [g/mole]

M_H=Molecular weight of hydrogen=1.008 [g/mole]

M_O=Molecular weight of oxygen=16.00 [g/mole]

α=Hydrogen to carbon ratio of the test fuel

β=Oxygen to carbon ratio of the test fuel

(3) The value of $Density_{NOX}$ above assumes that NO_X is entirely in the form of NO_2

(d) The dilution factor, DF, is the ratio of the volumetric flow rate of the background air to that of the

$$DF = \frac{13.4}{C_{D_{HC}} + C_{D_{CO}} + C_{D_{CO_2}}}$$

raw engine exhaust. The following formula is used to determine DF:

Where:

$C_{D\ HC}$=Concentration of HC in the dilute sample [ppm]

$C_{D\ CO}$=Concentration of CO in the dilute sample [ppm]

$C_{D\ CO2}$=Concentration of CO_2 in the dilute sample [ppm]

(e) The humidity correction factor K_H is an adjustment made to the measured NO_X. This corrects for the sensitivity that a spark-ignition engine has to the humidity of its combustion air. The following formula is used to determine K_H for NO_X calculations:

$$K_H = \frac{1}{1 - 0.0329(H - 10.71)}$$

Where:

H=Absolute humidity of the engine intake air [grams of water per kilogram of dry air].

(f) Calculate the absolute humidity of the engine intake air H using the following formula:

$$H = \frac{6.211 P_{dew}}{P_b - \left(\frac{P_{dew}}{100}\right)}$$

Where:

P_{dew}=Saturated vapor pressure at the dew point temperature [kPa]

P_b=Barometric pressure [kPa].

(g) Compute the final reported brake-specific fuel consumption (BSFC) by use of the following formula:

$$BSFC = \frac{\sum_{i}^{n}\left(G_{FUEL_i} \times WF_i\right)}{\sum_{i}^{n}\left(P_i \times WF_i\right)}$$

Where:

BSFC=brake-specific fuel consumption in grams of fuel per brake kilowatt-hour [g/kW-hr].

$G_{FUEL\ i}$=mass flow rate of engine fuel during mode i [g/hr]

WF_i=Weighting factors for each mode according to § 90.410(a)

P_i=Gross average power generated during mode i [kW], calculated from the following equation,

$$P_i = \frac{2\pi}{60{,}000} \times speed \times torque$$

Where:

speed=average engine speed measured during mode i [rev./minute]

torque=average engine torque measured during mode i [N–m]

(h) The fuel mass flow rate, F_i, can be either measured or calculated using the following formula

$$F_i = \frac{M_{FUEL}}{T}$$

Where:

M_{FUEL}=Mass of fuel consumed by the engine during the mode [g]

T=Duration of the sampling period [hr]

(i) The mass of fuel consumed during the mode sampling period, M_{FUEL}, can be calculated from the following equation:

$$M_{FUEL} = \frac{G_s}{R_2 \times 273.15}$$

Where:

G_s=Mass of carbon measured during the mode sampling period [g]

R_2=The fuel carbon weight fraction, which is the mass of carbon in fuel per mass of fuel [g/g]

The grams of carbon measured during the mode, G_s, can be calculated from the following equation:

$$G_s = \frac{12.011 \times HC_{mass}}{12.011 + 1.008\alpha} + 0.429CO_{mass} + 0.273CO_{2mass}$$

Where:

HC_{mass}=mass of hydrocarbon emissions for the mode sampling period [grams]

CO_{2mass}=mass of carbon monoxide emissions for the mode sampling period [grams]

CO_{2mass}=mass of carbon dioxide emissions for the mode sampling period [grams]

α=The atomic hydrogen to carbon ratio of the fuel

§ 90.427 Catalyst thermal stress resistance evaluation.

(a) The purpose of the evaluation procedure specified in this section is to determine the effect of thermal stress on catalyst conversion efficiency. The thermal stress is imposed on the test catalyst by exposing it to quiescent heated air in an oven. The evaluation of the effect of such stress on catalyst performance is based on the resultant degradation of the efficiency with which the conversions of specific pollutants are promoted. The application of this evaluation procedure involves the several steps that are described in the following paragraphs.

(b) *Determination of initial conversion efficiency.* (1) A synthetic exhaust gas mixture having the composition specified in § 90.329 is heated to a temperature of 450° C ± 5° C and passed through the new test catalyst or, optionally, a test catalyst that has been exposed to temperatures less than or equal to 500° C for less than or equal to two hours, under flow conditions that are representative of anticipated in-use conditions.

(2) The concentration of each pollutant of interest, that is, hydrocarbons, carbon monoxide, or oxides of nitrogen, in the effluent of the catalyst is determined by means of the instrumentation that is specified for exhaust gas analysis in subpart D of this part.

(3) The conversion efficiency for each pollutant is determined by:

(i) Subtracting the effluent concentration from the initial concentration;

(ii) Dividing this result by the initial concentration; and

(iii) Multiplying this result by 100 percent.

(c) *Imposition of thermal stress.* (1) The catalyst is placed in an oven that has been pre-heated to 1000° C and the temperature of the air in the oven is maintained at 1000° C ± 10° C for six hours.

(2) The catalyst is removed from the oven and allowed to cool to room temperature.

(d) *Determination of final conversion efficiency.* The steps listed in paragraph (b) of this section are repeated.

(e) *Determination of conversion efficiency degradation.*

(1) The final conversion efficiency determined in paragraph (c) of this section is subtracted from the initial

conversion efficiency determined in paragraph (b) of this section.

(2) This result is divided by the initial conversion efficiency.

(3) This result is multiplied by 100 percent.

(f) *Determination of compliance with degradation limit.* The percent degradation determined in paragraph (e) of this section must not be greater than 20 percent.

Appendix A to Subpart E of Part 90—Tables

TABLE 1.—PARAMETERS TO BE MEASURED OR CALCULATED AND RECORDED

Parameter	Units
Airflow rate (dry), if applicable	g/h
Fuel flow rate	g/h
Engine Speed	rpm
Engine Torque Output	N m
Power Output	kW
Air inlet temperature	° C
Air humidity	mg/kg
Coolant temperature (liquid cooled)	° C
Exhaust mixing chamber surface temperature, if applicable	° C
Exhaust sample line temperature, if applicable	° C
Total Accumulated hours of Engine Operation	h
Barometric Pressure	kPa

TABLE 2.—TEST CYCLES FOR CLASS I–V ENGINES

Mode Speed	1	2	3	4	5	6	7	8	9	10	11
	Rated Speed					Intermediate Speed					Idle
Mode Points—A Cycle	.....	.....	.....	.....	.....	1	2	3	4	5	6
Load Percent—A Cycle	.....	.....	.....	.....	.....	100	75	50	25	10	0
Weighting	.....	.....	.....	.....	.....	9%	20%	29%	30%	7%	5%
Mode Points—B Cycle	1	2	3	4	5	.....	.....	.....	.....	.....	6
Load Percent—B Cycle	100	75	50	25	10	.....	.....	.....	.....	.....	0
Weighting	9%	20%	29%	30%	7%	.....	.....	.....	.....	.....	5%
Mode Points—C Cycle	1	.....	.....	.....	.....	.....	.....	.....	.....	.....	2
Load Percent—C Cycle	100	.....	.....	.....	.....	.....	.....	.....	.....	.....	0
Weighting	90%	.....	.....	.....	.....	.....	.....	.....	.....	.....	10%

Appendix B to Subpart E—Figures

BILLING CODE 6560–50–P

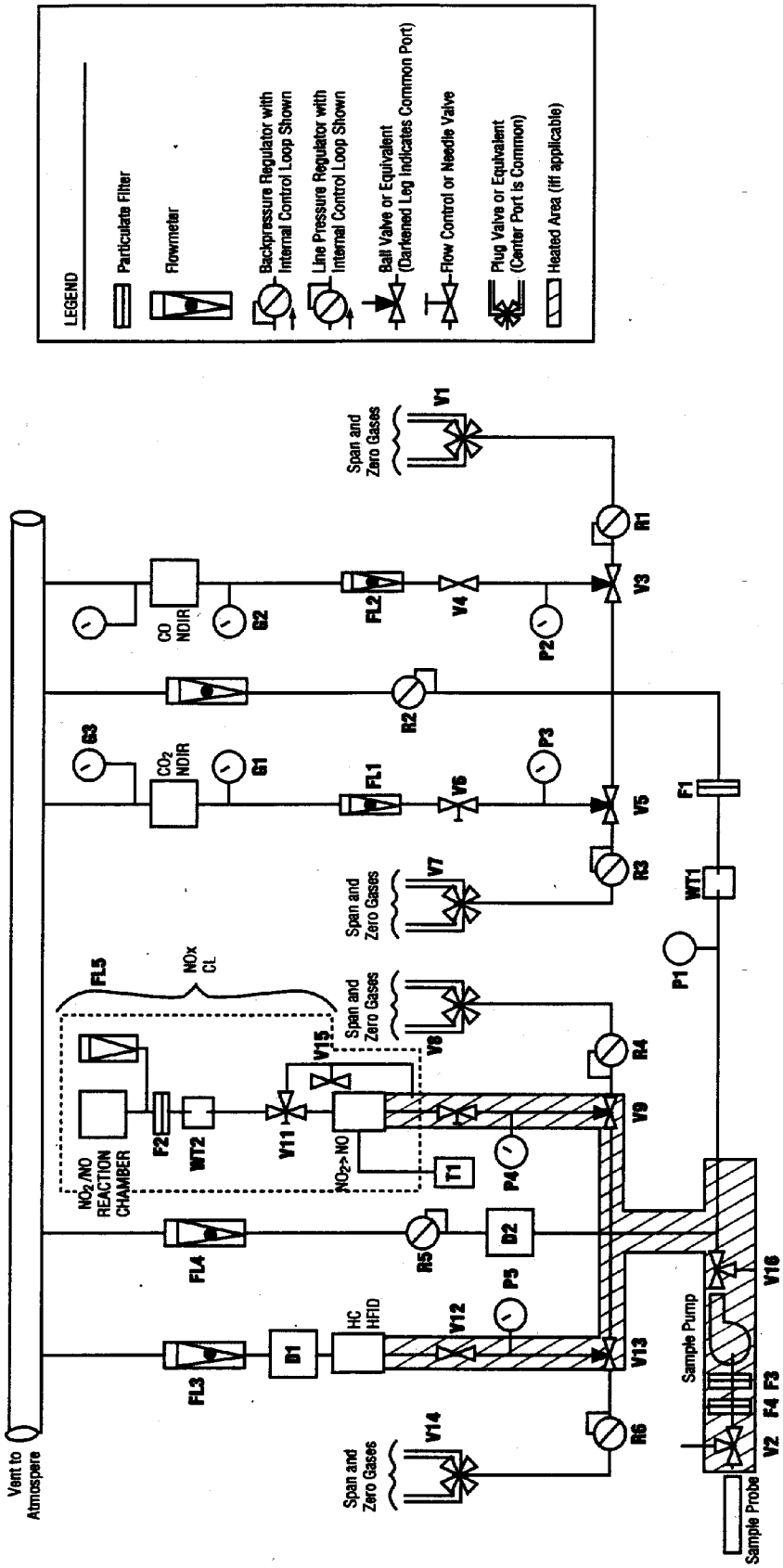

Figure 1. — Exhaust Gas Sampling and Analytical Train, Continuous Sampling

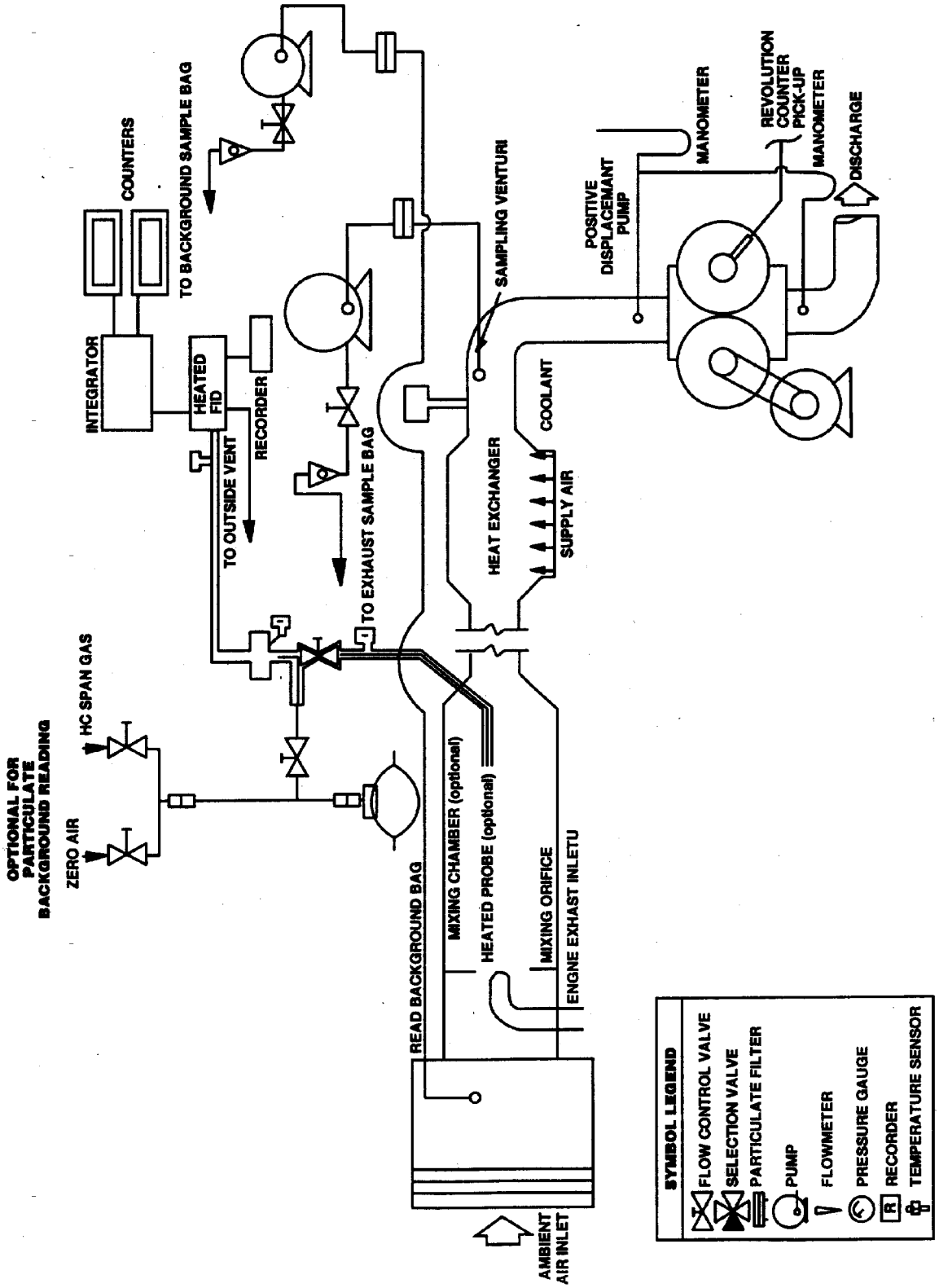

Figure 2 — Gaseous Emissions Sampling System (PDP-CVS) Showing both grab bag sampling and continous sampling

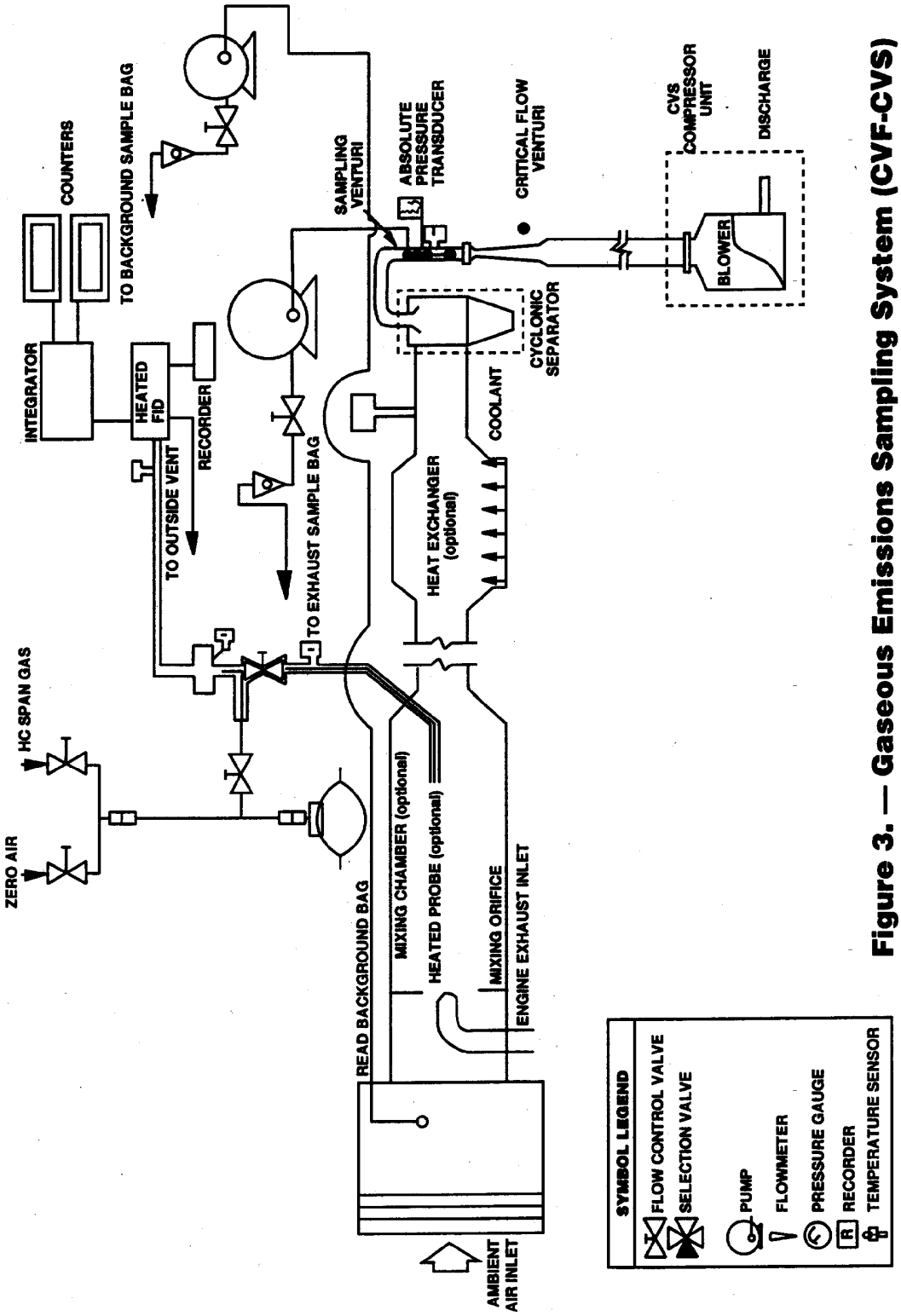

Figure 3. — Gaseous Emissions Sampling System (CVF-CVS)

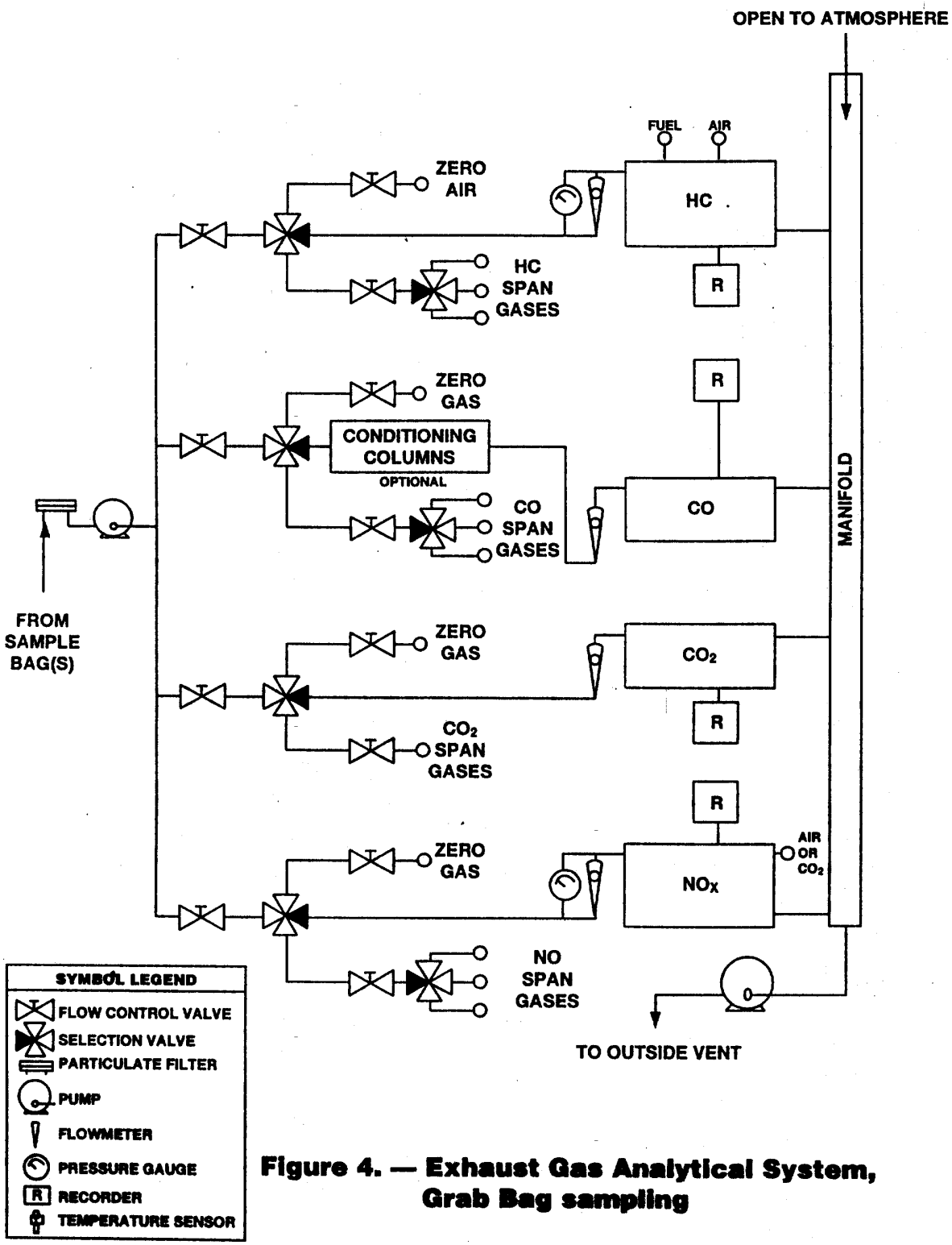

Figure 4. — Exhaust Gas Analytical System, Grab Bag sampling

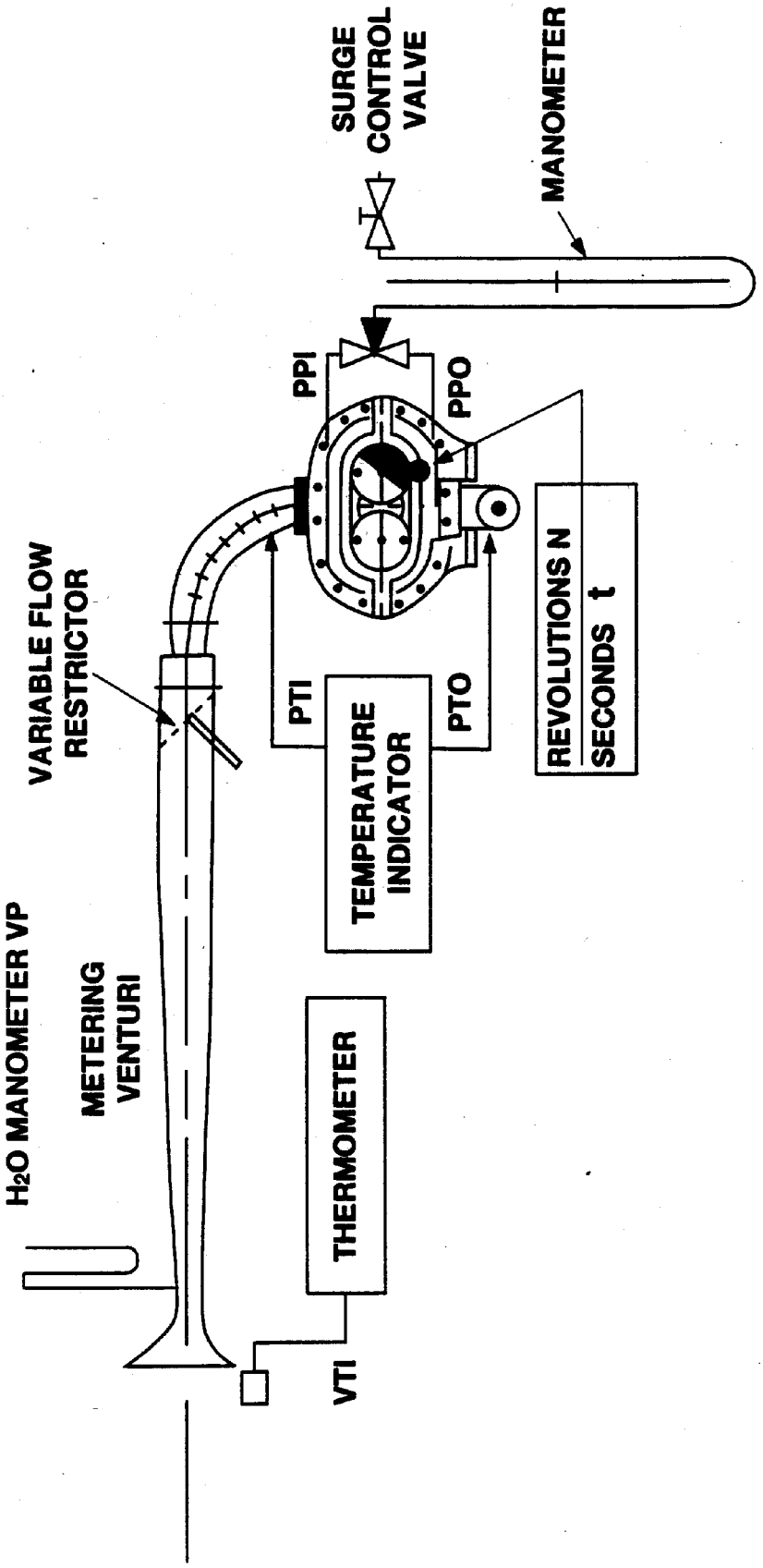

Figure 5. — PDP-CVS Calibration Configuration

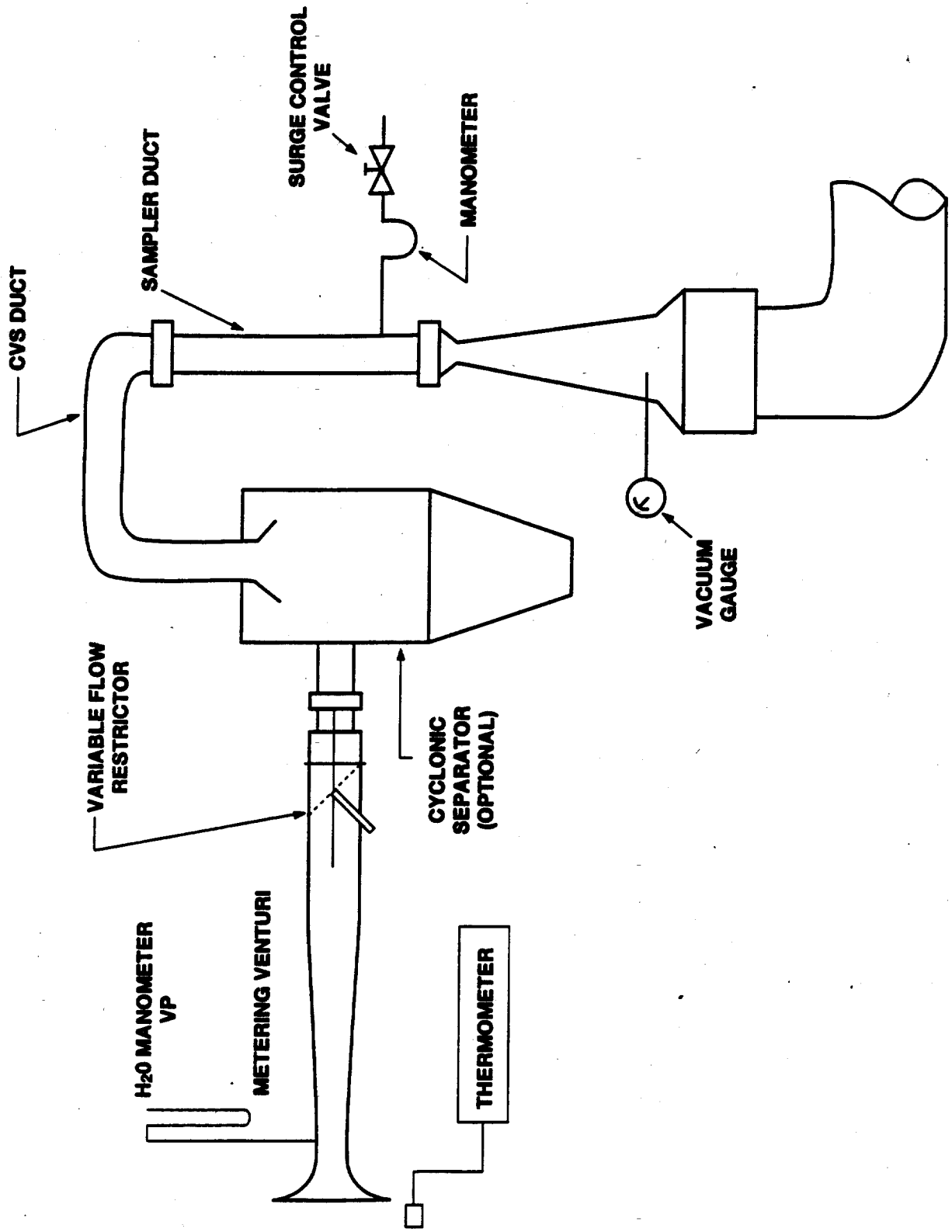

Figure 6. — CFV-CVS Calibration Configuration

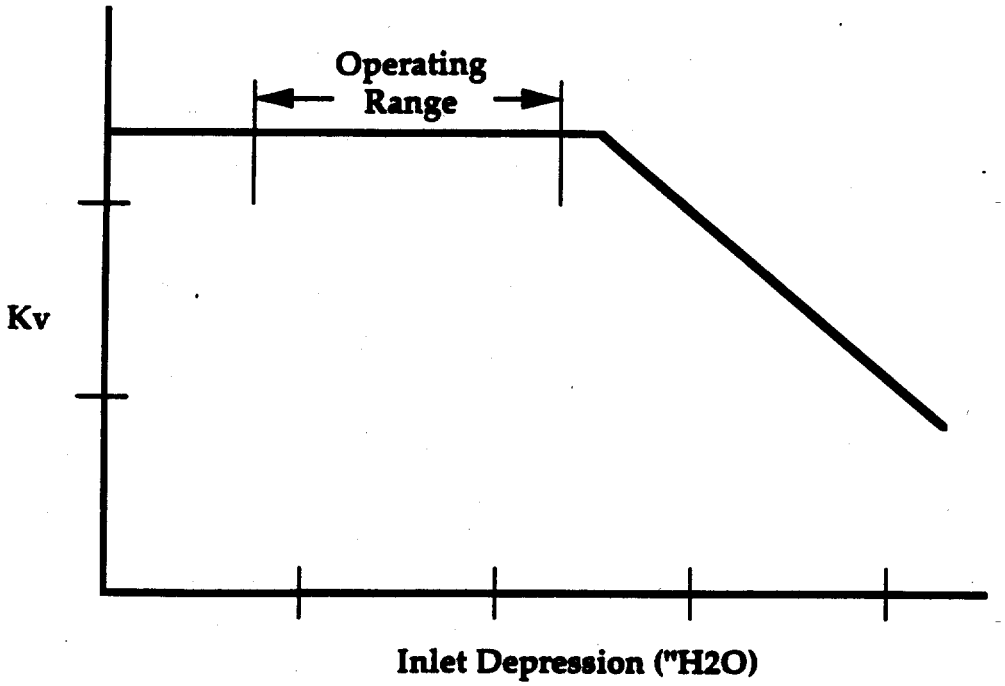

Figure 7.—Sonic Flow Choking

BILLING CODE 6560–50–C

Subpart F—Selective Enforcement Auditing

§ 90.501 Applicability.

The requirements of subpart F shall be applicable to all nonroad engines and vehicles subject to the provisions of subpart A of part 90.

§ 90.502 Definitions.

The definitions in subpart A of this part apply to this subpart. The following definitions shall also apply to this subpart.

Acceptable quality level (AQL) means the maximum percentage of failing engines that can be considered a satisfactory process average for sampling inspections.

Configuration means any subclassification of an engine family which can be described on the basis of gross power, emission control system, governed speed, fuel system, engine calibration, and other parameters as designated by the Administrator.

Inspection criteria means the pass and fail numbers associated with a particular sampling plan.

Test engine means an engine in a test sample.

Test sample means the collection of engines selected from the population of an engine family for emission testing.

§ 90.503 Test orders.

(a) The Administrator shall require any testing under this subpart by means of a test order addressed to the manufacturer.

(b) The test order will be signed by the Assistant Administrator for Air and Radiation or his or her designee. The test order will be delivered in person by an EPA enforcement officer or EPA authorized representative to a company representative or sent by registered mail, return receipt requested, to the manufacturer's representative who signed the application for certification submitted by the manufacturer, pursuant to the requirements of the applicable section of subpart B of this part. Upon receipt of a test order, the manufacturer shall comply with all of the provisions of this subpart and instructions in the test order.

(c) *Information included in test order.* (1) The test order will specify the engine family to be selected for testing, the manufacturer's engine assembly plant or associated storage facility or port facility (for imported engines) from which the engines must be selected, the time and location at which engines must be selected, and the procedure by which engines of the specified family must be selected. The test order may specify the configuration to be audited and/or the number of engines to be selected per day. Engine manufacturers will be required to select a minimum of four engines per day unless an alternate selection procedure is approved pursuant to § 90.507(a), or unless total production of the specified configuration is less than four engines per day. If total production of the specified configuration is less than four engines per day, the manufacturer will select the actual number of engines produced per day.

(2) The test order may include alternate families to be selected for testing at the Administrator's discretion in the event that engines of the specified family are not available for testing because those engines are not being manufactured during the specified time, or are not being stored at the specified assembly plant, associated storage facilities or port of entry.

(3) If the specified family is not being manufactured at a rate of at least two engines per day in the case of manufacturers specified in § 90.508(g)(1), or one engine per day in the case of manufacturers specified in § 90.508(g)(2), over the expected duration of the audit, the Assistant Administrator or his or her designated representative may select engines of the alternate family for testing.

(4) In addition, the test order may include other directions or information essential to the administration of the required testing.

(d) A manufacturer may submit a list of engine families and the corresponding assembly plants, associated storage facilities, or (in the case of imported engines) port facilities from which the manufacturer prefers to have engines selected for testing in response to a test order. In order that a manufacturer's preferred location be considered for inclusion in a test order for a particular engine family, the list must be submitted prior to issuance of the test order. Notwithstanding the fact that a manufacturer has submitted the list, the Administrator may order selection at other than a preferred location.

(e) Upon receipt of a test order, a manufacturer shall proceed in accordance with the provisions of this subpart.

(f)(1) During a given model year, the Administrator shall not issue to a manufacturer more Selective Enforcement Auditing (SEA) test orders than an annual limit determined by the following:

(i) for manufacturers with a projected annual production of less than 100,000 engines bound for the United States market for that model year, the number is two;

(ii) for manufacturers with a projected annual production of 100,000 or more engines bound for the United States market for that model year, by dividing the manufacturer's total number of certified engine families by five and rounding to the nearest whole number, unless the number of engine families is less than eight, in which case the number is two.

(2) If a manufacturer submits to EPA in writing prior to or during the model year a reliable sales projection update or adds engine families or deletes engine families from its production, that information will be used for recalculating the manufacturer's annual limit of SEA test orders.

(3) Any SEA test order for which the family fails under § 90.510 or for which testing is not completed will not be counted against the annual limit.

(4) When the annual limit has been met, the Administrator may issue additional test orders to test those families for which evidence exists indicating noncompliance. An SEA test order issued on this basis will include a statement as to the reason for its issuance.

§ 90.504 Testing by the Administrator.

(a) The Administrator may require by test order under § 90.503 that engines of a specified family be selected in a manner consistent with the requirements of § 90.507 and submitted to the Administrator at the place designated for the purpose of conducting emission tests. These tests will be conducted in accordance with § 90.508 to determine whether engines manufactured by the manufacturer conform with the regulations with respect to which the certificate of conformity was issued.

(b) *Designating official data.* (1) Whenever the Administrator conducts a test on a test engine or the Administrator and manufacturer each conduct a test on the same test engine, the results of the Administrator's test will comprise the official data for that engine.

(2) Whenever the manufacturer conducts all tests on a test engine, the manufacturer's test data will be accepted as the official data, provided that if the Administrator makes a determination based on testing conducted under paragraph (a) of this section that there is a substantial lack of agreement between the manufacturer's test results and the Administrator's test results, no manufacturer's test data from the manufacturer's test facility will be accepted for purposes of this subpart.

(c) If testing conducted under paragraph (a) of this section is unacceptable under § 90.503, the Administrator shall:

(1) Notify the manufacturer in writing of the Administrator's determination that the test facility is inappropriate for conducting the tests required by this subpart and the reasons therefor; and

(2) Reinstate any manufacturer's data upon a showing by the manufacturer that the data acquired under paragraph (a) of this section was erroneous and the manufacturer's data was correct.

(d) The manufacturer may request in writing that the Administrator reconsider his or her determination in paragraph (b)(2) of this section based on data or information which indicates that changes have been made to the test facility and these changes have resolved the reasons for disqualification.

§ 90.505 Maintenance of records; submittal of information.

(a) The manufacturer of any new nonroad engine subject to any of the provisions of this subpart shall establish, maintain, and retain the following adequately organized and indexed records:

(1) *General records.* A description of all equipment used to test engines, as specified in subpart D of this part, in accordance with § 90.508 pursuant to a test order issued under this subpart.

(2) *Individual records.* These records pertain to each audit conducted pursuant to this subpart and shall include:

(i) The date, time, and location of each test;

(ii) The number of hours of service accumulated on the engine when the test began and ended;

(iii) The names of all supervisory personnel involved in the conduct of the audit;

(iv) A record and description of any repairs performed prior to and/or subsequent to approval by the Administrator, giving the date, associated time, justification, name(s) of the authorizing personnel, and names of all supervisory personnel responsible for the conduct of the repair;

(v) The date the engine was shipped from the assembly plant, associated storage facility or port facility and date the engine was received at the testing facility;

(vi) A complete record of all emission tests performed pursuant to this subpart (except tests performed directly by EPA), including all individual worksheets and/or other documentation relating to each test, or exact copies thereof, to be in accordance with the record requirements specified in §§ 90.405, 90.406, 90.418, and/or 90.425 as applicable.

(vii) A brief description of any significant audit events commencing with the test engine selection process, but not described under paragraph (a)(2) of this section, including such extraordinary events as engine damage during shipment.

(3) The manufacturer shall record test equipment description, pursuant to paragraph (a)(1) of this section, for each test cell that can be used to perform emission testing under this subpart.

(b) The manufacturer shall retain all records required to be maintained under this subpart for a period of one year after completion of all testing in response to a test order. Records may be retained as hard copy or reduced to microfilm, floppy disc, and so forth, depending upon the manufacturer's record retention procedure, provided that in every case all the information contained in the hard copy is retained.

(c) The manufacturer shall, upon request by the Administrator, submit the following information with regard to engine production:

(1) Projected U.S. sales data for each engine configuration within each engine family for which certification is requested;

(2) Number of engines, by configuration and assembly plant, scheduled for production for the time period designated in the request;

(3) Number of engines, by configuration and by assembly plant, storage facility or port facility, scheduled to be stored at facilities for the time period designated in the request; and

(4) Number of engines, by configuration and assembly plant, produced during the time period designated in the request that are complete for introduction into commerce.

(d) Nothing in this section limits the Administrator's discretion in requiring the manufacturer to retain additional records or submit information not specifically required by this section.

(e) The manufacturer shall address all reports, submissions, notifications, and requests for approvals made under this subpart to: Director, Manufacturers Operations Division, U.S. Environmental Protection Agency, 6405–J, 401 M Street S.W., Washington, D.C. 20460.

§ 90.506 Right of entry and access.

(a) To allow the Administrator to determine whether a manufacturer is complying with the provisions of this subpart, a test order is issued which authorizes EPA enforcement officers or their authorized representatives upon presentation of credentials to enter during operating hours any of the following places:

(1) Any facility where any engine to be introduced into commerce, including ports of entry, or any emission-related component is manufactured, assembled, or stored;

(2) Any facility where any tests conducted pursuant to a test order or any procedures or activities connected with these tests are or were performed;

(3) Any facility where any engine which is being tested, was tested, or will be tested is present; and

(4) Any facility where any record or other document relating to any of the above is located.

(b) Upon admission to any facility referred to in paragraph (a) of this section, EPA enforcement officers or EPA authorized representatives are authorized to perform the following inspection-related activities:

(1) To inspect and monitor any aspects of engine assembly, storage, testing and other procedures, and the facilities in which these procedures are conducted;

(2) To inspect and monitor any aspect of engine test procedures or activities, including, but not limited to, engine selection, preparation, service accumulation, emission test cycles, and maintenance and verification of test equipment calibration;

(3) To inspect and make copies of any records or documents related to the assembly, storage, selection and testing of an engine in compliance with a test order; and

(4) To inspect and photograph any part or aspect of any engine and any component used in the assembly thereof that is reasonably related to the purpose of the entry.

(c) EPA enforcement officers or EPA authorized representatives are authorized to obtain reasonable assistance without cost from those in charge of a facility to help the officers perform any function listed in this subpart, and they are authorized to request the recipient of a test order to make arrangements with those in charge of a facility operated for the manufacturer's benefit to furnish reasonable assistance without cost to EPA, whether or not the recipient controls the facility.

(1) Reasonable assistance includes, but is not limited to, clerical, copying, interpretation and translation services, the making available on an EPA enforcement officer's or EPA authorized representative's request of personnel of the facility being inspected during their working hours to inform the EPA

enforcement officer or EPA authorized representative of how the facility operates and to answer the officer's questions, and the performance on request of emission tests on any engine which is being, has been, or will be used for SEA testing.

(2) A manufacturer may be compelled to cause the personal appearance of any employee at such a facility before an EPA enforcement officer or EPA authorized representative by written request for his or her appearance, signed by the Assistant Administrator for Air and Radiation, served on the manufacturer. Any such employee who has been instructed by the manufacturer to appear will be entitled to be accompanied, represented, and advised by counsel.

(d) EPA enforcement officers or EPA authorized representatives are authorized to seek a warrant or court order authorizing the EPA enforcement officers or EPA authorized representatives to conduct activities related to entry and access as authorized in this section, as appropriate, to execute the functions specified in this section. EPA enforcement officers or authorized representatives may proceed ex parte to obtain a warrant whether or not the EPA enforcement officers or EPA authorized representatives first attempted to seek permission of the recipient of the test order or the party in charge of the facilities in question to conduct activities related to entry and access as authorized in this section.

(e) A recipient of a test order shall permit an EPA enforcement officer(s) or EPA authorized representative(s) who presents a warrant or court order to conduct activities related to entry and access as authorized in this section and as described in the warrant or court order. The recipient shall also cause those in charge of its facility or a facility operated for its benefit to permit entry and access as authorized in this section pursuant to a warrant or court order whether or not the recipient controls the facility. In the absence of a warrant or court order, an EPA enforcement officer(s) or EPA authorized representative(s) may conduct activities related to entry and access as authorized in this section only upon the consent of the recipient of the test order or the party in charge of the facilities in question.

(f) It is not a violation of this part or of the Clean Air Act for any person to refuse to permit an EPA enforcement officer(s) or an EPA authorized representative(s) to conduct activities related to entry and access as authorized in this section if the officer or representative appears without a warrant or court order.

(g) A manufacturer is responsible for locating its foreign testing and manufacturing facilities in jurisdictions in which local foreign law does not prohibit an EPA enforcement officer(s) or an EPA authorized representative(s) from conducting the entry and access activities specified in this section. EPA will not attempt to make any inspections which it has been informed that local foreign law prohibits.

§ 90.507 Sample selection.

(a) Engines comprising a test sample will be selected at the location and in the manner specified in the test order. If a manufacturer determines that the test engines cannot be selected in the manner specified in the test order, an alternative selection procedure may be employed, provided the manufacturer requests approval of the alternative procedure prior to the start of test sample selection, and the Administrator approves the procedure.

(b) The manufacturer shall assemble the test engines of the family selected for testing using its normal mass production process for engines to be distributed into commerce. If, between the time the manufacturer is notified of a test order and the time the manufacturer finishes selecting test engines, the manufacturer implements any change(s) in its production processes, including quality control, which may reasonably be expected to affect the emissions of the engines selected, then the manufacturer shall, during the audit, inform the Administrator of such changes. If the test engines are selected at a location where they do not have their operational and emission control systems installed, the test order will specify the manner and location for selection of components to complete assembly of the engines. The manufacturer shall assemble these components onto the test engines using normal assembly and quality control procedures as documented by the manufacturer.

(c) No quality control, testing, or assembly procedures will be used on the test engine or any portion thereof, including parts and subassemblies, that have not been or will not be used during the production and assembly of all other engines of that family, unless the Administrator approves the modification in assembly procedures pursuant to paragraph (b) of this section.

(d) The test order may specify that an EPA enforcement officer(s) or authorized representative(s), rather than the manufacturer, select the test engines according to the method specified in the test order.

(e) The order in which test engines are selected determines the order in which test results are to be used in applying the sampling plan in accordance with § 90.510.

(f) The manufacturer shall keep on hand all untested engines, if any, comprising the test sample until a pass or fail decision is reached in accordance with § 90.510(e). The manufacturer may ship any tested engine which has not failed in accordance with § 90.510(b). However, once the manufacturer ships any test engine, it relinquishes the prerogative to conduct retests as provided in § 90.508(i).

§ 90.508 Test procedures.

(a) For nonroad engines subject to the provisions of this subpart, the prescribed test procedures are the appropriate small SI engine test procedures as described in subpart E of this part.

(b)(1) The manufacturer shall not adjust, repair, prepare, or modify the engines selected for testing and shall not perform any emission tests on engines selected for testing pursuant to the test order unless this adjustment, repair, preparation, modification, and/or tests are documented in the manufacturer's engine assembly and inspection procedures and are actually performed or unless these adjustments and/or tests are required or permitted under this subpart or are approved in advance by the Administrator.

(2) The Administrator may adjust or cause to be adjusted any engine parameter which the Administrator has determined to be subject to adjustment for certification and Selective Enforcement Audit testing in accordance with § 90.112(c), to any setting within the physically adjustable range of that parameter, as determined by the Administrator in accordance with § 90.112(a), prior to the performance of any tests. However, if the idle speed parameter is one which the Administrator has determined to be subject to adjustment, the Administrator shall not adjust it to any setting which causes a lower engine idle speed than would have been possible within the physically adjustable range of the idle speed parameter if the manufacturer had accumulated 12 hours of service on the engine under paragraph (c) of this section, all other parameters being identically adjusted for the purpose of the comparison. The manufacturer may be requested to supply information needed to establish an alternate minimum idle speed. The Administrator, in making or specifying

these adjustments, may consider the effect of the deviation from the manufacturer's recommended setting on emission performance characteristics as well as the likelihood that similar settings will occur on in-use engines. In determining likelihood, the Administrator may consider factors such as, but not limited to, the effect of the adjustment on engine performance characteristics and surveillance information from similar in-use engines.

(c) *Service Accumulation.* Prior to performing exhaust emission testing on an SEA test engine, the manufacturer may accumulate on each engine a number of hours of service equal to the greater of 12 hours or the number of hours the manufacturer accumulated during certification on the emission data engine corresponding to the family specified in the test order.

(1) Service accumulation must be performed in a manner using good engineering judgment to obtain emission results representative of normal production engines. This service accumulation must be consistent with the new engine break-in instructions contained in the applicable owner's manual.

(2) The manufacturer shall accumulate service at a minimum rate of 12 hours per engine during each 24-hour period, unless otherwise approved by the Administrator.

(i) The first 24 hour period for service shall begin as soon as authorized checks, inspections, and preparations are completed on each engine.

(ii) The minimum service or mileage accumulation rate does not apply on weekends or holidays.

(iii) If the manufacturer's service or target is less than the minimum rate specified (12 hours per day), then the minimum daily accumulation rate shall be equal to the manufacturer's service target.

(3) Service accumulation shall be completed on a sufficient number of test engines during consecutive 24-hour periods to assure that the number of engines tested per day fulfills the requirements of paragraphs (g)(1) and (g)(2) of this section.

(d) The manufacturer shall not perform any maintenance on test engines after selection for testing, nor shall the Administrator allow deletion of any engine from the test sequence, unless requested by the manufacturer and approved by the Administrator before any engine maintenance or deletion.

(e) The manufacturer shall expeditiously ship test engines from the point of selection to the test facility. If the test facility is not located at or in close proximity to the point of selection, the manufacturer shall assure that test engines arrive at the test facility within 24 hours of selection, except that the Administrator may approve more time for shipment based upon a request by the manufacturer accompanied by a satisfactory justification.

(f) If an engine cannot complete the service accumulation or an emission test because of a malfunction, the manufacturer may request that the Administrator authorize either the repair of that engine or its deletion from the test sequence.

(g) Whenever a manufacturer conducts testing pursuant to a test order issued under this subpart, the manufacturer shall notify the Administrator within one working day of receipt of the test order as to which test facility will be used to comply with the test order. If no test cells are available at a desired facility, the manufacturer must provide alternate testing capability satisfactory to the Administrator.

(1) A manufacturer with projected nonroad engine sales for the United States market for the applicable year of 7,500 or greater shall complete emission testing at a minimum rate of two engines per 24-hour period, including each voided test.

(2) A manufacturer with projected nonroad engine sales for the United States market for the applicable year of less than 7,500 shall complete emission testing at a minimum rate of one engine per 24-hour period, including each voided test.

(3) The Administrator may approve a lower daily rate of emission testing based upon a request by a manufacturer accompanied by a satisfactory justification.

(h) The manufacturer shall perform test engine selection, shipping, preparation, service accumulation, and testing in such a manner as to assure that the audit is performed in an expeditious manner.

(i) *Retesting.* (1) The manufacturer may retest any engines tested during a Selective Enforcement Audit once a fail decision for the audit has been reached in accordance with § 90.510(e).

(2) The Administrator may approve retesting at other times based upon a request by the manufacturer accompanied by a satisfactory justification.

(3) The manufacturer may retest each engine a total of three times. The manufacturer shall test each engine or vehicle the same number of times. The manufacturer may accumulate additional service before conducting a retest, subject to the provisions of paragraph (c) of this section.

(j) A manufacturer may test engines with the test procedure specified in subpart E of this part to demonstrate compliance with the exhaust emission standards; however, if alternate procedures were used in certification pursuant to § 90.120, then those alternate procedures shall be used.

§ 90.509 Calculation and reporting of test results.

(a) Initial test results are calculated following the applicable test procedure specified in paragraph (a) of § 90.508. The manufacturer shall round these results, in accordance with ASTM E29–93a, to the number of decimal places contained in the applicable emission standard expressed to one additional significant figure. ASTM E29–93a has been incorporated by reference. See § 90.7.

(b) Final test results are calculated by summing the initial test results derived in paragraph (a) of this section for each test engine, dividing by the number of tests conducted on the engine, and rounding in accordance with ASTM E29–93a to the same number of decimal places contained in the applicable standard expressed to one additional significant figure.

(c) Within five working days after completion of testing of all engines pursuant to a test order, the manufacturer shall submit to the Administrator a report which includes the following information:

(1) The location and description of the manufacturer's exhaust emission test facilities which were utilized to conduct testing reported pursuant to this section;

(2) The applicable standards or compliance levels against which the engines were tested;

(3) A description of the engine and its associated emission-related component selection method used;

(4) For each test conducted;

(i) Test engine description, including:

(A) Configuration and engine family identification;

(B) Year, make and build date;

(C) Engine identification number; and

(D) Number of hours of service accumulated on engine prior to testing;

(ii) Location where service accumulation was conducted and description of accumulation procedure and schedule;

(iii) Test number, date, test procedure used, initial test results before and after rounding and final test results for all exhaust emission tests, whether valid or invalid, and the reason for invalidation, if applicable;

(iv) A complete description of any modification, repair, preparation,

maintenance, and/or testing which was performed on the test engine and has not been reported pursuant to any other paragraph of this subpart and will not be performed on all other production engines;

(v) Where an engine was deleted from the test sequence by authorization of the Administrator, the reason for the deletion;

(vi) Any other information the Administrator may request relevant to the determination as to whether the new engines being manufactured by the manufacturer do in fact conform with the regulations with respect to which the certificate of conformity was issued; and

(5) The following statement and endorsement:

This report is submitted pursuant to Sections 213 and 208 of the Clean Air Act. This Selective Enforcement Audit was conducted in complete conformance with all applicable regulations under 40 CFR Part 90 *et seq.* and the conditions of the test order. No emission-related changes to production processes or quality control procedures for the engine family tested have been made between receipt of the test order and conclusion of the audit. All data and information reported herein is, to the best of (Company Name) knowledge, true and accurate. I am aware of the penalties associated with violations of the Clean Air Act and the regulations thereunder. (Authorized Company Representative.)

§ 90.510 Compliance with acceptable quality level and passing and failing criteria for selective enforcement audits.

(a) The prescribed acceptable quality level is 40 percent.

(b) A failed engine is one whose final test results pursuant to § 90.509(b), for one or more of the applicable pollutants, exceed the applicable emission standard.

(c) The manufacturer shall test engines comprising the test sample until a pass decision is reached for all pollutants or a fail decision is reached for one pollutant. A pass decision is reached when the cumulative number of failed engines, as defined in paragraph (b) of this section, for each pollutant is less than or equal to the pass decision number, as defined in paragraph (d) of this section, appropriate to the cumulative number of engines tested. A fail decision is reached when the cumulative number of failed engines for one or more pollutants is greater than or equal to the fail decision number, as defined in paragraph (d) of this section, appropriate to the cumulative number of engines tested.

(d) The pass and fail decision numbers associated with the cumulative number of engines tested are determined by using the tables in Appendix A to this subpart, ''Sampling Plans for Selective Enforcement Auditing of Small Nonroad Engines,'' appropriate to the projected sales as made by the manufacturer in its report to EPA under § 90.505(c)(1). In the tables in Appendix A to this subpart, sampling plan ''stage'' refers to the cumulative number of engines tested. Once a pass or fail decision has been made for a particular pollutant, the number of engines with final test results exceeding the emission standard for that pollutant shall not be considered any further for the purposes of the audit.

(e) Passing or failing of an SEA occurs when the decision is made on the last engine test required to make a decision under paragraph (c) of this section.

(f) The Administrator may terminate testing earlier than required in paragraph (c) of this section.

§ 90.511 Suspension and revocation of certificates of conformity.

(a) The certificate of conformity is suspended with respect to any engine failing pursuant to § 90.510(b) effective from the time that testing of that engine is completed.

(b) The Administrator may suspend the certificate of conformity for a family which does not pass an SEA, pursuant to paragraph § 90.510(c), based on the first test or all tests conducted on each engine. This suspension will not occur before ten days after failure of the audit.

(c) If the results of testing pursuant to these regulations indicate that engines of a particular family produced at one plant of a manufacturer do not conform to the regulations with respect to which the certificate of conformity was issued, the Administrator may suspend the certificate of conformity with respect to that family for engines manufactured by the manufacturer at all other plants.

(d) Notwithstanding the fact that engines described in the application may be covered by a certificate of conformity, the Administrator may suspend such certificate in whole or in part if the Administrator finds any one of the following infractions to be substantial:

(1) The manufacturer refuses to comply with the provisions of a test order issued by the Administrator under § 90.503.

(2) The manufacturer refuses to comply with any of the requirements of this subpart.

(3) The manufacturer submits false or incomplete information in any report or information provided to the Administrator under this subpart.

(4) The manufacturer renders inaccurate any test data submitted under this subpart.

(5) An EPA enforcement officer or EPA authorized representative is denied the opportunity to conduct activities related to entry and access as authorized in this subpart and a warrant or court order is presented to the manufacturer or the party in charge of a facility in question.

(6) An EPA enforcement officer or EPA authorized representative is unable to conduct activities related to entry and access as authorized in § 90.506 because a manufacturer has located a facility in a foreign jurisdiction where local law prohibits those activities.

(e) The Administrator shall notify the manufacturer in writing of any suspension or revocation of a certificate of conformity in whole or in part, except that the certificate is immediately suspended with respect to any failed engines as provided for in paragraph (a) of this section.

(f) The Administrator may revoke a certificate of conformity for a family when the certificate has been suspended pursuant to paragraph (b) or (c) of this section if the proposed remedy for the nonconformity, as reported by the manufacturer to the Administrator, is one requiring a design change or changes to the engine and/or emission control system as described in the application for certification of the affected family.

(g) Once a certificate has been suspended for a failed engine, as provided for in paragraph (a) of this section, the manufacturer shall take the following actions:

(1) Before the certificate is reinstated for that failed engine;

(i) Remedy the nonconformity; and

(ii) Demonstrate that the engine conforms to applicable standards by retesting the engine in accordance with these regulations.

(2) Submit a written report to the Administrator, after successful completion of testing on the failed engine, which contains a description of the remedy and test results for each engine in addition to other information that may be required by this regulation.

(h) Once a certificate for a failed family has been suspended pursuant to paragraph (b) or (c) of this section, the manufacturer shall take the following actions before the Administrator will consider reinstating the certificate:

(1) Submit a written report to the Administrator which identifies the reason for the noncompliance of the engines, describes the proposed remedy,

including a description of any proposed quality control and/or quality assurance measures to be taken by the manufacturer to prevent future occurrences of the problem, and states the date on which the remedies will be implemented.

(2) Demonstrate that the engine family for which the certificate of conformity has been suspended does in fact comply with these regulations by testing engines selected from normal production runs of that engine family, at the plant(s), port facility(ies) or associated storage facility(ies) specified by the Administrator, in accordance with the conditions specified in the initial test order. If the manufacturer elects to continue testing individual engines after suspension of a certificate, the certificate is reinstated for an engine actually determined to be in conformance with the applicable standards through testing in accordance with the applicable test procedures, provided that the Administrator has not revoked the certificate pursuant to paragraph (f) of this section.

(i) Once the certificate has been revoked for a family and the manufacturer desires to continue introduction into commerce of a modified version of that family, the following actions shall be taken before the Administrator may consider issuing a certificate for that modified family:

(1) If the Administrator determines that the proposed change(s) in engine design may have an effect on emission performance deterioration, the Administrator shall notify the manufacturer, within five working days after receipt of the report in paragraph (f) of this section, whether subsequent testing under this subpart will be sufficient to evaluate the proposed change or changes or whether additional testing will be required; and

(2) After implementing the change or changes intended to remedy the nonconformity, the manufacturer shall demonstrate that the modified engine family does in fact conform with these regulations by testing engines selected from normal production runs of that modified engine family in accordance with the conditions specified in the initial test order. If the subsequent audit results in passing of the audit, the Administrator shall reissue the certificate or issue a new certificate, as the case may be, to include that family, provided that the manufacturer has satisfied the testing requirements of paragraph (i)(1) of this section. If the subsequent audit is failed, the revocation remains in effect. Any design change approvals under this subpart are limited to the family affected by the test order.

(j) At any time subsequent to an initial suspension of a certificate of conformity for a test engine pursuant to paragraph (a) of this section, but not later than 15 days or such other period as may be allowed by the Administrator after notification of the Administrator's decision to suspend or revoke a certificate of conformity in whole or in part pursuant to paragraphs (b), (c), or (f) of this section, a manufacturer may request a hearing as to whether the tests have been properly conducted or any sampling methods have been properly applied.

(k) Any suspension of a certificate of conformity under paragraph (d) of this section shall:

(1) Be made only after the manufacturer concerned has been offered an opportunity for a hearing conducted in accordance with §§ 90.512, 90.513, and 90.514 and

(2) Not apply to engines no longer in the possession of the manufacturer.

(*l*) After the Administrator suspends or revokes a certificate of conformity pursuant to this section and prior to the commencement of a hearing under § 90.512, if the manufacturer demonstrates to the Administrator's satisfaction that the decision to suspend, revoke, or void the certificate was based on erroneous information, the Administrator shall reinstate the certificate.

(m) To permit a manufacturer to avoid storing non-test engines when conducting an audit of a family subsequent to a failure of an SEA and while reauditing the failed family it may request that the Administrator conditionally reinstate the certificate for that family. The Administrator may reinstate the certificate subject to the condition that the manufacturer commits to recall all engines of that family produced from the time the certificate is conditionally reinstated if the family fails the subsequent audit at the level of the standard and to remedy any nonconformity at no expense to the owner.

§ 90.512 Request for public hearing.

(a) If the manufacturer disagrees with the Administrator's decision to suspend, revoke or void a certificate or disputes the basis for an automatic suspension pursuant to § 90.511(a), the manufacturer may request a public hearing.

(b) The manufacturer's request shall be filed with the Administrator not later than 15 days after the Administrator's notification of his or her decision to suspend or revoke, unless otherwise specified by the Administrator. The manufacturer shall simultaneously serve two copies of this request upon the Director of the Manufacturers Operations Division and file two copies with the Hearing Clerk of the Agency. Failure of the manufacturer to request a hearing within the time provided constitutes a waiver of the right to a hearing. Subsequent to the expiration of the period for requesting a hearing as of right, the Administrator may, in his or her discretion and for good cause shown, grant the manufacturer a hearing to contest the suspension or revocation.

(c) A manufacturer shall include in the request for a public hearing:

(1) A statement as to which engine configuration(s) within a family is to be the subject of the hearing;

(2) A concise statement of the issues to be raised by the manufacturer at the hearing, except that in the case of the hearing requested under § 90.511(j), the hearing is restricted to the following issues:

(i) Whether tests have been properly conducted (specifically, whether the tests were conducted in accordance with applicable regulations under this part and whether test equipment was properly calibrated and functioning);

(ii) Whether sampling plans have been properly applied (specifically, whether sampling procedures specified in Appendix A of this subpart were followed and whether there exists a basis for distinguishing engines produced at plants other than the one from which engines were selected for testing which would invalidate the Administrator's decision under § 90.511(c));

(3) A statement specifying reasons why the manufacturer believes it will prevail on the merits of each of the issues raised; and

(4) A summary of the evidence which supports the manufacturer's position on each of the issues raised.

(d) A copy of all requests for public hearings will be kept on file in the Office of the Hearing Clerk and will be made available to the public during Agency business hours.

§ 90.513 Administrative procedures for public hearing.

(a) The Presiding Officer shall be an Administrative Law Judge appointed pursuant to 5 U.S.C. 3105 (see also 5 CFR part 930 as amended).

(b) The Judicial Officer shall be an officer or employee of the Agency appointed as a Judicial Officer by the Administrator, pursuant to this section, who shall meet the qualifications and perform functions as follows:

(1) *Qualifications.* A Judicial Officer may be a permanent or temporary employee of the Agency who performs other duties for the Agency. The Judicial Officer shall not be employed by the Office of Enforcement or have any connection with the preparation or presentation of evidence for a hearing held pursuant to this subpart. The Judicial Officer shall be a graduate of an accredited law school and a member in good standing of a recognized Bar Association of any state or the District of Columbia.

(2) *Functions.* The Administrator may consult with the Judicial Officer or delegate all or part of the Administrator's authority to act in a given case under this section to a Judicial Officer, provided that this delegation does not preclude the Judicial Officer from referring any motion or case to the Administrator when the Judicial Officer determines such referral to be appropriate.

(c) For the purposes of this section, one or more Judicial Officers may be designated. As work requires, a Judicial Officer may be designated to act for the purposes of a particular case.

(d) *Summary decision.* (1) In the case of a hearing requested under § 90.511(j), when it clearly appears from the data and other information contained in the request for a hearing that no genuine and substantial question of fact exists with respect to the issues specified in § 90.512(c)(2), the Administrator shall enter an order denying the request for a hearing and reaffirming the original decision to suspend or revoke a certificate of conformity, if this decision has been made pursuant to § 90.511(e) at any time prior to the decision to deny the request for a hearing.

(2) In the case of a hearing requested under § 90.512 to challenge a proposed suspension of a certificate of conformity for the reasons specified in § 90.511(d), when it clearly appears from the data and other information contained in the request for the hearing that no genuine and substantial question of fact exists with respect to the issue of whether the refusal to comply with the provisions of a test order or any other requirement of § 90.503 was caused by conditions and circumstances outside the control of the manufacturer, the Administrator shall enter an order denying the request for a hearing and suspending the certificate of conformity.

(3) Any order issued under paragraph (d)(1) or (d)(2) of this section has the force and effect of a final decision of the Administrator, as issued pursuant to § 90.515.

(4) If the Administrator determines that a genuine and substantial question of fact does exist with respect to any of the issues referred to in paragraphs (d)(1) and (d)(2) of this section, the Administrator shall grant the request for a hearing and publish a notice of public hearing in the **Federal Register** or by such other means as the Administrator finds appropriate to provide notice to the public.

(e) *Filing and service.* (1) An original and two copies of all documents or papers required or permitted to be filed pursuant to this section and § 90.512(c) must be filed with the Hearing Clerk of the Agency. Filing is considered timely if mailed, as determined by the postmark, to the Hearing Clerk within the time allowed by this section and § 90.512(b). If filing is to be accomplished by mailing, the documents must be sent to the address set forth in the notice of public hearing referred to in paragraph (d)(4) of this section.

(2) To the maximum extent possible, testimony will be presented in written form. Copies of written testimony will be served upon all parties as soon as practicable prior to the start of the hearing. A certificate of service will be provided on or accompany each document or paper filed with the Hearing Clerk. Documents to be served upon the Director of the Manufacturers Operations Division must be sent by registered mail to: Director, Manufacturers Operations Division, U.S. Environmental Protection Agency, 6405–J, 401 M Street S.W., Washington, D.C. 20460. Service by registered mail is complete upon mailing.

(f) *Computation of Time.* (1) In computing any period of time prescribed or allowed by this section, except as otherwise provided, the day of the act or event from which the designated period of time begins to run is not included. Saturdays, Sundays, and federal legal holidays are included in computing the period allowed for the filing of any document or paper, except that when the period expires on a Saturday, Sunday, or federal legal holiday, the period is extended to include the next following business day.

(2) A prescribed period of time within which a party is required or permitted to do an act is computed from the time of service, except that when service is accomplished by mail, three days will be added to the prescribed period.

(g) *Consolidation.* The Administrator or the Presiding Officer in his or her discretion may consolidate two or more proceedings to be held under this section for the purpose of resolving one or more issues whenever it appears that consolidation will expedite or simplify consideration of these issues. Consolidation does not affect the right of any party to raise issues that could have been raised if consolidation had not occurred.

(h) *Hearing Date.* To the extent possible, hearings under § 90.512 will be scheduled to commence within 14 days of receipt of the application in § 90.512.

§ 90.514 Hearing procedures.

The procedures provided in § 86.1014–84 (i) to (s) apply for hearings requested pursuant to § 90.512, suspension, revocation, or voiding of a certificate of conformity.

§ 90.515 Appeal of hearing decision.

The procedures provided in § 86.1014–84 (t) to (aa) apply for appeals filed with respect to hearings held pursuant to § 90.514.

§ 90.516 Treatment of confidential information.

The provisions for treatment of confidential information described in § 90.4 apply to this subpart.

Appendix A to Subpart F—Sampling Plans for Selective Enforcement Auditing of Small Nonroad Engines

TABLE 1.—SAMPLING PLAN CODE LETTER

Annual engine family sales	Code letter
50–99	A
100–299	B
300–499	C
500 or greater	D

TABLE 2.—SAMPLE PLAN FOR CODE LETTER ''A''

[Sample inspection criteria]

Stage	Pass No.	Fail No.	Stage	Pass No.	Fail No.1
1	(1)	(2)	16	6	11
2	(1)	(2)	17	7	12
3	(1)	(2)	18	7	12
4	0	(2)	19	8	13
5	0	(2)	20	8	13
6	1	6	21	9	14
7	1	7	22	10	14
8	2	7	23	10	15
9	2	8	24	11	15
10	3	8	25	11	16
11	3	8	26	12	16
12	4	9	27	12	17
13	5	10	28	13	17
14	5	10	29	14	17
15	6	11	30	16	17

[1] Test sample passing not permitted at this stage.
[2] Test sample failure not permitted at this stage.

TABLE 3.—SAMPLING PLAN FOR CODE LETTER ''B''

[Sample Inspection Criteria]

Stage	Pass No.	Fail No.
1	(1)	(2)
2	(1)	(2)
3	(1)	(2)
4	(1)	(2)
5	0	(2)
6	1	6
7	1	7
8	2	7
9	2	8
10	3	8
11	3	9
12	4	9
13	4	10
14	5	10
15	5	11
16	6	12
17	6	12
18	7	13
19	8	13
10	8	14
21	9	14
22	9	15
23	10	15
24	10	16
25	11	16
26	11	17
27	12	17
28	12	18
29	13	18
30	13	19
31	14	19
32	14	20
33	15	20
34	16	21
35	16	21
36	17	22
37	17	22
38	18	22
39	18	22
40	21	22

[1] Test sample passing not permitted at this stage.
[2] Test sample failure not permitted at this stage.

TABLE 4.—SAMPLING PLAN FOR CODE LETTER ''C''

[Sample Inspection Criteria]

Stage	Pass No.	Fail No.
1	(1)	(2)
2	(1)	(2)
3	(1)	(2)
4	(1)	(2)
5	0	(2)
6	0	6
7	1	7
8	2	7
9	2	8
10	3	9
11	3	9
12	4	10
13	4	10
14	5	11
15	5	11
16	6	12
17	6	12
18	7	13
19	7	13
20	8	14
21	8	14
22	9	15
23	10	15
24	10	16
25	11	16
26	11	17
27	12	17
28	12	18
29	13	18
30	13	19
31	14	19
32	14	20
33	15	20
34	15	21
35	16	21
36	16	22
37	17	22
38	18	23
39	18	23
40	19	24
41	19	24

TABLE 4.—SAMPLING PLAN FOR CODE LETTER ''C''—Continued

[Sample Inspection Criteria]

Stage	Pass No.	Fail No.
42	20	25
43	20	25
44	21	26
45	21	27
46	22	27
47	22	27
48	23	27
49	23	27
50	26	27

[1] Test sample passing not permitted at this stage.
[2] Test sample failure not permitted at this stage.

TABLE 5.—SAMPLING PLAN FOR CODE LETTER ''D''

[Sample Inspection Criteria]

Stage	Pass No.	Fail No.
1	(1)	(2)
2	(1)	(2)
3	(1)	(2)
4	(1)	(2)
5	0	(2)
6	0	6
7	1	7
8	2	8
9	2	8
10	3	9
11	3	9
12	4	10
13	4	10
14	5	11
15	5	11
16	6	12
17	6	12
18	7	13
19	7	13
20	8	14
21	8	14

TABLE 5.—SAMPLING PLAN FOR CODE LETTER ''D''—Continued

[Sample Inspection Criteria]

Stage	Pass No.	Fail No.
22	9	15
23	9	15
24	10	16
25	11	16
26	11	17
27	12	17
28	12	18
29	13	19
30	13	19
31	14	20
32	14	20
33	15	21
34	15	21
35	16	22
36	16	22
37	17	23
38	17	23
39	18	24
40	18	24
41	19	25
42	19	26
43	20	26
44	21	27
45	21	27
46	22	28
47	22	28
48	23	29
49	23	29
50	24	30
51	24	30
52	25	31
53	25	31
54	26	32
55	26	32
56	27	33
57	27	33
58	28	33
59	28	33
60	32	33

[1] Test sample passing not permitted at this stage.

[2] Test sample failure not permitted at this stage.

Subpart G—Importation of Nonconforming Engines

§ 90.601 Applicability.

(a) Except where otherwise indicated, this subpart is applicable to engines and vehicles which are offered for importation or imported into the United States and for which the Administrator has promulgated regulations under subpart B of this part prescribing emission standards, but which are not covered by certificates of conformity issued under section 213 and section 206(a) of the Clean Air Act (that is, which are nonconforming engines as defined below) and under subpart B of this part at the time of importation or conditional importation, as applicable. Compliance with regulations under this subpart shall not relieve any person or entity from compliance with other applicable provisions of the Clean Air Act.

(b) Regulations prescribing further procedures for the importation of small SI engines into the Customs territory of the United States, as defined in 19 U.S.C. 1202, are set forth in U.S. Customs Service regulations.

§ 90.602 Definitions.

The definitions in subpart A of this part apply to this subpart. The following definitions also apply to this subpart.

Certificate of conformity. The document issued by the Administrator under section 213 and section 206(a) of the Act.

Nonconforming engine. An engine which is not covered by a certificate of conformity prior to final or conditional admission (or for which such coverage has not been adequately demonstrated to EPA).

Original engine manufacturer (OEM). The entity which originally manufactured the engine.

Original production (OP) year. The calendar year in which the engine was originally produced by the OEM.

Original production (OP) years old. The age of an engine as determined by subtracting the original production year of the engine from the calendar year of importation.

Production changes. Those changes in the engine configuration, equipment or calibration which are made by an OEM in the course of engine production and required to be reported under § 90.123.

United States. United States includes the Customs territory of the United States as defined in 19 U.S.C. 1202, and the Virgin Islands, Guam, American Samoa and the Commonwealth of the Northern Mariana Islands.

§ 90.603 [Reserved]

§ 90.604 General requirements.

(a) A nonconforming engine offered for importation into the United States may only be imported for purposes other than resale under § 90.611, or under the provisions of § 90.612, provided that an exemption or exclusion is granted by the Administrator.

(b) Final admission shall not be granted unless:

(1) The engine is imported for purposes other than resale under § 90.611; or

(2) The engine is exempted or excluded under § 90.612.

(c) An engine offered for importation may be admitted into the United States. In order to obtain admission, the importer must submit to the Administrator a written request for approval containing the following:

(1) Identification of the importer and the importer's address, telephone number, and taxpayer identification number;

(2) Identification of the engine owner, the owner's address, telephone number, and taxpayer identification number;

(3) Identification of the engine including make, model, identification number, and original production year;

(4) Information indicating under what provision of these regulations the engine is to be imported;

(5) Identification of the place where the subject engine is to be stored until EPA approval of the importer's application to the Administrator for final admission;

(6) Authorization for EPA enforcement officers to conduct inspections or testing otherwise permitted by the Act or regulations thereunder; and

(7) Such other information as is deemed necessary by the Administrator.

§ 90.605–90.610 [Reserved]

§ 90.611 Importation for purposes other than resale.

(a) Any individual may import on a one-time basis three or fewer nonconforming engines for purposes other than resale. Such importation by individuals is permitted without modification to the engines and without prior written approval of EPA. Importations under this provision shall be made by completing such applications as required by the Administrator. Such applications shall contain:

(1) Identification of the importer of the engine and the importer's address, telephone number, and taxpayer identification number;

(2) Identification of the engine owner, the owner's address, telephone number, and taxpayer identification number;

(3) The number of engines imported under § 90.611 by the individual;

(4) A statement that the individual has not previously imported any engines under § 90.611;

(5) A statement that the individual is not importing the engines for the purpose of resale;

(6) For each engine imported, identification of the engine including make, model, identification number, and original production year;

(7) Information indicating under what provision of these regulations the engine is to be imported;

(8) Authorization for EPA enforcement officers to conduct inspections permitted by the Act or regulations thereunder;

(9) Such other information as is deemed necessary by the Administrator.

(b) EPA will not require a U.S. Customs Service bond for a nonconforming engine which is imported under § 90.611.

§ 90.612 Exemptions and exclusions.

(a) Individuals shall be eligible for importing engines into the United States under the provisions of this section, unless otherwise specified.

(b) Notwithstanding other requirements of this subpart, an engine entitled to one of the temporary exemptions of this paragraph may be conditionally admitted into the United States if prior written approval for the conditional admission is obtained from the Administrator. Conditional admission is to be under U.S. Customs Service bond. The Administrator may request that the U.S. Customs Service require a specific bond amount to ensure compliance with the requirements of the Act and this subpart. A written request for approval from the Administrator is to contain the identification required in § 90.604(c) and information that demonstrates that the importer is entitled to the exemption. Noncompliance with provisions of this section may result in the forfeiture of the total amount of the bond or exportation of the engine. The following temporary exemptions are permitted by this paragraph:

(1) *Exemption for repairs or alterations.* Upon written approval by EPA, an owner of engines may conditionally import under bond such engines solely for purpose of repair(s) or alteration(s). The engines may not be operated in the United States other than for the sole purpose of repair or alteration. They may not be sold or leased in the United States and are to be exported upon completion of the repair(s) or alteration(s).

(2) *Testing exemption.* A test engine may be conditionally imported by a person subject to the requirements of § 90.905. A test engine may be operated in the United States provided that the operation is an integral part of the test. This exemption is limited to a period not exceeding one year from the date of importation unless a request is made by the appropriate importer concerning the engine in accordance with § 90.905(f) for a subsequent one-year period.

(3) *Display exemptions.*

(i) An engine intended solely for display may be conditionally imported subject to the requirements of § 90.907.

(ii) A display engine may be imported by any person for purposes related to a business or the public interest. Such purposes do not include collections normally inaccessible or unavailable to the public on a daily basis, display of an engine at a dealership, private use, or other purpose that the Administrator determines is not appropriate for display exemptions. A display engine may not be sold in the United States and may not be operated in the United States except for the operation incident and necessary to the display purpose.

(iii) A temporary display exemption will be granted for 12 months (one year) or for the duration of the display purpose, whichever is shorter. Two extensions of up to 12 months (one year) each are available upon approval by the Administrator. In no circumstances, however, may the total period of exemption exceed 36 months (three years).

(c) Notwithstanding any other requirement of this subpart, an engine may be finally admitted into the United States under this paragraph if prior written approval for such final admission is obtained from the Administrator. Conditional admission of these engines under this subpart is not permitted for the purpose of obtaining such written approval from the Administrator. A request for approval is to contain the identification information required in § 90.604(c) and information that demonstrates that the importer is entitled to the exemption or exclusion. The following exemptions or exclusions are permitted by this paragraph:

(1) *National security exemption.* An engine may be imported under the national security exemption found at § 90.908.

(2) *Hardship exemption.* The Administrator may exempt on a case-by-case basis an engine from federal emission requirements to accommodate unforeseen cases of extreme hardship or extraordinary circumstances.

(3) *Exemption for engines identical to United States certified versions.*

(i) A person (including businesses) is eligible for importing an engine into the United States under the provisions of this paragraph. An exemption will be granted if the engine:

(A) is owned by the importer;

(B) is not offered for importation for the purpose of resale; and

(C) is proven to be identical, in all material respects, to an engine certified by the original equipment manufacturer (OEM) for sale in the United States or is proven to have been modified to be identical, in all material respects, to an engine certified by the OEM for sale in the United States according to complete written instructions provided by the OEM's United States representative, or his/her designee.

(ii) *Proof of Conformity.* (A) Documentation submitted pursuant to this section for the purpose of proving conformity of individual engines is to contain sufficiently organized data or evidence demonstrating that the engine identified pursuant to § 90.604(c) is identical, in all material respects, to an engine identified in an OEM's application for certification.

(B) If the documentation does not contain all the information required by this part, or is not sufficiently organized, EPA will notify the importer of any areas of inadequacy, and that the documentation will not receive further consideration until the required information or organization is provided.

(C) If EPA determines that the documentation does not clearly or sufficiently demonstrate that an engine is eligible for importation, EPA will notify the importer in writing.

(D) If EPA determines that the documentation clearly and sufficiently demonstrates that an engine is eligible for importation, EPA will grant approval for importation and notify the importer in writing.

(d) Foreign diplomatic and military personnel may import a nonconforming engine without bond. At the time of admission, the importer shall submit to the Administrator the written report required in § 90.604(a) and a statement from the U.S. Department of State confirming qualification for this exemption. Foreign military personnel may, in lieu of a statement from the U.S. Department of State, submit to the Administrator a copy of their orders for duty in the United States. The engine may not be sold in the United States and must be exported if the individual's diplomatic status is no longer applicable, as determined by the Department of State, or the foreign military orders for duty in the United States are no longer applicable, unless subsequently brought into conformity with U.S. emission requirements.

(e) *Competition exclusion.* A nonconforming engine may be conditionally admitted by any person provided the importer demonstrates to the Administrator that the engine is used to propel a nonroad vehicle used solely for competition and obtains prior written approval from the Administrator. A nonconforming engine imported pursuant to this paragraph may not be operated in the United States except for that operation incident and necessary for the competition purpose, unless subsequently brought into conformity with United States emission requirements in accordance with § 90.612(c)(3).

(f) *Exclusions/exemptions based on date of original manufacture.*

(1) Notwithstanding any other requirements of this subpart, engines

originally manufactured prior to model year 1997 are excluded from the requirements of the Act in accordance with section 213 of the Act and may be imported by any person.

(2) Notwithstanding other requirements of this subpart, an engine not subject to an exclusion under § 90.612(f)(1) but greater than 20 original production (OP) years old is entitled to an exemption from the requirements of the Act, provided that it has not been modified in those 20 OP years. At the time of admission, the importer shall submit to the Administrator the written report required in § 90.604(c).

(g) An application for exemption and exclusion provided for in paragraphs (b), (c), and (e) of this section is to be mailed to: U.S. Environmental Protection Agency, Office of Mobile Sources, Manufacturers Operations Division (6405–J), 401 M Street, S.W., Washington, D.C. 20460, Attention: Imports.

§ 90.613 Prohibited acts; penalties.

(a) The importation of an engine which is not covered by a certificate of conformity other than in accordance with this subpart and the entry regulations of the U.S. Customs Service is prohibited. Failure to comply with this subpart is a violation of section 213(d) and section 203 of the Act.

(b) Unless otherwise permitted by this subpart, during a period of conditional admission, the importer of an engine shall not:

(1) Register, license, or operate the engine in the United States; or

(2) Sell or offer the engine for sale.

(c) An engine conditionally admitted pursuant to § 90.612(b), (d), or (e) and not granted final admission within the period of time specified for such conditional admission in the written prior approval obtained from EPA, or within such additional time as designated by the Administrator, is deemed to be unlawfully imported into the United States in violation of section 213(d) and section 203 of the Act, unless the engine has been delivered to the U.S. Customs Service for export or other disposition under applicable Customs laws and regulations. An engine not so delivered is subject to seizure by the U.S. Customs Service.

(d) An importer who violates section 213(d) and section 203 of the Act is subject to a civil penalty under section 205 of the Act of not more than $25,000 for each engine subject to the violation. In addition to the penalty provided in the Act, where applicable, under the exemption provisions of § 90.612(b), a person or entity who fails to deliver the engine to the U.S. Customs Service is liable for liquidated damages in the amount of the bond required by applicable Customs laws and regulations.

§ 90.614 Treatment of confidential information.

The provisions for treatment of confidential information described in § 90.4 apply to this subpart.

Subpart H—[Reserved]

Subpart I—Emission-related Defect Reporting Requirements, Voluntary Emission Recall Program

§ 90.801 Applicability.

The requirements of subpart I are applicable to all nonroad engines and vehicles subject to the provisions of subpart A of part 90. The requirement to report emission-related defects affecting a given class or category of engines will remain applicable for five years from the end of the calendar year in which such engines were manufactured.

§ 90.802 Definitions.

The definitions in subpart A of this part apply to this subpart. All terms not defined herein or in subpart A have the meaning given them in the Act.

Emission-related defect means a defect in design, materials, or workmanship in a device, system, or assembly described in the approved application for certification which affects any applicable parameter or specification enumerated in 40 CFR part 85, Appendix VIII.

Voluntary emission recall means a repair, adjustment, or modification program voluntarily initiated and conducted by a manufacturer to remedy any emission-related defect for which notification of engine owners has been provided.

§ 90.803 Emission defect information report.

(a) A manufacturer must file a defect information report whenever, on the basis of data obtained subsequent to the effective date of these regulations:

(1) The manufacturer determines, in accordance with procedures established by the manufacturer to identify either safety-related or performance defects, that a specific emission-related defect exists; and

(2) A specific emission-related defect exists in 25 or more engines of a given engine family manufactured in the same certificate or model year.

(b) No report must be filed under this section for any emission-related defect corrected prior to the sale of the affected engines to ultimate purchasers.

(c) The manufacturer must submit defect information reports to EPA's Manufacturers Operations Division not more than 15 working days after an emission-related defect is found to affect 25 engines in a given engine family manufactured in the same certificate or model year. Information required by paragraph (d) of this section that is either not available within 15 working days or is significantly revised must be submitted to EPA's Manufacturers Operations Division as it becomes available.

(d) Each defect report must contain the following information in substantially the format outlined below:

(1) The manufacturer's corporate name.

(2) A description of the defect.

(3) A description of each class or category of engines potentially affected by the defect including make, model, model year, calendar year produced, and any other information required to identify the engines affected.

(4) For each class or category of engine described in response to paragraph (d)(3) of this section, the following must also be provided:

(i) The number of engines known or estimated to have the defect and an explanation of the means by which this number was determined.

(ii) The address of the plant(s) at which the potentially defective engines were produced.

(5) An evaluation of the emissions impact of the defect and a description of any operational problems which a defective engine might exhibit.

(6) Available emission data which relate to the defect.

(7) An indication of any anticipated manufacturer follow-up.

§ 90.804 Voluntary emissions recall.

(a) When any manufacturer initiates a voluntary emissions recall campaign involving 25 or more engines, the manufacturer must submit a report describing the manufacturer's voluntary emissions recall plan as prescribed by this section within 15 working days of the date owner notification was begun. The report must contain the following:

(1) A description of each class or category of engines recalled including the number of engines to be recalled, the model year, the make, the model, and such other information as may be required to identify the engines recalled;

(2) A description of the specific modifications, alterations, repairs, corrections, adjustments, or other changes to be made to correct the engines affected by the emission-related defect;

(3) A description of the method by which the manufacturer will notify engine owners and, if applicable, the method by which the manufacturer will determine the names and addresses of engine owners;

(4) A description of the proper maintenance or use, if any, upon which the manufacturer conditions eligibility for repair under the recall plan, an explanation of the manufacturer's reasons for imposing any such conditions, and a description of the proof to be required of an engine owner to demonstrate compliance with any such conditions;

(5) A description of the procedure to be followed by engine owners to obtain correction of the nonconformity. This may include designation of the date on or after which the owner can have the nonconformity remedied, the time reasonably necessary to perform the labor to remedy the defect, and the designation of facilities at which the defect can be remedied;

(6) A description of the class of persons other than dealers and authorized warranty agents of the manufacturer who will remedy the defect;

(7) When applicable, three copies of any letters of notification to be sent engine owners;

(8) A description of the system by which the manufacturer will assure that an adequate supply of parts is available to perform the repair under the plan, and that the supply remains both adequate and responsive to owner demand;

(9) Three copies of all necessary instructions to be sent to those persons who are to perform the repair under the recall plan;

(10) A description of the impact of the proposed changes on fuel consumption, performance, and safety of each class or category of engines to be recalled;

(11) A sample of any label to be applied to engines which participated in the voluntary recall campaign.

(b) The manufacturer must submit at least one report on the progress of the recall campaign. Such report must be submitted no later than 18 months from the date notification was begun and include the following information:

(1) The methods used to notify both engine owners, dealers and other individuals involved in the recall campaign;

(2) The number of engines known or estimated to be affected by the emission-related defect and an explanation of the means by which this number was determined;

(3) The number of engines actually receiving repair under the plan; and

(4) The number of engines determined to be ineligible for remedial action due to a failure to properly maintain or use such engines.

§ 90.805 Reports, voluntary recall plan filing, record retention.

(a) Send the defect report, voluntary recall plan, and the voluntary recall progress report to: Director, Manufacturers Operations Division, Environmental Protection Agency, 401 M St. S.W., Washington, D.C. 20460.

(b) Retain the information gathered by the manufacturer to compile the reports for not less than five years from the date of the manufacture of the engines. The manufacturer must make this information available to duly authorized officials of the EPA upon request.

§ 90.806 Responsibility under other legal provisions preserved.

The filing of any report under the provisions of this subpart does not affect a manufacturer's responsibility to file reports or applications, obtain approval, or give notice under any provision of law.

§ 90.807 Disclaimer of production warranty applicability.

(a) The act of filing an Emission Defect Information Report is inconclusive as to the existence of a defect subject to the warranty provided by subpart L of this part.

(b) A manufacturer may include on each page of its Emission Defect Information Report a disclaimer stating that the filing of a Defect Information Report pursuant to these regulations is not conclusive as to the applicability of the warranty provided by subpart L of this part.

Subpart J—Exclusion and Exemption of Nonroad Engines from Regulations

§ 90.901 Applicability.

The requirements of subpart J are applicable to all nonroad engines and vehicles subject to the provisions of subpart A of part 90.

§ 90.902 Definitions.

The definitions in subpart A of this part apply to this subpart. The following definitions also apply to this subpart:

Exemption means exemption from the prohibitions of § 90.1003.

Export exemption means an exemption granted under § 90.1004(b) for the purpose of exporting new nonroad engines.

National security exemption means an exemption granted under § 90.1004(b) for the purpose of national security.

Manufacturer-owned nonroad engine means an uncertified nonroad engine owned and controlled by a nonroad engine manufacturer and used in a manner not involving lease or sale by itself or in a vehicle employed from year to year in the ordinary course of business for product development, production method assessment, and market promotion purposes.

Testing exemption means an exemption granted under § 90.1004(b) for the purpose of research, investigations, studies, demonstrations or training, but not including national security.

§ 90.903 Exclusions, application of section 216(10) of the Act.

(a) For the purpose of determining the applicability of section 216(10) of the Act, an internal combustion engine (including the fuel system) that is not used in a motor vehicle is deemed a nonroad engine, if it meets the definition in subpart A of this part. For the purpose of determining the applicability of section 216(11) of the Act, a vehicle powered by a nonroad engine is deemed a nonroad vehicle, if it meets the definition in subpart A of this part. Nonroad engines and nonroad vehicles do not include features ordinarily associated with military combat such as armor and/or weaponry.

(b) EPA will maintain a list of nonroad engines that have been determined to be excluded because they are used solely for competition or for combat. This list will be available to the public and may be obtained by writing to the following address: Chief, Manufacturers Programs Branch, Manufacturers Operations Division (6405–J), Environmental Protection Agency, 401 M Street, S.W., Washington, D.C. 20460.

(c) Upon written request, EPA will make written determinations as to whether certain engines are or are not nonroad engines. Engines that are determined not to be nonroad engines are excluded from regulations under this part.

§ 90.904 Who may request an exemption.

(a) Any person may request a testing exemption under § 90.905.

(b) Any nonroad engine manufacturer may request a national security exemption under § 90.908.

(c) For nonroad engine manufacturers, nonroad engines manufactured for export purposes are exempt without application, subject to the provisions of § 90.909.

(d) For eligible manufacturers, as determined by § 90.906, manufacturer-owned nonroad engines are exempt without application, subject to the provisions of § 90.906.

(e) For any person, display nonroad engines are exempt without application, subject to the provisions of § 90.907.

§ 90.905 Testing exemption.

(a) Any person requesting a testing exemption must demonstrate the following:

(1) That the proposed test program has a purpose which constitutes an appropriate basis for an exemption in accordance with § 90.1004(b), and in accordance with subsection (b) of this section;

(2) That the proposed test program necessitates the granting of an exemption, in accordance with subsection (c) of this section;

(3) That the proposed test program exhibits reasonableness in scope, in accordance with subsection (d) of this section; and

(4) That the proposed test program exhibits a degree of control consonant with the purpose of the program and EPA's monitoring requirements, in accordance with subsection (e) of this section.

(b) With respect to the purpose of the proposed test program, an appropriate purpose would be research, investigations, studies, demonstrations, or training, but not national security. A concise statement of purpose is a required item of information.

(c) With respect to the necessity that an exemption be granted, necessity arises from an inability to achieve the stated purpose in a practicable manner without performing or causing to be performed one or more of the prohibited acts under § 90.1003. In appropriate circumstances, time constraints may be a sufficient basis for necessity, but the cost of certification alone, in the absence of extraordinary circumstances, is not a basis for necessity.

(d) With respect to reasonableness, a test program must exhibit a duration of reasonable length and affect a reasonable number of engines. In this regard, required items of information include:

(1) An estimate of the program's duration; and

(2) The maximum number of nonroad engines involved.

(e) With respect to control, the test program must incorporate procedures consistent with the purpose of the test and be capable of affording EPA monitoring capability. As a minimum, required items of information include:

(1) The technical nature of the test;

(2) The site of the test;

(3) The duration and accumulated engine operation associated with the test;

(4) The ownership arrangement with regard to the engines involved in the test;

(5) The intended final disposition of the engines;

(6) The manner in which the engines used in the test will be identified, and that identification recorded, and made available; and

(7) The means or procedure whereby test results will be recorded.

(f) A manufacturer of new nonroad engines may request a testing exemption to cover nonroad engines intended for use in test programs planned or anticipated over the course of a subsequent one-year period. Unless otherwise required by the Director, Manufacturers Operations Division, a manufacturer requesting such an exemption need only furnish the information required by paragraphs (a)(1) and (d)(2) of this section along with a description of the recordkeeping and control procedures that will be employed to assure that the engines are used for purposes consistent with § 90.1004(b).

§ 90.906 Manufacturer-owned exemption and precertification exemption.

(a) Except as provided in paragraph (b) of this section, any manufacturer-owned nonroad engine, as defined by § 90.902, is exempt from § 90.1003, without application, if the manufacturer complies with the following terms and conditions:

(1) The manufacturer must establish, maintain, and retain the following adequately organized and indexed information on each exempted engine:

(i) Engine identification number;

(ii) Use of the engine on exempt status; and

(iii) Final disposition of any engine removed from exempt status.

(2) The manufacturer must provide right of entry and access to these records to EPA authorized representatives as required by § 90.506.

(3) Unless the requirement is waived or an alternative procedure is approved by the Director, Manufacturers Operations Division, the manufacturer must permanently affix a label to each nonroad engine on exempt status. This label should:

(i) Be affixed in a readily visible portion of the engine;

(ii) Be attached in such a manner that it cannot be removed without destruction or defacement;

(iii) State in the English language and in block letters and numerals of a color that contrasts with the background of the label, the following information:

(A) The label heading ''Emission Control Information;''

(B) Full corporate name and trademark of manufacturer;

(C) Engine displacement, engine family identification, and model year of engine; or person or office to be contacted for further information about the engine;

(D) The statement ''This nonroad engine is exempt from the prohibitions of 40 CFR 90.1003.''

(4) No provision of paragraph (a)(3) of this section prevents a manufacturer from including any other information it desires on the label.

§ 90.907 Display exemption.

Where an uncertified nonroad engine is a display engine to be used solely for display purposes, will only be operated incident and necessary to the display purpose, and will not be sold unless an applicable certificate of conformity has been received or the engine has been finally admitted pursuant to subpart G of this part, no request for exemption of the engine is necessary.

§ 90.908 National security exemption.

A manufacturer requesting a national security exemption must state the purpose for which the exemption is required and the request must be endorsed by an agency of the federal government charged with responsibility for national defense.

§ 90.909 Export exemptions.

(a) A new nonroad engine intended solely for export, and so labeled or tagged on the outside of the container and on the engine itself, is subject to the provisions of § 90.1003, unless the importing country has new nonroad engine emission standards which differ from EPA standards.

(b) For the purpose of paragraph (a) of this section, a country having no standards, whatsoever, is deemed to be a country having emission standards which differ from EPA standards.

(c) EPA will maintain a list of foreign countries that have in force nonroad emission standards identical to U.S. EPA standards and have so notified EPA. This list may be obtained by writing to the following address: Chief, Manufacturers Programs Branch, Manufacturers Operations Division (6405–J), Environmental Protection Agency, 401 M Street, S.W., Washington, D.C. 20460. New nonroad engines exported to such countries must comply with U.S. EPA certification regulations.

(d) It is a condition of any exemption for the purpose of export under § 90.1004(b) that such exemption be void ab initio with respect to a new nonroad engine intended solely for

export if such nonroad engine is sold, or offered for sale, to an ultimate purchaser in the United States for purposes other than export.

§ 90.910 Granting of exemptions.

(a) If upon completion of the review of an exemption request made pursuant to § 90.905 or § 90.908, EPA determines it is appropriate to grant such an exemption, a memorandum of exemption is to be prepared and submitted to the person requesting the exemption. The memorandum is to set forth the basis for the exemption, its scope, and such terms and conditions as are deemed necessary. Such terms and conditions generally include, but are not limited to, agreements by the applicant to conduct the exempt activity in the manner described to EPA, create and maintain adequate records accessible to EPA at reasonable times, employ labels for the exempt engines setting forth the nature of the exemption, take appropriate measures to assure that the terms of the exemption are met, and advise EPA of the termination of the activity and the ultimate disposition of the engines.

(b) Any exemption granted pursuant to paragraph (a) of this section is deemed to cover any subject engine only to the extent that the specified terms and conditions are complied with. A breach of any term or condition causes the exemption to be void ab initio with respect to any engine. Consequently, the causing or the performing of an act prohibited under § 90.1003(a) (1) or (3), other than in strict conformity with all terms and conditions of this exemption, renders the person to whom the exemption is granted, and any other person to whom the provisions of § 90.1003 are applicable, liable to suit under sections 204 and 205 of the Act.

§ 90.911 Submission of exemption requests.

Requests for exemption or further information concerning exemptions and/or the exemption request review procedure should be addressed to: Chief, Manufacturers Programs Branch, Manufacturers Operations Division (6405–J), Environmental Protection Agency, 401 M Street, SW., Washington, DC 20460.

§ 90.912 Treatment of confidential information.

The provisions for treatment of confidential information described in § 90.4 apply to this subpart.

Subpart K—Prohibited Acts and General Enforcement Provisions

§ 90.1001 Applicability.

The requirements of subpart K are applicable to all nonroad engines and vehicles subject to the provisions of subpart A of part 90.

§ 90.1002 Definitions.

The definitions in subpart A of this part apply to this subpart. All terms not defined herein or in subpart A have the meaning given them in the Act.

§ 90.1003 Prohibited acts.

(a) The following acts and the causing thereof are prohibited:

(1)(i) In the case of a manufacturer of new nonroad engines or vehicles for distribution in commerce, the sale, the offering for sale, or the introduction, or delivery for introduction, into commerce, of any new nonroad engine manufactured after the applicable effective date under this part unless such engine is covered by a certificate of conformity issued (and in effect) under regulations found in this part.

(ii) In the case of any person, except as provided by regulation of the Administrator, the importation into the United States of any new nonroad engine manufactured after the applicable effective date under this part unless such engine is covered by a certificate of conformity issued (and in effect) under regulations found in this part.

(2)(i) For a person to fail or refuse to permit access to or copying of records or to fail to make reports or provide information required under § 90.1004.

(ii) For a person to fail or refuse to permit entry, testing or inspection authorized under §§ 90.126, 90.506 or 90.1004.

(iii) For a person to fail or refuse to perform tests, or to have tests performed as required under §§ 90.119, 90.504 or 90.1004.

(iv) For a person to fail to establish or maintain records as required under § 90.1004.

(3)(i) For a person to remove or render inoperative a device or element of design installed on or in a nonroad engine in compliance with regulations under this part prior to its sale and delivery to the ultimate purchaser, or for a person knowingly to remove or render inoperative such a device or element of design after the sale and delivery to the ultimate purchaser; or

(ii) For a person to manufacture, sell or offer to sell, or install, a part or component intended for use with, or as part of, a nonroad engine, where a principal effect of the part or component is to bypass, defeat, or render inoperative a device or element of design installed on or in a nonroad engine in compliance with regulations issued under this part, and where the person knows or should know that the part or component is being offered for sale or installed for this use or put to such use.

(4) For a manufacturer of a new nonroad engine subject to standards prescribed under this part:

(i) To sell, offer for sale, or introduce or deliver into commerce, a nonroad engine unless the manufacturer has complied with the requirements of § 90.1102.

(ii) To sell, offer for sale, or introduce or deliver into commerce, a nonroad engine unless a label or tag is affixed to the engine in accordance with regulations under this part.

(iii) To provide directly or indirectly in any communication to the ultimate purchaser or a subsequent purchaser that the coverage of a warranty under the Act is conditioned upon use of a part, component, or system manufactured by the manufacturer or a person acting for the manufacturer or under its control, or conditioned upon service performed by such persons, except as provided in subpart L of this part.

(iv) To fail or refuse to comply with the terms and conditions of the warranty under subpart L of this part.

(5) For a manufacturer of new nonroad vehicles to distribute in commerce, sell, offer for sale, or introduce into commerce, nonroad vehicles which contain an engine not covered by a certificate of conformity (except as specified in paragraph (b)(4) of this section) or which contain a handheld engine in a nonhandheld vehicle.

(6) For a person to circumvent or attempt to circumvent the residence time requirements of Paragraph (a)(2)(iii) of this Section of the nonroad engine definition in § 90.3.

(b) For the purposes of enforcement of this part, the following apply:

(1) Nothing in paragraph (a) of this section is to be construed to require the use of manufacturer parts in maintaining or repairing a nonroad engine.

(2) Actions for the purpose of repair or replacement of a device or element of design or any other item are not considered prohibited acts under § 90.1003(a) if the actions are a necessary and temporary procedure, the device or element is replaced upon completion of the procedure, and the action results in the proper functioning of the device or element of design.

(3) Actions for the purpose of a conversion of a nonroad engine for use of a clean alternative fuel (as defined in Title II of the Act) are not considered prohibited acts under § 90.1003(a) if:

(i) The vehicle complies with the applicable standard when operating on the alternative fuel, and the device or element is replaced upon completion of the conversion procedure, and

(ii) In the case of engines converted to dual fuel or flexible use, the action results in proper functioning of the device or element when the nonroad engine operates on conventional fuel.

(4) Certified nonroad engines shall be used in all vehicles that are self-propelled, portable, transportable, or are intended to be propelled while performing their function unless the manufacturer of the vehicle can prove that the vehicle will be used in a manner consistent with paragraph (2) of the definition of nonroad engine in § 90.3 of this part. Nonroad vehicle manufacturers may continue to use noncertified nonroad engines built prior to the effective date until noncertified engine inventories are depleted; however, stockpiling (i.e., build up of an inventory of engines outside of normal business practices) of noncertified nonroad engines will be considered a violation of this section.

§ 90.1004 General enforcement provisions.

(a) *Information collection provisions.* (1) Every manufacturer of new nonroad engines and other persons subject to the requirements of this part must establish and maintain records, perform tests where such testing is not otherwise reasonably available under this part, make reports and provide information the Administrator may reasonably require to determine whether the manufacturer or other person has acted or is acting in compliance with this part or to otherwise carry out the provisions of this part, and must, upon request of an officer or employee duly designated by the Administrator, permit the officer or employee at reasonable times to have access to and copy such records. The manufacturer shall comply in all respects with the requirements of subpart I of this part.

(2) For purposes of enforcement of this part, an officer or employee duly designated by the Administrator, upon presenting appropriate credentials, is authorized:

(i) To enter, at reasonable times, any establishment of the manufacturer, or of any person whom the manufacturer engaged to perform any activity required under paragraph (a)(1) of this section, for the purposes of inspecting or observing any activity conducted pursuant to paragraph (a)(1) of this section; and

(ii) To inspect records, files, papers, processes, controls, and facilities used in performing an activity required by paragraph (a)(1) of this section, by the manufacturer or by a person whom the manufacturer engaged to perform the activity.

(b) *Exemption provision.* The Administrator may exempt a new nonroad engine from § 90.1003 upon such terms and conditions as the Administrator may find necessary for the purpose of export, research, investigations, studies, demonstrations, or training, or for reasons of national security.

(c) *Importation provision.* (1) A new nonroad engine or vehicle offered for importation or imported by a person in violation of § 90.1003 is to be refused admission into the United States, but the Secretary of the Treasury and the Administrator may, by joint regulation, provide for deferring a final determination as to admission and authorizing the delivery of such a nonroad engine offered for import to the owner or consignee thereof upon such terms and conditions (including the furnishing of a bond) as may appear to them appropriate to insure that the nonroad engine will be brought into conformity with the standards, requirements, and limitations applicable to it under this part.

(2) If a nonroad engine is finally refused admission under this paragraph, the Secretary of the Treasury shall cause disposition thereof in accordance with the customs laws unless it is exported, under regulations prescribed by the Secretary, within 90 days of the date of notice of the refusal or additional time as may be permitted pursuant to the regulations.

(3) Disposition in accordance with the customs laws may not be made in such manner as may result, directly or indirectly, in the sale, to the ultimate purchaser, of a new nonroad engine that fails to comply with applicable standards of the Administrator under this part.

(d) *Export provision.* A new nonroad engine intended solely for export, and so labeled or tagged on the outside of the container and on the engine itself, shall be subject to the provisions of § 90.1003, except that if the country that is to receive the engine has emission standards that differ from the standards prescribed under subpart B of this part, then the engine must comply with the standards of the country that is to receive the engine.

§ 90.1005 Injunction proceedings for prohibited acts.

(a) The district courts of the United States have jurisdiction to restrain violations of § 90.1003.

(b) Actions to restrain such violations must be brought by and in the name of the United States. In an action, subpoenas for witnesses who are required to attend a district court in any district may run into any other district.

§ 90.1006 Penalties.

(a) *Violations.* A violation of the requirements of this subpart is a violation of the applicable provisions of the Act and is subject to the penalty provisions thereunder.

(1) A person who violates § 90.1003(a)(1), (a)(4), or (a)(5), or a manufacturer or dealer who violates § 90.1003(a)(3)(i), is subject to a civil penalty of not more than $25,000 for each violation.

(2) A person other than a manufacturer or dealer who violates § 90.1003(a)(3)(i) or any person who violates § 90.1003(a)(3)(ii) is subject to a civil penalty of not more than $2,500 for each violation.

(3) A violation with respect to § 90.1003(a)(1), (a)(3)(i), (a)(4), or (a)(5) constitutes a separate offense with respect to each nonroad engine.

(4) A violation with respect to § 90.1003(a)(3)(ii) constitutes a separate offense with respect to each part or component. Each day of a violation with respect to § 90.1003(a)(6) constitutes a separate offense.

(5) A person who violates § 90.1003(a)(2) or (a)(6) is subject to a civil penalty of not more than $25,000 per day of violation.

(b) *Civil actions.* The Administrator may commence a civil action to assess and recover any civil penalty under paragraph (a) of this section.

(1) An action under this paragraph may be brought in the district court of the United States for the district in which the violation is alleged to have occurred, the defendant resides, or the Administrator's principal place of business is located, and in which the court has jurisdiction to assess a civil penalty.

(2) In determining the amount of a civil penalty to be assessed under this paragraph, the court is to take into account the gravity of the violation, the economic benefit or savings (if any) resulting from the violation, the size of the violator's business, the violator's history of compliance with Title II of the Act, action taken to remedy the violation, the effect of the penalty on the violator's ability to continue in

business, and such other matters as justice may require.

(3) In any such action, subpoenas for witnesses who are required to attend a district court in any district may run into any other district.

(c) *Administrative assessment of certain penalties.* (1) *Administrative penalty authority.* In lieu of commencing a civil action under paragraph (b) of this section, the Administrator shall assess any civil penalty prescribed in paragraph (a) of this section, except that the maximum amount of penalty sought against each violator in a penalty assessment proceeding can not exceed $200,000, unless the Administrator and the Attorney General jointly determine that a matter involving a larger penalty amount is appropriate for administrative penalty assessment. Any such determination by the Administrator and the Attorney General is not subject to judicial review. Assessment of a civil penalty is made by an order made on the record after opportunity for a hearing held in accordance with the procedures found at part 22 of this chapter. The Administrator may compromise, or remit, with or without conditions, any administrative penalty which may be imposed under this section.

(2) *Determining amount.* In determining the amount of any civil penalty assessed under this subsection, the Administrator is to take into account the gravity of the violation, the economic benefit or savings (if any) resulting from the violation, the size of the violator's business, the violator's history of compliance with Title II of the Act, action taken to remedy the violation, the effect of the penalty on the violator's ability to continue in business, and such other matters as justice may require.

(3) *Effect of administrator's action.* (i) Action by the Administrator under this paragraph does not affect or limit the Administrator's authority to enforce any provisions of this part; except that any violation with respect to which the Administrator has commenced and is diligently prosecuting an action under this part, or for which the Administrator has issued a final order not subject to further judicial review and for which the violator has paid a penalty assessment under this part may not be the subject of a civil penalty action under paragraph (b) of this section.

(ii) No action by the Administrator under this part affects a person's obligation to comply with a section of this part.

(4) *Finality of order.* An order issued under this part becomes final 30 days after its issuance unless a petition for judicial review is filed under paragraph (c)(5) of this section.

(5) *Judicial review.* (i) A person against whom a civil penalty is assessed in accordance with this part may seek review of the assessment in the United States District Court for the District of Columbia or for the district in which the violation is alleged to have occurred, in which such person resides, or where the person's principle place of business is located, within the 30-day period beginning on the date a civil penalty order is issued. The person must simultaneously send a copy of the filing by certified mail to the Administrator and the Attorney General.

(ii) The Administrator must file in the court within 30 days a certified copy, or certified index, as appropriate, of the record on which the order was issued. The court is not to set aside or remand any order issued in accordance with the requirements of this paragraph unless substantial evidence does not exist in the record, taken as a whole, to support the finding of a violation or unless the Administrator's assessment of the penalty constitutes an abuse of discretion, and the court is not to impose additional civil penalties unless the Administrator's assessment of the penalty constitutes an abuse of discretion. In any proceedings, the United States may seek to recover civil penalties assessed under this section.

(6) *Collection.* (i) If any person fails to pay an assessment of a civil penalty imposed by the Administrator as provided in this part after the order making the assessment has become final or after a court in an action brought under paragraph (c)(5) of this section has entered a final judgment in favor of the Administrator, the Administrator is to request that the Attorney General bring a civil action in an appropriate district court to recover the amount assessed (plus interest at rates established pursuant to section 6621(a)(2) of the Internal Revenue Code of 1986 from the date of the final order or the date of final judgment, as the case may be). In such an action, the validity, amount, and appropriateness of the penalty are not subject to review.

(ii) A person who fails to pay on a timely basis the amount of an assessment of a civil penalty as described in paragraph (c)(6)(i) of this section is required to pay, in addition to that amount and interest, the United States' enforcement expenses, including attorney's fees and costs for collection proceedings, and a quarterly nonpayment penalty for each quarter during which the failure to pay persists. The nonpayment penalty is an amount equal to 10 percent of the aggregate amount of that person's penalties and nonpayment penalties which are unpaid as of the beginning of such quarter.

Subpart L—Emission Warranty and Maintenance Instructions

§ 90.1101 Applicability.

The requirements of subpart L are applicable to all nonroad engines and vehicles subject to the provisions of subpart A of part 90.

§ 90.1102 Definitions.

The definitions of subpart A of this part apply to this subpart.

§ 90.1103 Emission warranty, warranty period.

(a) Warranties imposed by this subpart shall be for the first two years of engine use from the date of sale to the ultimate purchaser.

(b) The manufacturer of each new nonroad engine must warrant to the ultimate purchaser and each subsequent purchaser that the engine is designed, built, and equipped so as to conform at the time of sale with applicable regulations under section 213 of the Act, and the engine is free from defects in materials and workmanship which cause such engine to fail to conform with applicable regulations for its warranty period.

(c) In the case of a nonroad engine part, the manufacturer or rebuilder of the part may certify according to § 85.2112 of this chapter that use of the part will not result in a failure of the engine to comply with emission standards promulgated in this part.

(d) For the purposes of this section, the owner of any nonroad engine warranted under this part is responsible for the proper maintenance of the engine as stated in the manufacturer's written instructions. Proper maintenance generally includes replacement and service, at the owner's expense at a service establishment or facility of the owner's choosing, such items as spark plugs, points, condensers, and any other part, item, or device related to emission control (but not designed for emission control) under the terms of the last sentence of section 207(a)(3) of the Act, unless such part, item, or device is covered by any warranty not mandated by this Act.

§ 90.1104 Furnishing of maintenance instructions to ultimate purchaser.

(a) The manufacturer must furnish or cause to be furnished to the ultimate purchaser of each new nonroad engine written instructions for the maintenance needed to assure proper functioning of the emission control system.

(b) The manufacturer must provide in boldface type on the first page of the written maintenance instructions notice that maintenance, replacement, or repair of the emission control devices and systems may be performed by any nonroad engine repair establishment or individual.

(c) The instructions under paragraph (b) of this section will not include any condition on the ultimate purchaser's using, in connection with such engine, any component or service (other than a component or service provided without charge under the terms of the purchase agreement) which is identified by brand, trade, or corporate name. Such instructions also will not directly or indirectly distinguish between service performed by the franchised dealers of such manufacturer or any other service establishments with which such manufacturer has a commercial relationship and service performed by independent nonroad engine repair facilities with which such manufacturer has no commercial relationship.

(d) The prohibition of paragraph (c) of this section may be waived by the Administrator if:

(1) The manufacturer satisfies the Administrator that the engine will function properly only if the component or service so identified is used in connection with such engine; and

(2) The Administrator finds that such a waiver is in the public interest.

[FR Doc. 95–14221 Filed 6–30–95; 8:45 am]

BILLING CODE 6560–50–P

federal register

Monday
July 3, 1995

Part III

Department of Housing and Urban Development

Office of the Assistant Secretary for Public and Indian Housing

24 CFR Part 882 et al.

Conforming Section 8 Certificate and Voucher Programs; Final Rule

Office of Administration

Submission of Proposed Information Collection to OMB; Notice

DEPARTMENT OF HOUSING AND URBAN DEVELOPMENT

Office of the Assistant Secretary for Public and Indian Housing

24 CFR Parts 882, 887, 982, and 983

[Docket No. R–95–1628; FR–2294–F–02]

RIN 2577–AB14

Section 8 Certificate and Voucher Programs Conforming Rule

AGENCY: Office of the Assistant Secretary for Public and Indian Housing, HUD.

ACTION: Final rule.

SUMMARY: This rule combines and conforms rules for tenant-based rental assistance under the rental certificate and the rental voucher programs. This rule also amends requirements for project-based assistance under the rental certificate program.

EFFECTIVE DATE: Information collections in this rule must be reviewed by the Office of Management and Budget under the Paperwork Reduction Act of 1980. Upon OMB approval of the information collections, HUD will publish a notice in the **Federal Register** announcing the effective date of the rule and adding the OMB approved control numbers. It is anticipated that this OMB approval process will be concluded, and that the rule will be made effective, by 60 days after the date of publication of this rule.

FOR FURTHER INFORMATION CONTACT: Madeline Hastings, Director, Rental Assistance Division, Room 4204. Telephone numbers (202) 708–2841 (voice); (202) 708–0850 (TDD). (These are not toll-free numbers.)

SUPPLEMENTARY INFORMATION:

Paperwork Reduction Act

The information collection requirements contained in this rule have been submitted to the Office of Management and Budget (OMB) for review under the Paperwork Reduction Act of 1980 (44 U.S.C. 3501–3520). See the Notice of Information Collections published elsewhere in today's issue of the **Federal Register**, inviting public comment on the estimated burden on the public associated with the rule. (Of course, as part of this process, it is possible that there will be changes made to the information collections.) No person may be subjected to a penalty for failure to comply with these information collection requirements until they have been approved and assigned an OMB control number, to be announced by separate notice in the **Federal Register**.

Discussion

History and Scope of Rule

On February 24, 1993 HUD published a comprehensive proposed rule to combine and conform the rules for tenant-based Section 8 rental assistance under the certificate and voucher programs. (58 FR 11292) The proposed rule would also have amended requirements for project-based assistance under the Section 8 certificate program.

HUD received approximately 400 comments on the proposed rule that generally approve the broad purpose of the rule. Comments object to particular features of the rule. Many of the objections pertain to provisions implementing statutory requirements, particularly the requirement that an owner notify HUD when terminating tenancy for a business or economic reason, and the prohibition of discrimination by multifamily owners against certificate or voucher holders.

On July 18, 1994 HUD published the first portion of the comprehensive rule for the tenant-based program: The final rule on unified admission procedures. (59 FR 36662) At that time, part 982, subparts A and E were added. Today's final rule covers other aspects of the comprehensive rule for the tenant-based programs, adding 8 subparts and reserving 3 other subparts. The rule also contains the regulations for the project-based certificate program, included in part 983.

Today's final rule does not include requirements concerning:

—Calculation of the rent and housing assistance payment for the tenant or project-based programs.

—''Special housing types'': program variants to meet special housing needs, such as congregate housing, shared housing, single room occupancy housing and independent group residences.

HUD will issue a final rule on these subjects. Until the final rule is issued, these subjects will be governed by requirements in the existing program rules. The final rule may also include further revisions of program admission procedures, or subjects in today's final rule.

I. Requirements and Plans for HA Administration of Program

A. Demonstrating HA Authority and Jurisdiction

The rule provides that an HA must furnish HUD a legal opinion on the HA's jurisdiction and authority to administer the tenant-based programs. (§ 982.51) A comment suggests that agencies already participating in the program should be exempt from this requirement.

The new rule does not add a new requirement. Since the beginning of the tenant-based programs, agencies have had to provide evidence of the HA authority and of the area where the HA was authorized to operate the programs under State and local law. A correct determination of the HA jurisdiction has important consequences for day to day administration of the program by the HA. Families may move anywhere in the HA jurisdiction, and outside the HA jurisdiction, under portability procedures. The new rule does not automatically require any new submission by the HA if the HA legal opinion is already on file with HUD, and gives HUD the necessary evidence of the HA jurisdiction and operating area. Of course, the HA must furnish new information if there is a change in State law or legal authority, such as a court decision determining the HA jurisdiction.

Under the old program regulations and handbook, the HA was required to show the governmental jurisdiction in which the HA was ''not legally barred'' by State law from entering and administering assistance contracts for program participants. This formulation emphasized the freedom of the participant to lease a unit anywhere the HA was not legally prohibited from administering assistance. Since the beginning of portability, a participant family could move outside the jurisdiction of the original HA (for non-resident applicants, portability applies after the first year in the program). In the final rule, the term ''jurisdiction'' is defined as the area where the HA is authorized to administer the program under State or local law. (§ 982.4)

B. HA Local Policies

The HA must adopt a plan that states HA local policies for running the tenant-based program. Under the proposed rule, the HA adopted local policies governing all major aspects of HA program administration. In accordance with past practice, the HA would have been required to adopt both an ''administrative plan'' for general program administration, and a separate ''equal opportunity plan'' for compliance with fair housing requirements. The proposed rule provided that the HA administrative plan and equal opportunity plan be approved in advance by HUD.

Comments largely commend HUD for allowing HAs broad discretion to adopt local policies for operation of the tenant-based program. HUD should

direct what subjects must be covered by HA administrative policies, while leaving HAs discretion on how to regulate the prescribed subjects. Comments particularly welcome new regulatory provisions confirming that an HA may adopt local policies concerning family absence from the assisted unit, program participation after break up of the assisted family, maximum security deposit, and enforcement of participant obligations. (Provisions on these subjects are discussed later in the preamble.)

However, HA comments express concern with the cost and administrative burden of adopting and revising HA policies. Comments ask clarification of a proposed provision stating that the HA must revise the administrative plan or equal opportunity plan to change the policies covered by the plan. Comments recommend combining the equal opportunity and administrative plans.

Comments discuss the difficulty and delay in securing HUD approval for new HA policies. Some comments recommend a regulatory time limit for HUD review of the HA policy.

Comments suggest that the HA should be required to give notice of proposed changes in HA policies to participants and interested organizations or advocates, and that the HA should be required to give copies of the HA policies to each applicant or participant.

On reconsideration, HUD has made a number of changes in the provisions on HA local policies:

—Merging the equal opportunity and administrative plans into a single plan;
—Limiting the subjects that must be contained in the plan; and
—Eliminating the blanket requirement for HUD advance approval of HA policies in the administrative plan.

In the final rule, HUD has decided to eliminate the requirement for separate administrative and equal opportunity plans. An HA's discretionary policies will be contained in the administrative plan. This change eliminates the artificial distinction between equal opportunity issues and ordinary administrative policies. The final rule removes the requirement for separate overlapping or duplicative coverage under the prior equal opportunity and administrative plans, such as policies for selection of program participants. All aspects of program administration must be consistent with the HA's obligation to operate the program in accordance with civil rights requirements.

Under the terms of the proposed rule, the administrative plan would have been a comprehensive statement of HA local policies for administration of the program. Under the final rule, the mandatory coverage of the administrative plan is only focussed on equal opportunity requirements and programmatic policies for the specific areas listed in the rule. (§ 982.54(d)) While HA policy and practice in other areas (such as financial management) have a vital role in operation of the tenant-based program, HUD review and oversight will focus on the results of HA policies, not on whether the HA has adopted a written policy to achieve these results (or has obtained HUD approval for such a policy).

Besides listing specific subjects that had to be included in the administrative plan, the proposed rule also would have required the HA to include unspecified ''other local HA policies'' for administration of the program. In the final rule, this residual category is deleted. The HA is only required to cover the specific subjects listed in the rule. In defining this mandatory coverage, HUD does not express any view that other matters are not important, or that the HA should not adopt formal written policies for the guidance of program officials. However, the decision whether to adopt such additional policies is left to the local judgment and managerial experience of the individual HA.

Before this rule, the HA was required to submit the administrative plan for HUD approval. In the final rule, this requirement is deleted. For most purposes, the HA may adopt and revise HA policies without asking for HUD approval. However, the policies in the administrative plan must comply with HUD requirements. The HA must give HUD a copy of the administrative plan. (§ 982.54(b))

By eliminating the HUD approval requirement, the new rule substantially increases the HA's day-to-day autonomy in administration of the program, and minimizes HUD interference in HA policy decisions. At the same time, HUD retains the authority for necessary oversight and audit of HA operations. If HA policies violate HUD requirements, the HA must revise the administrative plan to comply with HUD requirements. (§ 982.54(b)) Instead of using HUD administrative resources for routine review and approval of policies in the HA administrative plans, HUD can concentrate available HUD staff on discovery and correction of the most serious HA problems in managing the program.

Since the rule generally lifts the requirement for prior HUD approval of HA administrative policies, an HA can revise its policy more quickly and easily. The HA does not need to wait for HUD approval, or negotiate changes in HA policy to satisfy the HUD reviewer, so there is no need to consider or establish a deadline for HUD review of the HA administrative plan, as suggested by some comments.

Comments ask if changes in the administrative plan must be approved by the HA board. The final rule provides that the administrative plan and any revisions of the plan must be formally adopted by the HA board or other authorized officials. (§ 982.54(a))

In certain key areas, HUD rules will continue to mandate advance HUD approval of HA policies. Residency preferences for selection of applicants must be approved by HUD. (§ 982.208(b) (59 FR 36687, July 18, 1994)) As required by law, the HA family self-sufficiency (FSS) action plan must also be approved by HUD. (42 U.S.C. 1437u(g)(1)) (If FSS policies are contained in an HA's administrative plan, the policies must be moved to the HA's FSS action plan.)

Comments state that the HA administrative plan should include HUD requirements, not just HA discretionary policies. HA comments ask if an HA must amend the administrative plan whenever HUD revises regulations or other requirements. The final rule provides that an administrative plan must state HA policy ''on matters for which the HA has discretion to establish local policies.'' (§ 982.54(a))

Since the final rule does not require that the HA revise the administrative plan to merely echo HUD regulations or other requirements, the HA is only required to revise the administrative plan to reflect the exercise of policy choices by the individual HA. By definition, HUD ''requirements'' are binding on the HA in any case.

For practical administration of the program, HAs may elect to develop procedures or guidance for HA staff that reflect both HUD requirements and the HA's policy decisions in accordance with HUD requirements. As noted above, the rule no longer requires that the administrative plan must be approved in advance by HUD, so it is less critical to distinguish between HA policy mandated by HUD, as opposed to HA policy adopted in accordance with local HA discretion.

The final rule drops a proposed provision that would have required an HA to adopt policies to encourage participation by eligible families. Since many eligible families are eager to participate in the program, and most HAs have long waiting lists, HAs have

little need to stimulate family interest and demand for participation.

C. Equal Opportunity Requirements

The rule lists federal civil rights law and regulations that apply to the tenant-based programs. (§ 982.53)

Requirements under Section 3 of the Housing and Community Development Act of 1983 apply to construction or rehabilitation under the Section 8 program, but do not apply to Section 8 tenant-based assistance. Under the final rule, reference to Section 3 requirements is moved to 24 CFR part 983, which contains the requirements for projects constructed or rehabilitated under the Section 8 project-based certificate program. (§ 982.11(c)(3)) HAs are encouraged to recruit qualified program staff in a manner that furthers Section 3 goals.

Comments recommend that the rule should require HA compliance with State and local fair housing laws. HUD believes that the federal program rule and program enforcement should only require compliance with federal fair housing requirements. State and local governments can of course impose additional requirements. The federal regulation is not intended to pre-empt the operation of such State or local laws.

Some comments recommend that the rule should impose extensive additional fair housing procedures, including HA help for persons who need assistance in presenting a claim for illegal discrimination; HA collection of fair housing data and HA analysis of barriers to housing choice; and fair housing training of HA staff. As noted above, HA operation of the program is subject to civil rights statutes and regulations. In addition, the basic structure of the tenant-based program is a powerful instrument for promoting housing choice by low income and minority families.

An HA must certify that it will comply with equal opportunity regulations and requirements. (§ 982.53(c)) A comment notes that the certification is unnecessary, since the HA must follow the law in any case. HUD agrees that the HA is bound by the law and regulations, but retains the requirement for equal opportunity certification, in accordance with historical practice in HUD programs. The certification is not burdensome, and reminds the HA of its responsibility to administer its tenant-based program in accordance with the federal fair housing requirements.

II. Funding and HA Application for Funding

A. Competition for Funds; Criteria for Selection

Some program funding is distributed by HUD to HAs through a competitive process. So HAs can compete for such funding, the Department publishes a public notice in the **Federal Register**, called a ''Notice of Funding Availability'' or ''NOFA''. The HUD Reform Act of 1989 provides that the **Federal Register** notice must state the ''criteria'' for selection of applicants. The competitive criteria in a **Federal Register** NOFA may include any objective measure of housing need, project merit and efficiency. (HUD Reform Act of 1989, Section 102(a)(3), Pub. L. 101–235, 103 Stat. 1990; 42 U.S.C. 3545(a)(3))

Under the law, HUD must publish a description of how to apply for assistance under the NOFA, including any deadlines. (Id. section 102(a)(2)) The Reform Act requirements are implemented in a HUD regulation at 24 CFR part 12. The Section 8 program regulation describes the procedure for HUD publication of a NOFA to govern competitive award of funds in accordance with part 12 (§ 982.101(c)), for HA submission of applications in accordance with the NOFA (§ 982.102(b)), and for evaluation of HA applications based on selection criteria in the NOFA (§ 982.103(a)(2)).

In recent years, HUD has published a number of NOFAs each federal fiscal year to distribute Section 8 tenant-based funding for various purposes identified in the appropriation act and conference report. For example, in federal fiscal year 1994, HUD published separate NOFAs stating criteria for award of program funding distributed under a statutory fair share formula, for funds set aside for homeless persons with disabilities, for homeless veterans with severe psychiatric or substance abuse disorders, for family self-sufficiency (FSS) program coordinators, for elderly service coordinators and for the family unification program.

Some public comments object to award of funding under selection criteria in a **Federal Register** NOFA. The comments recommend that criteria for award of funds should be determined in a full dress rulemaking, with notice and opportunity for public comment. Comments indicate that the competitive criteria should be included in the standing program regulation.

Comments also object to criteria used by HUD to select HA applications for funding. Comments state that the selection criteria should give greater weight to efforts to further fair housing, and should penalize an applicant HA that has a residency preference or other policies that have an ''exclusionary'' effect. Comments state that the criteria for selection should give funding preference to HAs that do not use a residency preference for selection of applicants, and that have an open waiting list.

The competitive selection scheme under a HUD NOFA may emphasize the administrative capability of applicant HAs. Comments claim that application of this HUD selection criterion to distribution of fair share funding in some metropolitan areas tends to favor a suburban HA (with greater presumed administrative competence) over the HA for a core city. Comments also claim that emphasis on the capability criterion is too subjective. Other comments recommend that funding should be distributed by formula, rather than by a competitive process.

HUD believes that award of competitive funds according to criteria stated in a **Federal Register** notice carries out precisely the process intended by the 1989 HUD Reform Act, and the regulation adopted by HUD to implement the Reform Act requirements (24 CFR part 12). HUD is not required to establish competitive criteria by notice and comment rulemaking.

Funding for individual HUD programs, such as the Section 8 tenant-based assistance programs, is typically appropriated by the Congress in each separate fiscal year. Each year Congress determines the amount of funding available for different purposes. The breakdown of Section 8 program funding is not definitively known until enactment of the appropriation act. (The detailed breakdown is generally expressed in a Table that is included in the Conference Report.) In this context, the use of a notice and comment rulemaking process to determine criteria for competitive award of funds in each fiscal year would paralyze the administrative process, prevent the timely award of appropriated funds, and deny flexibility in determining appropriate criteria for award of funding under the annual appropriation.

Comments recommend that HUD adopt new procedures for denial of HA funding applications. The comments suggest that HUD should give the rejected applicant a written statement or checklist of the reasons for denial of the HA's application. Comments also suggest that a rejected applicant should be granted the right to appeal HUD's funding decision.

For funding awarded by a competitive process, HUD has issued regulations

under the HUD Reform Act of 1989. These regulations give broad public access to documentation of the basis for HUD decision on HA funding applications. The Reform Act rule provides that HUD must ensure that documentation on each application is ''sufficient to indicate the basis on which HUD provided or denied the assistance.'' (24 CFR 12.14(b)(1)) Under the Reform Act rule, this documentation is available for public inspection for five years. (12.14(b)(2)) The rule for tenant-based assistance is revised to add a cross-reference to the documentation and public inspection requirements under the Reform Act rule. (§ 982.103(b)(3))

HUD has not accepted the recommendation to afford the HA applicant a right to appeal HUD's decision on HA funding applications, or to delay distribution of funds pending hearing on an HA appeal. HUD is deeply concerned that the grant of such a right would severely delay or paralyze the process for award of funds, would encourage fruitless and distracting appeals and litigation, and would result in major waste and diversion of administrative energies by HUD and the HAs. HUD seeks to award competitive funding by a fair and expeditious competition, carried out in accordance with criteria stated in a published NOFA. However, HUD will not encumber this process by adding the right to a formal appeal or hearing for the HA. Sometimes NOFAs provide a procedure for correction of allocation inequities.

B. Amount of Funding: Units or Dollars

Several comments ask HUD to provide funding to an HA for a specific number of units, rather than for a fixed allocation (amount) of funds. Under the certificate program, the HA was formerly required to maintain a HUD-approved unit distribution (by bedroom size), using the funding provided under the consolidated ACC, including any amendment funding. (Under the ACC, there is a separate ACC term for each funding increment.) In the voucher program, the unit distribution is not established by HUD. The HA is responsible for management of available voucher funding under the consolidated ACC. HUD did not provide voucher funding for ACC amendments to support a pre-determined unit mix. The HA controlled the use of available voucher funding by setting the level of subsidy for each family (payment standard), and by controlling admissions to the program.

Under recent amendments of regulatory selection requirements for both the certificate and the voucher programs, admission from the waiting list may no longer be based on family size. (§ 982.204(d), as amended 7/18/94, 59 FR 36662 et seq.; see preamble discussion at 36666–36667) This change automatically eliminated possible inequities caused by disparities of wait-times for families of different sizes. The length of wait does not depend on the size of the family. In addition, the regulation change eliminated the problems and complexities of administering separate sub-lists for different unit sizes, as well as the requirement for the HA to maintain (in the certificate program) a HUD-determined unit distribution.

Comments ask if the HA will be required to maintain a HUD-approved unit distribution by bedroom size. Since the HA is prohibited from selection by unit size for tenant-based assistance, the HA is not required to maintain a HUD-approved unit distribution.

HUD believes that the new regulatory and administrative system is a better way of managing program funds. In the annual appropriation process, the Congress appropriates specific dollar amounts of funding (budget authority), rather than funding to support a specific number of units under each HA's consolidated ACC. HUD cannot guarantee that the funding that is appropriated by the Congress, and obligated by HUD to a specific HA, will support the changing number of units that will result from the HA's admission of families without regard to unit size, under the system provided in HUD's new regulation. Rather, the HA is in the best position to manage the available funding committed to the HA, so that the HA can continue to provide assistance for families already admitted to the program.

C. Family Unification

The proposed rule recites statutory requirements governing award of funding appropriated for ''family unification'' (also called ''foster child care'')—which is special Section 8 certificate program funding to avoid the need to place or keep children in out-of-home care. Comments recommend against providing categorical funding for family unification, object to limits on competition for family unification funds, and question why family unification does not apply to vouchers. Some comments support special funding for this purpose.

The final rule deletes the rule provisions stating statutory requirements governing family unification set-asides. When the Congress provides funding for family unification, statutory and other requirements can be stated in the NOFA offering any family unification funding for public competition and award.

III. Annual Contributions Contract and HA Administration of Program

A. Annual Contributions Contract

Comments recommend that funding for all increments in an HA's certificate or voucher program should be combined in a consolidated annual contributions contract (ACC). Under this rule and under current HUD practice, all funding for an HA's Section 8 tenant-based programs is provided under a single consolidated ACC, with separate ACC attachments that show all funding for the HA's certificate and voucher programs.

The final rule provides that commitments for all the funding increments in an HA's certificate and voucher programs are listed in one consolidated contractual document called the consolidated annual contributions contract (consolidated ACC). (§ 982.151(a)(2)) The final rule eliminates a proposed provision that would have required separate consolidated ACCs for an HA's certificate and voucher programs. In most respects, the certificate and voucher tenant-based programs are identical. In 1994, HUD combined the ACC forms for these programs into a single consolidated ACC. The single consolidated ACC provides a common contractual basis for unified administration of the tenant-based programs.

B. Administrative Fees

Administrative fees are paid by HUD to cover HA costs to run the Section 8 tenant-based assistance program. (§ 982.152) Fees must be approved by HUD. The rule describes the purposes for which fees are paid. The rule does not state how fees are calculated. The calculation of fees in each federal fiscal year is affected by the HUD budget and annual appropriations, and may be affected by other temporary legislation.

Section 8(q) of the U.S. Housing Act of 1937 (42 U.S.C. 1437f(q)) states requirements for determining administrative fees in the certificate and voucher tenant-based programs. However, the Section 8(q) requirements only apply if the HUD appropriation act so provides. Under the terms of HUD appropriations since federal fiscal year 1989, Section 8(q) requirements apply to calculation of administrative fees for so called ''incremental'' units. Generally, ''incremental units'' are new federally-assisted units, as contrasted with

renewal or replacement of expiring assistance. Other units are not subject to Section 8(q) (generally, units funded before fiscal year 1989 and funding for renewal or replacement). HUD has full discretion to set HA fees for such units.

HA comments recommend increases in HA administrative fees. Comments disagree with HUD's statement, in the preamble of the proposed rule, that administrative fees generally exceed the amount needed to administer the program. Comments point out that HAs are now required to carry out many new tasks, such as administration of family self sufficiency, portability and assistance for special populations, such as homeless persons or persons with AIDS. Comments urge that the administrative fee be based on measurement of the time needed to accomplish tasks required by HUD rules.

The rule is intended to provide a regulatory framework for periodic determination of administrative fee. The detailed procedures for fee calculation are not described in the permanent program rule. From time to time, HUD issues notices and handbooks explaining how to compute the applicable fees in accordance with the appropriations and other governing laws.

Comments recommend allowing a one-time fee for implementation of the new rule. This comment is not adopted. This rule does not radically change existing program procedures. In certain respects, the rule will significantly simplify HA administration of the program. Any change in program requirements entails some administrative burden in changing existing management practice. However, HUD does not anticipate that the transition to operation under the new rule will cause problems justifying a higher administrative fee.

C. Ongoing Administrative Fee

1. How Calculated

HUD pays a fee to the HA for every month after a unit is ''under Housing Assistance Payments (HAP) Contract''. This is called the ''ongoing administrative fee''. In accordance with current program practice, the proposed rule provided that the ongoing fee for a unit equals a HUD specified percentage of the Section 8 existing housing fair market rent for a two-bedroom unit (regardless of the actual unit size). In present program usage, different fee percentages apply to different types of units in the HA's tenant-based program. A ''blended fee'' percentage is calculated for the HA's whole certificate or voucher program, reflecting the proportions of these different unit types in the HA's program.

The proposed rule did not state the percentage of the FMR that is used to calculate the administrative fee, but provided that the percentage will be ''HUD-specified''. For units where the ongoing fee is calculated under Section 8(q) of the U.S.H. Act (42 U.S.C. 1437f(q)) (to date, only ''incremental'' units), the statute provides that the amount of the administrative fee is 8.2 percent of the fair market rent for a two bedroom unit.

HUD is currently considering how the administrative fee system should be revised to fairly and adequately compensate HAs to administer the program. In the future, administrative fees may or may not be calculated as a percentage of the fair market rent. Since the future fee system is not known, the final rule does not provide that the ongoing administrative fee is calculated as a percentage of the fair market rent.

The final rule states only that the ongoing fee is established by HUD. As in the past, the ongoing fee is paid for each program unit under HAP contract on the first day of the month. (§ 982.152(b)(1)) This change leaves flexibility for future adoption of a new administrative fee system. However, under current law, the ongoing fee for units under Section 8(q) remains 8.2 percent of the two-bedroom fair market rent. On January 24, 1995, HUD published a notice revising the method for calculating administrative fees for units that are not subject to Section 8(q). (60 FR 4764)

By law, an HA that administers Section 8 assistance may contract to make assistance payments to itself as a Section 8 owner. (42 U.S.C. 1437f(a)) The final rule adds a new provision confirming that HUD may pay a lower ongoing administrative fee for HA-owned units. (§ 982.152(b)(3))

2. Higher Ongoing Fee—For Small Program or Program Operating in Large Area

For units subject to Section 8(q), the law provides that HUD may decide to increase the ongoing administrative fee ''if necessary to reflect the higher costs of administering *small programs and programs operating over large geographic areas*''. (U.S.H. Act, Section 8(q)(1), 42 U.S.C. 1437f(q)(1)) The proposed rule would have provided that HUD could approve a higher ongoing fee for an HA program operating over a ''large area''. Such fees may only be approved ''if appropriations are available'' for this purpose.

Comments state that HUD should not pay a higher fee for an HA that operates in a large region. Comments want HUD to clarify the meaning of ''large area''. Comments ask HUD to allow a higher fee for an HA that must service portability families outside the HA's normal State-law jurisdiction. Comments state that the rule should allow higher ongoing fees in other cases (not just for an HA operating in a large area), including higher fees to compensate for ''extenuating problems''. Comments recommend that the ability to pay higher fees should not be tied to availability of appropriations.

Unlike Section 8(q), the proposed rule would not have permitted a higher ongoing fee for ''small programs''. Comments state that the proposed rule discriminates against HAs with small programs. They state that the rule should allow a higher fee for small programs, such as small rural programs, as well as programs operating in larger areas.

HUD can only pay administrative fees from funds (budget authority) appropriated by the Congress. HUD has amended the final rule to provide that HUD may decide to approve a higher ongoing fee in the two cases allowed by the Congress under Section 8(q)—for small programs and for programs operating in large areas. (§ 982.152(b)(2))

The two cases stated in the rule include the major circumstances where a higher ongoing fee may be justified. An HA operating in a large area may incur higher expenses to service the assisted units, for example, because of longer trips to inspect program units scattered in rural communities, than an HA whose units are clustered closer to HA offices. HAs with small programs may not benefit from economies of scale in administration of the program.

The rule does not give HAs that operate in large areas or with small programs any right to a higher ongoing fee. HUD has full discretion whether to approve any increase over the normal ongoing fee.

At this time, HUD will not attempt, as suggested by comment, to further define in this rule when a higher fee may be approved for a ''large'' geographic area or a ''small'' HA program. The field office will apply these concepts on a case by case basis, in accordance with HUD Headquarters instructions, to determine if an HA needs a higher fee for proper administration of its individual program.

D. Preliminary Fee

HUD pays a preliminary fee for each new unit added to the HA program. (By law, the maximum preliminary fee for

Section 8(q) units is $275 (42 U.S.C. 1437f(q)(2)(A)(i)), or $300 for preliminary costs in the family self sufficiency (FSS) program (42 U.S.C. 1437u(h)(1)).) The preliminary fee is primarily used to cover HA costs to lease up new units under the ACC (but not for turnover or renewal of program units).

An HA is required to document amounts spent for preliminary costs, up to the allowable per unit maximum. The HA is only compensated for qualifying expenses actually ''incurred''. Public comments recommend eliminating the requirement for an HA to present cost justification in order to collect a preliminary fee. The comment is not adopted. The rule is revised to specify, as required by law (for units subject to Section 8(q)), that preliminary fees cover the cost of preliminary expenses that the HA ''documents it has incurred'' in connection with new funding from HUD. (42 U.S.C. 1437f(q)(2)(A)(i); § 982.152(c)(2))

In the past, HAs were required to submit justification to HUD for payment of the preliminary fee. Under this rule, HAs are no longer required to submit up-front justification to HUD to receive the fees. However, HAs must maintain accounting records that document preliminary costs incurred by the HA, and must make the documentation available when requested for audit by HUD.

Some comments recommend that HUD should eliminate a separate preliminary fee, or that a preliminary fee should only be paid for a new program. HAs should be compensated through the ongoing administrative fees. Other comments recommend that HUD should pay a preliminary fee for every new leasing by an assisted family, not just for the initial lease-up of a new funding increment. At this time, HUD is retaining provision for a separate preliminary fee as authorized by current law for fees calculated under Section 8(q) of the U.S. Housing Act of 1937 (when so provided in HUD's appropriation). As noted above, HUD is considering modification of the current system for calculating ongoing administrative fees.

E. Family Self-Sufficiency

The proposed rule would have provided that the preliminary fee may be used to cover ongoing expenses for family self-sufficiency (FSS) program activities. Some comments approve the provision for payment of ongoing family self-sufficiency expenses from the administrative fee. Other comments object that the use of preliminary fee for this purpose would reduce the amount available to the HA for preliminary costs. FSS is an ongoing program. HAs may not have additional program increments (to generate preliminary fees that may be used for payment of FSS costs). Comments recommend payment of a special fee for FSS.

The final rule adds authorization for approval of a fee for HA costs to coordinate supportive services for families participating in the FSS program. (§ 982.152(a)(1)(v)) This special FSS fee is not linked or limited to FSS coordinator costs in connection with a new funding increment.

F. Helping Families Find Housing

In accordance with current practice, the proposed rule would have provided that HUD may approve a ''hard-to-house'' fee to cover the cost of special assistance to a family with three or more minors. Unlike the preliminary fee, a hard-to-house fee was to be paid whenever a qualifying family moved to a new assisted unit, not just for new program funding. The proposed rule also would have provided that a hard-to-house fee would not be paid for a unit that is owned by the HA.

Comments recommend an increase in the amount of the hard-to-house fee, and that the HA should be paid a hard-to-house fee to cover costs to help a family with a child under seven find a lead-free unit. Comments urge that the hard-to-house fee should also be paid for leasing of an HA-owned unit, since the HA must follow the same procedures as for a private dwelling unit.

Other comments suggest elimination of the hard-to-house fee, or recommend that HUD should not pay a hard-to-house fee unless the HA has in fact made special efforts to house a large family. Unlike the preliminary fee, HUD does not currently require the HA to document actual costs or administrative effort. The hard-to-house fee is paid for every qualifying move.

Section 8(q) provides that HUD may determine reasonable fees for: ''the costs incurred in assisting families who experience difficulty (as determined by the Secretary) in obtaining appropriate housing under the programs * * *.'' (42 U.S.C. 1437f(q)(2)(A)(ii))

The final rule provides only that HUD may approve administrative fees for ''cost to help families who experience difficulty renting appropriate housing * * *.'' (§ 982.152(a)(1)(iii)) The final rule does not use the term ''hard-to-house'', and does not specify that the fee is only paid for a family with three or more minors. HUD is examining all aspects of the administrative fee system. HUD will consider when HUD should pay an additional fee so that the HA can give the family additional help in finding a rental unit.

G. Help for Elderly and Disabled

Under a 1992 law, Section 8(q) administrative fees may be used to employ or retain coordinators of supportive services for elderly or disabled families who receive tenant-based assistance. (42 U.S.C. 1437f(q)(3)(A), as amended by Section 675 of the Housing and Community Development Act of 1992, 106 Stat. 3828) The rule is revised to provide that HUD may approve administrative fees to cover HA cost to coordinate supportive services for elderly and disabled families. (§ 982.152(a)(1)(iv)) Supportive services include a wide range of assistance for the elderly and disabled, such as health services, nonmedical counseling, personal care, case management and other appropriate services. (See 42 U.S.C. 13631(c))

H. Audit Costs

The rule provides that HUD may approve an administrative fee to cover cost of audit by an independent public accountant. (§ 982.152(a)(1)(vi)) Currently, HUD pays a fee to cover costs of required audit by an independent public accountant (IPA). Public comment states HUD should list this special type of fee in the proposed rule. HUD agrees, and has revised the rule to specify that HUD may approve a separate fee for IPA audit costs.

I. Other Costs

In addition to the listing of specific fees that may be approved by HUD, the final rule provides that HUD may pay an additional administrative fee for ''other extraordinary costs'' approved by HUD. (§ 982.152(a)(1)(vii)). This category leaves HUD flexibility to approve additional amounts needed by an HA for special purposes.

The final rule does not provide for a special portability fee. Portability fees will be eliminated beginning in federal fiscal year 1996.

J. HA Responsibilities

The rule contains a list of some basic HA responsibilities in administration of the tenant-based programs. (§ 982.153) Comments suggest some additions to the list of HA responsibilities. The final rule revises and supplements the list of HA responsibilities as stated in the proposed rule. The final rule provides that:

—The HA determines who can live in the assisted unit, at admission and during the family's participation in the program. (§ 982.153(b)(8)) This new provision is consistent with other

provisions concerning the HA's authority to determine when a group of persons qualifies as a ''family'' (§ 982.201(c)(3)), to select families for admission to the program (part 982, subpart E), and to approve additional occupants of the assisted unit. (§ 982.551(h)(2))

—The HA must encourage owners to make units available for leasing in the program, including owners of suitable units located outside areas of poverty and racial concentration. (§ 982.153(b)(4))

—The HA is responsible for conducting an ''informal review'' of certain HA decisions concerning an applicant for participation in the program. (§ 982.153(b)(19) and § 982.554) The final rule restores the distinction in the existing rule between an ''informal review'' of HA decisions concerning an applicant for participation, and an ''informal hearing'' on HA decisions concerning a family that is already admitted to the program. (See § 982.554 and § 982.555)

—The HA must obtain and verify evidence of citizenship and eligible immigration status, as required by HUD regulations implementing statutory restrictions on assisted occupancy by certain noncitizens. (§ 982.153(b)(9); see 24 CFR part 812)

—The HA must establish and adjust a utility allowance for tenant-supplied utilities. (§ 982.153(b)(16))

—The HA must administer an FSS program. (§ 982.153(b)(22))

The final rule also specifies that the HA bears responsibility to affirmatively further fair housing goals, as well as to comply with equal opportunity requirements. (§ 982.153(b)(5))

K. Administrative Fee Reserve

The rule codifies ACC and handbook provisions concerning the ''administrative fee reserve'' (§ 982.155) This account was formerly called the ''operating reserve''. The administrative fee reserve is credited with excess administrative fees earned by an HA in prior years. Generally, if funds in the reserve are not needed for program administration (to the end of the last ACC funding increment), the HA has broad discretion to use administrative fee reserve funds for ''other housing purposes''. The purposes must be consistent with State and local law. (§ 982.155(b)(1)) The allowable purposes may include housing purposes not connected with the Section 8 programs.

In any HA fiscal year, the HA must use fee reserve funds for program administrative expenses in excess of HUD administrative fees for the year. Such use has precedence over HA use of the fee reserve for other non-program housing purposes. HUD may prohibit use of the fee reserve for certain purposes. (§ 982.155(b)(1)) In addition, if the HA fails to administer the program adequately, the HUD field office may freeze HA use of fee reserve funds, or may direct the HA to use fee reserve funds to improve program administration or to restore funds disbursed for ineligible expenses. (§ 982.155(b)(3))

Comments recommend that HUD should relinquish any control over HA funds in the administrative fee reserve. Administrative fees should be treated like payments to other contractors for services rendered. Comments also ask HUD to clarify when the HA may use fee reserve funds for ''other housing purposes.''

These recommendations are not adopted. Funds in an HA's administrative fee reserve were paid to the HA by HUD to administer the HA's Section 8 program. It is important to assure that fee reserve funds are used first to cover HA administrative costs of the HA's Section 8 program, and only then are used for other housing-related purposes. The regulatory standard for use of fee reserve funds leaves the HA great flexibility to apply the funds for local housing purposes.

In accordance with historical program practice, the rule provides that the HUD field office may freeze or direct use of reserve funds if the HA has not ''adequately administered'' any Section 8 program. (§ 982.155(b)(3)) Comment asks HUD to clarify the methodology for determining when the HA is not adequately administering the program.

HUD believes that the regulatory formula provides sufficient guidance on the basis for freezing HA use of funds in the administrative fee reserve. This provision is designed to protect program funds, and provide a remedy for serious or systemic violations of program requirements by an HA. Such violations can occur in many ways. HUD requires a broad authority to restrict HA use of administrative fee reserve funds if the HA is not running the program in accordance with HUD requirements.

The final rule adds three limitations on the HA's authority to use the administrative fee reserve for ''other housing purposes'':

—The HA board of commissioners or other authorized HA officials must establish the maximum amount that may be charged against the administrative fee reserve without specific approval. (§ 982.155(b)(2))

—The HA may only use the reserve for other housing purposes if the funds are not needed to cover HA administrative expenses through the end of HUD's funding commitment under the consolidated ACC—that is, to the end of the term of the last expiring funding increment. (§ 982.155(b)(1))

—HUD may prohibit use of administrative fee reserve funds for specified purposes. (§ 982.155(b)(1))

L. Depositary

Program funds must be deposited to and disbursed from the HA's account with a financial institution acting as program depositary. (§ 982.156) The HUD field office can freeze depositary funds by giving notice to the depositary institution that prohibits the depositary from permitting HA withdrawals. In the final rule, the HUD notice is called a ''freeze notice''.

Comments say that HUD also should notify the HA when the depositary is frozen. HUD agrees. The rule is revised to provide that HUD must give the HA a copy of the freeze notice from HUD to the depositary.

M. Budget and Expenditure

Under the rule, the HA must comply with HUD program regulations and other requirements. (§ 982.52(a)) HUD requirements include the financial management procedures required by HUD. The rule does not state the details of HUD-required budget and accounting procedures.

The final rule is revised to state that the HA may only use program funds in accordance with a HUD-approved budget. (§ 982.157(b)(1)) The budget must be submitted to HUD at such time and in such form as HUD requires. (§ 982.157(a)) Previously, these requirements were stated in the consolidated ACC, but were not explicitly recited in the program rule.

Comments recommend that the Department should consolidate the budget and requisition process for the certificate and voucher programs. The Department agrees, and has established uniform budget procedures for the tenant-based programs. Of course, the budget process must continue to reflect statutory differences in the program subsidy computation for the certificate and voucher programs.

Comments ask HUD to eliminate separate budgeting and financial reporting for renewal funding (funding to provide continued assistance after the end of an ACC funding commitment). HUD procedures already have been changed to combine budgets and financial accounting for new units and renewals.

N. Program Records

The rule codifies and clarifies basic requirements governing the HA's obligation to maintain and retain program records. (§ 982.158) Comments approve HUD's clarification of requirements for retention of program records.

Comments recommend that HUD should reduce the burden of accounting and record-keeping requirements. Comments suggest that the rule should describe what record media are allowed or disallowed, and should specify that record-keeping requirements apply to any form of permanent, retrievable record (including electronic records), not just paper files.

The rule provides that HUD and the Comptroller General must be allowed full and free access to program accounts and records. (§ 982.158(c). See 42 U.S.C. 1435) Comments suggests that the rule should state specifically that such access must be reasonable, so that examination of HA records doesn't jeopardize HA operation.

The final rule does not describe what record-keeping media are allowed or prohibited by HUD. Such details will be provided in program handbooks or notices. However, the rule is revised to specify that program records must be in the form prescribed by HUD. (§ 982.158(a))

Since HAs now make extensive use of computers in management of the program, and since HAs often maintain major program record systems in computerized form, the rule specifies that the HA must comply with HUD requirements governing ''computerized or electronic forms of record-keeping''. (§ 982.158(a)) In the rule, HUD also recognizes and addresses the special problems in examination and audit of computerized records. Effective examination of such records may require knowledge of the system (hardware and software), and of passwords, commands and instructions needed to access data held in the system. The final rule specifically provides that the HA must grant the examiner (HUD or the GAO) full and free access:

''to computerized or other electronic records, and to any computers, equipment or facilities containing such records, and shall provide any information or assistance needed to access the records.'' (§ 982.158(c))

The rule is also revised by restating terminology and language for consistency and simplicity. In particular, the rule now refers to ''records'', to cover all the various accounts, forms and documentation used to maintain program information, and including all of the media in which such data may be maintained.

HUD has not adopted the recommendation to specify that access must be reasonable. Of course, all requirements should be administered in a reasonable fashion.

An HA administering Section 8 is not subject to federal Freedom of Information Act (FOIA) and Privacy Act requirements. Comments recommend that an HA should be required to make program records available for public inspection as under the FOIA. This recommendation is not adopted. The decision whether to release or deny release of program information generally rests in the discretion of the HA, subject to any restrictions under State or local law (but see § 813.109(b) concerning disclosure of information obtained pursuant to the family's verification release or consent).

O. Conflict of Interest

Under the rule, certain officials or employees of an HA, contractors, subcontractors or agents of an HA, and members of Congress, are prohibited from holding a direct or indirect interest in any program contract or arrangement. (§ 982.161(a)) Members of these classes must disclose their interest or prospective interest to the HA and to HUD. (§ 982.161(b)) As in the past, a HUD field office may waive the conflicts requirements ''for good cause'' in an individual case. (§ 982.161(c))

A comment recommends that a request for waiver should be deemed automatically allowed unless rejected in 30 days. This recommendation is not adopted.

P. Contract Forms

The HA must use the contract and other program forms prescribed by HUD. (§ 982.162) Comment asks that HUD list the forms. The regulation lists certain basic program contracts that must be used. However, the rule does not give a complete list of the contracts and other program forms. A HUD handbook or other HUD directive will list the HUD-prescribed forms. There is no reason to clutter the regulation with this information.

Q. Fraud Recovery

Comments state that an HA has no incentive to recover program funds lost because of bad debts or fraud. In response, HUD notes that existing regulations permit an HA to retain fifty percent of Section 8 fraud losses that the HA is able to recover from a family or owner by litigation, court order or repayment agreement. (24 CFR part 792; Section 326(d) of the Housing and Community Development Act of 1981 (42 U.S.C. 1437f note), as amended by 106 Stat. 3711, 10/28/92) The law and regulation are intended to encourage HAs to investigate and pursue fraud and abuse in the Section 8 program. The rule contains a cross-reference to the separate regulation on Section 8 fraud recoveries. (§ 982.163)

IV. Leasing a Unit

A. Information When Family Is Selected

1. Briefing and Information Packet

When a family is selected to participate, the family needs to know how the program works. The HA gives the family an oral briefing, and an information packet. In the HA briefing, the family receives a broad description of how the program works, family and owner responsibilities, and areas where the family can lease a unit. The information packet reinforces the briefing, and supplies more detailed information to the family. The final rule modifies requirements on the briefing and information packet. (§ 982.301)

In the final rule, several elements are removed from the listing of items that must be covered in the oral briefing, but are included in the written information packet—a description of the housing quality standards (HQS), and of factors the family should consider in renting a unit.

The final rule drops a proposed provision that would have required the HA to give prospective landlords information about the family's rental history or about drug-trafficking by family members. Under the final rule, the HA has the choice whether to furnish this type of information to landlords. (§ 982.307(b)(2)) The HA is only required to tell a prospective Section 8 landlord (from information in HA records) the family's current address, and the family's current and prior landlord. The HA policy on furnishing other information about the family to landlords must be stated in the HA administrative plan. (§ 982.54(d)(7)) The HA policy must be stated in the information packet for the family. (§ 982.301(b)(8))

The oral briefing and information packet must explain where the family may lease a unit, inside and outside the HA jurisdiction. (§ 982.301(a)(1)(iii) and § 982.301(b)(5)) If the family qualifies to move outside the HA jurisdiction under portability, the briefing and information packet must explain how portability works. (§ 982.301(a)(2) and § 982.301(b)(5))

The final rule adds a new provision that if the jurisdiction includes any high poverty census tract, and if the family

is living in such a census tract, the HA briefing must explain the advantages of moving to an area that does not have a concentration of poor families, such as improved employment, educational opportunities and decreased dropout rates. In the briefing, the HA may not discourage the family from choosing to live anywhere in the HA jurisdiction, or outside the HA jurisdiction under portability procedures. (§ 982.301(a)(3))

The final rule provides that the briefing packet must include a copy of the HUD prescribed ''lease addendum'' (required lease language), and the form of request for lease approval. (§ 982.301(b) (6) and (7))

The proposed rule would have required that the HA supply the family certain types of information on prevention of lead-based paint poisoning. The final rule provides that the HA must give the family the HUD-prescribed lead-based paint brochure. (§ 982.301(b)(11))

2. Information About Landlords

The proposed rule would have provided that if requested by the family, the HA would give the family available information about prospective landlords. Comments state that the HA should provide information about ''units'', rather than about prospective ''landlords''. Other comments state that the HA should not be allowed to release landlord information without the landlord's consent, or that HAs may be accused of steering families to landlords in particular areas. HUD has not followed these suggestions.

The final rule requires that the briefing packet include a list of landlords or other parties known to the HA who may be willing to lease a unit to the family, or help the family find a unit. (§ 982.301(b)(13)) The list may include owners or rental agents for specific properties or units known to the HA (for example, an apartment house with units rented to other program participants), or entities that may provide access to numerous units and locations in the local market, such as real estate agents, rental agents or social service agencies with listings of possible rental openings. The HA may or may not provide a listing of specific ''units''. The name of a single listing agent may provide access to many specific units in the local housing market.

In providing listings to assist a family, the HA is subject to general program requirements designed to protect the family's practical and legal freedom to search for an available unit. The HA may not discourage the family from choosing to live anywhere in the HA jurisdiction, or outside the HA jurisdiction under portability procedures. (§ 982.301(a)(2)). The HA may not directly or indirectly reduce the family's opportunity to select among available units. (§ 982.353(f)) These general requirements apply both to the provision of landlord and agent listings to the family, and to other aspects of program administration. The HA may not design such lists in order to steer families to particular areas, thereby reducing a family's opportunity to select available units, or discouraging the family from living anywhere the family may choose.

At the same time, the rule leaves the HA broad discretion and authority to provide information to families in a practical and helpful way. The HA is not required to provide a listing of every possible landlord known to the HA. The rule does not state that the HA must provide any specific number of listings.

Comments suggest that the HA should be required to give the tenant a list of owners that are barred from participation, so families don't waste time. HUD agrees that such information might be helpful in some markets, or for some owners or units. However, HUD is not persuaded that this practice will be universally beneficial, or should be mandated by federal regulation. In many cases, it may be difficult for tenants to correlate lists of barred ''owners'' with listings of units available for rental in the local market.

3. Information for Disabled Persons

The proposed rule would have required that if a member of the family were disabled, the HA must have provided information about current ''available'' accessible units known to the HA. Comments state that the HA does not know whether housing is available. Comments also state that the HA should be required to give the family information available to the HA of locations and contacts for accessible housing or other assistance.

HUD agrees that HAs can only furnish available information on possible openings in accessible units. The final rule provides that at the request of a family that includes a disabled person the HA must provide a current listing of accessible units ''known to the HA that may be available'' for rental to program participants. (§ 982.301(b)(14) (emphasis supplied))

Comments suggest that the oral briefing should use appropriate procedures for communication with the disabled. Existing HUD regulations at 24 CFR part 8 prohibit discrimination against disabled persons in administration of HUD assistance programs. Section 8.6 of these regulations requires recipients to take appropriate steps to assure effective communication with applicants and beneficiaries. The present rule is revised by adding a reference to these requirements. (§ 982.301(a)(4))

B. Giving an Owner Information About a Family

The proposed rule would have provided that the HA must give a prospective owner information in the HA's possession about rental history or drug-trafficking by members of the family.

Some comments agree that HUD should require or allow the HA to release information about the family to a prospective Section 8 owner. The comments claim that providing the information to owners will improve relations between the HA and landlords. Comments state that the HA should both inform the family about the owner, and the owner about the family.

Other comments contend that the HA should not act as a clearinghouse for tenant information. HUD should not require or allow an HA to give landlords information about prospective tenants. Determination of tenant suitability is the responsibility of the owner. The HA should not be involved in owner screening of tenants. The owner can check tenant references. The proposed and final rule provide that the HA must tell the owner that the HA has not screened the family for suitability, and that such screening is the owner's responsibility. Comments agree that the HA should so inform the owner.

The rule is revised to add a new provision stating that:

> ''Owners are permitted and encouraged to screen families on the basis of their tenancy histories. An owner may consider a family's background with respect to such factors as:
> (1) Payment of rent and utility bills;
> (2) Caring for a unit and premises;
> (3) Respecting the rights of others to the peaceful enjoyment of their housing;
> (4) Drug-related criminal activity or other criminal activity that is a threat to the life, safety or property of others; and
> (5) Compliance with other essential conditions of tenancy.'' (§ 982.307(a)(2))

Comments state that the release of information about a family to prospective owners may expose the HA to potential legal liability, or violate confidentiality requirements under federal or State law. The obligation for the HA to give landlords information on prospective tenants adds a new bureaucratic requirement, and forces an HA to maintain rental or behavioral data on individual tenants. Comments note that HA release of tenant information

may block the family's effort to find suitable housing.

Comments ask HUD to clarify what types of ''rental history'' must be communicated to a prospective landlord: Whether this term means rent-paying history, and whether the requirement is limited to bona fide file information or first hand information.

Other comments note HA files may contain hearsay, or inaccurate or disputed information about the family. Comments state that the HA should not release tenant information unless the HA obtained the information as the family's landlord, or has other direct knowledge that the information is truthful. Comments state that the HA should not give out information without a release from the tenant, or that the family should have the right to challenge information in the HA file. HA communication gives legitimacy to allegations of a prior landlord. Comments also suggest that landlords don't need information from the HA since landlords can check references, and criminal convictions are a matter of public record.

The final rule provides that when a family wants to lease a dwelling unit, the HA ''may offer'' an owner HA information about family tenancy history or drug trafficking. (§ 982.307(b)(2)) The rule does not require the HA to release the information.

However, the final rule provides that the HA must give the owner:

—The family's current address, as shown in the HA records.

—The name and address (if known to the HA) of the landlord at the family's current and prior address. (§ 982.307(b)(1))

The final rule requires the information packet for a newly selected family to include a statement of the HA policy on providing information to owners. (§ 982.301(b)(8)) The HA must give the same types of information to all families and to all owners. (§ 982.307(b)(3))

Under the final rule, the policy on release of family information to prospective landlords rests in the hands of the HA, the local agency charged with administration of the tenant-based program. The final rule merely confirms that HAs ''may'' offer the owner information about the family in the HA's possession, thus confirming that there is no federal bar to release of tenant information. However, the choice to exercise this option is the election of the HA. Some HAs will wish to release available information on program families, to enhance general owner confidence and willingness to lease units under the tenant-based programs. Other HAs will elect to avoid the legal exposure and potential administrative problems in processing or releasing tenant information.

In some States, there may be State or local laws affecting release of tenant information to owners. Such laws may require the release of such information, or may restrict the release of the information. The federal regulation is not intended to pre-empt the operation of such State or local laws.

If the HA wants to release tenant information, the HA must adopt a policy on providing information to owners. The release of information by the HA may not be left to casual ad hoc decisions of HA officials, but must be based on an explicit HA policy.

C. Requesting HA Approval To Lease a Unit

After a family is selected, the HA issues a certificate or voucher to the family. The family may search for a unit. The family must get HA approval to lease a unit with assistance in the program. The final rule restates and clarifies the procedure for requesting HA approval. (§ 982.302; § 982.303; § 982.305; § 982.306)

The proposed rule would have provided that the family requested approval to rent the unit, but did not refer to a ''request for lease approval''. The old program rules provided that a family submitted a request for lease approval to the HA. Public comments state the rule should keep the requirement to submit a request for lease approval. Comments note that a request for lease approval is signed by the landlord, confirms the landlord's agreement to rent the unit, and gives basic information on terms of the proposed leasing. The form of the request for lease approval facilitates review by the HA.

The final rule provides that the family must submit a request for lease approval, and a copy of the proposed lease, during the term of the certificate or voucher. (§ 982.302(c)) The HA has the discretion to permit a family to submit more than one request at a time. (§ 982.302(b)) The final rule also states that the HA may specify the procedure for requesting approval to lease a unit, and that the family must submit the request ''in the form and manner required by the HA''. (§ 982.302(d))

D. Term of Certificate or Voucher

The family must request lease approval during the term of the certificate or voucher issued by the HA. Extension or suspension of the term gives the family more time to find a unit and request HA approval. (§ 982.302; § 982.303)

Comments offer different recommendations on the extent of HA discretion to limit the term of a certificate or voucher. Some comments stress that an HA should be required to give a family ample time to use a certificate or voucher. Other comments state that HAs should have broad discretion to set local policies on the certificate or voucher term, and concerning any extension or suspension of the term. Comments note that the administrative plan should include the HA standards for granting extensions of the term.

Comments assert that the initial term should be longer than 60 days, or that the HA should be required to extend the initial term. Some comments state that families need more time to find housing, or to find units in non-minority or non-poverty neighborhoods. A comment recommends that the certificate or voucher should have an initial 120 day term. The comment states that the HA should be required to grant further extension if the family has made reasonable efforts to find housing during the initial term.

Other comments state that HUD should retain the maximum 120 day term (60 days plus an extension of up to 60 days) as under the old rule. 120 days is a reasonable time to find a unit. Comments also state that allowing HA discretion to set longer terms allows too much variation between local HA programs.

Some comments state that the rules should require the HA to suspend (toll) running of the term when the family has asked the HA for approval to lease a unit, and is waiting for HA action on the family's request. Unless the HA grants a suspension, the term continues to run, and the family may be discouraged from trying to lease a unit in non-minority or non-poverty areas. The family cannot control the time used by the HA in deciding to approve or disapprove the unit. The family may not have time to find another unit if the original unit is disapproved. Other comments suggest that suspension is unfair to other applicants waiting for housing.

Under previous HUD rules, the initial term of a certificate or voucher was a minimum of 60 days. At its discretion, the HA could extend the initial term up to a maximum of 120 days from the beginning of the initial term. This basic 60 day to 120 day pattern is continued in the final rule. The proposed rule did not set any maximum term. The HA could decide whether to grant extensions, and the length of any

extension. The final rule provides, as under the old rule, that the initial term plus any extensions may not exceed a total of 120 days. (§ 982.303(b)(1))

The family may ask the HA to extend the term up to the 120 maximum as a reasonable accommodation for a disabled person. (§ 982.303(b)(2)) If the HA believes that a longer time is necessary for this purpose in a special case, HUD will consider a request for regulatory waiver of the 120 day maximum.

At its discretion, in accordance with HA policy as described in the administrative plan, an HA may grant a ''suspension'' (tolling) of the certificate or voucher term if the family submits a request for lease approval during the term of a certificate or voucher. (§ 982.303(c)) ''Suspension'' means stopping the clock on the term of a family's voucher or certificate after the family submits a request for lease approval. (§ 982.4; § 982.54(d)(2)) The final rule permits the HA to grant a suspension for ''any part of'' the period running from the family's request for lease approval up to the time when the HA approves or denies the request. (§ 982.303(c))

The rule requires the HA to establish in the administrative plan a policy on when and whether extensions or suspension of the term may be granted, including how the HA decides whether to grant extensions or suspensions, and the length of any extension or suspension. (§ 982.54(d)(2))

E. HA Approval To Lease a Unit

The HA must determine that a unit meets program requirements. Before approving rental of a unit with assistance under the program, the HA must determine that:

—The unit is eligible housing;
—HA inspection shows that condition of the unit satisfies the housing quality standards (HQS);
—The lease is approvable and includes the ''lease addendum'' language required by HUD;
—The rent to owner is reasonable; and
—If the unit will be assisted under the certificate program, the total of contract rent plus any allowance for tenant-paid utilities does not exceed the FMR/exception rent limit. (§ 982.305(a)) The HA may not execute a HAP contract until all these requirements are satisfied.

The rule provides that all of the following actions must be completed before the beginning of the lease term:

—The HA has inspected the unit, and determined that the unit satisfies the HQS;
—The landlord and the tenant have executed the lease; and
—The HA has approved leasing of the unit in accordance with HUD requirements. (§ 982.305(b))

A public comment states that the rule should allow an HA to execute the HAP contract up to 60 days after commencement of the lease. Another comment argues that execution of the HAP contract before the HA has approved the unit would force the HA to pay rent to the owner before the HA has approved the unit and the lease. The final rule is consistent with the recommendations in these comments.

The final rule requires that the HAP contract must be executed no later than 60 days from the beginning of the lease term. (§ 982.305(c)(1)) However, the HA must use ''best efforts'' to execute the HAP contract before the beginning of the lease term. The HA may not approve the unit or execute the HAP contract until the HA has determined that the unit and lease meet all program requirements. (§ 982.305(a))

Comments object to the requirement that the lease must be executed before the beginning of the lease term. The final rule retains this requirement.

From the beginning of the lease term, the family's tenancy must be subject to the statutory and basic tenancy requirements stated in the required lease addendum. By execution of the lease, containing the required provisions, the lease requirements are contractually binding on the owner and the tenant. The lease makes explicit the intention of the family and the owner to establish a tenancy in accordance with requirements of the tenant-based programs.

Lease execution before commencement of the lease term is not difficult. Each family is given a copy of the lease addendum in the information packet. In general, owners are also familiar with this requirement. The requirement to execute the lease before the commencement of the term is also consistent with general practice in the private rental market.

The HA may not approve the unit or execute the HAP contract, until the HA determines that the tenancy meets all program requirements (as listed in the rule). (§ 982.305(a)) The HA must make ''best efforts'' to execute the HAP contract before the beginning of the lease term. (§ 982.305(c)(1)) The HAP contract must be executed within a maximum of 60 calendar days from the beginning of the lease term. (§ 982.305(c)(1)) In accordance with normal administrative fee procedures, the HA receives its administrative fee for each whole month the unit is under lease.

The rule is revised to clarify what happens if the HAP contract is not executed before the beginning of the lease term. The final rule provides that:

—The HA may not pay any housing assistance payment to the owner until the HAP contract has been executed. (§ 982.305(c)(2))
—If the HAP contract is executed during the first 60 days of the lease term, the HA will pay housing assistance payments after execution of the HAP contract (in accordance with the terms of the HAP contract), to cover the portion of the lease term before execution of the HAP contract (a maximum of 60 days). (§ 982.305(c)(3))
—Any HAP contract executed after the 60 days period is void, and the HA may not pay any housing assistance payment to the owner. (§ 982.305(c)(4))

Comments recommend that the rule should require the HA to approve the unit and lease in a specific short period from submission of the family request for lease approval. A period of 7 days is suggested. The recommendation to prescribe a rigid uniform period from family submission to HA approval is not adopted. The imposition of a uniform deadline is not practical for HAs operating in different housing markets, and as applied to the special circumstances of particular cases—for example, time needed so that an owner can correct HQS deficiencies. As noted above, however, the HA must execute the HAP contract within 60 days after commencement of the tenancy.

F. HA Disapproval of Owner

1. Mandatory Denial

The rule requires that the HA *must not approve* rental of a unit from an owner if the owner is subject to certain federal sanctions (debarment, suspension or denial of participation under 24 CFR part 24). (§ 982.306(a)) The HA may or may not know that an owner is subject to these sanctions. The final rule therefore specifies that the HA's obligation to reject the owner only applies if the HA has been informed of this fact by HUD or some other source.

The proposed rule would also have provided that the HA could never approve rental from the owner if HUD had initiated an enforcement action under the Fair Housing Act. The final rule is revised to provide that the HA must not approve rental from the owner *if so directed by HUD* when the owner has been the subject of equal opportunity enforcement proceedings.

(§ 982.306(b)) Automatic disapproval of owners who have committed fair housing violations might operate to deny housing opportunities for low-income or minority families. Such automatic denial may be inconsistent with fair housing policies. The appropriate remedy should therefore be determined by HUD in the circumstances of the particular case.

In addition, the final rule broadens the description of the proceedings for which such rejection should apply. The HA must disapprove the owner (when directed by HUD) if:

—The federal government has instituted an administrative or judicial action against the owner for violation of the Fair Housing Act or other federal equal opportunity requirements, and such action is pending.

—A court or administrative agency has determined that the owner violated the Fair Housing Act or other federal equal opportunity requirements. (§ 982.306(b))

The new provisions cover fair housing enforcement actions:

—By administrative or judicial action.

—For violation of the Fair Housing Act or other equal opportunity requirements.

Comments suggest that the HA should only be required to reject an owner because of complaints referred by the HA to a fair housing enforcement agency. This comment is not adopted. Rejection of an owner supports federal fair housing statutes, regardless of whether the complaint originated with the HA itself.

2. Discretionary Denial

The rule provides that the HA has administrative discretion to deny approval to lease a unit from an owner in certain other specified cases. (§ 982.306(c))

The proposed rule would have provided that the HA could deny approval if the owner had not paid State or local real property taxes. Comments both support and object to allowing or requiring the HA to refuse approval of an assisted tenancy on this ground. The final rule permits the HA to deny approval if the owner has not paid State or local real estate taxes, fines or assessments. (§ 982.306(c)(6)) The rule does not direct the HA to exercise this authority. Each local HA has administrative discretion whether or not to reject owner participation for this reason. By rejecting participation of owners who have not paid local levies, the HA gives the locality leverage for collection of delinquent accounts. Under the final rule, the HA may exercise this discretion for non-payment of local fines or assessments, in addition to local real property taxes.

The proposed rule would have provided that the HA could deny approval to lease a unit from an owner who had committed fraud or made any false statement in connection with any federal housing program. The final rule amends and broadens this language to provide that the HA may deny approval if the owner has committed ''fraud, bribery or any other corrupt or criminal act'' in connection with a federal housing program. (§ 982.306(c)(2))

The revision protects the integrity and purpose of federal housing assistance. The revision is intended to make clear that the HA has broad authority to reject participation of a Section 8 owner who has engaged in bribery or any other corrupt or criminal activity related to a federal housing program. The HA may decline to accept an owner, regardless of whether the owner's crime meets the technical indicia of ''fraud'' as defined by federal or State law. In a parallel revision, the rule also provides that the HA may deny or terminate assistance for a family that has committed corrupt or criminal acts in a federal housing program. (§ 982.551(k); § 982.552(b)(5))

The rule provides that the HA may reject an owner who has engaged in ''drug-trafficking''. (§ 982.306(c)(3)) As defined in the rule (§ 982.4), this term refers to commercial drug-dealing (manufacture, sale or distribution of narcotics), but does not cover illegal drug use. Comments ask why the rule only allows the HA to reject an owner who engages in drug-trafficking, but not for any other drug-related criminal activity. HUD believes that the rule is appropriately targeted at allowing the HA to bar drug dealing owners from its program.

The HA may reject an owner with a ''history or practice'' of violating Section 8 HQS or applicable housing standards under other federal housing programs. (§ 982.306(c)(4)) Comments mistakenly assert that the rule would require the HA to reject a unit if any owner has a history of minor HQS violation. In fact, the rule leaves the decision whether to reject an owner to the HA's administrative discretion. Comments recommend that HUD should define ''history or practice''. HUD believes that this is a sufficient description of the case to be covered. The individual HA may more precisely focus on types of owner behavior that should be reason for rejecting owner participation.

The rule specifies that for purpose of the provisions on HA disapproval of an owner, the term ''owner'' includes a ''principal or other interested party''. (§ 982.306(e)) Rental real estate is often held by a legal entity such as a limited partnership or corporation, rather than an individual. A real estate investor may have an interest in various properties held in the name of different legal entities, or may have an interest in various partnerships or enterprises. The rule clarifies that the ''owner'' is not merely the nominal entity that holds legal title to the property to be rented, but also covers other persons with an actual interest in the property. In applying the authority for rejection of an ''owner'' in specific cases, the HA may penetrate the veil of the form of ownership. The HA may deny approval to rent a unit from an entity in which the principal or other interested parties have engaged in activities that are grounds for denial. For example, the HA may deny approval to rent from a partnership where a general or limited partner has committed fraud in connection with a federal housing program.

Comments recommend that HUD should require disclosure of any individual or corporation with an ownership interest of more than 10 percent. The HA may require a prospective owner to disclose ownership information, so that the HA can determine if the owner should be rejected or approved. However, HUD will not direct HAs to require disclosure, and will not regulate the nature or form of owner disclosure.

Comments recommend that HUD should allow an HA to reject an owner who has used foul language or threats against HA staff or tenants. This comment is not adopted.

3. HA Policy

Comments suggest that an HA should not have discretion to decide the criteria for disapproving owners. The HA should only determine whether an owner has committed an action that is grounds for disapproval. Comments also recommend that the rule should require an HA to use the same criteria for approval or disapproval of all owners. Comments state that HUD should only permit disapproval based on reliable and credible evidence, and that the HA should only be allowed to disapprove an owner because of ''recent'' owner action.

The final rule provides that the HA administrative plan must include the HA policies on disapproval of owners. (§ 982.54(d)(8)) Since HUD has eliminated the requirement for HUD approval of the administrative plan, the HA policies on owner approval are not routinely submitted for HUD review or

approval. (Of course, HA administrative policy and practice are subject to HUD audit, review and required revision.)

HAs may only reject owners for any of the grounds listed in the rule. However, HAs retain broad discretion is deciding whether and how to exercise the authority to reject owners for any of the allowable discretionary grounds. The HA may determine the practicality and benefit of rejecting owners for such grounds, in the locality, and as applied to the circumstances of each individual case.

The decision to reject the owner rests in the discretion of the HA. HUD will not require the HA to establish any special type of process or evidentiary standard. HUD believes that the imposition of such requirements would discourage HAs from rejecting owners for good and substantial reasons, such as the owner's practice of renting units that violate local code. The rule confirms explicitly that owners do not have a right to participate in the program. (§ 982.306(d)) Therefore the rejection of an owner's participation does not affect any owner right or property interest. The HA may exercise its discretion to reject an owner in accordance with local policy, and available information.

G. Tenancy

1. Tenant Definition

The proposed rule would have added a new definition of the term ''tenant''. The proposed definition would have provided that a tenant was the ''adult'' member of the assisted family who executed the lease as lessee of the dwelling unit. Comments state that the new definition is helpful, and approve adding this defined term.

The final rule revised the proposed definition by removing the provision that the tenant must be an ''adult'' member of the family. In the final rule, the term ''tenant'' is defined as ''the person or persons (other than a live-in-aide) who executes the lease as lessee of the dwelling unit''. (§ 982.4) The rule text clarifies that a tenant must have legal capacity to enter into a lease under State and local law. (§ 982.308(a)).

2. Approval of Lease

Any new lease or revision must be approved by the HA. Before approval, the HA must determine that the lease meets program requirements under the rule. (§ 982.308(b))

A lease must be executed by the tenant and the owner before the beginning of the lease term. (§ 982.305(b)(2)) The lease must also be approved by the HA before the beginning of the term. (§ 982.305(b)(3)) Any new lease or revision must be approved in advance by the HA, and must comply with program requirements. (§ 982.308(b); § 982.309(e)(1))

The rule provides that if the tenant and the owner enter into a new lease or revision, the HA and owner must enter into a new HAP contract to subsidize the tenancy under the new lease or revision. (§ 982.309(e)(1)) Comments recommend eliminating the requirement for execution of a new HAP for this purpose. This recommendation is not adopted. The rule continues to require the use of a simple and uniform process for commencement of the assisted tenancy—by execution of a lease and HAP contract in each case. The HAP contract expresses the HA's agreement to subsidize the tenancy under the new or revised lease.

3. Contents of Lease

The proposed rule would have required the lease to include word-for-word all provisions required by HUD, and barred any provisions prohibited by HUD. The lease language required by HUD is called the ''lease addendum''. (§ 982.308(c)(1)) The final rule provides that the lease must include word-for-word all provisions required by HUD. (§ 982.308(c)(2)) The rule provides that if there is any conflict between the provisions required by HUD (lease addendum) and other provisions of the lease, the provisions required by HUD shall control. (§ 982.308(c)(3))

The lease addendum must state that certain types of lease provisions are prohibited. (§ 982.308(d)) The statement of prohibited lease provisions for the certificate and voucher programs in the proposed rule is the same as language previously used in the old voucher rule. This language is similar to, but more simply and clearly stated, than the description of prohibited lease provisions in the old certificate rule. A comment recommends that HUD should use the version of prohibited lease provisions in the old certificate rule. This comment is not adopted.

In all cases, the assisted lease must include the *verbatim* language of the lease addendum. An HA may develop a model program lease that may be offered for use by families and owners. A model lease must include the language of the lease addendum, and must comply with program requirements. However, the new rule prohibits the HA from requiring families and owners to use a model program lease prescribed by the HA. (§ 982.308(c)(2))

HA comments object to the prohibition against requiring use of an HA model lease. Comments state that use of a model lease saves an HA the cost of reviewing leases to assure compliance with required lease provisions. HUD believes that mandating use of a model lease may unduly restrict family choice of available housing. Owners may refuse to execute program leases in the form of the HA-prescribed model lease rather than using a form of lease familiar to the owner.

Comments recommend that the HA should be permitted to disapprove a lease that does not comply with State or local law. This comment is adopted. The final rule provides that the HA may review the proposed lease to determine if the lease complies with State or local law, and may decline to approve the lease if it does not comply with State or local law. (§ 982.308(f)) It should be emphasized, however, that the federal rule does not *require* that the HA review the lease for compliance with State or local law. The decision to undertake such review, or to decline lease approval for this reason lies in the HA's discretion.

4. Term of Tenancy

The rule provides that the initial term of the lease must be for at least one year, and must provide for ''automatic renewal'' after the initial term. The lease may renew by an automatic indefinite extension or by automatic extension for successive definite terms (for example, month-to-month or year-to-year). (§ 982.309(b) (1) and (2))

The lease terminates if any of the following occurs:

—The owner terminates the lease.
—The tenant terminates the lease.
—The owner and the tenant agree to terminate the lease.
—The HA terminates the HAP contract.
—The HA terminates assistance for the family. (§ 982.309(b)(3))

The term of the lease and the HAP contract are the same. The term of the HAP contract follows the term of the lease. (§ 982.309(a)(1)) The lease ends when the HAP contract ends. (§ 982.309(b)(2)(iv)) The HAP contract ends when the lease ends. (§ 982.309(a)(2))

Comments approve the clarification that the initial lease term is one year. Comments also approve the new language on automatic extension of the initial year term, noting that the new regulation clears up confusion under the prior rule. (§ 982.309(b) (1) and (2))

The owner may offer the family a new lease, for a term beginning at any time after the initial term. The owner must give the tenant at least 60 days written

notice of the offer. Comments recommend that the owner should also be required to send the HA a copy of the offer. The comment is adopted. (§ 982.309(e)(2))

Rent to the owner and the family share of rent may change during the assisted lease. The rule does not require the execution of a new lease or HAP contract for a change in family share in accordance with HUD requirements, or a change in rent to owner in accordance with the HA approved lease.

5. Termination of Tenancy

The rule and the statute provide that an owner may terminate an assisted tenancy for serious or repeated violation of the lease, violation of tenancy obligations under federal, State or local law, or other good cause. (42 U.S.C. 1437f(d)(1)(B)(ii); § 982.310) The final rule provides that the owner may terminate tenancy for these grounds ''during the term of the lease''. (§ 982.310(a)) The federal requirements for termination of tenancy only apply during the term of the assisted lease, but do not apply after a termination of the assisted lease—for example, where the lease has terminated automatically because the HAP contract has terminated.

Other Good Cause

As under the old rule, the rule provides that ''other good cause'' for termination of tenancy by the owner may include, but is not limited to, any of the following examples:

—Failure by the family to accept the offer of a new lease or revision;
—A family history of disturbance of neighbors or destruction of property, or of living or housekeeping habits resulting in damage to the unit or premises;
—The owner's desire to use the unit for personal or family use; or
—A business or economic reason for termination of the tenancy (such as sale of the property, renovation of the unit, desire to lease the unit at a higher rental). (§ 982.310(d))

Comments recommend that HUD give more definition of ''other good cause'', and suggest that the existing provisions have been used as ''legal loopholes'' for owner eviction of tenants. The recommendation is not adopted. The statute permits eviction after the first year for ''other good cause'', as well as for family violation of the lease. Eviction for good cause is not a ''loophole'', as asserted by the comment, but is a ground for eviction specifically provided in the statute. If an owner seeks to evict for this reason, the existence or non-existence of cause is determined by the court in the owner's eviction action. The good cause provisions in the present rule are largely the same as provisions promulgated by the Department in 1984 for the certificate program (and subsequently incorporated in regulations for the voucher program). In the preamble to the 1984 rule, the Department noted that:

> ''a comprehensive regulatory definition of good cause in the Section 8 Existing Housing Program (i.e., the certificate program) is neither possible or desirable. The good cause category should remain open to case by case determination by the courts. It is a prime virtue of this statutory category that it permits termination by owner in types of cases which cannot be readily foreseen.'' (49 FR 12233, March 29, 1984)

The rule recites key ''examples'' of cases that may be good cause, but explicitly states that ''other good cause'' is not limited to the listed examples. In the 1984 rule, HUD stated that:

> ''The good cause concept should be flexible and open to application in concrete cases, but there is a critical need to provide explicit regulatory assurance to prospective section 8 owners that legitimate owner concerns will be recognized as grounds for termination of tenancy * * *. (T)his assurance may be essential to promote broad participation by owners.'' (Id.)

Criminal Activity

The rule provides that the owner may evict a tenant for any criminal action that threatens persons who reside in the ''premises'' or the ''immediate vicinity''. (§ 982.310(c)) In the rule, ''premises'' is defined as the building or complex in which the dwelling unit is located, including common areas and grounds. (§ 982.4) Comments support allowing eviction because of threats to persons who reside in the vicinity. However, comments also recommend that HUD should allow the owner to evict because of criminal activity that is a threat to the owner's representative or staff.

An owner may only terminate a tenancy in Section 8 existing housing for the grounds specified in the law. (42 U.S.C. 1437f(d)(1)(B)) The rule implements statutory provisions which explicitly confirm that the owner may evict a tenant for criminal activity that is a threat to residents. The statute does not refer to criminal activity that is a threat to other persons, who do not reside in the housing or the vicinity, and does not refer to representatives of the owner. However, threats or harm to owner representatives by the assisted household or its guests may be ground for eviction if the threatening activity constitutes a serious or repeated lease violation or is ''other good cause'' for eviction of the tenant.

The rule permits an owner to evict the tenant for drug-related criminal activity ''on or near'' the premises. (§ 982.310(c)(3)) Comments state that the program should not assist persons who engage in drug-trafficking, whether the activity occurs on or off the premises. The law provides that the owner may terminate tenancy because of any drug-related criminal activity ''on or near'' the assisted premises. (42 U.S.C. 1437f(d)(1)(B)(iii)) The language of the HUD rule follows the eviction standard prescribed in the law.

During the term of an assisted lease, an owner may not evict a tenant for drug crime unless the crime takes place ''on or near'' the housing (unless the behavior is a serious or repeated lease violation or is otherwise ''other good cause'' for eviction of the tenant). However, the HA may terminate program assistance for drug-related criminal activity or violent criminal activity by a family member, regardless of where the criminal activity takes place. (§ 982.553) HUD has explained the reason for this policy:

> ''The Department has not limited the proscribed (drug-related or violent criminal) activities under this rule to activities carried out on or near the premises. Section 8 certificates and housing vouchers are a very mobile form of housing assistance. The holder can lease suitable housing with Federal subsidy assistance anywhere in the PHA's jurisdiction, in the metropolitan area, or in a contiguous metropolitan area. If a PHA were (only) permitted to terminate assistance for activities on or near the assisted premises, the deterrent effect of this policy would be substantially diminished because the family could lease housing outside the area where the family member engages in the proscribed activities. Furthermore, if the rule were limited to activities engaged in on or near the premises which are being leased with Section 8 assistance, the rule would not authorize a PHA to deny Section 8 assistance to a former public housing tenant evicted for drug-dealing in public housing * * *.'' (55 FR 28538, 28540, July 11, 1990)

The lease terminates when the HA terminates assistance for the family. (§ 982.309(b)(3)(v))

Under the law and this rule, the owner may evict for drug crime ''on or near'' the premises. Comments suggest that the rule should cover crime in an adjoining street, alley or other public right of way. In this rule, HUD tracks the statutory standard, and does not attempt to further define when a crime location is considered ''near'' the assisted project or building. In general, this standard would cover drug crime in a street or other right of way that adjoins the project or building where a Section 8 unit is located. A landlord-tenant court

can apply the statutory standard to the circumstances of a particular case.

6. Nature of Assisted Tenancy

Comments claim that the rule provides for a perpetual lease, and discourages owner participation. Comments state that the rule prohibits the owner from selling the assisted unit, and allows the HA to reduce owner rents at will. Comments state that rule should allow termination of tenancy without cause by the family or the owner after the first year of the lease term. Comments assert that the owner is locked in, whereas the family can terminate the lease on 60 days notice at the end of the first year. By contrast, other comments claim that the rule undermines existing protections for the tenant.

In fact, the rule does not undermine existing protections for the tenant or the owner. Rather, HUD believes that the rule reflects a reasonable balance between the interest of the assisted tenant and the owner within the context of the existing law. On the one hand, the lease protects the tenant against arbitrary and ungrounded termination by the owner. On the other hand, the owner is not locked in, but may terminate the tenancy for lease violation or other good cause.

After the initial year, the family may terminate the tenancy on notice to the owner. After the initial year, the owner may terminate the tenancy for other good cause—specifically including a ''business or economic reason'' for termination of the tenancy. The rule does not, as claimed by the comments, prohibit the owner from selling the unit. The rule specifically states that a business reason for termination after the initial year may include ''sale of the property''. (§ 982.310(d)(1)(iv))

7. Notice by Owner

Notice of Grounds for Termination

By law, the owner must give the tenant a written notice that specifies the grounds for termination of tenancy. (42 U.S.C. 1437f(d)(1)(B)(iv))

The proposed rule would have provided that the owner's notice of grounds for termination could have been combined with and run concurrently with any notices required under State or local law. Comments suggest that the owner should be required to give the notice of grounds with owner's notice to vacate, not later with the summons, complaint or other pleading. HUD should require a minimum notice period before commencement of the eviction action. The comment notes that advance notice of eviction allows time for the tenant to negotiate a resolution, and gives an opportunity for the HA to protect both the tenant and the HA interest.

The final rule clarifies that the owner must give notice of the grounds for eviction at or before commencement of the eviction action. (§ 982.310(e)(1)(i)) The notice may be included in, or may be combined with, any other owner eviction notice to the tenant. (§ 982.310(e)(1)(ii)) Such other owner eviction notice means a notice to vacate, or a complaint or other initial pleading used under State or local law to commence an eviction action. (§ 982.310(e)(2)(i))

Comments recommend that the rule require notice with sufficient specificity to prepare a defense. The rule does not specify the form or contents of the statutory notice. The rule also does not prescribe the point at which the notice must be given, so long as the owner gives notice of grounds at or before commencement of the eviction action.

Comments propose that the owner should be required to notify the HA at the same time as the tenant. The final rule provides that the owner must give the HA a copy of any owner eviction notice to the tenant. (§ 982.310(e)(2)(ii))

Termination of HAP Contract—90 Days Notice

The owner must give 90 days notice before a termination of a tenant-based HAP contract because of:

—Owner ''opt-out''.

—''Expiration'' of the HAP contract.

The owner must give written notice of the termination to the family, the HA and HUD. (42 U.S.C. 1437f(c)(9) and (10), § 982.455(b)(3))

The rule provides that expiration occurs in two cases:

—Automatic termination of the HAP contract. The proposed rule would have provided that the contract terminates automatically *three months* after the last housing assistance payment. The final rule now provides that the HAP contract terminates *six months* (180 calendar days) after the last housing assistance payment. (§ 982.455(a))

—A HUD determination to terminate the HAP contract because there is insufficient funding to support continued assistance for the family.

''Opt-out'' refers to owner termination of tenancy for a business or economic reason. (§ 982.455(b)(2)(ii); see 42 U.S.C. 1437f(c)(9))

On receiving the owner notice, the HUD field office must review the notice and consider whether there are additional actions which should be taken to avoid the termination. (§ 982.455(b)(4)(i)) The final rule adds a new provision clarifying that the owner may proceed with eviction whether HUD approves or disapproves, or fails to complete the required review of the owner notice before expiration of the 90 day review period. (§ 982.455(b)(4)(iv))

For a unit assisted under the certificate program, the proposed rule would have provided that when HUD received notice of an opt-out *or expiration*, HUD would have been required to offer the owner the opportunity to enter into a new HAP contract at the maximum rent allowed for a new program tenancy (subject to the FMR/exception rent limit and the reasonable rent limit). The final rule provides that HUD must offer a new HAP contract only when the owner gives notice of an opt-out, but not in the case of an expiration. (§ 982.455(b)(4)(ii)(B))

Comments recommend that the 90 days notice procedure should apply to a termination because an owner wants to use the unit for personal or family use. HUD should evaluate the lawfulness of the termination, and offer incentives for the owner to keep the unit in the program. This comment is not adopted. In the tenant-based programs, an ''opt-out'' only applies to an owner's termination of tenancy for a business or economic reason.

Comments recommend that the requirement to give notice of grounds for eviction should not apply to an owner opt-out. This comment is not adopted. Owner's 90 days opt-out notice must state the reasons for the termination, and will simultaneously satisfy the requirement to give notice of grounds for termination.

8. Rent

Nonpayment of Housing Assistance Payment

The final rule provides that the family is not responsible for payment of the portion of rent to owner covered by the housing assistance payment under the HAP contract between the owner and the HA. (§ 982.310(b)(1); § 982.451(c)(4)(iii)) The HA failure to pay the housing assistance payment to the owner is not a violation of the lease between the tenant and the owner. During the HAP contract term, the owner may not terminate the tenancy of the family for nonpayment of this amount. (§ 982.310(b)(2))

Application of Tenant Payments

Comments recommend that the rule should specify how tenant payments are applied. The comments state that HUD

should require that tenant payments must first be applied to current rent, and that any excess should be first applied to other rent, and only then to other non-rent purposes. The comment is not adopted. HUD has no reason for such micromanagement of the Section 8 tenancy. HUD will leave such questions for resolution in accordance with the lease and local law.

9. Owner Late Fee

As in the past, the rules do not include any federally-imposed limitation on owner charges of fees against the tenant for late payment of rent in accordance with the lease and State and local law. Comments recommend that the rule should limit owner late fees, should allow a grace period for late payment of rent, and should prohibit eviction for non-payment of late fees. The comments are not adopted.

HUD seeks to minimize interference in the relationship between landlords and assisted tenants in order to encourage owner participation in the program. In these programs, any regulation of tenant-paid late fees will be left to local policy, rather than encumbered by special HUD-imposed requirements that only apply to a subsidized tenancy. HUD also believes that owner assessment of late fees can perform a legitimate role as an encouragement for timely payment of the tenant share of rent.

The owner receives the total rent (''rent to owner'') from two sources—the housing assistance payment portion from the HA, and the tenant portion from the family. Comments propose that HUD should prohibit charging late fees to the tenant for delays in the HA payment to the owner. The rule is revised to clarify the respective obligations of the HA and the family to the owner for payment of the HA and tenant portions of the rent, and for late fees for late payment by the HA or the tenant. The rule now provides that the tenant is not responsible for paying the HA share of the rent. This change will eliminate any basis for a late charge against the tenant for the HA share of the rent.

The final rule is revised to confirm that the HA must pay the owner promptly when the housing assistance payment is due in accordance with the HAP contract. (§ 982.451(c)(5)) In addition, the rule provides that if the HA fails to make timely payment, the HA ''may be obligated'' to pay a late fee ''in accordance with State or local law''. However, unless authorized by HUD, the HA may only use administrative fee income or administrative fee reserve for payment of any such late fee. The HA may not use other Section 8 program receipts to pay a late fee to the owner.

10. Termination and Notice by Family

Notice of Termination or Move

The family may terminate a lease after the first year. The lease may not require the family to give the owner more than 60 days notice of the termination. (§ 982.309(d)(1))

The family must notify the HA before moving from the unit, and must give the HA a copy of any lease termination notice by the family to the owner. Failure to notify the HA before the family moves, or to give the HA a copy of the family's termination notice to the owner, is a breach of family obligations under the program. (§ 982.309(d)(2); § 982.309(f); § 982.551(g)(2))

Family's Right To Terminate the Lease

Comments express some confusion concerning the family's right to terminate the lease on notice to the owner (under the existing and the proposed rule). Some comments state that the family can move on one day or other short notice to the landlord. Other comments state that such short notice to landlords is unfair, discourages owner participation, and is inconsistent with standard leasing practice. Other comments assume that the tenant is required to give 60 days notice. Comments recommend that the family should be required to give the owner and the HA at least 30 days notice of termination. Comments state that the family should be required to give minimum notice to the owner in accordance with State and local law. Comments ask HUD to clarify the relation between termination by tenant notice, and the provisions for definite or indefinite extension of the initial lease term.

Some Section 8 lease requirements are prescribed by HUD. These requirements are contained in the required ''lease addendum''. Except for these program lease requirements, the terms of a Section 8 tenancy—like any private market tenancy—are governed by State law and the language of the particular lease executed by the tenant and the owner. The individual lease between a particular tenant and owner contains both the standard lease addendum and any other lease provisions agreed by the parties.

A tenant's right to terminate the lease, and the length of any required termination notice, depend on the terms of the lease. It is not true, as assumed by some comments, that the rule gives a Section 8 tenant the right to terminate the tenancy during the first year, or that the tenant may terminate on one day or other short notice. In fact, there is nothing in the HUD rule or HUD-prescribed lease addendum permitting the tenant to terminate the lease during the first year of the lease term.

The Section 8 tenant may terminate the lease at any time after the first year. (§ 982.309(d)(1)) The program rule and lease addendum only provide that the lease may not require the tenant to give more than 60 days notice to the owner. In other respects, the particulars of the tenant's right to terminate the tenancy depend on local law and the terms of the tenant's lease.

In allowing the tenant to terminate after the first year (on no more than 60 days notice to the owner), the rule seeks to provide rough symmetry between the legal positions of the tenant and the owner. During the first year, an owner may not terminate the tenancy for ''other good cause'' unless the owner is evicting because of some action or non-action by the family. (§ 982.310(d)(2)) After the first year, the owner may terminate for any ''other good cause'' (including termination for a business or economic reason), not limited to termination because of action or non-action by the family. After the first year, the tenant may terminate the lease on notice to the owner.

11. Security Deposit and Owner Claims When Family Moves

Proposed Rule

The owner may collect a security deposit from the family. As in the past, the proposed rule would have limited the amount of the security deposit. The proposed rule would have provided that the maximum security deposit was one month's rent.

The proposed rule would have provided that an owner could claim reimbursement from the HA for tenant damage and unpaid rent. The owner could collect a claim for one month's rent minus the maximum security deposit allowed by the HA. Under the proposed rule, the HA could therefore have eliminated owner reimbursement claims by permitting the owner to collect one month's rent as a security deposit.

Comments

Comments make various recommendations concerning the amount of the maximum security deposit. Some comments claim that a tenant can't afford to pay a one month deposit. Comments claim that the authorization to collect one month's rent as a security deposit forces the

family to lease a unit where the rent is low. Comments recommend that the security deposit should be one month's family contribution (generally 30 percent of family income).

Comments recommend allowing owner damage claims for up to two months rent. These comments assert that the damage claim protection is an important tool in persuading owners to rent to program families. Other comments suggest that it would be better to eliminate owner claims by increasing the maximum allowable security deposit. Family payment of the security deposit promotes family responsibility. The security deposit gives the tenant an incentive to minimize the owner's claim for damage or unpaid rent.

Comments recommend that HUD should direct HAs to comply with a federally-mandated timetable for processing of owner claims.

Final Rule

The final rule eliminates the right of the owner to claim reimbursement from the HA for damages or other amounts owed by the tenant under the lease. In this respect, the assisted tenancy will function more like an ordinary tenancy in the private market. The owner must look to the tenant for payment of any damages.

The final rule also eliminates the HUD-imposed limit on the amount of owner security deposits. The rule provides that the owner may collect a security deposit. (§ 982.313(a)) The HA is not required to set any limit on the owner security deposit. However, the HA has discretion to prohibit security deposits in excess of private market practice, or in excess of security deposits for the owner's unassisted units. (§ 982.313(b))

HUD believes that these changes tend to produce significant benefits.

—Elimination of unnecessary distinctions between the tenant-based program and a private market tenancy encourages broader participation by owners of units outside of areas of minority and high poverty concentration.

—The owner can no longer rely on the HA to pay tenant damages or unpaid rent. This change gives the owner a stronger motivation to screen assisted families the same as for unassisted private market tenants, and to check for unit damage during occupancy.

—This change in turn reinforces the incentive for a program family to take care of its unit before and during assisted occupancy.

—As suggested by comments, the need for the tenant to make a larger security deposit from its own pocket creates a greater incentive to avoid damage to the unit, and owner claims against the security deposit.

—The elimination of owner claims relieves a major administrative burden. The old owner claim procedure forced HAs to determine whether a unit was damaged during occupancy, and whether any damage was the fault of the tenant. Under the old system, it was often hard for the HA to know who caused unit damage, and to sort out bona fide owner claims. Elimination of the old claim system eliminates the need to develop and operate a claims process that is fair to both families and owners.

—Since HAs will not pay owner claims, HAs will not deny or terminate assistance for failure to pay such claims. The change will tend to eliminate over time issues concerning denial or termination of a family's assistance for failure to reimburse amounts paid by the HA in owner claims on behalf of the families, including the need for repayment agreements or for hearings to determine whether an owner's claim was properly paid.

—Elimination of the old claim system saves both the amounts paid out in claims and the cost of administration.

12. HA Payment After Family Move-Out

The rule provides that if a family moves out, the owner may keep the housing assistance payment for the month when the family moves out. The HA may not make any further payments. (§ 982.311(d)(1)) Comments state that HUD should allow vacancy payments for an additional month. The comments claim that an additional vacancy payment is an incentive for owner participation, and is needed to attract owners of higher quality units. Comments state that the elimination of vacancy claims for the month after move-out is unfair to participating owners.

The final rule provides, as proposed, that payments will not be made after the month of move-out. In the voucher program, the statute prohibits assistance payments after the month the unit is vacated. (42 U.S.C. 1437f(o)(4)) The provision of a vacancy payment absorbs funds that can be used to subsidize actual occupancies. Further, the use of subsidy payments for vacant units is an unnecessary departure from normal private market incentives and practice. In the tenant-based programs as in the private market, owners can charge a rent comparable to rents for a private unassisted rental. HUD is not persuaded that this additional incentive is necessary or desirable to give program families a reasonable access to units in the rental market. The voucher program has functioned well without this incentive to owner participation.

13. New Rule: Effect on Existing Tenancy

Comments ask how the changes under this rule affect existing tenancies, and HAP contracts, that were entered before the new rule. Comments ask if existing HAP contracts continue until termination, or if contracts must be amended at the next recertification. Comments express concern that the mode of implementing new regulatory requirements may cause administrative burden and expense.

Nothing in the rule overrides or impairs the terms of outstanding HAP contracts or leases entered into under the old regulations. The rights of owners and tenants are determined by the provisions of existing HAP contracts and leases. Owners and tenants are not required to enter into new HAP contracts and leases. Housing assistance payments will be made to the owners in accordance with the terms of the existing HAP contracts.

An HA may encourage owners and tenants to execute new leases and HAP contracts, in place of the existing contracts. However, the HA is not required to convert the old contracts, and may not force the owners and families to execute new contracts in accordance with the new requirements. Any HAP contract entered into after the effective date of the new rule must comply with requirements of the rule, and must be executed on the HUD-prescribed form. Similarly, the HA may not approve any new lease or revision unless the lease is in accordance with the new rule.

H. Illegal Discrimination—HA Help for Family

Several provisions of the proposed rule indicate that an HA must help a family that can't lease a unit because of illegal discrimination. Comments ask HUD to state what the HA should do to assist the family. The final rule requires that when a family claims that illegal discrimination prevents the family from leasing a suitable unit under the program, the HA must give the family information on how to fill out and file a housing discrimination complaint. (§ 982.304)

I. When Housing Assistance Payments May Be Paid to Owner

The proposed rule would have provided that the HA could only have made housing assistance payments to

the owner for a period the dwelling unit was leased to and occupied by the family. The final rule provides that:

—Housing assistance payments shall be payable to the owner in accordance with the terms of the HAP contract.
—Housing assistance payments may only be paid to the owner during the lease term, and while the family is residing in the unit. (§ 982.311(a))

The final rule also specifies that housing assistance payments terminate if:

—The lease terminates,
—The HAP contract terminates, or
—The HA terminates assistance for the family. (§ 982.311(c))

The final rule clarifies the principles governing continuation of payments to an owner during an eviction. The final rule provides that:

''Housing assistance payments terminate when the lease is terminated by the owner in accordance with the lease. However, if the owner has commenced the process to evict the tenant, and if the family continues to reside in the unit, the HA must continue to make housing assistance payments to the owner in accordance with the HAP contract until the owner has obtained a court judgment or other process allowing the owner to evict the tenant. The HA may continue such payments until the family moves from or is evicted from the unit.'' (§ 982.311(b))

J. Absence From Unit

Occupancy of Unit by Family

Section 8 is intended to provide subsidy for a unit leased to and occupied by a low-income family. (See 42 U.S.C. 1437f) The family is obligated to use the assisted dwelling for residence by members of the family. (§ 982.551(h)(1)) The unit must be the family's only residence.

The proposed and final rule state that the HA administrative plan must include provisions governing how long the family may be absent from the dwelling unit, and under what circumstances. The final rule includes a more complete statement regarding HA policy on absence of the assisted family from the unit. (§ 982.312)

The proposed rule would not have set any HUD-prescribed limit on the length of family absence from the assisted unit. In the proposed rule HUD invited comment on whether the regulation should establish a specific federally defined outer limit on the time for which subsidy may be paid for an empty unit, for specific causes or for any cause.

Absence From Unit: Comments

Public comments contain a spectrum of recommendations on the degree of HA discretion to establish policies on the length of family absence from an assisted unit:

—The HA should not have any right to terminate subsidy because of family absence.
—The HA should have total discretion to set policy on family absence.
—The HA should have discretion to set policy within limits established by HUD.
—HUD should set policy on family absence. The HA should not have discretion to determine the policy.

Some comments object to granting the HA any power to limit family absence. The HA should not be permitted to terminate assistance unless the family abandons the unit. The family should be treated like any renter. Comments also object to requiring that the family must only use the assisted unit for residence by the family. Comments state that this requirement burdens the family's freedom of movement and choice of occupation.

Comments state that the HA should not establish a fixed cut-off because of family absence from the units. The HA should consider the facts of each case, including the length and reason for absence, and the family's intention to return. The HA should not be allowed to terminate assistance where the resident is absent:

—Because of employment, such as absence of a migrant worker.
—Because the resident is in drug treatment or prison.
—Because the resident is in a nursing home.

Comments state that an HA's absence policy should distinguish between voluntary absence, as opposed to absence because the resident is being treated for a disability. Comments state that the HA should not terminate assistance unless the family fails to pay for rent or utilities. Comments claim that termination of assistance because of family absence discriminates against single person families, and violates the Constitutional right to travel.

Most comments agree that HAs should have broad discretion to establish local limits on absence from the unit. Some comments recommend that HAs should have complete flexibility to determine policies on absence from the unit, and that HUD should not set any maximum. Other comments propose that HAs should have discretion within outer limits set by HUD. Comments state that a HUD-imposed maximum is appropriate so that practices of different HAs are consistent. Comments note that consistency is desirable because of portability. Some comments recommend that HUD should establish uniform rules on family absence.

Comments also contain a wide range of recommendations on the maximum length of absence from the unit (from 30 days to one year), and of factors that should affect the period in which the HA continues payments for an unoccupied unit. For example, comments propose allowing a longer maximum absence period for cases where the resident is absent because of documented illness or employment; or that assistance should be terminated immediately if the resident is imprisoned. Comments propose that the maximum absence period should be the same as the period for automatic termination of assistance where the HA has not made any assistance payment under the HAP contract (i.e., where the income-based family share equals the full rent to owner).

Comments note that assistance should terminate right away if the family has permanently vacated the unit. The HA should have power to determine whether the family has vacated the unit.

Comments state that the HA must give the family notice and opportunity for a hearing before terminating assistance because of family absence.

Absence From Unit: Final Rule

The final rule provides that: ''The family may be absent from the unit for brief periods. For longer absences, the HA administrative plan establishes the HA policy on how long the family may be absent from the assisted unit. However, the family may not be absent from the unit for a period of more than 180 consecutive calendar days in any circumstance, or for any reason. At its discretion, the HA may allow absence for a lesser period in accordance with HA policy. (§ 982.312(a))

''Absence'' is defined to mean that no member of the family is residing in the unit. (§ 982.312(c))

The HA has broad discretion to set local policy on family absence, but must state these policies in the HA administrative plan. (§ 982.54(d)(10); § 982.312(e)) The policy includes:

—How the HA determines whether or when the family may be absent, and for how long. For example, the HA may establish policies on absences because of vacation, hospitalization or imprisonment. (§ 982.312(e)(1))
—Any provision for resumption of assistance after an absence, including readmission or resumption of assistance to the family. (§ 982.312(e)(2))

The final rule requires termination of housing assistance payments if the

family is absent from its assisted unit for longer than the maximum permitted absence. The term of the HAP contract and assisted lease also terminate. (§ 982.312(b)) Before terminating payments under the HAP contract, the HA must give the family the opportunity for an informal hearing. (§ 982.555(a)(1)(vi); § 982.555(a)(2)) The owner must reimburse the HA for any housing assistance payment for the period after the termination. (§ 982.312(b))

Under the final rule, the HA has great flexibility to establish local policies on tenant absence, including different rules on the length of allowable absence in different circumstances. The family may be absent for ''brief'' periods. However, a family may not be away from the unit for more than 180 consecutive days in any circumstances. The HA has broad discretion to set policy for absences of less than 180 days.

As suggested by some comments, the 180 maximum absence interval is the same as the interval for termination of the assistance contract because no assistance is paid (termination because family contribution equals the maximum HUD subsidy). (§ 982.455(a)) In the case of family absence, assistance payments are terminated so that the HA does not waste subsidy by continuing to pay for an empty unit. In the case where no assistance has been paid for 180 days, the assistance contract is terminated so that the program slot can be freed-up and used for another family (even though the unit is occupied and the HA is not making any payment for the unit).

As suggested by comments, HAs must distinguish between cases of prolonged absence from a unit, and cases where the family simply moves out of the unit. If the family moves out, the HA may not continue assistance after the month when the family moves out. If the family has not moved out, but is absent from the unit, the HA may elect to continue assistance payments for a maximum of 180 days, as determined in accordance with the HA policy.

In practice, of course, HAs will be confronted with difficult problems in determining whether a family is actually living in, has moved out, or is otherwise absent from the unit; and in determining the length or reason for family absences. Under this rule, a family is obligated to notify the HA before the family moves out. (§ 982.309(f)) However, the family may fail to give this notice. The HA may be uncertain whether the family moved out or intends to return after an absence.

The final rule specifies that the family is obligated to give the HA information on family absence from the unit, and to cooperate with the HA for this purpose. (§ 982.312(d)(1); § 982.551(i)) The HA may adopt appropriate techniques to verify family occupancy or absence, including letters to the unit, phone calls, visits, or questions to the landlord or neighbors. (§ 982.312(d)(2))

K. Family Break-up

The proposed and final rule provide that the HA administrative plan must describe the HA's discretionary policies on how to determine who remains in the program if an assisted family breaks up. (final rule § 982.315) Resolution of these issues is left to HA discretion in accordance with the HA policy. Comments generally agree that HUD should leave resolution of such issues to the HA, and that the rule should confirm that the HA's decision is final, and not subject to appeal. Some comments request more guidance on how the HA should exercise its discretion.

Other comments assert that HUD should establish a national policy on who keeps the Section 8 subsidy after a family break-up. These comments object to granting discretion for local HAs to decide these issues, and object to the lack of regulatory guidance for exercise of this discretion. These comments state that the absence of guidance may lead to arbitrary and inequitable results, or violations of the Fair Housing laws.

Comments suggest various factors or interests that could be considered in deciding who receives assistance after a breakup:

—Whether assistance should stay with the family members who remain in the unit (during or after the initial lease term).
—The interest of children.
—Spousal abuse.
—Medical condition.
—Special needs of a disabled family member for accessibility features.

The final rule confirms that the HA has authority to determine which family members continue to receive assistance after a family breaks up. The HA policy must describe how the HA determines what family members will remain in the program if the family breaks up. (§ 982.315(a): § 982.54(d)(11)) The final rule makes clear that the HA has broad discretion to decide these issues. The rule does not require the HA to use any particular procedure for making such decisions, and does not require the HA to consider any particular factors. The rule confirms, as suggested by public comments, that the factors to be considered by the HA in making this decision may include:

—Whether the assistance should remain with family members remaining in the original assisted unit.
—The interest of minor children or of ill, elderly or disabled family members.
—Whether family members are forced to leave the unit as a result of actual or threatened physical violence against family members by a spouse or other member of the household.
—Other factors specified by the HA. (§ 982.315(b))

The HA is not required to devise a complete set of rules for disposing of the issues posed because of family break-up. The HA is free to leave room for case by case decision, based on the circumstances of individual cases. The HA is merely required to adopt a procedure for handling these issues, and to state the procedure in the administrative plan. Under this rule, the HA is not required to routinely submit the administrative plan, including the HA family break-up policy, for HUD review or approval.

The final rule provides that when a court determines the disposition of property between members of the assisted family in a divorce or separation under a settlement or judicial decree, the HA is bound by the court's determination of which family members continue to receive assistance in the program. (§ 982.315(c))

V. Where Family Can Live and Move

A. Eligible Housing

The rule provides that Section 8 tenant-based subsidy may not be used for certain types of housing, and may not be combined with certain other types of housing subsidy. (§ 982.352) The final rule revises several provisions on this subject.

1. HUD-Owned Unit

When the proposed rule was published, the law provided that a Section 8 ''owner'' must be either a ''private'' person or entity, or a public housing agency. (42 U.S.C. 1437f(f)(1)) HUD is neither a private entity nor a public housing agency. For this reason, the proposed rule would have prohibited assistance for a unit that is owned by HUD. However, the law was amended in 1994 to provide that an owner may be ''an agency of the Federal Government''. (Pub. L. 103–233, April 11, 1994, section 101(d), 108 Stat. 357, amending the Section 8 ''owner'' definition) This amendment was intended to permit HUD to receive Section 8 housing assistance payments as a Section 8 owner when HUD takes title to units covered by a Section 8 HAP

contract. Because of the statutory change, the final rule deletes the prohibition against use of HUD-owned units.

2. Prohibition of Other Subsidy

The rule prohibits assistance for a unit that benefits from ''duplicative'' housing subsidy from a federal, State or local source. (§ 982.352(c)(9)) The proposed rule would have added a new provision that also prohibits assistance for a unit receiving, or which received in the past 5 years, a local or State mortgage interest subsidy, construction or rehabilitation subsidy or project-based rent-subsidy.

Public comments object to the proposed prohibition of assistance for projects that benefit from a State or local interest subsidy, or construction or rehabilitation subsidy. Comments point out that this restriction would preclude use of housing developed with the benefit of State or local subsidy, including housing for the disabled. Comments note that the development and rehabilitation subsidies play a different role from the Section 8 rental subsidy. Development subsidy increases the supply of affordable housing. Although development subsidy reduces debt service requirements, operators need rent to cover maintenance and operating expenses. Rental subsidy helps families afford the rent.

After consideration of public comment, HUD has eliminated the blanket prohibition of Section 8 assistance for housing that has benefitted from a State or local subsidy for construction or rehabilitation, or a mortgage interest subsidy. HUD agrees that subsidies to increase the supply of affordable housing perform a different role from Section 8 subsidies for rental of available housing. Section 8 families should not be barred from renting such housing.

The proposed rule would have prohibited use of units that received subsidy in the past 5 years. The final rule does not include any limitation on use of units that received any form of State or local subsidy before receiving the Section 8 assistance. The final rule prohibits a family from receiving tenant-based assistance for housing currently assisted by a State or local ''rent subsidy''. (§ 982.352(c)(8)) This prohibition applies whether the rent subsidy is project-based or tenant-based.

In addition to the list of specific types of housing subsidies that may not be combined with the Section 8 tenant-based subsidy, the final rule continues to prohibit Section 8 assistance for a unit that is assisted by ''any other'' duplicative governmental subsidy, from a federal, State, or local government. (§ 982.352(c)(9)) This prohibition is intended to promote maximum coverage from available public subsidy resources, to avoid waste of scarce Section 8 subsidy, and to avoid windfall payments to a subsidized family or owner.

The rule provides that HUD has authority to determine whether a particular housing subsidy source is ''duplicative''. However, the rule specifies that for this purpose housing subsidy does not include the housing component of a welfare payment, a social security payment received by the family, or a rent reduction because of a tax credit.

In the voucher program, a family may choose to lease a unit for a rent exceeding the HA payment standard, and the excess rent is not covered by an increase in the Section 8 housing assistance payment. The family must therefore find funds to pay this additional amount. A comment recommends that the rule should allow a State or local subsidy that covers excess rent payment by the family, and thus hold the family share below 30 percent of adjusted income. This comment is not adopted. The final rule prohibits any other State or local rent subsidy for a family assisted with Section 8 tenant-based assistance.

3. HA-Owned Housing

A family may lease housing that is owned by the HA responsible for administration of the program. (§ 982.352(b)) By law, an HA may be a Section 8 owner, and the HA as contract administrator may enter into a contract with itself as the Section 8 owner. (42 U.S.C. 1437f(a)) Because of the inherent conflict in the HA's roles as contract administrator and unit owner, the proposed rule provided that HUD must have approved the unit rent before execution of the HAP contract.

Comments object to the requirement for HUD approval of unit rents. Comments suggest that approval is not necessary if the rent is within program guidelines. Other comments recommend that HUD should establish initial rent thresholds for the HA program. The HA should only need HUD approval if the proposed rents are above the pre-established level.

The final rule retains the requirement for HUD approval of the rents for HA-owned tenant-based units. (§ 982.352(b)(iv) and (v)) When a family wants to rent a unit owned by the HA that runs the program, the HA must inform the family (orally and in writing) that the family may select any eligible dwelling. The unit must be freely selected by the family, without HA pressure or steering. (§ 982.352(b)(i))

4. Overlapping Assistance

A participant family may move to a new unit with continued tenant-based assistance. Comments ask whether the assisted lease for a new unit can commence before the termination of assistance on the prior unit, or whether any overlap of assistance is a prohibited double subsidy.

A new provision is added to make clear that the term of the assisted lease for a new assisted unit may begin during the month the family moves out of the first assisted unit. Overlap of the housing assistance payment for the month when the family moves out and the first assistance payment for the new unit is not considered to constitute a duplicative housing subsidy. (§ 982.311(d)(2))

B. Portability

1. Area Where Family Can Rent

In the proposed rule, the ''leasing area'' was defined as the area where a family can lease a unit with tenant-based assistance inside or outside the HA jurisdiction. In the proposed rule, the ''extended operation area'' was defined as ''an area which is outside the HA jurisdiction (as determined by State or local law), but is inside the same State, the same MSA, or an MSA that is next to the same MSA''. The final rule does not include either of these terms and definitions.

The statute requires portability within the same State, same MSA and a contiguous MSA as the HA. (42 U.S.C. 1437f(r)(1)) Many comments object to expanding portability beyond the same State as the initial HA. Others recommend national portability, but state that the Department should allow HAs to limit the number of families moving under portability, or require the families to show ''good cause''. The final rule provides that a family may move under portability anywhere in the United States in the jurisdiction of an HA administering a Section 8 voucher or certificate program. (§ 982.353(b)(4))

2. Portability in First Year After Admission

The final rule revises provisions on portability during the first year after a family's admission to the program. By law, portability applies during this period if the family is ''living within'' the HA jurisdiction ''at the time that such family applies'' for assistance from the HA. (42 U.S.C. 1437f(r)(1))

The final rule provides that the family may lease a unit under portability

during the first year after admission if either the household head or spouse of an assisted family already had a ''domicile'' (legal residence) in the jurisdiction of the initial HA at the time when the family first submitted an application for participation in the program to the initial HA. (§ 982.353(c)(1)) Generally, transient occupancy does not constitute legal residence in a jurisdiction under State and local law. The individual must intend to establish a home in the jurisdiction.

If this test is not met, the family does not have any right to portability during the first year of assisted occupancy. The proposed rule would have provided that in this situation, the family ''may only lease a unit in the (initial) HA jurisdiction''. The final rule specifies that while the family does not have a right to portability, the family may lease a unit outside the HA jurisdiction if the initial and receiving HA voluntarily agree to allow a portability move by the family to the jurisdiction of the receiving HA. (§ 982.353(c)(3))

3. Portability—Family Eligibility

The proposed rule would have provided that since a portable family had already been determined eligible by the initial HA, the receiving HA was not required to redetermine family eligibility for participation in the program. The final rule provides that the initial HA is responsible for determining whether the family is income eligible in the area where the family wants to lease a unit. (§ 982.355(c)(1)) However, the receiving HA may opt to conduct a reexamination of income in order to coordinate the anniversary of the HAP contract with the reexamination date, or for other reasons. If the receiving HA opts to conduct a new reexamination, the receiving HA may not delay issuing the family a voucher or certificate or otherwise delay approval of a unit unless the recertification is necessary to determine income eligibility. (§ 982.355(c)(4))

Further, the final rule reiterates the general program admission requirements (§ 982.201(b)(2)) as applied to portability:

—If the family is not a current participant in the initial HA certificate or voucher program, the applicable income limit for admission to the receiving HA certificate program or voucher program is the receiving HA income limit for the area where the family will be initially assisted in the program. The family may only use the certificate or voucher to lease a unit in an area where the family is income-eligible at admission to the receiving HA program. (§ 982.353(d)(1))

—If a participant in the initial HA certificate or voucher program is moving between these programs (the family is either moving from the initial HA certificate program to the receiving HA voucher program, or from the initial HA voucher program to the receiving HA certificate program), the family must meet the eligibility criteria for the program to which the family is being admitted. Since a family moving between the voucher and certificate programs is continuously assisted, the applicable income limit is the receiving HA low-income limit (80 percent of median income) for the area to which the family will move. (§ 982.353(d)(2) and (3); see § 982.201(b)(1))

—For continued assistance in the same program, income eligibility is not redetermined. (§ 982.353(d)(3))

4. Portability—Funding

The proposed rule would have provided that if funding was available, a receiving HA would be required to absorb the incoming family with funding under its own consolidated ACC. The proposed rule would have also required that HUD offer funding to the receiving HA to cover the net annual increase in the HA tenant-based program because of portability. These provisions are not mandated in the final rule.

While the Department received positive comments concerning the mandatory absorption requirement, other comments assert that this approach is flawed. The major concern was the impact the required absorption of portable families would have on the receiving HA's waiting list. By requiring HAs to absorb portable families with any assistance available through new funding or turnover, the wait for applicants at the receiving HA could be significantly lengthened. Comments express skepticism that appropriated funds will fully fund the net annual increase in the number of families absorbed into the receiving HA program. Comments recommend that HUD require HAs to absorb a certain number of families based on the amount of new funding or historical turnover rates, and that HUD reimburse HAs for absorbing families exceeding those thresholds.

Instead of prescribing a portability funding method that relies on allocating appropriated funds that may be insufficient to reimburse receiving HAs for portability moves at the desired level, and instead of prescribing detailed procedures that may not work well in all situations, the final rule allows HUD to exercise any of the following options for portability reimbursements:

—HUD may transfer funds for assistance to portable families to the receiving HA from funds available under the initial HA ACC.

—HUD may provide additional funding (e.g., funds for new units) to the initial HA to compensate for funds transferred for portability purposes.

—HUD may provide additional funding (e.g., funds for new units) to the receiving HA to reimburse the HA for absorption of portable families.

—HUD may require the receiving HA to absorb portable families. (§ 982.355(f))

It is anticipated that HUD will test all of the portability funding options authorized by the regulations. In fact, the Notice of Funding Availability published in the **Federal Register** on March 3, 1995 provides for use of up to 50 percent of the fair share allocation of certificate and voucher funding for each allocation area to be allocated as reimbursement to receiving HAs for the costs to assist families that have moved under the portability procedures.

5. Portability—Billing and Administrative Procedures

The vast majority of comments agreed that most problems in administering assistance for portable families are caused by the billing process and differing HA portability procedures and information requirements. In response to this concern, the final rule details the portability procedures (§ 982.355(c)).

The final rule specifies that the initial HA must reimburse the receiving HA ''promptly'', both for housing assistance payments and administrative fees for a portability family. (§ 982.355(e)(2) and (3)) HUD may reduce the initial HA's administrative fee for late reimbursement to the receiving HA. (§ 982.355(e)(4))

The initial and receiving HA must follow financial procedures required by HUD. The receiving HA must use a HUD-prescribed portability billing form to bill the initial HA for housing assistance payments and administrative fees. (§ 982.355(e)(5)) The initial and receiving HA must comply with billing and payment deadlines under the financial procedures.

VI. Dwelling Unit: Housing Quality Standards, Subsidy Standards, Inspection and Maintenance

A. Housing Quality Standards (HQS): General

The rule provides that the housing quality standards or ''HQS'' are the HUD

minimum quality standards for housing assisted under the tenant-based programs. Program housing must comply with HQS, both at initial occupancy and during the term of the assisted lease. (§ 982.401(a)(1)) The HA inspects the unit before approving the tenancy (§ 982.305(a) and (b)), and must reinspect the unit at least once every year. (§ 982.405(a))

Comments note that HUD did not provide the HA with any latitude to pass units with minor HQS violations. Comments recommend that HUD allow HAs to pass units on a conditional basis to enable immediate leasing for at-risk families in desperate need of housing. An HA would require the owner of a unit with a conditional HQS approval to fully comply with HQS within a specified period of time.

HUD has not adopted the recommendation to permit conditional approvals of units that fail HQS. Conditional HQS approvals were allowed for the Section 8 certificate program in the 1970's, but were discontinued because of major enforcement problems. When conditional approvals were allowed, many owners did not make promised repairs, or HAs did not reinspect the conditionally approved units. The goal of the Section 8 tenant-based programs is to assist eligible families to pay rent for decent, safe, and sanitary housing. (See 42 U.S.C. 1437, 1437f(a) and 1437f(o)(5)) Assistance for units that do not meet the HQS defeats this goal, and provides no incentive for owners to maintain quality housing stock for rental by low-income families.

Comments suggest that HUD needs to review the whole question of appropriate HQS standards. Comments state that HQS standards are totally inadequate, and that some are too loose and others are ridiculously tight. Other comment suggests that a Task Force should be assembled to reexamine the HQS.

Program experience demonstrates that the HQS, when correctly applied and administered, are an excellent standard for ensuring minimum livability and safety. Alleged problems of the HQS standards often result from inaccurate interpretations of the standards. For example, comments on HQS often claim that requirements concerning gutters, screens and storm doors are not essential, and should not be covered by the HQS. In fact, these three items are not HQS requirements. HUD will continue its efforts to explain the HQS criteria and highlight common misunderstandings of HQS requirements.

Comments indicate that some HAs have been charging families for repeat inspections, and object to this practice. HUD agrees that charging a family for inspection of the unit is inappropriate. The HA earns an administrative fee that covers the administration of the tenant-based programs, including HQS inspections. In response to the comment, the rule is amended to confirm that HA may not charge the family or the owner for an initial inspection or a reinspection of the unit. (§ 982.405(e))

B. Housing Quality Standards (HQS): Acceptability Criteria

Comments recommend using local codes instead of the regulatory HQS, or recommend adding local code requirements to the regulatory HQS. The final rule states, as proposed, that HUD may permit an HA to use acceptability criteria variations that are based on local codes or national standards, or may permit variations because of local climatic or geographic conditions. (§ 982.401(a)(4)(iv))

The final rule also provides that HUD will not approve HQS variations that unduly limit the amount and types of rental housing stock available at or below the FMR that would otherwise meet the HQS of the program (e.g., specific square footage requirements for kitchen counter space). (§ 982.401(a)(4)(iv))

C. Housing Quality Standards (HQS): Specific Disposal

1. Food Preparation and Refuse Disposal

Comment requests that the acceptability criteria allow microwave ovens, because some participants are willing to live in units that provide them with microwave ovens instead of an oven and/or stove with top burners. The HQS has been modified to allow microwave ovens as follows:

—*If the oven and stove are tenant-supplied:* A microwave oven may be substituted for an oven and/or stove with top burners.

—*If the oven and stove are owner-supplied:* A microwave oven may be substituted for an oven and/or stove with top burners if the tenant agrees and the owner treats all tenants alike (e.g., microwaves are provided for both non-subsidized and subsidized tenants). (§ 982.401(c)(2))

12. Space and Security

Space—Bedroom or Living/Sleeping Room

The proposed rule would have deleted the term ''living/sleeping'' room and substituted the term ''living/bedroom''. Comments ask for clarification on whether or not the use of a different term meant that HUD was revising current policy permitting other rooms not classified as bedrooms (e.g., a den, living room or dining room with windows) to be counted as a ''sleeping room''. HUD did not intend to change the policy, which permits families to use a room with a window and two electrical outlets as a living/sleeping room, to meet the HQS space requirement of one bedroom or living/sleeping room for each two persons. Editorial changes have been made throughout the rule to restore the term ''living/sleeping''.

Comments object to the requirement that persons of opposite sex, other than husband and wife or very young children, may not be required to occupy the same bedroom or living/sleeping room. An HA comment indicates that the agency requires unmarried ''live-ins'' who are ''significant others'' to share a bedroom. Comments suggest that HUD state the requirement as two persons per bedroom with the proviso that the head of household not be required to share a bedroom with a child, and let the family make its own sleeping arrangements.

The comments indicate confusion about the relationship between the HQS space requirements and the HA's occupancy requirements (now called ''subsidy standards''). The HQS space requirements set a standard for the maximum number of people that can occupy the unit. The HQS space standard does not dictate who sleeps in each bedroom or living/sleeping room. Further, the HQS space requirements allow space other than bedrooms to be considered ''living/sleeping rooms'' to ensure maximum flexibility in determining whether a unit is overcrowded. In contrast, the subsidy standards set by the HA determine subsidy levels, and are generally based on the ages and sex of the family members, and on other factors considered under the HA policy. (See § 982.402)

Window

Comment asks if a combination storm/screen window is lockable, can it be assumed that the inside window does not have to be lockable. The commenter is correct. The rule provides any dwelling unit windows that are accessible from the outside must be lockable. (§ 982.401(d)(2)(iii))

The proposed rule would have provided that windows that are nailed shut are acceptable if the windows are not needed as an alternate exit in case of fire. Comment suggests that the

regulations should be revised to read as follows, ''Windows which are nailed shut are acceptable only if these windows are not needed for ventilation or as an alternate exit in case of fire''. HUD has adopted this suggestion. (§ 982.401(d)(2)(iii))

3. Thermal Environment

Several comments suggest that HAs should be permitted to approve Oxygen Depletion System (ODS) heaters in all rooms not used for sleeping if permitted by local code. The Department has not adopted this suggestion. ODS heaters are unvented space heaters. The HA must request HUD approval of a variation in the acceptability criteria. (See § 982.401(e)(2)(ii))

4. Structure and Materials

Comment suggests that ceilings, walls and floors requirements be changed from ''not have any serious defects such as severe bulging or leaning, holes, loose surface materials, severe buckling, missing parts, or other serious damage'' to ''must be in good repair''. The Department has not adopted this language.

The language in the rule is more specific and less open to subjective interpretations. The Department is, however, retaining the word ''large'' to describe holes that will cause a unit to fail the HQS standard. (§ 982.401(g)(2)(i))

5. Lead-Based Paint

This final rule adopts much of the lead-based paint language in the proposed rule. However the final rule also:

—Adds language from a proposed rule published on May 12, 1994 at 59 FR 24850 concerning evaluation and treatment of lead-based paint.
—Makes changes to conform to new recommendations of the Department of Health and Human Services, Centers for Disease Control (CDC).
—Responds to a May 1994 GAO briefing report to congressional committees entitled ''Lead-Based Paint Poisoning—Children in Section 8 Tenant-Based Housing Are Not Adequately Protected''.

Comments note that the proposed rule did not delete the requirement for repainting an area that has been treated for lead paint, and that the requirement is no longer applicable under 24 CFR 35.24(b)(2)(ii). The Department inadvertently neglected to remove this requirement from the HQS in the proposed rule. Because the repainting requirement was eliminated in 1987, the final rule does not include the repainting requirement.

The final rule changes the definition of an elevated blood-lead level (EBL) to conform to recommendations of the Department of Health and Human Services, Centers for Disease Control (CDC), with respect to blood lead levels that require environmental intervention. This new definition of EBL was also proposed in the May 12, 1994 proposed rule. The new standard for environmental intervention would be equal to or exceeding 20 ug/dl for a single test or 15–19 ug/dl in two consecutive tests several months apart. Many people are under the impression that the CDC, in its October 1991 Statement, ''Preventing Lead Poisoning in Young Children'', effectively lowered the definition of an EBL to 10 ug/dl. (See, U.S. Department of Health and Human Services, Public Health Service, Centers for Disease Control, Preventing Lead Poisoning in Young Children, A Statement by the Centers for Disease Control, October 1991, page 2) It is true that the Statement indicates that the overall goal is to reduce children's blood lead levels below 10 ug/dl. However, the Statement does not recommend medical or environmental intervention at levels of 10–14 ug/dl. Pursuant to CDC advice in the October 1991 Statement, the Department is also changing the childhood age of concern from less than 7 years of age to less than 6 years. (§ 982.401(j))

The final rule changes proposed requirements for the evaluation and treatment of lead-based paint in the May 12, 1994 proposed rule. The final rule describes requirements for testing to determine whether paint surfaces contain lead-based paint, and for treatment of defective surfaces.

A defective paint surface must be treated if the total area of defective paint on a ''component'' is:

—More than 10 square feet on an exterior wall;
—More than 2 square feet on an interior or exterior component with a large surface area (other than exterior walls). Such components include ceilings, floors, doors, and interior walls.
—More than 10 percent of the total surface area on an interior or exterior component with a small surface area. Such components include window sills, baseboards and trim. (§ 982.401(j)(6)(i))

For this purpose, component is defined as:

''an element of a residential structure identified by type and location, such as a bedroom wall, an exterior window sill, a baseboard in a living room, a kitchen floor, an interior window sill in a bathroom, a porch floor, stair treads in a common stairwell, or an exterior wall.''

(§ 982.401(j)(2))

The requirement to test chewable surfaces for lead-based paint is amended to allow laboratory analysis of paint samples. Accordingly, the definition of lead-based paint is amended to add 0.5 percent by weight or 5000 parts per million (PPM). The final rule includes acceptable treatment methods, prohibited practices, cleanup and tenant protection provisions.

The final rule also requires that the owner inform the family and the HA if the owner has any knowledge of the presence of lead-based paint. In addition, the rule adds a requirement for the HA to match the names and addresses of Section 8 participants with the names and addresses of children that local health officials have determined have an EBL. These changes were made in response to a May 1994 GAO briefing report to congressional committees. (The report is entitled ''Lead-Based Paint Poisoning—Children in Section 8 Tenant-Based Housing Are Not Adequately Protected''.)

Analysis of the need for additional changes to the lead-based paint housing quality standard requirements is being deferred to publication of the proposed rule to implement sections 1012 and 1013 of the Residential Lead-Based Paint Hazard Reduction Act of 1992 and to revise the lead-based paint requirements for all HUD programs.

6. Access

Comment recommends that HQS access requirements should require accessible features for persons with disabilities. The Department has not adopted this suggestion. The accessibility requirements for federally assisted housing are governed by the regulations implementing Section 504 of the Rehabilitation Act of 1973. The rule requires compliance with disabled accessibility requirements under these regulations, and with other equal opportunity requirements. (§ 982.53(a))

7. Site and Neighborhood

Comments object to the inclusion of ''very high crime rate'' as an example of a neighborhood condition that would cause a unit to fail inspection. Comments indicate that such a determination would be a subjective conclusion by inspectors, and may limit in certain areas the number of units available to program participants. Other comment requests that ''danger of fire'' be deleted or clarified.

HUD has deleted ''very high crime rate'' as an example under the acceptability criteria. Further, ''danger

of fire'' has been replaced with ''fire hazards'', the original wording from the current rules and program handbook. (§ 982.401(l))

8. Smoke Detectors

The final rule implements the new statutory requirements concerning fire protection and safety under the Fire Administration Authorization Act of 1992. (Section 106 of Pub. L. 102–522, adding a new section 31 to the Federal Fire Prevention and Control Act of 1974) The new law prohibits the use of housing assistance for certain assisted and insured properties, unless various fire protection and safety standards are met.

A comment objects to the provision requiring smoke detectors specifically designed for hearing-impaired persons, because the proposed rule did not define ''hearing-impaired person'' and ''hearing-impaired smoke detector''. HUD notes that the requirement for smoke detectors with an alarm system for hearing-impaired persons is not new, and has been required by HUD since August 1992. Smoke detectors for the hearing-impaired must comply with the detailed technical specifications in National Fire Protection Association Standard (NFPA) 74 (or its successor standards). For assistance in determining specific requirements mandated by NFPA 74, HAs should contact State or local fire safety officials with jurisdiction over the proposed property and with expertise concerning such requirements.

HUD also declines to define hearing-impaired person in the rule. Residents who need visual alarms because of hearing impairment should advise owners and HAs of this need. The family may request any special equipment from the owner, since the family is the best judge of the individual needs of family members. (§ 982.401(n))

VII. Housing Assistance Payments Contract and Owner Responsibility

A. Family Contribution

Comments recommend that the rule should specify that the family is not responsible for payment of the portion of the rent to owner covered by the housing assistance payment under the HAP contract when the HA stops making payment to the owner. This recommendation is adopted.

The final rule makes clear that the family is not responsible for payment of the portion of the rent to owner covered by the housing assistance payment. The HA failure to pay the housing assistance payment to the owner is not a violation of the lease between the tenant and the owner. The owner may not terminate the tenancy of the family for nonpayment of this amount. (§ 982.451(c)(4)(iii); § 982.310(b)) (The same provision is stated at two points.)

B. Fraud and Other Program Violation

The proposed rule would have provided that an owner breached the HAP contract if the owner committed fraud or made any false statement in connection with any federal housing assistance program or with a federally insured mortgage or HUD loan. The final rule provides that owner breach includes fraud, bribery or any other corrupt or criminal act in connection with any federal housing program. (§ 982.453(a)(4))

The proposed and final rule provide that violation of ''any other'' Section 8 assistance contract is a breach of the particular tenant-based HAP contract. (§ 982.453(a)(2)) The HA may terminate a tenant-based HAP contract because the owner has breached a tenant-based or project-based Section 8 HAP contract (between the owner and the same or another HA, or between the owner and HUD).

Comments assert that it is unfair to terminate a tenant-based HAP contract with an owner because the owner has breached another Section 8 assistance contract, and recommend that this provision be deleted. This recommendation is not adopted. The provision strengthens the HA's authority and leverage to induce owners to comply with Section 8 program requirements. The regulatory list of provisions which constitute a breach of the HAP contract is substantially based on language of the assistance contract forms currently used in the voucher and certificate programs. (§ 982.453)

C. HA Remedies for Owner Breach

The proposed rule provided that HA remedies for owner breach of the HAP contract included reduction of housing assistance payments. Comments recommend adding a provision confirming that payments may be ''abated''. The final rule provides that HA remedies include an ''abatement or other reduction'' of housing assistance payments. (§ 982.453(b))

D. Automatic HAP Contract Termination: No HA Payment for 6 Months

The proposed rule provided that the HAP contract terminated automatically three months after the last housing assistance payment. Comments object to this provision. Comments indicate that the time frame was too short, considering fluctuations in the job market. Comments recommend a six month time frame. The final rule provides that the HAP contract terminates automatically six months (180 calendar days) after the last housing assistance payment to the owner. (§ 982.455(a)).

E. Late Payment by HA to Owner: Late Fee

Each month, the HA pays the housing assistance payment to the owner to subsidize occupancy by the family under the lease. The rule specifies that the HA is obligated to pay the owner promptly when payment is due to the owner in accordance with the HAP contract. (§ 982.451(c)(5))

Sometimes an HA may fail to pay the owner on time. In response to public questions, the final rule clarifies that the HA may be obligated to pay a late payment fee in accordance with State or local law. However, unless authorized by HUD, the HA may not use program receipts other than the following for payment of any such late payment fee:

(1) The HA administrative fee or

(2) The administrative fee reserve.

The federal rule does not itself grant an owner *any right* to a late fee for HA delay in payment to the owner. The rule is only intended to make clear that the federal regulatory scheme does not override State or local law that may give the owner a right to recover late fees from the HA for delinquent payments under the HAP contract.

F. 90 day Owner Termination Notice

By law, an owner must give notice to the family and HUD, 90 days before a ''termination'' of the HAP contract. (42 U.S.C. 1437f(c)(9)) For purpose of the termination notice requirement, ''termination'' means either:

—The owner's ''refusal to renew'', called an ''*opt-out*'', or

—The ''*expiration*'' of the HAP contract.

In the tenant-based programs, ''opt-out'' refers to an owner's decision to terminate tenancy of an assisted family after the initial year for a business or economic reason (such as desire to rent the unit for a higher rental, or to convert the property to another use). (§ 982.455(b)(2)(ii))

In the tenant-based programs, the HAP contract and the assisted lease do not have a pre-defined end of term. The term of the HAP contract is the same as the term of the lease. The contract and lease generally extend indefinitely until terminated by the owner for lease violation or other good cause. In this context, the rule provides that ''expiration'' means the occurrence of either of the following events:

—Automatic termination of the HAP contract when six months (180 calendar days) have passed since the last housing assistance payment.
—An HA determination (in accordance with HUD requirements) that the HAP contract must be terminated because there is insufficient funding under the consolidated ACC to support continued assistance for families in the program. (§ 982.455(b)(2)(iii))

Comments recommend that the rule specify that an owner may not terminate any HAP contract, or evict a tenant, if HUD determines the termination is not lawful. The law provides that HUD must review the reasons for terminations as stated in the owner's termination notice. Upon such review, HUD must:

''issue a written finding of the legality of the termination and the reasons for the termination, including the actions considered or taken to avoid the termination''.

The rule requires that on receiving the owner termination notice (in case of an ''expiration'' or ''opt-out'') the HUD field office must review the notice and consider whether there are additional actions which should be taken to avoid the termination. (§ 982.455(b)(4)) After HUD review of the owner notice, the HUD field office will issue a written finding, as provided by law, on the legality of the HAP contract termination, and the reasons for termination as stated in the owner's notice, including any actions taken to avoid the termination. (§ 982.455(b)(4)(iii)) Within 30 calendar days of HUD's finding, the owner must provide written notice of HUD's decision to the tenant.

The law does not require HUD approval of the termination. The final rule adds a new provision clarifying that the owner may proceed with eviction whether HUD approves or disapproves, or fails to complete the required review of the owner notice before expiration of the 90 day review period. (§ 982.455(b)(4)(iv))

VIII. Family Obligations

A. Statement of Family Obligations

The rule lists the grounds for which the HA is authorized to deny assistance to an applicant or terminate assistance to a participant because of the family's action or failure to act. (§ 982.552(b))

The HA may deny or terminate assistance for violation of family obligations. (§ 982.552(b)(1)) The final rule modifies the statement of family obligations under the program. (§ 982.551)

Some comments support HUD's proposed statement of family obligations, and other provisions on denial or termination of assistance. Comments agree that the HA should have the power to terminate assistance for violation of the family's program obligations. Other comments recommend some changes in these provisions.

Comments note that family violation of program obligations may be unintentional, minor or beyond the family's control. The comments state that the HA should only be authorized to terminate assistance because of serious or repeated violation of the family's program obligations. This recommendation is not adopted. All family obligations are important. The family is responsible for compliance with all family obligations, and the HA may terminate assistance for any violation. To terminate assistance, the HA must show that the family has committed the violation charged. In general, the HA should not be required to show also that the violation of family obligations is ''serious or repeated''. To add this requirement would complicate and discourage the enforcement of program requirements. (However, an HA may only terminate assistance for a ''serious or repeated'' violation of the assisted lease. In this case, the regulatory standard for HA termination of assistance parallels the statutory authorization for eviction by the owner for ''serious or repeated'' violation of the lease.)

If the family has violated a program obligation, the HA has discretion to terminate assistance based on the facts of the particular case. (§ 982.552(c))

B. Duty To Supply Required Information

The final rule restates provisions describing the family duty to supply information requested by the HA or HUD. (§ 982.551(b)) The family must supply any information that the HA or HUD determines is necessary in the administration of the program. Information includes any certification, release or other documentation requested by the HA or HUD. (§ 982.551(b)(1)) The final rule adds a new provision explicitly confirming that any information or documentation supplied by the family must be ''true and complete''. (§ 981.551(b)(4))

C. Family Behavior and Violation of Lease

In this rulemaking, HUD has reexamined the appropriate role of program sanctions by the HA for family behavior in occupancy of an assisted unit, and for family violation of an assisted lease. Under current program rules, breach of the assisted lease with the landlord was not a violation of the family's program obligations, and was not grounds for termination of assistance by the HA. Even after eviction, a family could move to a new unit with continued assistance in the tenant-based program.

The proposed rule expanded the obligations of a participant by providing that the family was responsible for certain types of HQS violation caused by the family. In addition, HUD specifically invited comment on whether lease violation by an assisted family should be designated as a distinct regulatory ground for termination of assistance.

Comments

Some comments contend that the family's lease violation or behavior in occupancy should not be a ground for termination of assistance. According to these comments, the remedy lies with the family's landlord, who may evict the family for good cause. The HA should not displace the family if a landlord has not elected to evict, and should not usurp the decision of another landlord whether to rent to a family because of actions in a prior unit.

Comments state that Section 8 tenants should be treated like private tenants. The decision whether to accept or reject a tenant should be the landlord's private decision. The HA is not a party to the lease. HUD should not inject the HA into the relation between tenants and landlords. Comments recommend that the HA should not be permitted to condition program assistance on the family's suitability for tenancy. Comments also note that the HA is not equipped to investigate a landlord's claim of tenant misbehavior in occupancy. Comments claim that authorizing the HA to terminate assistance for breach of the lease ''forces'' the HA to assume the landlord's responsibility of enforcing the lease. This new role opens a pandora's box for the HA.

Other comments urge that the HA should be permitted to terminate assistance for family violation of an assisted lease. The family should be held responsible for conduct during assisted occupancy. The HA should not allow a move by a family that fails to pay the rent or commits other violations of the lease. Allowing the HA to terminate assistance for family lease violation encourages improvement in family behavior. If a family violates the lease, denial of continued assistance saves scarce program resources for other, more deserving, families.

By statute, a Section 8 owner may evict for serious or repeated violation of the lease, as well as for other good cause. Comments state that the HA

should not be compelled to issue a new certificate or voucher after the family is evicted. Termination of assistance because of a lease violation would be an effective tool in administration of the program. Action by the HA complements eviction by the landlord. Under the current system, families are evicted from one unit after another. Comments suggest that this practice discourages participation by landlords.

Comments state that the HA should be authorized to terminate assistance because of serious or repeated lease violation by the family, or other good cause. Termination should only be permitted because of serious lease violations, but not for other lease violations. Termination should only be permitted for causes in the family's control. Comments also state that the HA should be permitted to terminate assistance to a family for chronic disorder, or for behavior that constitutes a nuisance (and the owner should be permitted to evict for these grounds). The HA should be permitted to terminate assistance if the tenant moves during the first year in violation of the lease.

Comments state that assistance should only be terminated if a family has been evicted by a court action. The existence of good cause should be determined in court.

Final Rule

The final rule adds provisions on family program obligations concerning tenancy under an assisted lease.

The description of family obligations now states that the family may not commit any serious or repeated violation of the lease. (§ 982.551(e)) As in the past, such behavior is grounds for eviction by the owner. In addition, such behavior is now grounds for termination of assistance by the HA. For example, the HA *may* terminate assistance payments, or deny permission to move with continued assistance, if the family has committed any serious or repeated violation of the assisted lease.

The rule provides that the family must notify the HA and the owner before the family moves out. (§ 982.314(d)(2);§ 982.551(f)) The final rule would also provide that

—The family must promptly give the HA a copy of any owner eviction notice. (§ 982.551(g))

—If the family terminates the lease on notice to the owner, the family must give the HA a copy of the notice at the same time. (§ 982.314(d)(1); § 982.551(f))

D. HQS Breach Caused by Family

HUD proposed to allow termination of assistance for breaches of HQS that are caused by the family. Public comments on this proposal largely mirror the division of views on termination because of a family's lease violation or other behavior in occupancy.

Some comments object to termination of assistance because of family-caused HQS violation. The comments indicate that compliance with the tenant's obligation is a condition of occupancy under the lease. The owner has the responsibility to enforce these obligations. The rule should minimize HA interference with the relationship of the tenant and the owner.

Comments recommend that the tenant should only be responsible for HQS violations that substantially interfere with quiet enjoyment of the unit, or that make the unit unsafe and unsanitary. Family damage may be accidental or minor. Comments suggest that the HA should only be permitted to terminate assistance for HQS violation caused by reckless or malicious action by the family. The HA should not terminate assistance if HQS violation is beyond the tenant's control, or if there is other ''good cause'' for the tenant-caused HQS violation.

Comments object to terminating assistance payments to a landlord because the family's housekeeping results in HQS violation. Termination for this reason punishes the landlord for the family's behavior, and will be hard to enforce. The comments contend that an HA will be forced to go to court to defend termination of assistance in this circumstance.

Other comments welcome HUD's proposal to permit termination of program assistance for a family that violates the HQS. This change gives the HA control over program abusers, and will rid the program of chronic apartment destroyers.

Comments note that under the old rule the family has been allowed to trash a unit, and move on to the next assisted unit. This policy has created bad feelings among landlords, and makes the program harder to sell. Landlords can't understand why HAs continue subsidy for negligent tenants.

The final rule provides, as proposed, that the family is responsible for HQS violations caused by the family:

—By failing to pay for tenant-supplied utilities.

—By failing to supply appliances (that the owner is not required to supply under the lease).

—By damaging the unit (other than damage from ordinary wear and tear). (§ 982.404(b); § 982.551(c).)

The proposed rule would also have made the family responsible for vermin and rodent infestation caused by trash accumulation from poor family housekeeping. This provision is not included in the final rule.

Generally, owner leases provide that a tenant must keep the unit in a clean and safe condition, dispose of waste properly, and avoid damage to the unit. An owner may evict if family housekeeping creates a serious or repeated violation of the lease. (§ 982.310(a)) Under the new rule, the HA may terminate assistance for such violation of the lease. (§ 982.551(e).) There is no need for a separate provision on termination of assistance because of family housekeeping.

E. Use and Occupancy of Unit

The rule states family obligations concerning use and occupancy of the assisted unit:

—The family must reside in the unit. The unit must be the family's only residence.

—The HA must approve composition of the resident family.

—The family must promptly inform the HA of the birth, adoption or court-awarded custody of a child. The family must request HA approval to add any other family member as an occupant of the unit.

—The family must promptly notify the HA if any family member no longer resides in the unit.

—With HA approval, a foster child or a live-in-aide may reside in the dwelling unit. The HA may adopt policies concerning residence by a foster child or a live-in-aide, and define when HA consent may be given or denied. (§ 982.551(h))

Approval of New Family Members

The Section 8 program provides rental assistance for a dwelling unit leased to a low-income ''family''. (42 U.S.C. 1437f) The ''family'' may be a single person or a group of persons. (§ 982.201(c)(])) The HA determines if a group of persons qualifies as a ''family''. (§ 982.201(c)(3)) The HA determines composition of the assisted family at admission to the program, and must also approve later changes in family composition. (§ 982.201; § 982.551(h)(2))] Except for birth, adoption or court-awarded custody of a child, the family must get HA approval to add any new family member.

Some comments approve the proposed rules on family composition,

including the family obligation to obtain HA approval to add a new family member. Comments state that this requirement will prevent the practice of ''borrowing'' children or ''cousins'' to keep the same unit size. Comments ask HUD to make clear whether the resident must get HA approval for residence by a girlfriend or boyfriend. Comments recommend that the owner should have the right to approve new unit occupants.

Some comments suggest that HUD should limit HA authority to approve or disapprove adding new family members. The HA should be required to adopt ''reasonable policies''. Comments recommend that HUD should eliminate the requirement for HA approval of new family members. The HA should adopt a ''hands off'' policy. The only program interest is to insure that a unit meets the subsidy standards, and subsidy is adjusted to reflect additional income of new unit occupants. Families are afraid to report new family members. A hands off policy may result in more accurate reporting of new family members and family income. Comments ask if the HA may deny approval of a child not living with the family when admitted to the program, and question whether such denial may constitute familial discrimination. Comments note that HA policy may not discriminate on the basis of familial status.

The final rule retains the requirement for HA approval to add new family members. The rule provides that composition of the assisted family residing in the dwelling unit must be approved by the HA. The family must promptly inform the HA of the birth, adoption or court-awarded custody of a child. The family must request HA approval to add any other family member as an occupant of the unit. (§ 982.551(h)(2))

HUD has not adopted the recommendations to restrict HA discretion, or to eliminate HA approval of new family members. Unrestricted admission of family members distorts the system for fair and orderly allocation of Section 8 assistance through the HA waiting list. Addition of new family members may also overcrowd the unit, or result in need for a larger unit size and a larger subsidy. In addition, assistance may only be provided to a ''family'', not to any self-selected group of individuals. The HA has the authority and responsibility to determine that the group of assisted individuals, including new residents, constitutes a family (under the definition utilized by the particular HA). In exercising its discretion to admit or deny new family members, the HA is subject to equal opportunity requirements, including the prohibition of familial status discrimination.

The final rule does not add, as a family program obligation, a requirement to obtain the owner's approval for any new unit occupants. Of course, the owner has a legitimate proprietary interest in controlling occupancy of the owner's unit. The lease may, and typically will, include provisions that specify who can live in the unit, and require owner approval of additional unit occupants.

Occupancy by Live-in-Aide or Foster Child

The rule provides that a foster child or live-in-aide may only reside in the assisted unit with the consent of the HA. The HA may adopt policies defining when the HA may give or deny approval for occupancy by a foster child or live-in-aide. (§ 982.551(h)(4))

A live-in-aide resides in the unit to care for a person who is elderly, near-elderly (50 to 61) or disabled. (42 U.S.C. 1437a(b)(3)(B); ''live-in-aide'' definition at § 813.102; see § 982.201(c)(3)) The live-in-aide is not a member of the assisted family. Income of the live-in-aide is not included in family income (used to calculate family eligibility and contribution to rent).

Comments object to granting the HA ''veto-power'' over occupancy by a foster child or live-in-aide, and recommend that the requirement for HA approval should be eliminated. The HA is not qualified to determine whether the family can live independently without assistance of a live-in-aide. Comments claim that HAs do not have requisite procedural safeguards for such decisions. Denying approval for a live-in-aide could subject the HA to liability under the Fair Housing Act.

Other comments state that the rule should allow the HA to specify whether live-in-aides may reside in the unit, how many, and in what circumstances.

The final rule retains the requirement, as proposed, that the family must obtain HA approval for occupancy by a live-in-aide or foster child. In both cases there are important program interests in retaining the HA authority over such occupancy. In both cases, however, the HA must exercise its discretion in accordance with the Fair Housing Act. The HA must not discriminate on the basis of disability or familial status.

Reduction in Size of Family

The final rule adds a new provision stating that the family must promptly notify the HA if any family member no longer resides in the dwelling unit. (§ 982.551(h)(3))

F. Business in Unit

The rule provides that members of the family may engage in legal ''profitmaking'' activities in the assisted unit. Any use of the unit for business activities by family members must be incidental to primary use of the unit for residence by members of the family, and must be in accordance with local law. (§ 982.551(h)(5)) These provisions are intended to encourage work and earning by assisted families.

Most comments agree that the rule should allow legal profitmaking activity by the assisted family. Other comments suggest that the authorization for legal profitmaking activity may encourage illegal activities.

Comments argue that business activity should only be allowed with approval of the owner, and in accordance with the lease. Comments point out that an owner has a legitimate interest in controlling business activities in the owner's unit (for example a laundry business where owner supplies water; or engine repairs in the living room).

HUD agrees that the landlord's interest is affected by the tenant's conduct of business activity in the apartment. Tenant business could damage the unit or disturb other residents. However, an owner may exert control over occupant activities in the same fashion as for any tenancy—by including lease provisions on business use of the unit, and by enforcing such lease provisions. The lease (or owner's house rules under the lease) may require the tenant to get the owner's permission for any business use of the property, and may otherwise regulate use of the unit for business purposes. Provisions concerning business use of a unit are commonly included in boilerplate of residential leases, and are not inconsistent with HUD regulatory requirements or HUD-required lease addendum governing the assisted tenancy.

HUD has not added provisions requiring a tenant to secure landlord consent for any business use of the unit. The rule provisions allowing business activity by the assisted resident are intended to define the family's program obligation, and therefore the grounds for termination of assistance by the HA. Conversely, the statement of family obligations is not intended or required to establish the family's obligations to the owner under the lease.

Under this rule, an HA may terminate assistance for serious or repeated violation of the assisted lease. Where the lease prohibits or regulates business activity in the unit, a serious or repeated violation of this lease requirement is a

breach of family obligation. In this circumstance, the HA may deny or terminate assistance for business activity that violates the assisted lease.

Comments recommend that the family should only be allowed to engage in business activity with approval of the HA, and that the family should be required to give the HA information concerning the nature of activities in the unit. HUD is not persuaded that HAs should be given the power to approve or disapprove business activity in the unit (so long as business activity meets the standards expressed in the rule, i.e., that the activity is legal, and is incidental to residential use of the premises). Assisted families should be treated as private market tenants, who can engage in business activities with the consent of the owner.

The HA has an interest in assuring that the unit is used as the family residence, that the business activity does not result in a violation of the HQS, and that business income is reported in calculation of the family contribution. A family is required to supply the HA with information that is necessary for administration of the program. The HA may therefore require the family to supply program-related information concerning business activity in the assisted unit.

IX. Denial or Termination of Assistance: Grounds and Procedure

A. Grounds

1. General

The rule lists the grounds on which an HA may deny or terminate assistance for a family because of the family's action or failure to act.

Comments endorse the proposed rules on denial or termination of assistance. Comments note that the rules encourage family responsibility, and allow HAs to target assistance to families who cooperate with program rules.

Comments state that the HA should be required to take all feasible steps to avoid termination of assistance and displacement of the family. The comments state that the rule should prohibit termination unless the family has been relocated.

The comments are not adopted. The decision to proceed with termination in each case must be left to the administrative judgment of the HA, in keeping with the statutory policy that HAs should be vested with the ''maximum amount of responsibility'' in the administration of their housing programs. (42 U.S.C. 1437) The procedures recommended by the comments would severely impair HA action to enforce local and national program policies. Rehousing of families is not a practical prerequisite for termination of housing assistance.

The rule defines when the HA may deny or terminate assistance because of an action or failure by a member of the family. However, the HA decides whether and how to exercise this authority and discretion in the circumstances of a particular case. The final rule specifies that the HA may consider all of the circumstances of the individual case, including seriousness of an offense, the extent of participation or culpability of individual family members, and the effects of program sanctions on family members not involved in a proscribed activity. (§ 982.552(c)(1)) Previously, the rule explicitly confirmed the HA's discretion in exercising the authority to deny or terminate assistance for criminal activity by a family member. There was no parallel provision on denial or termination for other reasons. The final rule makes clear that the HA has the same discretion in deciding whether to deny or terminate assistance for any allowable grounds, not only for criminal action by a member of the family.

The rule also confirms that the HA has the authority to devise an appropriate remedy. The HA may permit continued assistance for certain members of the family, but terminate assistance for other family members who bear a greater responsibility for violation of family obligations. (§ 982.552(c)(2))

2. Information for Family

Comments state that the HA should be required to give the family a written list of the grounds for termination, and should be prohibited from terminating unless the family has been given this information.

HUD agrees that HAs should help program families know their obligations, and the grounds for termination of assistance. This knowledge reinforces the family's sense of responsibility for its own actions. A participant family should also know that it can ask for a hearing if the HA wants to terminate assistance because of family actions.

The rule is amended to provide that the HA must give the family a written description of:

—Family obligations under the program.
—The grounds on which the HA may deny or terminate assistance because of family action or failure to act.
—HA informal hearing procedures. (§ 982.552(f))

For a new program family, information on these subjects is included in the family information packet that is given to the family at selection for the program. (§ 982.301(b)(15), (16) and (17)) The revision makes clear that this basic program information must be given to families who are already in the program, and have not received this information at selection for the program. The rule does not require two notices to any family.

HUD has not adopted the recommendation to prohibit termination unless the family has been furnished a list of the allowable grounds of termination under the program. Such a requirement might force HAs to maintain records that the information has been served on program participants, to show that this termination prerequisite has been met. If the HA needs to terminate assistance for a family, such a requirement could block termination of assistance for good and substantial grounds (for example, fraud by the family) on the grounds that the HA did not give the family general program information listing the grounds for termination of assistance. If the HA moves to terminate assistance in a particular case, the family receives specific notice of the reasons for the proposed termination and opportunity for hearing. (§ 982.555(c)(2))

3. Distinction Between Denial or Termination

Comments ask HUD to clarify the distinction between ''denial or termination'' of assistance. HUD's prior rules refer to ''denial'' of assistance both for an applicant and a participant. In general, the term ''denial'' in the old rule refers to HA withholding or refusing to take any HA action or approval leading to a commitment or commencement of assistance for the family, including refusing to issue a certificate or voucher, approve a lease or execute a HAP contract.

In the case of a participant, the old rule distinguished between:

—The grounds for which the HA could ''deny'' a new commitment of assistance to a program participant who wants to move to a new unit (by refusing to issue a new certificate or voucher, approve a new lease or execute a new HAP contract).
—The grounds for which the HA could ''terminate'' housing assistance payments under an outstanding HAP contract.

The new rule eliminates this distinction. The rule no longer distinguishes between grounds for ''denial'' or ''termination'' of assistance for a program participant. (This distinction was the source of the so-

called ''ABC'' problem under the old rule.)

The final rule states the grounds for which an HA may ''deny'' assistance for an applicant or ''terminate'' assistance for a participant. (§ 982.552(a)(2) and (3)) The rule also clarifies that

> ''Termination of assistance for a participant may include any or all of the following: refusing to enter into a HAP contract or approve a lease, terminating housing assistance payments under an outstanding HAP contract, and refusing to process or provide assistance under portability procedures.'' (§ 982.552(a)(3))

If there are grounds for termination of assistance to a participant, the HA may terminate assistance ''at any time'', and can therefore at any time exercise any of the remedies comprised in the concept of termination. (§ 982.552(b))

4. Crime by Family Member

The final rule provides that the HA may deny or terminate assistance at any time if members of the family have engaged in drug-related criminal activity or violent criminal activity. (§ 982.553(a)) ''Drug-related criminal activity'' includes both drug-trafficking and illegal use or possession of drugs. ''Violent criminal activity'' refers to criminal use of physical force against a person or property. (§ 982.4) The HA may deny or terminate assistance if the preponderance of evidence indicates that a family member has committed the crime, regardless of whether the family member has been arrested or convicted. (§ 982.553(c))

The rule provides that an HA may only deny or terminate assistance for drug use or possession by a family member if the criminal act occurred in the last year *before* the HA gave notice of proposed denial or termination of assistance for this reason. The HA may not terminate assistance for past use of drugs by a rehabilitated user who has not used drugs in the last year. Comments propose that the HA should only deny assistance for drug use or possession *after* HA notice. As HUD understands this proposal, assistance could be terminated for future drug use or possession, but could not be terminated for drug use or possession in the year preceding the HA notice. The recommendation is not adopted.

The HA may deny assistance for an addict who currently uses or possesses drugs. The proposed rule would have provided that the HA may not deny assistance for past drug use by an addict who ''has recovered'' from drug addiction. The final rule provides that the HA may not deny assistance for an addict who ''is recovering, or has recovered from'' an addiction. (§ 982.553(b)(2)) The HA may require a family member who has engaged in the illegal use of drugs to submit evidence of participation in, or successful completion of, a treatment program as a condition to being allowed to reside in the unit.

Some comments approve the provisions allowing the HA to deny or terminate assistance for criminal activity by members of the family. Other comments object to these provisions.

Comments state that HAs do not have capability to investigate criminal activity. Termination because of criminal activity by a family member harms other members of the household, and may cause homelessness. Family members may be victims of domestic violence, and may need counseling, assistance and advocacy. HUD should prohibit the HA from terminating assistance for other family members where the family is unable to control a teenage youth. Termination could force a mother to give up her children to stay in the unit.

Comments recommend that the HA should be directed to provide continuing program assistance to remaining family members. Comments claim that HUD does not have statutory authority to allow termination of assistance because of crime by family members (although the law deals with the effect of drug related criminal activity in preferences for admission, and in evictions by an owner).

The program statutes do not contain a comprehensive or exclusive statement of grounds for denial or termination of assistance. HUD has discretion to issue program regulations consistent with statutory requirements (see 42 U.S.C. 3535(d)), including regulations on denial or termination of assistance by the HA for criminal activity by members of an applicant or participant family. These rules are a reasonable exercise of HUD's rulemaking authority. The rules promote significant national and program objectives, including the critical struggle against violent or drug-related crime.

By law and this rule, Section 8 owners may terminate tenancy for certain drug-related or other criminal activity by members of the assisted household and its guests. (42 U.S.C. 1437f(d)(1)(B)(iii); § 982.310(c)) Under this rule, the statutory grounds for eviction by the owner under the lease because of criminal activity substantially overlap the regulatory grounds for termination of program assistance by the HA because of such activity.

In addition, an owner may evict for serious or repeated violation of the assisted lease. Under this rule, the HA may terminate program assistance for such violation. (§ 982.551(e); § 982.552(b)) Thus, in addition to the provisions which specifically and separately allow the HA to terminate for criminal activity (§ 982.553), the HA may terminate assistance for criminal activity that is a serious or repeated violation of the assisted lease.

The final rule provisions on criminal activity are largely the same as provisions of the prior program regulations, with a few technical revisions and editorial changes. The prior regulations concerning termination of certificate or voucher assistance because of criminal activity were published on July 11, 1990 (at 55 FR 28538). The issues considered by HUD in adoption of the prior rule are discussed at length in the Preamble to that publication. In particular, the Preamble discusses a number of the issues again raised by comments on the present rule. Points discussed in that Preamble need not be repeated here.

The rule gives the HA discretion to terminate assistance for criminal activity. However, the rule does not direct the HA to terminate assistance in any particular case. The HA has therefore the power to adopt and implement local policies, and to decide the application of local policies to particular cases.

The rule confirms that the HA has discretion to consider all the circumstances of each case. (§ 982.552(c)(1)) In exercise of its discretion, the HA may consider the character of the crime. The HA may also consider whether family members have participated in, colluded in, or benefited from criminal activity, and the impact of any termination on other family members, including children. The HA may also properly consider the broader effects of HA action or non-action on the program and community, including:

—How termination of assistance for criminal activity by assisted families may affect or discourage criminal activity in the community.

—The effect of HA termination policy on the Section 8 program, and the ability of program families to find good housing.

Comments suggest that HUD should not merely allow the HA to consider ''all'' circumstances of each case, but should require that the HA consider all the circumstances. This comment is not adopted. In this rule, HUD does not enumerate or prescribe all the factors that can or should be considered by the HA. Rather, the rule confirms that the HA has ample discretion to consider the

factors of a particular case. Given this discretion, the HA should have flexibility to make a practical determination and consideration in particular cases. The HA exercise of discretion should not be paralyzed, and opened to challenge by mandating consideration of ''all'' circumstances in ''all'' cases.

As under HUD's prior rule, this rule provides that a PHA may deny or terminate assistance for drug-related or violent criminal activity:

''if the preponderance of evidence indicates that a family member has engaged in such activity, regardless of whether the family member has been arrested or convicted''. (§ 982.553(c))

Comments endorse the use of this standard for termination or denial of program assistance. The Department has previously noted that:

''the (HA) is not being asked to adjudicate guilt, but rather whether, under a civil standard of preponderance of the evidence, a family member, in fact, is engaging in certain activities. It is the fact of the activity rather than assessment of criminal liability that is at issue.'' (55 FR 28540, third column)

The HA may deny or terminate assistance in the program because of criminal activity by any member of the ''family''. (§ 982.553(a)) By contrast, an owner may evict the assisted tenant for criminal activity by any member of the ''household'', a guest or another person under the tenant's control. (§ 982.310(c)) In addition to the family (i.e., the subject of program assistance), the ''household'' may include a live-in-aide.

Comments recommend that the rule should also allow the HA to terminate assistance because of drug-trafficking (manufacture, sale, or distribution) by a live-in-aide (who resides in the unit for care of a disabled or elderly person). This recommendation is not adopted. The HA may, however, terminate assistance to the family if drug-trafficking by the live-in-aide (a member of the ''household'') is a serious or repeated violation of the assisted lease. Moreover, the HA may withdraw or deny approval for continued residence by the live-in-aide in the assisted unit.

Under the prior and proposed rule, the HA may deny or terminate assistance if a crime by a family member is classed as a ''felony'' under federal or State law (but not for a crime classed as a misdemeanor or other non-felony category). This limitation was intended to reach types of criminal activity treated as very serious objectionable behavior, as identified by Congress or State legislators. (See discussion at 55 FR 28542) Comments suggest some uncertainty as to the meaning or applicability of this limitation.

After reconsideration, HUD has revised the rule to cover violent or drug-related crime by family members, without regard to whether a crime is technically classed as a felony. HUD believes that there may be more confusion than benefit in distinguishing between felony and misdemeanor crimes as grounds for HA denial or termination of assistance.

The felony-misdemeanor distinction creates a technical discrepancy between drug crimes that may be cause for eviction, as opposed to drug crimes that are grounds for termination of assistance. The statute provides that ''drug-related criminal activity'' is grounds for eviction of the assisted tenant by the owner (or for denial of federal preference to an applicant). In the law, this term is defined to cover ''illegal'' drug dealing or drug-use, without regard to whether the illegal activity is formally classed as a felony. (42 U.S.C. 1437f(f)(5)) Under the final rule, the HA may also terminate assistance for ''illegal'' drug-related activity. The same definition of ''drug-related criminal activity'' is now used for both purposes (eviction by an owner or termination of assistance by the HA).

5. Fraud or Other Program Violation

The proposed rule would have provided that the HA could deny or terminate assistance if the family had committed any ''fraud'' in connection with a federal housing program. The final rule provides that the HA may deny or terminate assistance at any time if any member of the family commits ''*fraud, bribery or any other corrupt or criminal act*''. (§ 982.552(b)(5)) The HA may deny or terminate assistance whether or not such criminal act occurred while the family was participating in the tenant-based program. The rule provides that such criminal act is a breach of family obligations under the program. (§ 982.551(k))

6. Debt or Reimbursement

The HA may ''at any time'' deny or terminate assistance:

—If a family currently ''owes'' money to the HA (in connection with Section 8 or public housing), or has not reimbursed amounts the HA paid a Section 8 owner for family rent or damage.

—If the family breaches an agreement to pay such amounts to the HA. (§ 982.552(b)(6) to (8))

Comments state that HUD should not allow an HA to deny assistance because of family debt to the HA. Comments claim that the rule will allow arbitrary terminations, and that the HA could terminate assistance without regard to the statute of limitations.

In HUD's view, the family is and should be held responsible for its own program debts to the HA, or for claims the HA paid to a Section 8 owner. Denying Section 8 assistance because of monies owed or Section 8 claims paid in connection with the Section 8 or public housing programs under the U.S. Housing Act of 1937 is not arbitrary, but bears a legitimate and logical connection to the HA responsibility for administration of the Section 8 program. Furthermore, the denial is based on a specific determination of law and fact. Contrary to the comment, the rule does not allow the HA to deny assistance for a debt to an HA that is barred by the statute of limitations. By definition, an amount the family ''currently owes'' is not barred by the statute of limitations.

7. Family Self-Sufficiency

The proposed rule would have provided that the HA may deny or terminate assistance if a family participating in the FSS program fails to comply with the FSS contract of participation. Comments suggest that the rule should specify that the HA may only terminate assistance if the family violates the FSS contract ''without good cause'', in accordance with the 1992 FSS law. (42 U.S.C. 1437u(c)(1), as amended by § 106(d)((2) of Pub. L. 102–550, 10/28/92 at 106 Stat. 3685) In accordance with this recommendation, the rule is amended to explicitly reflect this statutory requirement. (§ 982.552(b)(9)) With this change, the provision conforms to the existing FSS rule, which provide that the HA may terminate the FSS contract if the FSS family fails to comply ''without good cause'' with the FSS contract of participation. (§ 984.303(b)(5))

Comments claim that termination of family participation because of FSS violation may cause homelessness, and that the family may drop out of FSS because of the lack of FSS services. Families in the FSS program must comply with Section 8 and FSS obligations. However, HUD does not expect that many families will be terminated from the Section 8 program for breach of FSS obligations. However, if the HA terminates assistance for a family, another family can enter the program, and benefit from housing assistance and FSS services.

8. Abuse or Violence Against HA Personnel

The final rule provides that the HA may deny or terminate assistance if the family has engaged in or threatened abuse or violent behavior toward HA personnel. (§ 982.552(b)(10))

B. Procedures for Informal Review or Hearing

1. Applicants

In the proposed rule, HUD proposed to remove the existing regulatory distinction between ''hearing'' procedures for participants, and ''review'' procedures for applicants.

Some comments endorse this change. These comments note that the appeal process has serious consequences for the family, and assert that the greater protection of a ''hearing'' process is warranted. The change avoids confusion on the appropriate procedure for review of the HA decision.

Other comments strongly object to the proposed change extending ''hearing'' requirements to HA decisions concerning program applicants. These comments recommend that HUD should retain informal review for applicants. ''Hearings'' are unwieldy and time consuming. The change proposed by HUD would create bottlenecks and increase HA administrative costs. HAs would need additional professional, stenographic and clerical staff to conduct applicant hearings.

From the comments, it appears that some HAs voluntarily operate hearing procedures that exceed HUD requirements, and are more burdensome and expensive than needed to comply with minimum hearing requirements prescribed by HUD. The HAs appear to assume that ''hearings'' for applicants would be conducted under the more elaborate processes used for program participants, even if those processes exceed HUD requirements.

In the final rule, HUD has decided to retain the existing regulatory distinction between informal review procedures for applicants and hearing procedures for program participants. The HA must give the opportunity for informal review of a decision denying assistance to an applicant. The review procedures under the final rule are essentially unchanged from the procedures under the old rules for the tenant-based programs. The HA informal review procedures must comply with the following elements:

—The review may be conducted by any person or persons designated by the HA. However, the HA reviewer may not be a person who made or approved the decision under review or a subordinate of this person.

—The applicant may present written or oral objections.

—The HA must notify the applicant of the HA final decision after informal review. The notice must include a brief statement of the reasons for the decision. (§ 982.554(b))

On consideration of the comments, HUD finds that there is insufficient reason to change the existing procedures by extending hearing processes to applicants. The nature and justification for the existing review and hearing requirements is discussed at length in the preamble of the 1984 rule that originally promulgated these procedures. (49 FR 12215, 12224–12230)

Under the HUD rules, there is a separate procedure for review of an HA decision that a family does not qualify for a preference claimed by the family. (§ 982.210(d)(1); 59 FR 36688, July 18, 1994) Under this procedure, the applicant has the right to meet with an HA representative to review the HA determination. The meeting may be conducted by a person designated by the HA. The designated HA representative may be an officer or employee of the HA, including the person who made or reviewed the determination or a subordinate employee. The HA preference decision is not subject to the informal review process for an HA decision denying assistance to an applicant. (Now at § 982.555)

Comments recommend that the HA should be required to use the same procedure on review of denial of preference as for a denial of assistance. The comments assert that preference is the most important factor in determining whether an applicant gets subsidy, and should have the same procedural protection as other HA decisions on applicant eligibility.

In the final rule, HUD has retained the existing procedures granting a family the opportunity to meet with an HA representative to review an HA preference determination. This procedure has been used since 1988 to review denial of a federal preference. (See revision of § 882.216(k) at 53 FR 1122, 1155, column 3, January 15, 1988) In 1994, this procedure was extended to review of an HA decision denying a federal preference, ranking preference or local preference. (See § 982.210(d)(1) at 59 FR 36688)

Since the beginning, HA decisions to grant or deny preference have been subject to a separate review process, not to the informal review procedure used to review denial of assistance to the applicant. In adopting this process, the Department noted that the notice and opportunity for meeting:

''strikes an appropriate balance among the competing interests involved in the denial of a preference. On the one hand, this approach recognizes the importance of qualification for a preference in securing housing assistance at the earliest time, by establishing a mandatory mechanism for the prompt resolution of factual issues and concerns. On the other hand, use of this degree of informal procedure reflects the Department's belief that the denial of a preference—which has the effect of prolonging an applicant's wait for housing assistance—is not of such magnitude as to justify imposition of the administrative burden on (HAs) * * * that are inherent in a more formal process''. (53 FR 1122, 1140. For full discussion, see section X of preamble (''Informal Review of Federal Preference Denials'' at *Id.*).)

The rule provides that the HA administrative plan must state the HA procedures for conducting an informal review for applicants or an informal hearing for participants. (§ 982.54(d)(12) and 13; § 982.554(b); § 982.555(e)(1))

2. Participant—Informal Hearing

Hearing—When Required

The HA must offer a hearing for certain HA determinations ''relating to the individual circumstances of a participant family''. The hearing is held to consider whether HA decisions related to the family circumstances ''are in accordance with the law, HUD regulations and HA policies''. The rule lists the cases when the HA must offer a hearing, and cases when a hearing is not required.

The HA must provide the opportunity for a hearing on:

—An HA determination of the family's income.

—An HA determination of the family unit size for the family under the HA subsidy standards.

—An HA determination of the appropriate utility allowance for the family from the HA utility allowance schedule.

—An HA determination to deny or terminate assistance because of family actions.

—An HA determination to terminate assistance because the family has been absent from the unit for longer than the maximum period permitted under HA policy and HUD rules.

—In the certificate program, an HA determination that the family's unit is too big. (§ 982.555(a)(1)).

The HA is not required to grant a hearing for HA discretionary administrative determinations or for general policy issues or class grievances. (§ 982.555(b) (1) and (2)) The final rule provides that a hearing is not required

for an HA determination not to approve an extension or suspension of the certificate or voucher term. The HA has discretion whether to grant an extension or suspension. (§ 982.303 (b) and (c))

Comments object to the regulatory definition of when hearings are required, and the purpose of the HA hearing. The comment objects to the provision specifying that hearing procedures apply to HA decisions regarding individual family circumstances challenged as not in accordance with law, regulation or rules. The comment states that there should be a uniform set of procedures and appeal rules, and recommends that HUD should eliminate the distinction between types of decision for which there is or is not an appeal right.

HUD believes that the rule appropriately defines the proper role of the administrative hearing process. The terms of this definition largely follow requirements under existing program regulations concerning the purpose and subject matter of participant hearings. (See 49 FR 12215, 12226; March 29, 1984) The Department has noted that:

> ''The hearing process * * * is designed to assure that decisions by the (HA) with respect to a participant family comply with applicable rules. The hearing process does not displace the regular (HA) administrative process for matters committed to [HA] discretion and management judgment''. (49 FR 12226)

Comments state that the HA should not be required to grant a hearing for determination of the utility allowance. An HA establishes a utility allowance schedule for use in its program. To determine the assistance payment for a particular family, the HA uses the utility allowance (from the established schedule) for the dwelling unit actually leased by the family.

The rule is revised to clarify, as intended, that the HA is not required to grant a hearing on establishment of the HA schedule of utility allowances for families in the program. (§ 982.555(b)(3)) The rule provides (as proposed) that the HA must grant a hearing on the HA determination, based on the individual family circumstances, of the appropriate utility allowance for the particular family from the HA utility allowance schedule. (§ 982.555(a)(1)(ii))

The proposed rule would have carried forward a prior rule provision that required the HA to grant a family opportunity for an informal hearing before terminating assistance under an outstanding HAP contract. Comments ask HUD to clarify that the HA is not required to grant an advance hearing to redetermine the family's share of the rent at a reexamination (including a reduction of subsidy to zero by operation of the Section 8 subsidy formulas). In response, the rule is revised to specify (§ 982.555(a)(2)) that the HA must grant an advance hearing before terminating payments under an outstanding HAP contract in these three cases:

—A determination that a certificate program family is residing in a unit with a larger number of bedrooms than appropriate for the family unit size under the HA subsidy standards, or the HA determination to deny the family's request for an exception from the standards.

—A determination to terminate assistance because of the family's action or failure to act.

—A determination to terminate housing assistance payments because the participant family has been absent from the assisted unit for longer than the maximum period permitted under HA policy and HUD rules.

Notice to Participant

Comments recommend that the HA should be required to notify the family of the reasons for termination of assistance. The rule provides that the HA must notify the family of its right to request a hearing on a decision to deny or terminate assistance. The notice must include a brief statement of reasons for the HA decision. (§ 982.555(c)(2))

Other comments object to the administrative burden and cost to notify the family of the right to a hearing because of changes in family income or family size. When the HA determines family income or ''family unit size'' (the appropriate number of bedrooms for the family), the HA must give notice that the family may ask the HA to explain the basis of the HA determination, and that if the family does not agree with the determination, the family may request an informal hearing on the decision. (§ 982.555(c)(1)) Notice of the family right to a hearing can be included in the HA reexamination notice (requesting information for a reexamination), or in the HA notice of the determination after reexamination. The HA does not have to serve or mail any separate notice. For this reason, the process of giving the notice to the family does not require any substantial additional cost or administrative burden.

Time To Request Hearing

Comments recommend that HUD should specify the minimum period to appeal HA decisions. The comments state that HUD should allow HAs to establish a short minimum appeal time where assistance continues during the appeal, but should require that HAs allow one year to request a hearing if the participant is seeking assistance during the appeal.

The HA gives the family notice of the right to a hearing. (§ 982.555(c) (1) and (2)) The HA is required to adopt hearing procedures in its administrative plan. (§ 982.54(d)) In its hearing procedures, the HA can establish HA requirements for requesting a hearing, including any deadlines. If the HA decides to terminate assistance for a family, the HA notice must state the deadline for the family to request an informal hearing. (§ 982.555(c)(2)(iii))

In this rule, HUD does not set minimum or maximum periods for requesting a hearing. Such details are best left to determination by the HA. The HA may decide to establish different deadlines for different circumstances. The HA is in a better position to judge the practicality and effect of its hearing policies, and to modify its procedures in the light of local experience.

Hearing: Family Right to Examine HA Documents

The new rule adds one element to hearing procedures under the old rule. The rule now grants the family a right to pre-hearing discovery of HA documents, including records and regulations, that are directly relevant to the hearing. The family must be allowed to copy any such document at the family's expense. (§ 982.555(e)(2)(i))

These new discovery requirements are essentially the same as the public housing discovery requirements promulgated by HUD under Section 6(k) of the 1937 Housing Act. (42 U.S.C. 1437d(k))

Some comments approve allowing the family to examine and copy HA documents. Other comments object to allowing the family to preview HA evidence, and claim that this gives the family an unfair advantage. Comments recommend that the HA should have the right to see family documents.

The final rule retains without change the proposed provisions permitting family examination of HA documents prior to hearing. (§ 982.555(e)(2)(i)) This process helps the family present its case and respond to HA documents and argument. The discovery process can support the basic purpose of the hearing—to produce an accurate determination of the points at issue.

As suggested by comment, the final rule adds a new provision that grants the HA a parallel right to pre-hearing examination of relevant family documents. The family would be required to produce the documents at the HA offices. (§ 982.555(e)(2)(ii))

The rule provides that the HA may not rely on a document not produced in response to the family's request. Comments agree with this provision. Advance disclosure helps the family prepare for the hearing. Other comments indicate that the rule should provide a stronger sanction for the HA failure to disclose a document, by prohibiting the HA from raising any issue, fact or claim concerning the document.

In the final rule, the sanctions provision is retained as proposed. The HA may not rely on a document withheld from disclosure. Similarly, the rule provides that the family may not rely on a document not produced at request of the HA. Any additional sanctions for non-disclosure are left to the authority and judgment of the hearing officer, and should not be prescribed in the rule. The hearing officer may tailor the character and severity of the sanction to the facts of the immediate case.

At request of the other party, the HA or family must produce documents that are ''directly relevant'' to the hearing. Comments recommend that the rule designate what documents must be released in discovery with more specificity. HUD believes that the proposed standard is an adequate guide. As under any such standard, there can be disputes at the margin whether particular documents are directly relevant to the issues at the hearing. HUD is unable to devise a better standard, and no such standard is suggested in the comments.

Comments express concern that the family may lose documents. Under the rule, the HA can devise appropriate procedures for inspection of documents, including provision for supervised inspection. The HA is not required to allow the family to remove documents or files from the HA offices. The HA could, if desired, provide document copies to minimize the risk of losing originals or corruption of HA files.

The rule provides that the family may copy HA documents ''at the family's expense''. (§ 982.555(e)(2)(i)) Comments suggest that the HA should not be permitted to charge the family for copying documents. The comment is not adopted. The HA may work out appropriate local policies on copying charges (for example, policies that allow free copying of a limited number of pages).

Hearing Officer

As in the past, the rule provides that a hearing may be conducted by any person or persons designated by the HA, other than a person who made or approved the decision under review or a subordinate of this person. (§ 982.555(e)(4)(i))

Comments recommend that the hearing officer should not be a person connected to the HA. The comments state that a hearing officer who is an HA employee will tend to support a colleague's decision, and may be familiar with the issues and complaint.

The recommendation is not adopted. The designated hearing officer is responsible for exercising an independent and good faith judgment on the issues presented. Factual determinations concerning the individual family must be based on evidence presented at hearing. An HA employee or officer can render a fair and objective judgment. Conversely, precluding use of HA employees or officers will generally increase the expense of the hearing process. (For full discussion of the basis of the current provisions, see 49 FR 12229–12230)

X. Section 8 Certificate Program: Project-Based Assistance (PBC)

PBC: Moving the Rule

The regulations for the Project-based Certificate (PBC) Program have been moved to a separate subpart, 24 CFR part 983, since the tenant-based and project-based programs are very different.

PBC: Reducing Program Complexity and HUD Involvement; Initial HAP Contract Term

Comments state that the PBC program is difficult for HAs and HUD to administer, and operationally complex for all parties. The extent and timeliness of HUD review is criticized. Comments state that the PBC regulations inappropriately require HUD PBC reviews similar to the HUD reviews for applications for long term subsidy contracts under the Section 202 and Section 8 new construction programs. Comments note that the level of HUD activity for the PBC program is not justified by a five-year subsidy commitment.

HUD agrees that the HUD oversight is excessive for a five-year subsidy commitment, especially considering the limited HUD field office staff capacity to perform PBC reviews. The final rule significantly decreases HUD review responsibilities for the PBC program, and simplifies program administration. The requirements for a HUD cost containment review and intergovernmental review have been deleted. Initial contract rents for non-HUD insured, non-HA owned PBC projects will be set by the HA, based on appraisals conducted by a State certified general appraiser. The costs of the PBC appraisal will come from the administrative fees already paid to HAs. The HUD 2530 previous participation requirement has also been eliminated, and responsibility for PBC historic preservation and environmental review responsibilities have been assumed by States and units of local government pursuant to section 305(b) of the Multifamily Housing Property Disposition Reform Act of 1994. In addition, the rule eliminates the requirement for a HUD-approved HA schedule of leasing. The final rule also limits the initial PBC HAP contract term to five years, the typical funding term for new units.

Other changes have been made throughout the rule to delete requirements on matters which do not need to be regulated.

PBC: Maximum Number of PBC Units; Application to Implement a PBC Program

Comments suggested that HUD should allow project-basing in the voucher program, and should increase the percentage of certificate units which may be project-based. These suggestions have not been adopted. The statute does not permit project-basing of voucher units. The statute does not require that HUD permit project basing for more than 15 percent of assistance under the certificates (or 30 percent for rehabilitation of certain State-assisted units).

In order to further simplify program administration and in recognition that the ACC no longer lists the number of units by bedroom size, the references to the 15 and 30 percent limits in § 983.702 and § 983.703 have been revised to delete reference to ''units under ACC''. The 15 and 30 percent limits apply to the number of budgeted certificate units, not the number of units under ACC.

Section 983.3 has also been revised to delete the requirement that HAs indicate the bedroom sizes of the PBC units and identify a funding source for purposes of determining the maximum PBC HAP contract term. When approving the HAP contract term for PBC units, the HA must ensure that the contract authority for the funding source exceeds the estimated annual housing assistance payments for all tenant-based and project-based HAP contracts funded from the funding source.

PBC: Funding

Several comments recommend that HUD provide special funding for the PBC program. If HUD specifically allocated funds for PBC, HAs would be

coerced to implement a PBC program in order to receive funds. Fearing that HUD might in fact be considering setting aside funds for the PBC program, Congressional members instructed HUD in March 1988 that fair share allocations of certificate funding should be distributed as done in the past without regard to the PBC program, and ''whether or not HAs decide to attach Section 8 existing contracts to specific buildings should not affect HUD's regular selection procedure''.

PBC: Ineligible Housing; Use of State, Local, and Federal Subsidies

Many comments object to the proposed prohibition against selecting housing for the PBC program which in the past five years received (or will receive) local or State government below-market mortgage interest subsidy, construction or rehabilitation subsidy, or project-based rent subsidy. Comments state that subsidies from many sources are often necessary to construct or rehabilitate low-income housing. Local and State subsidies may result in lower rents and shallower federal subsidies. One comment recommended that any subsidy restrictions should be limited to programs that prohibit rents in excess of fixed percentages of income equal to or less than the limits used for the public housing and Section 8 programs. In response to these public comments, HUD is deleting the proposed subsidy prohibition against providing PBC for a project that has received subsidy in the last 5 years.

Comments objected to the proposed provision disqualifying housing for the PBC program if the rehabilitation or construction is begun before execution of the Agreement to Enter Into a HAP Contract (Agreement). Comments pointed out that developers often begin construction or rehabilitation work prior to Agreement in order to secure tax credits and other funding commitments. HUD has limited flexibility in this area. The statute requires that the owner ''agree'' to construct or perform the qualifying rehabilitation. Thus, an Agreement must be executed prior to any construction or the qualifying rehabilitation. The final rule continues to restrict all pre-Agreement construction or rehabilitation. Although HUD has latitude under the statute to allow commencement of rehabilitation in excess of the $1000 per unit qualifying rehabilitation threshold, HUD has decided not to exercise this authority since owners may begin rehabilitation early to circumvent compliance with the PBC relocation requirements and other federal requirements such as Davis-Bacon wage rates.

The final rule also deletes the prohibition against selecting HUD-owned properties for the PBC program.

PBC: Disabled Issues

Comment suggested language changes to use phrase ''disabled'' instead of ''handicapped''. This comment is accommodated throughout Part 983. In addition, the rule has been clarified to state that accessibility improvements which are counted towards the $1000 per unit rehabilitation eligibility threshold are limited to accessibility improvements to the property required by Section 504 of the Rehabilitation Act of 1973 and the Fair Housing Amendments Act of 1988. (§ 983.8)

PBC: Relocation

There was one comment on the revised PBC relocation requirements. This comment was addressed in the final PBC relocation rule published in the **Federal Register** on June 6, 1994. The final rule relocation text is incorporated into this rulemaking and is located in § 983.10.

PBC: Owner Selection Policies

Comment questioned the need for HUD to approve owner PBC tenant selection policies and notify families of the reasons why they were not selected. Comment states that HUD has implemented the statute verbatim and requests that HUD provide mandatory standards concerning tenant suitability identical to those contained in the public housing rule at 24 CFR 960.205. Comment erroneously states that standards are necessary since families rejected for a PBC unit cannot seek other housing assisted in the tenant-based certificate program. The comment is wrong. A family rejected by a PBC owner does not lose eligibility for, or position on, the waiting list for tenant-based assistance.

HUD agrees that a requirement for HUD approval of owner PBC tenant selection policies is not necessary. Since HUD approval of the owner's policies in this area is not mandated by the statute, the final rule does not include the requirement that the owner's tenant selection policy be submitted to the HUD field office for review and approval. HUD declines to impose additional regulatory requirements in this area.

PBC: Contract Rents

The comments concerning initial contract rents and contract rent adjustments will be addressed in a later rulemaking. Today's rulemaking does not modify current program requirements in these areas.

PBC: Organization of the Rule

The section numbers have been revised since the PBC rule is now part 983 instead of a subpart under part 882. In addition, the housing quality standards for rehabilitation and new construction units were combined under one section instead of being contained in separate sections. Likewise, the site and neighborhood standards for rehabilitation and new construction units which were formally contained in separate sections were combined under one section.

XI. Findings and Certifications

A. Impact on the Economy

This rule does not constitute a ''major rule'' as that term is defined in Section 1(b) of Executive Order 12291, Regulatory Planning Process. Analysis of the rule indicates that it does not: (1) Have an annual effect on the economy of $100 million or more; (2) cause a major increase in costs or prices for consumers, individual industries, federal, State or local government agencies or geographic regions; or (3) have a significant adverse effect on competition, employment, investment, productivity, innovation or on the ability of United States-based enterprises to compete with foreign-based enterprises in domestic or export markets.

B. Impact on the Environment

A Finding of No Significant Impact (FONSI) with respect to the environment was made in connection with the proposed rule in accordance with HUD regulations at 24 CFR part 50 that implement section 102(2)(C) of the National Environmental Policy Act of 1969, 42 U.S.C. 4332. Since the provisions of this final rule with respect to the effect on the environment are not changed from the proposed rule, the original FONSI is still valid. The FONSI is available for public inspection and copying during regular business hours (7:30 a.m. to 5:30 p.m.) in the Office of the Rules Docket Clerk, room 10276, 451 Seventh Street, SW., Washington, DC 20410–0500.

C. Federalism Impact

The General Counsel, as the Designated Official under section 6(a) of Executive Order 12612, Federalism, has determined that the policies contained in this rule have impact on States or their political subdivisions only to the extent required by the statute being implemented. Since the rule merely carries out a statutory mandate and does

not create any new significant requirements, it is not subject to review under the Executive Order.

D. Impact on the Family

The General Counsel, as the Designated Official under Executive Order 12606, The Family, has determined that this rule does not have potential for significant impact on family formation, maintenance, and general well-being, and, thus is not subject to review under the Order.

E. Impact on Small Entities

The Secretary, in accordance with the Regulatory Flexibility Act (5 U.S.C. 605(b)), has reviewed this rule before publication and by approving it certifies that this rule will not have a significant impact on a substantial number of small entities, because it does not place major burdens on housing authorities or housing owners.

F. Regulatory Agenda

This rule was listed as sequence number 1531 under the Office of the Assistant Secretary for Public and Indian Housing in the Department's Semiannual Regulatory Agenda published on May 8, 1995 (60 FR 23368, 23403) in accordance with Executive Order 12866 and the Regulatory Flexibility Act.

Regulatory Review

This rule was reviewed by the Office of Management and Budget under Executive Order 12866, Regulatory Planning and Review. Any changes made to the rule as a result of that review are clearly identified in the docket file, which is available for public inspection in the office of the Department's Rules Docket Clerk, room 10276, 451 Seventh St. SW., Washington, DC 20410.

List of Subjects

24 CFR Part 882

Grant programs—housing and community development, Homeless, Lead poisoning, Manufactured homes, Rent subsidies, Reporting and recordkeeping requirements.

24 CFR Part 887

Grant programs—housing and community development, Rent subsidies, Reporting and recordkeeping requirements.

24 CFR Part 982

Grant programs—housing and community development, Housing, Rent subsidies, Reporting and recordkeeping requirements.

24 CFR Part 983

Grant programs—housing and community development, Rent subsidies, Reporting and recordkeeping requirements.

Accordingly, Parts 882 and 887 of chapter VIII and Parts 982 and 893 of Chapter IX of title 24 of the Code of Federal Regulations are amended as follows:

1. The heading for part 882 is revised to read as follows:

PART 882—SECTION 8 CERTIFICATE AND MODERATE REHABILITATION PROGRAMS

2. The authority citation for part 882 is revised to read as follows:

Authority: 42 U.S.C. 1437f and 3535(d).

3. Section 882.101 is amended by revising paragraph (b), and by adding new paragraphs (c) and (d), to read as follows:

§ 882.101 Applicability and scope.

* * * * *

(b) *Existing Housing* means housing that is in Decent, Safe, and Sanitary condition. Existing Housing does not include public housing.

(c) *Certificate program*. (1) Program regulations for the Section 8 tenant-based certificate and voucher programs are located at 24 CFR part 982. Program regulations for the Section 8 project-based certificate program are located at 24 CFR part 983.

(2) The following provisions of subpart A of this part are applicable to the Section 8 certificate program: §§ 882.101, 882.106, 882.108, 882.110, and paragraphs (m), (n), (o), (p) and (q) of § 882.109.

(3) In applying provisions of subpart A of this part, the definitions in § 882.102 are applicable to the Section 8 certificate program.

(4) Subparts C and F of this part are applicable to the Section 8 certificate program.

(5) Subpart G of this part is applicable to the Section 8 project-based certificate program.

(d) *Moderate rehabilitation programs*. (1) Subparts D and E of this part are applicable to the Section 8 Moderate Rehabilitation Program. For applicability of other part 882 provisions to this program, see § 882.401(d).

(2) Subpart H of this part is applicable to the Section 8 Moderate Rehabilitation Single Room Occupancy Program for Homeless Individuals. For applicability of other part 882 provisions to this program, see references in subpart H of this part.

§§ 882.103, 882.104, 882.105, 882.107, 882.116, 882.117, 882.119 and 882.121 [Removed and Reserved]

4. In subpart A of this part 882, the following sections are removed and reserved: §§ 882.103, 882.104, 882.105, 882.107, 882.116, 882.117, 882.119 and 882.121.

§ 882.123 [Amended]

5. In § 882.123, paragraphs (a) through (d), and paragraph (f), are removed and reserved, and paragraph (i) is removed.

§§ 882.201–882.211, 882.213, 882.215, 882.216, and Appendix I of Subpart B [Amended]

6. In subpart B of this part 882, §§ 882.201 through 882.211, 882.213, 882.215, and 882.216 are removed and reserved, and Appendix I is removed.

7. Subpart G of this part 882 is amended by revising § 882.701, to read as follows:

§ 882.701 Purpose and applicability.

Subpart G of this part states requirements concerning initial and adjusted Contract Rents in the Section 8 project-based certificate program. Other program regulations for the Section 8 project-based certificate program are located at 24 CFR part 983.

§§ 882.702 through 882.713 [Removed and Reserved]

8. Sections 882.702 through 882.713 are removed and reserved.

§§ 882.716 through 882.759 [Removed]

9. Sections 882.716 through 882.759 are removed.

PART 887—HOUSING VOUCHERS

10. The authority citation for part 887 is revised to read as follows:

Authority: 42 U.S.C. 1437f(o) and 3535(d).

11. In subpart A of this part 887, § 887.3 is revised, to read as follows:

§ 887.3 Scope and applicability.

(a) The provisions of this part apply to the Section 8 voucher program authorized by section 8(o) of the 1937 Act. This part states voucher program requirements concerning the payment standard and housing assistance payment, and concerning special housing types. Other program regulations for the Section 8 tenant-based certificate and voucher programs are located at 24 CFR part 982.

(b) The definitions in § 887.7 are applicable in applying the provision of this part.

§ 887.5 [Removed]

12. Section 887.5 is removed.

Subparts B through G and Subpart I [Removed and Reserved]

13. Subparts B through G and Subpart I of this part 887 are removed and reserved.

Subpart L [Removed]

13a. Subpart L of this part 887 is removed.

PART 982—SECTION 8 TENANT-BASED ASSISTANCE: UNIFIED RULE FOR TENANT-BASED ASSISTANCE UNDER THE SECTION 8 RENTAL CERTIFICATE PROGRAM AND THE SECTION 8 RENTAL VOUCHER PROGRAM

14. The authority citation for part 982 is revised, to read as follows:

Authority: 42 U.S.C. 1437f and 3535(d).

15. In part 982, Subpart A is revised; subparts B, C, D, G, H, I, J, and L are added; and subparts F, K, and M are reserved, to read as follows:

Subpart A—General Information

Sec.
982.1 Tenant-based programs: Purpose and structure.
982.2 Applicability.
982.3 HUD.
982.4 Definitions.
982.5 Notices required by this part.

Subpart B—HUD Requirements and HA Plan for Administration of Program

982.51 HA authority to administer program.
982.52 HUD requirements.
982.53 Equal opportunity requirements.
982.54 Administrative plan.

Subpart C—Funding and HA Application for Funding

982.101 Allocation of funding.
982.102 HA application for funding.
982.103 HUD review of application.

Subpart D—Annual Contributions Contract and HA Administration of Program

982.151 Annual contributions contract.
982.152 Administrative fee.
982.153 HA responsibilities.
982.154 ACC reserve account.
982.155 Administrative fee reserve.
982.156 Depositary for program funds.
982.157 Budget and expenditure.
982.158 Program accounts and records.
982.159 Audit requirements.
982.160 HUD determination to administer a local program.
982.161 Conflict of interest.
982.162 Use of HUD-required contracts and other forms.
982.163 Fraud recoveries.

* * * * *

Subpart F—[Reserved]

Subpart G—Leasing a Unit

982.301 Information when family is selected.
982.302 Issuance of certificate or voucher; Requesting HA approval to lease a unit.
982.303 Term of certificate or voucher.
982.304 Illegal discrimination: HA assistance to family.
982.305 HA approval to lease a unit.
982.306 HA disapproval of owner.
982.307 Owner responsibility for screening tenants.
982.308 Lease.
982.309 Term of assisted tenancy.
982.310 Owner termination of tenancy.
982.311 When assistance is paid.
982.312 Absence from unit.
982.313 Security deposit; Amounts owed by tenant.
982.314 Move with continued tenant-based assistance.
982.315 Family break-up.

Subpart H—Where Family Can Live and Move

982.351 Overview.
982.352 Eligible housing.
982.353 Where family can lease a unit with tenant-based assistance.
982.354 Portability: Administration by initial HA outside the initial HA jurisdiction.
982.355 Portability: Administration by receiving HA.

Subpart I—Dwelling Unit: Housing Quality Standards, Subsidy Standards, Inspection and Maintenance

982.401 Housing quality standards (HQS).
982.402 Subsidy standards.
982.403 Terminating HAP contract: When unit is too big or too small.
982.404 Maintenance: Owner and family responsibility; HA remedies.
982.405 HA periodic unit inspection.
982.406 Enforcement of HQS.

Subpart J—Housing Assistance Payments Contract and Owner Responsibility

982.451 Housing assistance payments contract.
982.452 Owner responsibilities.
982.453 Owner breach of contract.
982.454 Termination of HAP contract: Insufficient funding.
982.455 Termination of HAP contract: Expiration and opt-out.
982.456 Third parties.
982.457 Owner refusal to lease.

Subpart K—Rent and Housing Assistance Payment—[Reserved]

Subpart L—Family Obligations; Denial and Termination of Assistance

982.551 Obligations of participant.
982.552 HA denial or termination of assistance for family.
982.553 Crime by family members.
982.554 Informal review for applicant.
982.555 Informal hearing for participant.

Subpart M—Special Housing Types—[Reserved]

Subpart A—General Information

§ 982.1 Tenant-based programs: Purpose and structure.

(a) *General description.* (1) The HUD rental voucher program and the HUD rental certificate program provide rent subsidies so eligible families can afford rent for decent, safe, and sanitary housing. Both programs are administered by State, local governmental or tribal bodies called housing agencies (HAs). HUD provides funds to an HA for rent subsidy on behalf of eligible families. HUD also provides funds for HA administration of the programs.

(2) Families select and rent units that meet program housing quality standards. If the HA approves a family's unit and lease, the HA contracts with the owner to make rent subsidy payments on behalf of the family. An HA may not approve a lease unless the rent is reasonable.

(3) In the certificate program, the rental subsidy is generally based on the actual rent of a unit leased by the assisted family. In the voucher program, the rental subsidy is determined by a formula, and is not based on the actual rent of the leased unit.

(4) In the certificate program, the unit rent generally may not exceed a HUD-published fair market rent for rental units in the local housing market. For most families, the subsidy is the difference between the unit rent and 30 percent of adjusted monthly income. In the voucher program, the subsidy for most families is the difference between 30 percent of adjusted monthly income and a ''payment standard'' that is based on the HUD-published fair market rent. If the unit rent is less than the voucher payment standard, the family pays a smaller share of the rent. If the unit rent is more than the payment standard, the family pays a larger share of the rent.

(b) *Tenant-based and project-based assistance.* (1) Section 8 assistance may be ''tenant-based'' or ''project-based''. In project-based programs, rental assistance is paid for families who live in specific housing developments or units. With tenant-based assistance, the assisted unit is selected by the family. The family may rent a unit anywhere in the United States in the jurisdiction of an HA that runs a certificate or voucher program.

(2) Except for project-based assistance under the certificate program (covered in 24 CFR part 983), all assistance under the certificate and voucher programs is ''tenant-based''. After the family selects

a suitable unit, the HA enters into a contract with the owner to make rent subsidy payments to the owner to subsidize occupancy by the family. The contract only covers a single unit and the specific assisted family. If the family moves out of the leased unit, the contract with the owner terminates. In the tenant-based programs, the family may move to another unit with continued assistance so long as the family is complying with program requirements.

§ 982.2 Applicability.

(a) Part 982 is a unified statement of program requirements for the tenant-based housing assistance programs under Section 8 of the United States Housing Act of 1937 (42 U.S.C. 1437f). The tenant-based programs are the Section 8 tenant-based rental certificate program and the Section 8 rental voucher program.

(b) Unless specifically stated in this part, requirements for both tenant-based programs are the same.

§ 982.3 HUD.

The HUD field offices have been delegated responsibility for day-to-day administration of the program by HUD. In exercising these functions, the field offices are subject to HUD regulations and other HUD requirements issued by HUD headquarters. Some functions are specifically reserved to HUD headquarters.

§ 982.4 Definitions.

Absorption. In portability, the point at which a receiving HA stops billing the initial HA for assistance on behalf of a portability family. The receiving HA uses funds available under the receiving HA consolidated ACC.

ACC. Annual contributions contract.

ACC reserve account (formerly ''project reserve''). Account established by HUD from amounts by which the maximum payment to the HA under the consolidated ACC (during an HA fiscal year) exceeds the amount actually approved and paid. This account is used as the source of additional payments for the program.

Adjusted income. Defined in 24 CFR 813.102.

Administrative fee. Fee paid by HUD to the HA for administration of the program.

Administrative fee reserve (formerly ''operating reserve''). Account established by HA from excess administrative fee income. The administrative fee reserve must be used for housing purposes. See § 982.155.

Administrative plan. The administrative plan describes HA policies for administration of the tenant-based programs. See Part B of part 982. Section 982.54 describes subjects that must be covered in the administrative plan.

Admission. The effective date of the first HAP contract for a family (first day of initial lease term) in a tenant-based program. This is the point when the family becomes a participant in the program.

Annual contributions contract (ACC). A written contract between HUD and an HA. Under the contract HUD agrees to provide funding for operation of the program, and the HA agrees to comply with HUD requirements for the program.

Annual income. Defined in 24 CFR 813.106.

Applicant (applicant family). A family that has applied for admission to a program, but is not yet a participant in the program.

Budget authority. An amount authorized and appropriated by the Congress for payment to HAs under the program. For each funding increment in an HA program, budget authority is the maximum amount that may be paid by HUD to the HA over the ACC term of the funding increment.

Certificate. A document issued by an HA to a family selected for admission to the rental certificate program. The certificate describes the program, and the procedures for HA approval of a unit selected by the family. The certificate also states the obligations of the family under the program.

Certificate or voucher holder. A family holding a voucher or certificate with unexpired search time.

Certificate program. Rental certificate program.

Consolidated annual contributions contract (consolidated ACC). See § 982.151.

Contiguous MSA. In portability, an MSA that shares a common boundary with the MSA in which the jurisdiction of the initial HA is located.

Continuously assisted. An applicant is continuously assisted under the 1937 Housing Act if the family is already receiving assistance under any 1937 Housing Act program when the family is admitted to the certificate or voucher program.

Contract authority. The maximum annual payment by HUD to an HA for a funding increment.

Disabled person. See the definition of *Person with disabilities.*

Displaced person. Defined in 24 CFR 812.2.

Domicile. The legal residence of the household head or spouse as determined in accordance with State and local law.

Drug-related criminal activity. Term means:

(1) Drug-trafficking; or

(2) Illegal use, or possession for personal use, of a controlled substance (as defined in section 102 of the Controlled Substances Act (21 U.S.C. 802).

Drug-trafficking. The illegal manufacture, sale or distribution, or the possession with intent to manufacture, sell or distribute, of a controlled substance (as defined in section 102 of the Controlled Substances Act (21 U.S.C. 802)).

Elderly person. A person who is at least 62 years of age.

Eligibility. See § 982.201.

Exception rent. In the certificate program, an initial rent (contract rent plus any utility allowance) in excess of the published FMR. In the certificate program, the exception rent is approved by HUD, and is used in determining the initial contract rent. In the voucher program, the HA may adopt a payment standard up to the exception rent limit approved by HUD for the HA certificate program.

Fair market rent (FMR). The rent, including the cost of utilities (except telephone), that would be required to be paid in the housing market area to obtain privately owned, existing, decent, safe and sanitary rental housing of modest (non-luxury) nature with suitable amenities. Fair market rents for existing housing are established by HUD for housing units of varying sizes (number of bedrooms), and are published in the **Federal Register** in accordance with 24 CFR part 888.

Family. See 24 CFR 812.2. Family composition is discussed at § 982.201(c).

Family self-sufficiency program (FSS program). The program established by an HA to promote self-sufficiency of assisted families, including the provision of supportive services (42 U.S.C. 1437u). See 24 CFR part 984.

Family unit size. The appropriate number of bedrooms for a family. Family unit size is determined by the HA under the HA subsidy standards.

Federal preference. A preference under federal law for admission of applicant families that are any of the following:

(1) Involuntarily displaced.

(2) Living in substandard housing (including families that are homeless or living in a shelter for the homeless).

(3) Paying more than 50 percent of family income for rent.

Federal preference holder. An applicant that qualifies for a federal preference.

FMR. Fair market rent.

FMR/exception rent limit. The Section 8 existing housing fair market rent published by HUD headquarters, or any exception rent. In the certificate program, the initial contract rent for a dwelling unit plus any utility allowance may not exceed the FMR/exception rent limit (for the dwelling unit or for the family unit size). In the voucher program, the HA may adopt a payment standard up to the FMR/exception rent limit.

FSS program. Family self-sufficiency program.

Funding increment. Each commitment of budget authority by HUD to an HA under the consolidated annual contributions contract for the HA program.

HA. Housing Agency.

HAP contract. Housing assistance payments contract.

Housing agency (HA). A State, county, municipality or other governmental entity or public body (or agency or instrumentality thereof) authorized to engage in or assist in the development or operation of low-income housing, including an Indian housing authority (IHA). (''PHA'' and ''HA'' mean the same thing.)

Housing assistance payment. The monthly assistance payment by an HA. The total assistance payment consists of:

(1) A payment to the owner for rent to owner under the family's lease.

(2) An additional payment to the family if the total assistance payment exceeds the rent to owner. In the certificate program, the additional payment is called a ''utility reimbursement''.

Housing assistance payments contract (HAP contract). A written contract between an HA and an owner, in the form prescribed by HUD headquarters, in which the HA agrees to make housing assistance payments to the owner on behalf of an eligible family.

Housing quality standards (HQS). The HUD minimum quality standards for housing assisted under the tenant-based programs. See § 982.401.

HQS. Housing quality standards.

HUD. The U.S. Department of Housing and Urban Development.

HUD requirements. HUD requirements for the Section 8 programs. HUD requirements are issued by HUD headquarters, as regulations, **Federal Register** notices or other binding program directives.

IHA. Indian housing authority.

Indian. Any person recognized as an Indian or Alaska Native by an Indian Tribe, the federal government, or any State.

Indian housing authority (IHA). A housing agency established either:

(1) By exercise of the power of self-government of an Indian Tribe, independent of State law; or

(2) By operation of State law providing specifically for housing authorities for Indians.

Initial contract rent. In the certificate program, the contract rent at the beginning of the initial lease term.

Initial HA. In portability, the term refers to both:

(1) An HA that originally selected a family that subsequently decides to move out of the jurisdiction of the selecting HA.

(2) An HA that absorbed a family that subsequently decides to move out of the jurisdiction of the absorbing HA.

Initial lease term. The initial term of the assisted lease. The initial lease term must be for at least one year.

Initial rent to owner. The rent to owner at the beginning of the initial lease term.

Jurisdiction. The area in which the HA has authority under State and local law to administer the program.

Lease. (1) A written agreement between an owner and a tenant for the leasing of a dwelling unit to the tenant. The lease establishes the conditions for occupancy of the dwelling unit by a family with housing assistance payments under a HAP Contract between the owner and the HA.

(2) In cooperative housing, a written agreement between a cooperative and a member of the cooperative. The agreement establishes the conditions for occupancy of the member's cooperative dwelling unit by the member's family with housing assistance payments to the cooperative under a HAP contract between the cooperative and the HA. For purposes of part 982, the cooperative is the Section 8 ''owner'' of the unit, and the cooperative member is the section 8 ''tenant''.

Lease addendum. In the lease between the tenant and the owner, the lease language required by HUD.

Live-in aide. Defined in 24 CFR 813.102.

Local preference. A preference used by the HA to select among applicant families without regard to their federal preference status.

Local preference limit. Ten percent of total annual waiting list admissions to the HA's tenant-based certificate and voucher programs. The local preference limit is used to select among applicants without regard to their federal preference status.

Low-income family. Defined in 24 CFR 813.102. (Section 982.201(b) describes when a low-income family is income-eligible for admission to the certificate or voucher program.)

MSA. Metropolitan statistical area.

1937 Housing Act. The United States Housing Act of 1937 (42 U.S.C. 1437 and following sections). The HUD tenant-based program is authorized by Section 8 of the 1937 Housing Act (42 U.S.C. 1437f).

1937 Housing Act program. Any of the following programs:

(1) The public housing program or Indian housing program.

(2) Any program assisted under Section 8 of the 1937 Act (42 U.S.C. 1437f) (including assistance under a Section 8 tenant-based or project-based program).

(3) The Section 23 leased housing program.

(4) The Section 23 housing assistance payments program. (''Section 23'' means Section 23 of the United States Housing Act of 1937 before enactment of the Housing and Community Development Act of 1974.)

NOFA. Notice of funding availability.

Notice of funding availability (NOFA). For funding (contract or budget authority) that HUD distributes by competitive process, HUD headquarters invites HA applications by publishing a NOFA in the **Federal Register**. The NOFA explains how to apply for assistance, and the criteria for awarding the funding.

Operating reserve. Administrative fee reserve.

Owner. Any person or entity with the legal right to lease or sublease a unit to a participant.

Participant (participant family). A family that has been admitted to the HA program, and is currently assisted in the program. The family becomes a participant on the effective date of the first HAP contract executed by the HA for the family (first day of initial lease term).

Payment standard. In the voucher program, an amount used by the HA to calculate the housing assistance payment for a family. Each payment standard amount is based on the fair market rent. The HA adopts a payment standard for each bedroom size and for each fair market rent area in the HA jurisdiction. The payment standard for a family is the maximum monthly subsidy payment.

PBC. Project-based certificate program. See 24 CFR part 983.

Person with disabilities (disabled person). Defined in 24 CFR 813.102.

PHA. Public housing agency. See definition of ''housing agency''. (''Public housing agency'' and ''housing agency'' mean the same thing.)

Portability. Renting a dwelling unit with Section 8 tenant-based assistance outside the jurisdiction of the initial HA.

Premises. The building or complex in which the dwelling unit is located, including common areas and grounds.

Program. The tenant-based certificate program or voucher program.

Project-based. Rental assistance that is attached to the structure.

Project-based certificate program (PBC). Project-based assistance under 24 CFR part 983, using funding under the consolidated ACC for the HA certificate program.

Project reserve. ACC reserve account. See § 982.154.

Public housing agency (PHA). A Housing Agency (HA).

Ranking preference. A preference used by the HA to select among applicant families that qualify for federal preference.

Reasonable rent. A rent to owner that is not more than either:

(1) Rent charged for comparable units in the private unassisted market; or

(2) Rent charged by the owner for a comparable assisted or unassisted unit in the building or premises.

Receiving HA. In portability, an HA that receives a family selected for participation in the tenant-based program of another HA. The receiving HA issues a certificate or voucher, and provides program assistance to the family.

Rental certificate. Certificate.

Rental certificate program. Certificate program.

Rental voucher. Voucher.

Rental voucher program. Voucher program.

Rent to owner. The monthly rent payable to the owner under the lease. Rent to owner includes payment for any services, maintenance and utilities to be provided by the owner in accordance with the lease.

Residency preference. An HA preference for admission of families that reside anywhere in a specified area, including families with a member who works or has been hired to work in the area (''residency preference area'').

Residency preference area. The specified area where families must reside to qualify for a residency preference.

Special admission. Admission of an applicant that is not on the HA waiting list, or without considering the applicant's waiting list position.

Subsidy standards. Standards established by an HA to determine the appropriate number of bedrooms and amount of subsidy for families of different sizes and compositions. See definition of ''family unit size''.

Suspension. Stopping the clock on the term of a family's certificate or voucher, for such period as determined by the HA, from the time when the family submits a request for HA approval to lease a unit, until the time when the HA approves or denies the request.

Tenant. The person or persons (other than a live-in aide) who executes the lease as lessee of the dwelling unit.

Tenant-based. Rental assistance that is not attached to the structure.

Tenant rent. In the certificate program, total tenant payment minus any utility allowance.

Total tenant payment. In the certificate program, defined in 24 CFR 813.102 and 24 CFR 813.107.

Unit. Dwelling unit.

United States Housing Act of 1937 (1937 Housing Act). The basic law that authorizes the public and Indian housing programs, and the Section 8 programs. (42 U.S.C. 1437 and following sections.)

Utility allowance. Defined in 24 CFR 813.102.

Utility reimbursement. In the certificate program, the amount, if any, by which any utility allowance for family-paid utilities or other housing services exceeds the total tenant payment.

Very low-income family. Defined in 24 CFR 813.102.

Violent criminal activity. Any illegal criminal activity that has as one of its elements the use, attempted use, or threatened use of physical force against the person or property of another.

Voucher (rental voucher). A document issued by an HA to a family selected for admission to the voucher program. The voucher describes the program, and the procedures for HA approval of a unit selected by the family. The voucher also states the obligations of the family under the program.

Voucher program. Rental voucher program.

Waiting list admission. An admission from the HA waiting list.

§ 982.5 Notices required by this part.

Where part 982 requires any notice to be given by the HA, the family or the owner, the notice must be in writing.

Subpart B—HUD Requirements and HA Plan for Administration of Program

§ 982.51 HA authority to administer program.

(a) The HA must be a governmental entity or public body with authority to administer the tenant-based program. The HA must provide HUD evidence, satisfactory to HUD, of such authority, and of the HA jurisdiction.

(b) The evidence submitted by the HA to HUD must include enabling legislation and a supporting legal opinion satisfactory to HUD. The HA must submit additional evidence when there is a change that affects its status as an HA, authority to administer the program, or the HA jurisdiction.

§ 982.52 HUD requirements.

(a) The HA must comply with HUD regulations and other HUD requirements for the program. HUD requirements are issued by HUD headquarters, as regulations, **Federal Register** notices or other binding program directives.

(b) The HA must comply with the consolidated ACC and the HA's HUD-approved applications for program funding.

§ 982.53 Equal opportunity requirements.

(a) Participation in the tenant-based program requires compliance with all equal opportunity requirements imposed by contract or federal law, including applicable requirements under:

(1) The Fair Housing Act, 42 U.S.C. 3610–3619 (implementing regulations at 24 CFR parts 100, *et seq.*);

(2) Title VI of the Civil Rights Act of 1964, 42 U.S.C. 2000d (implementing regulations at 24 CFR part 1);

(3) The Age Discrimination Act of 1975, 42 U.S.C. 6101–6107 (implementing regulations at 24 CFR part 146);

(4) Executive Order 11063, Equal Opportunity in Housing (1962), as amended, Executive Order 12259, 46 FR 1253 (1980), as amended, Executive Order 12892, 59 FR 2939 (1994) (implementing regulations at 24 CFR part 107);

(5) Section 504 of the Rehabilitation Act of 1973, 29 U.S.C. 794 (implementing regulations at 24 CFR part 8); and

(6) Title II of the Americans with Disabilities Act, 42 U.S.C. 12101, *et seq.*

(b) For the application of equal opportunity requirements to an Indian Housing Authority, *see* 24 CFR 950.115.

(c) The HA must submit a signed certification to HUD of the HA's intention to comply with the Fair Housing Act, Title VI of the Civil Rights Act of 1964, the Age Discrimination Act of 1975, Executive Order 11063, Section 504 of the Rehabilitation Act of 1973 and Title II of the Americans with Disabilities Act.

§ 982.54 Administrative plan.

(a) The HA must adopt a written administrative plan that establishes local policies for administration of the program in accordance with HUD requirements. The administrative plan and any revisions of the plan must be

formally adopted by the HA Board of Commissioners or other authorized HA officials. The administrative plan states HA policy on matters for which the HA has discretion to establish local policies.

(b) The administrative plan must be in accordance with HUD regulations and other requirements. The HA must revise the administrative plan if needed to comply with HUD requirements. The HA must give HUD a copy of the administrative plan.

(c) The HA must administer the program in accordance with the HA administrative plan.

(d) The HA administrative plan must cover HA policies on these subjects:

(1) How the HA selects applicants from the HA waiting list, including applicants with federal and other preferences, and procedures for closing and reopening the HA waiting list;

(2) Issuing or denying vouchers or certificates, including HA policy governing the voucher or certificate term and any extensions or suspension of the term. ''Suspension'' means stopping the clock on the term of a family's certificate or voucher after the family submits a request for lease approval. If the HA decides to allow extensions or suspensions of the certificate or voucher term, the HA administrative plan must describe how the HA determines whether to grant extensions or suspensions, and how the HA determines the length of any extension or suspension;

(3) Any special rules for use of available funds when HUD provides funding to the HA for a special purpose (e.g., desegregation), including funding for specified families or a specified category of families;

(4) Occupancy policies, including:

(i) Definition of what group of persons may qualify as a ''family'';

(ii) Definition of when a family is considered to be ''continuously assisted'';

(5) Encouraging participation by owners of suitable units located outside areas of low income or minority concentration;

(6) Assisting a family that claims that illegal discrimination has prevented the family from leasing a suitable unit;

(7) A statement of the HA policy on providing information about a family to prospective owners;

(8) Disapproval of owners;

(9) Subsidy standards;

(10) Family absence from the dwelling unit;

(11) How to determine who remains in the program if a family breaks up;

(12) Informal review procedures for applicants;

(13) Informal hearing procedures for participants;

(14) For the voucher program: the process for establishing and revising payment standards, including affordability adjustments;

(15) Special policies concerning special housing types in the program (e.g., use of shared housing); and

(16) Policies concerning payment by a family to the HA of amounts the family owes the HA.

Subpart C—Funding and HA Application for Funding

§ 982.101 Allocation of funding.

(a) *Allocation to HUD offices.* The Department allocates budget authority for the tenant-based programs to HUD field offices.

(b) *Section 213(d) allocation.* (1) Section 213(d) of the HCD Act of 1974 (42 U.S.C. 1439) establishes requirements for allocation of assisted housing budget authority. Some budget authority is exempt by law from allocation under section 213(d). Unless exempted by law, budget authority for the tenant-based programs must be allocated in accordance with section 213(d).

(2) Budget authority subject to allocation under section 213(d) is allocated in accordance with 24 CFR part 791, subpart D. There are three categories of section 213(d) funding allocations under part 791 of this title:

(i) funding retained in a headquarters reserve for purposes specified by law (e.g., settlement of litigation);

(ii) funding incapable of geographic formula allocation (e.g., for renewal of expiring funding increments); or

(iii) funding allocated by an objective fair share formula. Funding allocated by fair share formula is distributed by a competitive process.

(c) *Competitive process.* For budget authority that is distributed by competitive process, the Department solicits applications from HAs by publishing one or more notices of funding availability (NOFA) in the **Federal Register**. See 24 CFR part 12, subpart B; and 24 CFR 791.406. The NOFA explains how to apply for assistance, and specifies the criteria for awarding the assistance. The NOFA may identify any special program requirements for use of the funding.

§ 982.102 HA application for funding.

(a) An HA must submit an application for program funding to HUD at the time and place and in the form required by HUD.

(b) For competitive funding under a NOFA, the application must be submitted by an HA in accordance with the requirements of the NOFA.

(c) The application must include all information required by HUD. HUD requirements may be stated in the HUD-required form of application, the NOFA, or other HUD instructions.

(d) The application must meet requirements of:

(1) HUD's drug-free workplace regulations at 24 CFR part 24, subpart F; and

(2) HUD's anti-lobbying regulations at 24 CFR part 87.

§ 982.103 HUD review of application.

(a) *Processing applications.* (1) HUD will provide opportunity for the chief executive officer of the unit of general local government to review and comment on an application for funding for more than 12 units. The local comment requirements are stated in 24 CFR part 791, subpart C.

(2) For competitive funding under a NOFA, HUD must evaluate an application on the basis of the selection criteria stated in the NOFA, and must consider the HA capability to administer the program.

(3) HUD must consider any comments received from the unit of general local government.

(b) *Approval or disapproval of HA funding application.* (1) HUD must notify the HA of its approval or disapproval of the HA funding application.

(2) When HUD approves an application, HUD must notify the HA of the amount of approved funding.

(3) For budget authority that is distributed to HAs by competitive process, documentation of the basis for provision or denial of assistance is available for public inspection in accordance with 24 CFR 12.14(b).

Subpart D—Annual Contributions Contract and HA Administration of Program

§ 982.151 Annual contributions contract.

(a) *Nature of ACC.* (1) An annual contributions contract (ACC) is a written contract between HUD and an HA. Under the ACC, HUD agrees to make payments to the HA, over a specified term, for housing assistance payments to owners and for the HA administrative fee. The ACC specifies the maximum annual payment by HUD, and the maximum payment over the ACC term. The HA agrees to administer the program in accordance with HUD regulations and requirements.

(2) HUD's commitment to make payments for each funding increment in the HA program constitutes a separate ACC. However, commitments for all the funding increments in an HA program

are listed in one consolidated contractual document called the consolidated annual contributions contract (consolidated ACC). A single consolidated ACC covers funding for the HA certificate program and voucher program.

(b) *Budget authority and contract authority.* (1) Budget authority is the maximum amount that may be paid by HUD to an HA over the ACC term of a funding increment. Contract authority is the maximum annual payment for the funding increment. Budget authority for a funding increment is equal to contract authority times the number of years in the increment term. Before adding a funding increment to the consolidated ACC for an HA program, HUD reserves budget authority from amounts authorized and appropriated by the Congress for the program.

(2) For each funding increment, the ACC specifies the initial term over which HUD will make payments for the HA program, and the contract authority and budget authority for the funding increment. For a given HA fiscal year, the amount of HUD's maximum annual payment for the HA program equals the sum of the contract authority for all of the funding increments under the consolidated ACC. However, this maximum amount does not include contract authority for an expired funding increment. If the term of a funding increment expires during the HA fiscal year, this maximum amount only includes the pro-rata portion of contract authority for the portion of the HA fiscal year prior to expiration. (Additional payments may be made from the ACC reserve account described in § 982.154.) However, the amount to be paid must be approved by HUD, and may be less than the maximum payment.

§ 982.152 Administrative fee.

(a) *Purposes of administrative fee.* (1) HUD may approve administrative fees to the HA for any of the following purposes:

(i) Ongoing administrative fee;

(ii) Preliminary fee;

(iii) Cost to help families who experience difficulty renting appropriate housing;

(iv) Cost to coordinate supportive services for elderly and disabled families;

(v) Cost to coordinate supportive services for families participating in the family self-sufficiency (FSS) program;

(vi) Cost of audit by an independent public accountant; and

(vii) Other extraordinary costs determined necessary by HUD Headquarters.

(2) For each HA fiscal year, administrative fees are specified in the HA budget. The budget is submitted for HUD approval. Fees are paid in the amounts approved by HUD. Administrative fees may only be approved or paid from amounts appropriated by the Congress.

(b) *Ongoing administrative fee.* (1) The HA ongoing administrative fee is paid for each program unit under HAP contract on the first day of the month. The amount of the ongoing fee is established by HUD.

(2) If appropriations are available, HUD may pay a higher ongoing administrative fee for a small program or a program operating over a large geographic area. This higher fee level will not be approved unless the HA demonstrates that it is efficiently administering its tenant-based program, and that the higher ongoing administrative fee is reasonable and necessary for administration of the program in accordance with HUD requirements.

(3) HUD may pay a lower ongoing administrative fee for HA-owned units.

(c) *Preliminary fee.* (1) A preliminary fee is paid by HUD for each new unit added to the HA program. The preliminary fee is a one time fee for each new unit supported by a new funding increment. HUD establishes the maximum preliminary fee.

(2) The preliminary fee is used to cover expenses that the HA documents it has incurred to help families who inquire about or apply for the program, to lease up new units, or to pay for family self-sufficiency program activities.

(d) *Reducing HA administrative fee.* HUD may reduce or offset any administrative fee to the HA, in the amount determined by HUD, if the HA fails to perform HA administrative responsibilities correctly or adequately under the program (for example, HA failure to enforce HQS requirements; or to reimburse a receiving HA promptly under portability procedures).

§ 982.153 HA responsibilities.

(a) The HA must comply with the consolidated ACC, the application, HUD regulations and other requirements, and the HA administrative plan.

(b) In administering the program, the HA must:

(1) Publish and disseminate information about the availability and nature of housing assistance under the program;

(2) Explain the program to owners and families;

(3) Seek expanded opportunities for assisted families to locate housing outside areas of poverty or racial concentration;

(4) Encourage owners to make units available for leasing in the program, including owners of suitable units located outside areas of poverty or racial concentration;

(5) Affirmatively further fair housing goals and comply with equal opportunity requirements;

(6) Make efforts to help disabled persons find satisfactory housing;

(7) Receive applications from families, determine eligibility, maintain the waiting list, select applicants, issue a voucher or certificate to each selected family, provide housing information to families selected;

(8) Determine who can live in the assisted unit, at admission and during the family's participation in the program;

(9) Obtain and verify evidence of citizenship and eligible immigration status in accordance with 24 CFR part 812;

(10) Review the family's request for approval of the unit and lease;

(11) Inspect the unit before assisted occupancy and at least annually during the assisted tenancy;

(12) Determine the amount of the housing assistance payment for a family;

(13) Determine the maximum rent to the owner, and whether the rent is reasonable;

(14) Make timely housing assistance payments to an owner in accordance with the HAP contract;

(15) Examine family income, size and composition, at admission and during the family's participation in the program. The examination includes verification of income and other family information;

(16) Establish and adjust HA utility allowance;

(17) Administer and enforce the housing assistance payments contract with an owner, including taking appropriate action, as determined by the HA, if the owner defaults (e.g., HQS violation);

(18) Determine whether to terminate assistance to a participant family for violation of family obligations;

(19) Conduct informal reviews of certain HA decisions concerning applicants for participation in the program;

(20) Conduct informal hearings on certain HA decisions concerning participant families;

(21) Provide sound financial management of the program, including engaging an independent public accountant to conduct audits; and

(22) Administer an FSS program (if applicable).

§ 982.154 ACC reserve account.

(a)(1) HUD establishes an unfunded reserve account, called the ACC reserve account (formerly ''project reserve''), for the HA's program. There are separate ACC reserve accounts for the HA's certificate and voucher programs. The ACC reserve account is established and maintained in the amount determined by HUD.

(2) At the end of each HA fiscal year, HUD credits the ACC reserve account from the amount by which the sum of contract authority for all funding increments under the consolidated ACC (maximum annual payment) exceeds the amount actually approved and paid for the HA fiscal year. However, the maximum annual payment does not include contract authority for an expired funding increment. If the term of a funding increment expires during the HA fiscal year, this maximum amount only includes the pro-rata portion of contract authority for the funding increment covering the portion of the HA fiscal year prior to expiration.

(b) HUD may approve additional payments for the HA program from available amounts in the ACC reserve account.

§ 982.155 Administrative fee reserve.

(a) The HA must maintain an administrative fee reserve (formerly ''operating reserve'') for the program. There are separate administrative fee reserve accounts for the HA's certificate and voucher programs. The HA must credit to the administrative fee reserve the total of:

(1) The amount by which program administrative fees paid by HUD for an HA fiscal year exceed the HA program administrative expenses for the fiscal year; plus

(2) Interest earned on the administrative fee reserve.

(b)(1) The HA must use funds in the administrative fee reserve to pay program administrative expenses in excess of administrative fees paid by HUD for an HA fiscal year. If funds in the administrative fee reserve are not needed to cover HA administrative expenses (to the end of the last expiring funding increment under the consolidated ACC), the HA may use these funds for other housing purposes permitted by State and local law. However, HUD may prohibit use of the funds for certain purposes.

(2) The HA Board of Commissioners or other authorized officials must establish the maximum amount that may be charged against the administrative fee reserve without specific approval.

(3) If the HA has not adequately administered any Section 8 program, HUD may prohibit use of funds in the administrative fee reserve, and may direct the HA to use funds in the reserve to improve administration of the program or to reimburse ineligible expenses.

§ 982.156 Depositary for program funds.

(a) Unless otherwise required or permitted by HUD, all program receipts must be promptly deposited with a financial institution selected as depositary by the HA in accordance with HUD requirements.

(b) The HA may only withdraw deposited program receipts for use in connection with the program in accordance with HUD requirements.

(c) The HA must enter into an agreement with the depositary in the form required by HUD.

(d)(1) If required under a written freeze notice from HUD to the depositary:

(i) The depositary may not permit any withdrawal by the HA of funds held under the depositary agreement unless expressly authorized by written notice from HUD to the depositary; and

(ii) The depositary must permit withdrawals of such funds by HUD.

(2) HUD must send the HA a copy of the freeze notice from HUD to the depositary.

§ 982.157 Budget and expenditure.

(a) *Budget submission.* Each HA fiscal year, the HA must submit its proposed budget for the program to HUD for approval at such time and in such form as required by HUD.

(b) *HA use of program receipts.* (1) HUD payments under the consolidated ACC, and any other amounts received by the HA in connection with the program, must be used in accordance with the HA HUD-approved budget. Such HUD payments and other receipts may only be used for:

(i) Housing assistance payments; and

(ii) HA administrative fees.

(2) The HA must maintain a system to ensure that the HA will be able to make housing assistance payments for all participants within the amounts contracted under the consolidated ACC.

§ 982.158 Program accounts and records.

(a) The HA must maintain complete and accurate accounts and other records for the program in accordance with HUD requirements, in a manner that permits a speedy and effective audit. The records must be in the form required by HUD, including requirements governing computerized or electronic forms of record-keeping.

(b) The HA must furnish to HUD accounts and other records, reports, documents and information, as required by HUD. For provisions on electronic transmission of required family data, see 24 CFR part 908.

(c) HUD and the Comptroller General of the United States shall have full and free access to all HA offices and facilities, and to all accounts and other records of the HA that are pertinent to administration of the program, including the right to examine or audit the records, and to make copies. The HA must grant such access to computerized or other electronic records, and to any computers, equipment or facilities containing such records, and shall provide any information or assistance needed to access the records.

(d) The HA must prepare a report of every unit inspection required under this rule. Each report must specify:

(1) Any defects or deficiencies in the unit that must be corrected to meet the HQS; and

(2) Other defects or deficiencies observed by the HA inspector (for use if the owner later claims that the defects or deficiencies were caused by the family).

(e) During the term of each assisted lease, and for at least three years thereafter, the HA must keep:

(1) A copy of the executed lease;

(2) The HAP contract; and

(3) The application from the family.

(f) The HA must keep the following records for at least three years:

(1) Records that provide income, racial, ethnic, gender, and disability status data on program applicants and participants;

(2) An application from each ineligible family and notice that the applicant is not eligible;

(3) HUD-required reports.;

(4) Unit inspection reports;

(5) Lead-based paint inspection records (as required by § 982.401(j));

(6) Accounts and other records supporting HA budget and financial statements for the program; and

(7) Other records specified by HUD.

§ 982.159 Audit requirements.

(a) The HA must engage and pay an independent public accountant to conduct audits in accordance with HUD requirements.

(b) The HA is subject to the audit requirements in 24 CFR part 44.

§ 982.160 HUD determination to administer a local program.

If the Assistant Secretary for Public and Indian Housing determines that there is no HA organized, or that there is no HA able and willing to implement

the provisions of this part for an area, HUD (or an entity acting on behalf of HUD) may enter into HAP contracts with owners and perform the functions otherwise assigned to HAs under this part with respect to the area.

§ 982.161 Conflict of interest.

(a) Neither the HA nor any of its contractors or subcontractors may enter into any contract or arrangement in connection with the tenant-based programs in which any of the following classes of persons has any interest, direct or indirect, during tenure or for one year thereafter:

(1) Any present or former member or officer of the HA (except a participant commissioner);

(2) Any employee of the HA, or any contractor, subcontractor or agent of the HA, who formulates policy or who influences decisions with respect to the programs;

(3) Any public official, member of a governing body, or State or local legislator, who exercises functions or responsibilities with respect to the programs; or

(4) Any member of the Congress of the United States.

(b) Any member of the classes described in paragraph (a) of this section must disclose their interest or prospective interest to the HA and HUD.

(c) The conflict of interest prohibition under this section may be waived by the HUD field office for good cause.

§ 982.162 Use of HUD-required contracts and other forms.

(a) The HA must use program contracts and other forms required by HUD headquarters, including:

(1) The consolidated ACC between HUD and the HA;

(2) The HAP contract between the HA and the owner; and

(3) The lease language required by HUD (in the lease between the owner and the tenant).

(b) Required program contracts and other forms must be word-for-word in the form required by HUD headquarters. Any additions to or modifications of required program contracts or other forms must be approved by HUD headquarters.

§ 982 Fraud recoveries.

Under 24 CFR part 792, the HA may retain a portion of program fraud losses that the HA recovers from a family or owner by litigation, court-order or a repayment agreement.

* * * * *

Subpart F—[Reserved]

Subpart G—Leasing a Unit

§ 982.301 Information when family is selected.

(a) *HA briefing of family.* (1) When the HA selects a family to participate in a tenant-based program, the HA must give the family an oral briefing. The briefing must include information on the following subjects:

(i) A description of how the program works;

(ii) Family and owner responsibilities; and

(iii) Where the family may lease a unit, including renting a dwelling unit inside or outside the HA jurisdiction.

(2) For a family that qualifies to lease a unit outside the HA jurisdiction under portability procedures, the briefing must include an explanation of how portability works. The HA may not discourage the family from choosing to live anywhere in the HA jurisdiction, or outside the HA jurisdiction under portability procedures.

(3) If the family is currently living in a high poverty census tract in the HA's jurisdiction, the briefing must also explain the advantages of moving to an area that does not have a high concentration of poor families.

(4) In briefing a family that includes any disabled person, the HA must take appropriate steps to ensure effective communication in accordance with 24 CFR 8.6.

(b) *Information packet.* When a family is selected to participate in the program, the HA must give the family a packet that includes information on the following subjects:

(1) The term of the certificate or voucher, and HA policy on any extensions or suspensions of the term. If the HA allows extensions, the packet must explain how the family can request an extension;

(2)(i) How the HA determines the housing assistance payment for a family;

(ii) For the certificate program, information on fair market rents and the HA utility allowance schedule;

(iii) For the voucher program, information on the payment standard and the HA utility allowance schedule;

(3) How the HA determines the maximum rent for an assisted unit;

(4) What the family should consider in deciding whether to lease a unit, including:

(i) The condition of a unit;

(ii) Whether the rent is reasonable;

(iii) The cost of any tenant-paid utilities and whether the unit is energy-efficient; and

(iv) The location of the unit, including proximity to public transportation, centers of employment, schools and shopping;

(5) Where the family may lease a unit. For a family that qualifies to lease a unit outside the HA jurisdiction under portability procedures, the information packet must include an explanation of how portability works;

(6) The HUD-required ''lease addendum''. The lease addendum is the language that must be included in the lease;

(7) The form of request for lease approval, and an explanation of how to request HA approval to lease a unit;

(8) A statement of the HA policy on providing information about a family to prospective owners;

(9) HA subsidy standards, including when the HA will consider granting exceptions to the standards;

(10) The HUD brochure on how to select a unit;

(11) The HUD lead-based paint (LBP) brochure;

(12) Information on federal, State and local equal opportunity laws, and a copy of the housing discrimination complaint form;

(13) A list of landlords or other parties known to the HA who may be willing to lease a unit to the family, or help the family find a unit;

(14) Notice that if the family includes a disabled person, the family may request a current listing of accessible units known to the HA that may be available;

(15) Family obligations under the program;

(16) The grounds on which the HA may terminate assistance for a participant family because of family action or failure to act; and

(17) HA informal hearing procedures. This information must describe when the HA is required to give a participant family the opportunity for an informal hearing, and how to request a hearing.

§ 982.302 Issuance of certificate or voucher; Requesting HA approval to lease a unit.

(a) When a family is selected, the HA issues a certificate or voucher to the family. The family may search for a unit.

(b) If the family finds a unit, and the owner is willing to lease the unit under the program, the family may request HA approval to lease the unit. The HA has the discretion to permit a family to submit more than one request at a time.

(c) The family must submit to the HA a request for lease approval and a copy of the proposed lease. Both documents must be submitted during the term of the certificate or voucher.

(d) The HA specifies the procedure for requesting approval to lease a unit. The

family must submit the request for lease approval in the form and manner required by the HA.

§ 982.303 Term of certificate or voucher.

(a) *Initial term.* The initial term of a certificate or voucher must be at least 60 calendar days. The initial term must be stated on the certificate or voucher.

(b) *Extensions of term.* (1) At its discretion the HA may grant a family one or more extensions of the initial term in accordance with HA policy as described in the HA administrative plan. The initial term plus any extensions may not exceed a total period of 120 calendar days from the beginning of the initial term. Any extension of the term is granted by HA notice to the family.

(2) If a member of the family is a disabled person, and the family needs an extension because of the disability, the HA must consider whether to grant a request to extend the term of the certificate or voucher (up to the maximum extension allowed under paragraph (b)(1) of this section) as a reasonable accommodation.

(c) *Suspension of term.* The HA policy may or may not provide for suspension of the initial or any extended term of the certificate or voucher. At its discretion, and in accordance with HA policy as described in the HA administrative plan, the HA may grant a family a suspension of the certificate or voucher term if the family has submitted a request for lease approval during the term of the certificate or voucher. (§ 982.4 (definition of ''suspension''); § 982.54(d)(2)) The HA may grant a suspension for any part of the period after the family has submitted a request for lease approval up to the time when the HA approves or denies the request.

(d) *Progress report by family to the HA.* During the initial or any extended term of a certificate or voucher, the HA may require the family to report progress in leasing a unit. Such reports may be required at such intervals or times as determined by the HA.

§ 982.304 Illegal discrimination: HA assistance to family.

A family may claim that illegal discrimination because of race, color, religion, sex, national origin, age, familial status or disability prevents the family from finding or leasing a suitable unit with assistance under the program. The HA must give the family information on how to fill out and file a housing discrimination complaint.

§ 982.305 HA approval to lease a unit.

(a) *Program requirements.* The HA may not give approval for the family to lease a dwelling unit, or execute a HAP contract, until the HA has determined that all the following meet program requirements:

(1) The unit is eligible;

(2) The unit has been inspected by the HA and passes HQS;

(3) The lease is approvable and includes the lease addendum;

(4) The rent to owner is reasonable; and

(5) For a unit leased under the certificate program, the total of contract rent plus any utility allowance does not exceed the FMR/exception rent limit.

(b) *Actions before lease term.* All of the following must always be completed before the beginning of the lease term:

(1) The HA has inspected the unit, and has determined that the unit satisfies the HQS;

(2) The landlord and the tenant have executed the lease; and

(3) The HA has approved leasing of the unit in accordance with program requirements.

(c) *When HAP contract is executed.* (1) The HA must use best efforts to execute the HAP contract before the beginning of the lease term. The HAP contract must be executed no later than 60 calendar days from the beginning of the lease term.

(2) The HA may not pay any housing assistance payment to the owner until the HAP contract has been executed.

(3) If the HAP contract is executed during the period of 60 calendar days from the beginning of the lease term, the HA will pay housing assistance payments after execution of the HAP contract (in accordance with the terms of the HAP contract), to cover the portion of the lease term before execution of the HAP contract (a maximum of 60 days).

(4) Any HAP contract executed after the 60 day period is void, and the HA may not pay any housing assistance payment to the owner.

(d) *Notice to family and owner.* After receiving the family's request for approval to lease a unit, the HA must promptly notify the family and owner whether the assisted tenancy is approved.

(e) *Procedure after HA approval.* If the HA has given approval for the family to lease the unit, the owner and the HA execute the HAP contract.

§ 982.306 HA disapproval of owner.

(a) The HA must not approve a unit if the HA has been informed (by HUD or otherwise) that the owner is debarred, suspended, or subject to a limited denial of participation under 24 CFR part 24.

(b) When directed by HUD, the HA must not approve a unit if:

(1) The federal government has instituted an administrative or judicial action against the owner for violation of the Fair Housing Act or other federal equal opportunity requirements, and such action is pending; or

(2) A court or administrative agency has determined that the owner violated the Fair Housing Act or other federal equal opportunity requirements.

(c) In its administrative discretion, the HA may deny approval to lease a unit from an owner for any of the following reasons:

(1) The owner has violated obligations under a housing assistance payments contract under Section 8 of the 1937 Act (42 U.S.C. 1437f);

(2) The owner has committed fraud, bribery or any other corrupt or criminal act in connection with any federal housing program;

(3) The owner has engaged in drug-trafficking;

(4) The owner has a history or practice of non-compliance with the HQS for units leased under the tenant-based programs, or with applicable housing standards for units leased with project-based Section 8 assistance or leased under any other federal housing program;

(5) The owner has a history or practice of renting units that fail to meet State or local housing codes; or

(6) The owner has not paid State or local real estate taxes, fines or assessments.

(d) Nothing in this rule is intended to give any owner any right to participate in the program.

(e) For purposes of this section, ''owner'' includes a principal or other interested party.

§ 982.307 Owner responsibility for screening tenants.

(a) *Owner screening.* (1) Listing a family on the HA waiting list, or selecting a family for participation in the program, is not a representation by the HA to the owner about the family's expected behavior, or the family's suitability for tenancy. At or before HA approval to lease a unit, the HA must inform the owner that the HA has not screened the family's behavior or suitability for tenancy and that such screening is the owner's own responsibility.

(2) Owners are permitted and encouraged to screen families on the basis of their tenancy histories. An owner may consider a family's background with respect to such factors as:

(i) Payment of rent and utility bills;

(ii) Caring for a unit and premises;

(iii) Respecting the rights of others to the peaceful enjoyment of their housing;

(iv) Drug-related criminal activity or other criminal activity that is a threat to the life, safety or property of others; and

(v) Compliance with other essential conditions of tenancy.

(b) *HA information about tenant.* (1) The HA must give the owner:

(i) The family's current address (as shown in the HA records); and

(ii) The name and address (if known to the HA) of the landlord at the family's current and prior address.

(2) When a family wants to lease a dwelling unit, the HA may offer the owner other information in the HA possession, about the family, including information about the tenancy history of family members, or about drug-trafficking by family members.

(3) The HA must give the family a statement of the HA policy on providing information to owners. The statement must be included in the information packet that is given to a family selected to participate in the program. The HA policy must provide that the HA will give the same types of information to all families and to all owners.

§ 982.308 Lease.

(a) *Tenant's legal capacity to enter lease.* The tenant must have legal capacity to enter into a lease under State or local law.

(b) *HA approval of lease.* The assisted lease between the tenant and owner (including any new lease or lease revision) must be approved by the HA. Before approving the lease or revision, the HA must determine that the lease meets the requirements of this section.

(c) *Required lease provisions.* (1) ''Lease addendum'' means the lease language required by HUD.

(2) The lease must include word-for-word all provisions of the lease addendum (e.g., by adding the lease addendum to the form of lease used by the owner for unassisted tenants). However, the HA may not require families and owners to use a model program lease.

(3) If there is any conflict between the lease addendum and any other provisions of the lease, the provisions required by HUD shall control.

(d) *Prohibited lease provisions.* The lease addendum must state that the following types of lease provisions are prohibited:

(1) *Agreement to be sued.* Agreement by the tenant to be sued, to admit guilt, or to a judgment in favor of the owner, in a lawsuit brought in connection with the lease.

(2) *Treatment of personal property.* Agreement by the tenant that the owner may take, hold, or sell personal property of household members without notice to the tenant, and a court decision on the rights of the parties. This prohibition, however, does not apply to an agreement by the tenant concerning disposition of personal property left in the dwelling unit after the tenant has moved out. The owner may dispose of this personal property in accordance with State and local law.

(3) *Excusing owner from responsibility.* Agreement by the tenant not to hold the owner or the owner's agent legally responsible for any action or failure to act, whether intentional or negligent.

(4) *Waiver of notice.* Agreement by the tenant that the owner may bring a lawsuit against the tenant without notice to the tenant.

(5) *Waiver of legal proceedings.* Agreement by the tenant that the owner may evict the tenant or household members without instituting a civil court proceeding in which the tenant has the opportunity to present a defense, or before a court decision on the rights of the parties.

(6) *Waiver of a jury trial.* Agreement by the tenant to waive any right to a trial by jury.

(7) *Waiver of right to appeal court decision.* Agreement by the tenant to waive any right to appeal, or to otherwise challenge in court, a court decision in connection with the lease.

(8) *Tenant chargeable with cost of legal actions regardless of outcome.* Agreement by the tenant to pay the owner's attorney's fees or other legal costs even if the tenant wins in a court proceeding by the owner against the tenant. However, the tenant may be obligated to pay costs if the tenant loses.

(e) *Utilities and appliances.* The lease must specify what utilities and appliances are to be supplied by the owner, and what utilities and appliances are to be supplied by the family.

(f) *State or local law.* The HA may review the lease to determine if the lease complies with State or local law. The HA may decline to approve the lease if the HA determines that the lease does not comply with State or local law.

§ 982.309 Term of assisted tenancy.

(a) *Term of HAP contract.* (1) The term of the HAP contract begins on the first day of the term of the lease and ends on the last day of the term of the lease.

(2) The HAP contract terminates if the lease terminates.

(b) *Term of lease.* (1) The initial term of the lease must be for at least one year.

(2) The lease must provide for automatic renewal after the initial term of the lease. The lease may provide either:

(i) For automatic renewal for successive definite terms (e.g., month-to-month or year-to-year); or

(ii) For automatic indefinite extension of the lease term.

(3) The term of the lease terminates if any of the following occurs:

(i) The owner terminates the lease;

(ii) The tenant terminates the lease;

(iii) The owner and the tenant agree to terminate the lease;

(iv) The HA terminates the HAP contract; or

(v) The HA terminates assistance for the family.

(c) *Relation of lease to ACC.* The HA may approve the lease, and execute the HAP contract, even if there is less than one year remaining from the beginning of the lease term to the end of the last expiring funding increment under the consolidated ACC.

(d) *Lease termination by the family.* (1) The family may terminate the lease at any time after the first year. The lease may not require the family to give more than 60 calendar days notice of such termination to the owner.

(2) If the family terminates the lease on notice to the owner, the family must give the HA a copy of the notice of termination at the same time. Failure to do this is a breach of family obligations under the program.

(e) *New lease or revision.* (1) Any new lease or lease revision must be approved in advance by the HA. The new lease or revision must meet the requirements of this section. The HA and owner must enter a new HAP contract for the tenancy under the new or revised lease.

(2) The owner may offer the family a new lease, for a term beginning at any time after the initial term. The owner must give the tenant written notice of the offer, with a copy to the HA, at least 60 calendar days before the proposed beginning date of the new lease term. The offer must specify a reasonable time limit for acceptance by the family.

(f) *Move from unit.* The family must notify the HA and the owner before the family moves out of the unit. Failure to do this is a breach of family obligations under the program.

§ 982.310 Owner termination of tenancy.

(a) *Grounds.* During the term of the lease, the owner may not terminate the tenancy except on the following grounds:

(1) Serious or repeated violation of the terms and conditions of the lease;

(2) Violation of federal, State, or local law that imposes obligations on the tenant in connection with the occupancy or use of the premises; or

(3) Other good cause.

(b) *Nonpayment by HA: Not grounds for termination of tenancy.* (1) The family is not responsible for payment of the portion of the rent to owner covered by the housing assistance payment under the HAP contract between the owner and the HA.

(2) The HA failure to pay the housing assistance payment to the owner is not a violation of the lease between the tenant and the owner. During the term of the lease the owner may not terminate the tenancy of the family for nonpayment of the HA housing assistance payment.

(c) *Criminal activity.* Any of the following types of criminal activity by the tenant, any member of the household, a guest or another person under the tenant's control shall be cause for termination of tenancy:

(1) Any criminal activity that threatens the health, safety or right to peaceful enjoyment of the premises by other residents;

(2) Any criminal activity that threatens the health, safety or right to peaceful enjoyment of their residences by persons residing in the immediate vicinity of the premises; or

(3) Any drug-related criminal activity on or near the premises.

(d) *Other good cause.* (1) ''Other good cause'' for termination of tenancy by the owner may include, but is not limited to, any of the following examples:

(i) Failure by the family to accept the offer of a new lease or revision;

(ii) A family history of disturbance of neighbors or destruction of property, or of living or housekeeping habits resulting in damage to the unit or premises;

(iii) The owner's desire to use the unit for personal or family use, or for a purpose other than as a residential rental unit; or

(iv) A business or economic reason for termination of the tenancy (such as sale of the property, renovation of the unit, desire to lease the unit at a higher rental). (For statutory 90 day notice requirement if the owner is terminating the tenancy for a business or economic reason, see § 982.455.)

(2) During the first year of the lease term, the owner may not terminate the tenancy for ''other good cause'', unless the owner is terminating the tenancy because of something the family did or failed to do. For example, during this period, the owner may not terminate the tenancy for ''other good cause'' based on any of the following grounds: failure by the family to accept the offer of a new lease or revision; the owner's desire to use the unit for personal or family use, or for a purpose other than as a residential rental unit; or a business or economic reason for termination of the tenancy (see paragraph (d)(1)(iv) of this section).

(e) *Owner notice.*—(1) *Notice of grounds.* (i) The owner must give the tenant a written notice that specifies the grounds for termination of tenancy. The notice of grounds must be given at or before commencement of the eviction action.

(ii) The notice of grounds may be included in, or may be combined with, any owner eviction notice to the tenant.

(2) *Eviction notice.* (i) Owner eviction notice means a notice to vacate, or a complaint or other initial pleading used under State or local law to commence an eviction action.

(ii) The owner must give the HA a copy of any owner eviction notice to the tenant.

(3) *90 day notice: HAP contract termination.* The owner must give 90 calendar days notice of HAP contract termination (to HUD, the HA and the family) in accordance with § 982.455 in the following cases:

(i) If the owner terminates the tenancy for other good cause that is a business or economic reason; or

(ii) At ''expiration'' of the HAP contract. (''Expiration'' for this purpose is defined at § 982.455(b)(2)(iii).)

(f) *Eviction by court action.* The owner may only evict the tenant from the unit by instituting a court action.

(g) *Regulations not applicable.* 24 CFR part 247 (concerning evictions from certain subsidized and HUD-owned projects) does not apply to a tenancy assisted under this part 982.

§ 982.311 When assistance is paid.

(a) *Payments under HAP contract.* Housing assistance payments are paid to the owner in accordance with the terms of the HAP contract. Housing assistance payments may only be paid to the owner during the lease term, and while the family is residing in the unit.

(b) *Termination of payment: When owner terminates the lease.* Housing assistance payments terminate when the lease is terminated by the owner in accordance with the lease. However, if the owner has commenced the process to evict the tenant, and if the family continues to reside in the unit, the HA must continue to make housing assistance payments to the owner in accordance with the HAP contract until the owner has obtained a court judgment or other process allowing the owner to evict the tenant. The HA may continue such payments until the family moves from or is evicted from the unit.

(c) *Termination of payment: Other reasons for termination.* Housing assistance payments terminate if:

(1) The lease terminates;

(2) The HAP contract terminates; or

(3) The HA terminates assistance for the family.

(d) *Family move-out.* (1) If the family moves out of the unit, the HA may not make any housing assistance payment to the owner for any month after the month when the family moves out. The owner may keep the housing assistance payment for the month when the family moves out of the unit.

(2) If a participant family moves from an assisted unit with continued tenant-based assistance, the term of the assisted lease for the new assisted unit may begin during the month the family moves out of the first assisted unit. Overlap of the last housing assistance payment (for the month when the family moves out of the old unit) and the first assistance payment for the new unit, is not considered to constitute a duplicative housing subsidy.

§ 982.312 Absence from unit.

(a) The family may be absent from the unit for brief periods. For longer absences, the HA administrative plan establishes the HA policy on how long the family may be absent from the assisted unit. However, the family may not be absent from the unit for a period of more than 180 consecutive calendar days in any circumstance, or for any reason. At its discretion, the HA may allow absence for a lesser period in accordance with HA policy.

(b) Housing assistance payments terminate if the family is absent for longer than the maximum period permitted. The term of the HAP contract and assisted lease also terminate.

(The owner must reimburse the HA for any housing assistance payment for the period after the termination.)

(c) Absence means that no member of the family is residing in the unit.

(d)(1) The family must supply any information or certification requested by the HA to verify that the family is residing in the unit, or relating to family absence from the unit. The family must cooperate with the HA for this purpose. The family must promptly notify the HA of absence from the unit, including any information requested on the purposes of family absences.

(2) The HA may adopt appropriate techniques to verify family occupancy or absence, including letters to the family at the unit, phone calls, visits or questions to the landlord or neighbors.

(e) The HA administrative plan must state the HA policies on family absence

from the dwelling unit. The HA absence policy includes:

(1) How the HA determines whether or when the family may be absent, and for how long. For example, the HA may establish policies on absences because of vacation, hospitalization or imprisonment; and

(2) Any provision for resumption of assistance after an absence, including readmission or resumption of assistance to the family.

§ 982.313 Security deposit: Amounts owed by tenant.

(a) The owner may collect a security deposit from the tenant.

(b) The HA may prohibit security deposits in excess of private market practice, or in excess of amounts charged by the owner to unassisted tenants.

(c) When the tenant moves out of the dwelling unit, the owner, subject to State or local law, may use the security deposit, including any interest on the deposit, in accordance with the lease, as reimbursement for any unpaid rent payable by the tenant, damages to the unit or for other amounts the tenant owes under the lease.

(d) The owner must give the tenant a written list of all items charged against the security deposit, and the amount of each item. After deducting the amount, if any, used to reimburse the owner, the owner must refund promptly the full amount of the unused balance to the tenant.

(e) If the security deposit is not sufficient to cover amounts the tenant owes under the lease, the owner may seek to collect the balance from the tenant.

§ 982.314 Move with continued tenant-based assistance.

(a) *Applicability.* This section states when a participant family may move to a new unit with continued tenant-based assistance:

(b) *When family may move.* A family may move to a new unit if:

(1) The assisted lease for the old unit has terminated. This includes a termination because:

(i) The HA has terminated the HAP contract for the owner's breach; or

(ii) The lease has terminated by mutual agreement of the owner and the tenant.

(2) The owner has given the tenant a notice to vacate, or has commenced an action to evict the tenant, or has obtained a court judgment or other process allowing the owner to evict the tenant.

(3) The tenant has given notice of lease termination (if the tenant has a right to terminate the lease on notice to the owner, for owner breach or otherwise).

(c) *How many moves.* (1) A participant family may move one or more times with continued assistance under the program, either inside the HA jurisdiction, or under the portability procedures. (See § 982.353)

(2) The HA may establish:

(i) Policies that prohibit any move by the family during the initial year of assisted occupancy; and

(ii) Policies that prohibit more than one move by the family during any one year period.

(3) The HA policies may apply to moves within the HA jurisdiction by a participant family, and to moves by a participant family outside the HA jurisdiction under portability procedures.

(d) *Notice that family wants to move.* (1) If the family terminates the lease on notice to the owner, the family must give the HA a copy of the notice at the same time.

(2) If the family wants to move to a new unit, the family must notify the HA and the owner before moving from the old unit. If the family wants to move to a new unit that is located outside the initial HA jurisdiction, the notice to the initial HA must specify the area where the family wants to move. See portability procedures in subpart H of this part.

(e) *When HA may deny permission to move.* (1) The HA may deny permission to move if the HA does not have sufficient funding for continued assistance.

(2) At any time, the HA may deny permission to move in accordance with § 982.552 (grounds for denial or termination of assistance).

§ 982.315 Family break-up.

(a) The HA has discretion to determine which members of an assisted family continue to receive assistance in the program if the family breaks up. The HA administrative plan must state HA policies on how to decide who remains in the program if the family breaks up.

(b) The factors to be considered in making this decision under the HA policy may include:

(1) Whether the assistance should remain with family members remaining in the original assisted unit.

(2) The interest of minor children or of ill, elderly or disabled family members.

(3) Whether family members are forced to leave the unit as a result or actual or threatened physical violence against family members by a spouse or other member of the household.

(4) Other factors specified by the HA.

(c) If a court determines the disposition of property between members of the assisted family in a divorce or separation under a settlement or judicial decree, the HA is bound by the court's determination of which family members continue to receive assistance in the program.

Subpart H—Where Family Can Live and Move

§ 982.351 Overview.

This subpart describes what kind of housing is eligible for leasing, and the areas where a family can live with tenant-based assistance. The subpart covers:

(a) Assistance for a family that rents a dwelling unit in the jurisdiction of the HA that originally selected the family for tenant-based assistance.

(b) ''Portability'' assistance for a family that rents a unit outside the jurisdiction of the initial HA.

§ 982.352 Eligible housing.

(a) *Ineligible housing.* The following types of housing may not be assisted by an HA in the tenant-based programs:

(1) A public housing or Indian housing unit;

(2) A unit receiving project-based assistance under section 8 of the 1937 Act (42 U.S.C. 1437f);

(3) Nursing homes, board and care homes, or facilities providing continual psychiatric, medical, or nursing services;

(4) College or other school dormitories;

(5) Units on the grounds of penal, reformatory, medical, mental, and similar public or private institutions;

(6) A unit occupied by its owner or by a person with any interest in the dwelling unit. (However, assistance may be provided for a family residing in a cooperative. In the certificate program, assistance may be provided to the owner of a manufactured home leasing a manufactured home space. In the case of shared housing, an owner unrelated to the assisted family may reside in the unit, but assistance may not be paid on behalf of the resident owner.); and

(7) For provisions on HA disapproval of an owner, see § 982.306.

(b) *HA-owned housing.* (1) A unit that is owned by the HA that administers the assistance under the consolidated ACC (including a unit owned by an entity substantially controlled by the HA) may only be assisted under the tenant-based program if:

(i) The family has been informed by the HA, both orally and in writing, that the family has the right to select any

eligible dwelling unit, and an HA-owned unit is freely selected by the family, without HA pressure or steering;

(ii) The unit is not ineligible housing;

(iii) During assisted occupancy, the family does not benefit from any form of housing subsidy prohibited under paragraph (c) of this section;

(iv) The initial contract rent (for a certificate program unit) and the initial rent to owner (for a voucher program unit) has been approved by HUD before execution of the HAP contract and commencement of the assisted lease term; and

(v) Any adjustment of the contract rent (for a certificate program unit) and any changes in the rent to owner (for a voucher program unit) is approved in advance by HUD.

(2) The HA as owner is subject to the same program requirements that apply to other owners in the program.

(c) *Prohibition against other housing subsidy.* A family may not receive the benefit of tenant-based assistance while receiving the benefit of any of the following forms of other housing subsidy, for the same unit or for a different unit:

(1) Public or Indian housing assistance;

(2) Other Section 8 assistance (including other tenant-based assistance);

(3) Assistance under former Section 23 of the United States Housing Act of 1937 (before amendment by the Housing and Community Development Act of 1974);

(4) Section 101 rent supplements;

(5) Section 236 rental assistance payments;

(6) Tenant-based assistance under the HOME Program;

(7) Rental assistance payments under Section 521 of the Housing Act of 1949 (a Farmers Home Administration program);

(8) Any local or State rent subsidy; or

(9) Any other duplicative federal, State, or local housing subsidy, as determined by HUD. For this purpose, ''housing subsidy'' does not include the housing component of a welfare payment, a social security payment received by the family, or a rent reduction because of a tax credit.

§ 982.353 Where family can lease a unit with tenant-based assistance.

(a) *Assistance in the initial HA jurisdiction.* The family may receive tenant-based assistance to lease a unit located anywhere in the jurisdiction (as determined by State and local law) of the initial HA.

(b) *Portability: Assistance outside the initial HA jurisdiction.* Except as provided in paragraph (c) of this section, the family may receive tenant-based assistance to lease a unit outside the initial HA jurisdiction:

(1) In the same State as the initial HA;

(2) In the same metropolitan statistical area (MSA) as the initial HA, but in a different State;

(3) In an MSA that is next to the same MSA as the initial HA, but in a different State; or

(4) In the jurisdiction of an HA anywhere in the United States that is administering a tenant-based program.

(c) *Nonresident applicants.* (1) This paragraph (c) applies if neither the household head or spouse of an assisted family already had a ''domicile'' (legal residence) in the jurisdiction of the initial HA at the time when the family first submitted an application for participation in the program to the initial HA.

(2) During the 12 month period from the time when the family is admitted to the program, the family does not have any right to lease a unit outside the initial HA jurisdiction. During this period, the family may lease a unit located anywhere in the jurisdiction of the initial HA.

(3) If both the initial HA and a receiving HA agree, the family may lease a unit outside the HA jurisdiction under portability procedures.

(d) *Income eligibility.* (1) For admission to the certificate or voucher program, a family must be income eligible in the area where the family initially leases a unit with assistance in the certificate or voucher program.

(2) A portable family transferring between the certificate and voucher programs must be income-eligible for the new program in the area where the family leases an assisted unit. This requirement applies if the family is either:

(i) Transferring from the initial HA certificate program to the receiving HA voucher program; or

(ii) Transferring from the initial HA voucher program to the receiving HA certificate program.

(3) If a portable family was already a participant in the initial HA certificate or voucher program, income eligibility is not redetermined unless the family transfers between the programs.

(e) *Leasing in-place.* If the dwelling unit is approvable, a family may select the dwelling unit occupied by the family before selection for participation in the program.

(f) *Freedom of choice.* Except as provided in part 982 (e.g., prohibition on use of ineligible housing, housing not meeting HQS, or housing for which the contract rent (certificate program) or rent to owner (voucher program) exceeds a reasonable rent, the HA may not directly or indirectly reduce the family's opportunity to select among available units.

§ 982.354 Portability: Administration by initial HA outside the initial HA jurisdiction.

(a) When a family moves under portability (in accordance with § 982.353(b)) to an area outside the initial HA jurisdiction, the initial HA must administer assistance for the family if:

(1) The unit is located within the same State as the initial HA, in the same metropolitan statistical area (MSA) as the initial HA (but in a different State), or in an MSA that is next to the same MSA as the initial HA (but in a different State); and

(2) No other HA with a tenant-based program has jurisdiction in the area where the unit is located.

(b) In these conditions, the family remains in the program of the initial HA. The initial HA has the same responsibilities for administration of assistance for the family living outside the HA jurisdiction as for other families assisted by the HA, within the HA jurisdiction. For the purpose of permitting HA administration of program assistance for the family in the area outside of the HA jurisdiction as defined by State and local law (and thereby to satisfy the family's right to portability under federal law), the federal law and this regulation preempt limits on the HA jurisdiction under State and local law.

(c) The initial HA may choose to use another HA, a private management entity or other contractor or agent to help the initial HA administer assistance outside the HA jurisdiction as defined by State and local law.

§ 982.355 Portability: Administration by receiving HA.

(a) When a family moves under portability (in accordance with § 982.353(b)) to an area outside the initial HA jurisdiction, another HA (the ''receiving HA'') must administer assistance for the family if an HA with a tenant-based program has jurisdiction in the area where the unit is located.

(b)(1) In these conditions, an HA with jurisdiction in the area where the family wants to lease a unit must issue the family a certificate or voucher. If there is more than one such HA, the initial HA may choose the receiving HA.

(2) The receiving HA has the choice of assisting the family under either the certificate program or the voucher program. If the family was receiving assistance under the initial HA

certificate program, but is ineligible for admission to the voucher program, a receiving HA that administers a certificate program must provide continued assistance under the certificate program. If the family was receiving assistance under the initial HA voucher program, but is ineligible for admission to the certificate program, a receiving HA that administers a voucher program must provide continued assistance under the voucher program.

(c) *Portability procedures.* (1) The initial HA must determine whether the family is income-eligible in the area where the family wants to lease a unit.

(2) The initial HA must advise the family how to contact and request assistance from the receiving HA. The initial HA must promptly notify the receiving HA to expect the family.

(3) The family must promptly contact the receiving HA, and comply with receiving HA procedures for incoming portable families.

(4) The initial HA must give the receiving HA the most recent HUD Form 50058 (Family Report) for the family, and related verification information. If the receiving HA opts to conduct a new reexamination, the receiving HA may not delay issuing the family a voucher or certificate or otherwise delay approval of a unit unless the recertification is necessary to determine income eligibility.

(5) When the portable family requests assistance from the receiving HA, the receiving HA must promptly inform the initial HA whether the receiving HA will bill the initial HA for assistance on behalf of the portable family, or will absorb the family into its own program.

(6) The receiving HA must issue a certificate or voucher to the family. The term of the receiving HA certificate or voucher may not expire before the expiration date of any initial HA certificate or voucher. The receiving HA must determine whether to extend the certificate or voucher term. The family must submit a request for lease approval to the receiving HA during the term of the receiving HA certificate or voucher.

(7) The receiving HA must determine the family unit size for the portable family. The family unit size is determined in accordance with the subsidy standards of the receiving HA.

(8) The receiving HA must promptly notify the initial HA if the family has leased an eligible unit under the program, or if the family fails to submit a request for lease approval for an eligible unit within the term of the certificate or voucher.

(9) To provide tenant-based assistance for portable families, the receiving HA must perform all HA program functions, such as reexaminations of family income and composition. At any time, either the initial HA or the receiving HA may make a determination to deny or terminate assistance to the family in accordance with § 982.552.

(d) *Absorption by the receiving HA.* (1) If funding is available under the consolidated ACC for the receiving HA certificate or voucher program when the portable family is received, the receiving HA may absorb the family into the receiving HA certificate or voucher program. After absorption, the family is assisted with funds available under the consolidated ACC for the receiving HA tenant-based program.

(2) HUD may require that the receiving HA absorb all or a portion of the portable families.

(e) *Portability Billing.* (1) To cover assistance for a portable family, the receiving HA may bill the initial HA for housing assistance payments and administrative fees. This paragraph (e) describes the billing procedure.

(2) The initial HA must promptly reimburse the receiving HA for the full amount of the housing assistance payments made by the receiving HA for the portable family. The amount of the housing assistance payment for a portable family in the receiving HA program is determined in the same manner as for other families in the receiving HA program.

(3) The initial HA must promptly reimburse the receiving HA for 80 percent of the initial HA on-going administrative fee for each unit month that the family receives assistance under the tenant-based programs from the receiving HA.

(4) HUD may reduce the administrative fee to an initial HA, if the HA does not promptly reimburse the receiving HA for housing assistance payments or fees on behalf of portable families.

(5) In administration of portability, the initial HA and the receiving HA must comply with financial procedures required by HUD, including the use of HUD-required billing forms. The initial and receiving HA must comply with billing and payment deadlines under the financial procedures. HUD may assess penalties against an initial or receiving HA for violation, as determined by HUD, of HUD portability requirements.

(6) An HA must manage the HA tenant-based programs in a manner that ensures that the HA has the financial ability to provide assistance for families that move out of the HA program under the portability procedures that have not been absorbed by the receiving HA, as well as for families that remain in the HA program.

(7) When a portable family moves out of the tenant-based program of a receiving HA that has not absorbed the family, the HA in the new jurisdiction to which the family moves becomes the receiving HA, and the first receiving HA is no longer required to provide assistance for the family.

(f) *Portability funding.* (1) HUD may transfer funds for assistance to portable families to the receiving HA from funds available under the initial HA ACC.

(2) HUD may provide additional funding (e.g., funds for incremental units) to the initial HA for funds transferred to a receiving HA for portability purposes.

(3) HUD may provide additional funding (e.g., funds for incremental units) to the receiving HA for absorption of portable families.

(4) HUD may require the receiving HA to absorb portable families.

Subpart I—Dwelling Unit: Housing Quality Standards, Subsidy Standards, Inspection and Maintenance

§ 982.401 Housing quality standards (HQS).

(a) *Performance and acceptability requirements.* (1) This section states the housing quality standards (HQS) for housing assisted in the programs. Program housing must comply with the HQS, both at initial occupancy of the dwelling unit, and during the term of the assisted lease.

(2)(i) The HQS consist of:

(A) Performance requirements; and

(B) Acceptability criteria or HUD approved variations in the acceptability criteria.

(ii) This section states performance and acceptability criteria for these key aspects of housing quality:

(A) Sanitary facilities;

(B) Food preparation and refuse disposal;

(C) Space and security;

(D) Thermal environment;

(E) Illumination and electricity;

(F) Structure and materials;

(G) Interior air quality;

(H) Water supply;

(I) Lead-based paint;

(J) Access;

(K) Site and neighborhood;

(L) Sanitary condition; and

(M) Smoke detectors.

(3) All program housing must meet the HQS performance requirements both at commencement of assisted occupancy, and throughout the assisted tenancy.

(4)(i) In addition to meeting HQS performance requirements, the housing

must meet the acceptability criteria stated in this section, unless variations are approved by HUD.

(ii) HUD may grant approval for the HA to use acceptability criteria variations that are based on local codes or national standards that satisfy the purposes of the HQS.

(iii) HUD may approve acceptability criteria variations because of local climatic or geographic conditions.

(iv) HUD will not approve acceptability criteria variations that will unduly limit the amount and types of available rental housing stock.

(b) *Sanitary facilities.*—(1) *Performance requirements.* The dwelling unit must include sanitary facilities located in the unit. The sanitary facilities must be in proper operating condition, and adequate for personal cleanliness and the disposal of human waste. The sanitary facilities must be usable in privacy.

(2) *Acceptability criteria.* (i) The bathroom must be located in a separate private room and have a flush toilet in proper operating condition.

(ii) The dwelling unit must have a fixed basin in proper operating condition, with a sink trap and hot and cold running water.

(iii) The dwelling unit must have a shower or a tub in proper operating condition with hot and cold running water.

(iv) The facilities must utilize an approvable public or private disposal system (including a locally approvable septic system).

(c) *Food preparation and refuse disposal.*—(1) *Performance requirement.* (i) The dwelling unit must have suitable space and equipment to store, prepare, and serve foods in a sanitary manner.

(ii) There must be adequate facilities and services for the sanitary disposal of food wastes and refuse, including facilities for temporary storage where necessary (e.g, garbage cans).

(2) *Acceptability criteria.* (i) The dwelling unit must have an oven, and a stove or range, and a refrigerator of appropriate size for the family. All of the equipment must be in proper operating condition. The equipment may be supplied by either the owner or the family. A microwave oven may be substituted for a tenant-supplied oven and stove or range. A microwave oven may be substituted for an owner-supplied oven and stove or range if the tenant agrees and microwave ovens are furnished instead of an oven and stove or range to both subsidized and unsubsidized tenants in the building or premises.

(ii) The dwelling unit must have a kitchen sink in proper operating condition, with a sink trap and hot and cold running water. The sink must drain into an approvable public or private system.

(iii) The dwelling unit must have space for the storage, preparation, and serving of food.

(iv) There must be facilities and services for the sanitary disposal of food waste and refuse, including temporary storage facilities where necessary (e.g., garbage cans).

(d) *Space and security.—(1) Performance requirement.* The dwelling unit must provide adequate space and security for the family.

(2) *Acceptability criteria.* (i) At a minimum, the dwelling unit must have a living room, a kitchen area, and a bathroom.

(ii) The dwelling unit must have at least one bedroom or living/sleeping room for each two persons. Children of opposite sex, other than very young children, may not be required to occupy the same bedroom or living/sleeping room.

(iii) Dwelling unit windows that are accessible from the outside, such as basement, first floor, and fire escape windows, must be lockable (such as window units with sash pins or sash locks, and combination windows with latches). Windows that are nailed shut are acceptable only if these windows are not needed for ventilation or as an alternate exit in case of fire.

(iv) The exterior doors of the dwelling unit must be lockable. Exterior doors are doors by which someone can enter or exit the dwelling unit.

(e) *Thermal environment.*—(1) *Performance requirement.* The dwelling unit must have and be capable of maintaining a thermal environment healthy for the human body.

(2) *Acceptability criteria.* (i) There must be a safe system for heating the dwelling unit (and a safe cooling system, where present). The system must be in proper operating condition. The system must be able to provide adequate heat (and cooling, if applicable), either directly or indirectly, to each room, in order to assure a healthy living environment appropriate to the climate.

(ii) The dwelling unit must not contain unvented room heaters that burn gas, oil, or kerosene. Electric heaters are acceptable.

(f) *Illumination and electricity.*—(1) *Performance requirement.* Each room must have adequate natural or artificial illumination to permit normal indoor activities and to support the health and safety of occupants. The dwelling unit must have sufficient electrical sources so occupants can use essential electrical appliances. The electrical fixtures and wiring must ensure safety from fire.

(2) *Acceptability criteria.* (i) There must be at least one window in the living room and in each sleeping room.

(ii) The kitchen area and the bathroom must have a permanent ceiling or wall light fixture in proper operating condition. The kitchen area must also have at least one electrical outlet in proper operating condition.

(iii) The living room and each bedroom must have at least two electrical outlets in proper operating condition. Permanent overhead or wall-mounted light fixtures may count as one of the required electrical outlets.

(g) *Structure and materials.*—(1) *Performance requirement.* The dwelling unit must be structurally sound. The structure must not present any threat to the health and safety of the occupants and must protect the occupants from the environment.

(2) *Acceptability criteria.* (i) Ceilings, walls, and floors must not have any serious defects such as severe bulging or leaning, large holes, loose surface materials, severe buckling, missing parts, or other serious damage.

(ii) The roof must be structurally sound and weathertight.

(iii) The exterior wall structure and surface must not have any serious defects such as serious leaning, buckling, sagging, large holes, or defects that may result in air infiltration or vermin infestation.

(iv) The condition and equipment of interior and exterior stairs, halls, porches, walkways, etc., must not present a danger of tripping and falling. For example, broken or missing steps or loose boards are unacceptable.

(v) Elevators must be working and safe.

(h) *Interior air quality.*—(1) *Performance requirement.* The dwelling unit must be free of pollutants in the air at levels that threaten the health of the occupants.

(2) *Acceptability criteria.* (i) The dwelling unit must be free from dangerous levels of air pollution from carbon monoxide, sewer gas, fuel gas, dust, and other harmful pollutants.

(ii) There must be adequate air circulation in the dwelling unit.

(iii) Bathroom areas must have one openable window or other adequate exhaust ventilation.

(iv) Any room used for sleeping must have at least one window. If the window is designed to be openable, the window must work.

(i) *Water supply.* (1) *Performance requirement.* The water supply must be free from contamination.

(2) *Acceptability criteria.* The dwelling unit must be served by an

approvable public or private water supply that is sanitary and free from contamination.

(j) *Lead-based paint performance requirement.*—(1) *Purpose and applicability.* (i) The purpose of paragraph (j) of this section is to implement section 302 of the Lead-Based Paint Poisoning Prevention Act, 42 U.S.C. 4822, by establishing procedures to eliminate as far as practicable the hazards of lead-based paint poisoning for units assisted under this part. Paragraph (j) of this section is issued under 24 CFR 35.24 (b)(4) and supersedes, for all housing to which it applies, the requirements of subpart C of 24 CFR part 35.

(ii) The requirements of paragraph (j) of this section do not apply to 0-bedroom units, units that are certified by a qualified inspector to be free of lead-based paint, or units designated exclusively for elderly. The requirements of subpart A of 24 CFR part 35 apply to all units constructed prior to 1978 covered by a HAP contract under part 982.

(2) *Definitions.*

Chewable surface. Protruding painted surfaces up to five feet from the floor or ground that are readily accessible to children under six years of age; for example, protruding corners, window sills and frames, doors and frames, and other protruding woodwork.

Component. An element of a residential structure identified by type and location, such as a bedroom wall, an exterior window sill, a baseboard in a living room, a kitchen floor, an interior window sill in a bathroom, a porch floor, stair treads in a common stairwell, or an exterior wall.

Defective paint surface. A surface on which the paint is cracking, scaling, chipping, peeling, or loose.

Elevated blood lead level (EBL). Excessive absorption of lead. Excessive absorption is a confirmed concentration of lead in whole blood of 20 ug/dl (micrograms of lead per deciliter) for a single test or of 15–19 ug/dl in two consecutive tests 3–4 months apart.

HEPA means a high efficiency particle accumulator as used in lead abatement vacuum cleaners.

Lead-based paint. A paint surface, whether or not defective, identified as having a lead content greater than or equal to 1 milligram per centimeter squared (mg/cm^2), or 0.5 percent by weight or 5000 parts per million (PPM).

(3) *Requirements for pre-1978 units with children under 6.* (i) If a dwelling unit constructed before 1978 is occupied by a family that includes a child under the age of six years, the initial and each periodic inspection (as required under this part), must include a visual inspection for defective paint surfaces. If defective paint surfaces are found, such surfaces must be treated in accordance with paragraph (j)(6) of this section.

(ii) The HA may exempt from such treatment defective paint surfaces that are found in a report by a qualified lead-based paint inspector not to be lead-based paint, as defined in paragraph (j)(2) of this section. For purposes of this section, a qualified lead-based paint inspector is a State or local health or housing agency, a lead-based paint inspector certified or regulated by a State or local health or housing agency, or an organization recognized by HUD.

(iii) Treatment of defective paint surfaces required under this section must be completed within 30 calendar days of HA notification to the owner. When weather conditions prevent treatment of the defective paint conditions on exterior surfaces within the 30 day period, treatment as required by paragraph (j)(6) of this section may be delayed for a reasonable time.

(iv) The requirements in this paragraph (j)(3) apply to:

(A) All painted interior surfaces within the unit (including ceilings but excluding furniture);

(B) The entrance and hallway providing ingress or egress to a unit in a multi-unit building; and

(C) Exterior surfaces up to five feet from the floor or ground that are readily accessible to children under six years of age (including walls, stairs, decks, porches, railings, windows and doors, but excluding outbuildings such as garages and sheds).

(4) *Additional requirements for pre-1978 units with children under 6 with an EBL.* (i) In addition to the requirements of paragraph (j)(3) of this section, for a dwelling unit constructed before 1978 that is occupied by a family with a child under the age of six years with an identified EBL condition, the initial and each periodic inspection (as required under this part) must include a test for lead-based paint on chewable surfaces. Testing is not required if previous testing of chewable surfaces is negative for lead-based paint or if the chewable surfaces have already been treated.

(ii) Testing must be conducted by a State or local health or housing agency, an inspector certified or regulated by a State or local health or housing agency, or an organization recognized by HUD. Lead content must be tested by using an X-ray fluorescence analyzer (XRF) or by laboratory analysis of paint samples. Where lead-based paint on chewable surfaces is identified, treatment of the paint surface in accordance with paragraph (j)(6) of this section is required, and treatment shall be completed within the time limits in paragraph (j)(3) of this section.

(iii) The requirements in paragraph (j)(4) of this section apply to all protruding painted surfaces up to five feet from the floor or ground that are readily accessible to children under six years of age:

(A) Within the unit;

(B) The entrance and hallway providing access to a unit in a multi-unit building; and

(C) Exterior surfaces (including walls, stairs, decks, porches, railings, windows and doors, but excluding outbuildings such as garages and sheds).

(5) *Treatment of chewable surfaces without testing.* In lieu of the procedures set forth in paragraph (j)(4) of this section, the HA may, at its discretion, waive the testing requirement and require the owner to treat all interior and exterior chewable surfaces in accordance with the methods set out in paragraph (j)(6) of this section.

(6) *Treatment methods and requirements.* Treatment of defective paint surfaces and chewable surfaces must consist of covering or removal of the paint in accordance with the following requirements:

(i) A defective paint surface shall be treated if the total area of defective paint on a component is:

(A) More than 10 square feet on an exterior wall;

(B) More than 2 square feet on an interior or exterior component with a large surface area, excluding exterior walls and including, but not limited to, ceilings, floors, doors, and interior walls; or

(C) More than 10 percent of the total surface area on an interior or exterior component with a small surface area, including, but not limited to, window sills, baseboards and trim.

(ii) Acceptable methods of treatment are: removal by wet scraping, wet sanding, chemical stripping on or off site, replacing painted components, scraping with infra-red or coil type heat gun with temperatures below 1100 degrees, HEPA vacuum sanding, HEPA vacuum needle gun, contained hydroblasting or high pressure wash with HEPA vacuum, and abrasive sandblasting with HEPA vacuum. Surfaces must be covered with durable materials with joints and edges sealed and caulked as needed to prevent the escape of lead contaminated dust.

(iii) Prohibited methods of removal are: open flame burning or torching; machine sanding or grinding without a HEPA exhaust; uncontained

hydroblasting or high pressure wash; and dry scraping except around electrical outlets or except when treating defective paint spots no more than two square feet in any one interior room or space (hallway, pantry, etc.) or totalling no more than twenty square feet on exterior surfaces.

(iv) During exterior treatment soil and playground equipment must be protected from contamination.

(v) All treatment procedures must be concluded with a thorough cleaning of all surfaces in the room or area of treatment to remove fine dust particles. Cleanup must be accomplished by wet washing surfaces with a lead solubilizing detergent such as trisodium phosphate or an equivalent solution.

(vi) Waste and debris must be disposed of in accordance with all applicable Federal, state and local laws.

(7) *Tenant protection.* The owner must take appropriate action to protect residents and their belongings from hazards associated with treatment procedures. Residents must not enter spaces undergoing treatment until cleanup is completed. Personal belongings that are in work areas must be relocated or otherwise protected from contamination.

(8) *Owner information responsibilities.* Prior to execution of the HAP contract, the owner must inform the HA and the family of any knowledge of the presence of lead-based paint on the surfaces of the residential unit.

(9) *HA data collection and recordkeeping responsibilities.* (i) The HA must attempt to obtain annually from local health agencies the names and addresses of children with identified EBLs and must annually match this information with the names and addresses of participants under this part. If a match occurs, the HA must determine whether local health officials have tested the unit for lead-based paint. If the unit has lead-based paint the HA must require the owner to treat the lead-based paint. If the owner does not complete the corrective actions required by this section, the family must be issued a certificate or voucher to move.

(ii) The HA must keep a copy of each inspection report for at least three years. If a dwelling unit requires testing, or if the dwelling unit requires treatment of chewable surfaces based on the testing, the HA must keep the test results indefinitely and, if applicable, the owner certification of treatment. The records must indicate which chewable surfaces in the dwelling units have been tested and which chewable surfaces in the units have been treated. If records establish that certain chewable surfaces were tested or tested and treated in accordance with the standards prescribed in this section, such chewable surfaces do not have to be tested or treated at any subsequent time.

(k) *Access performance requirement.* The dwelling unit must be able to be used and maintained without unauthorized use of other private properties. The building must provide an alternate means of exit in case of fire (such as fire stairs or egress through windows).

(l) *Site and Neighborhood.*—(1) *Performance requirement.* The site and neighborhood must be reasonably free from disturbing noises and reverberations and other dangers to the health, safety, and general welfare of the occupants.

(2) *Acceptability criteria.* The site and neighborhood may not be subject to serious adverse environmental conditions, natural or manmade, such as dangerous walks or steps; instability; flooding, poor drainage, septic tank back-ups or sewage hazards; mudslides; abnormal air pollution, smoke or dust; excessive noise, vibration or vehicular traffic; excessive accumulations of trash; vermin or rodent infestation; or fire hazards.

(m) *Sanitary condition.*—(1) *Performance requirement.* The dwelling unit and its equipment must be in sanitary condition.

(2) *Acceptability criteria.* The dwelling unit and its equipment must be free of vermin and rodent infestation.

(n) *Smoke detectors performance requirement.*—(1) Except as provided in paragraph (n)(2) of this section, each dwelling unit must have at least one battery-operated or hard-wired smoke detector, in proper operating condition, on each level of the dwelling unit, including basements but excepting crawl spaces and unfinished attics. Smoke detectors must be installed in accordance with and meet the requirements of the National Fire Protection Association Standard (NFPA) 74 (or its successor standards). If the dwelling unit is occupied by any hearing-impaired person, smoke detectors must have an alarm system, designed for hearing-impaired persons as specified in NFPA 74 (or successor standards).

(2) For units assisted prior to April 24, 1993, owners who installed battery-operated or hard-wired smoke detectors prior to April 24, 1993 in compliance with HUD's smoke detector requirements, including the regulations published on July 30, 1992, (57 FR 33846), will not be required subsequently to comply with any additional requirements mandated by NFPA 74 (i.e., the owner would not be required to install a smoke detector in a basement not used for living purposes, nor would the owner be required to change the location of the smoke detectors that have already been installed on the other floors of the unit).

§ 982.402 Subsidy standards.

(a) *Purpose.* (1) The HA must establish subsidy standards that determine the number of bedrooms needed for families of different sizes and compositions.

(2) For each family, the HA determines the appropriate number of bedrooms under the HA subsidy standards (family unit size).

(3) The family unit size number is entered on the certificate or voucher issued to the family. The HA issues the family a voucher or certificate for the family unit size when a family is selected for participation in the program.

(b) *Determining family unit size.* The following requirements apply when the HA determines family unit size under the HA subsidy standards:

(1) The subsidy standards must provide for the smallest number of bedrooms needed to house a family without overcrowding.

(2) The subsidy standards must be consistent with space requirements under the housing quality standards (See § 982.401(d)).

(3) The subsidy standards must be applied consistently for all families of like size and composition.

(4) A child who is temporarily away from the home because of placement in foster care is considered a member of the family in determining the family unit size.

(5) A family that consists of a pregnant woman (with no other persons) must be treated as a two-person family.

(6) Any live-in aide (approved by the HA to reside in the unit to care for a family member who is disabled or is at least 50 years of age) must be counted in determining the family unit size;

(7) Unless a live-in-aide resides with the family, the family unit size for any family consisting of a single person must be either a zero or one-bedroom unit, as determined under the HA subsidy standards.

(8) In determining family unit size for a particular family, the HA may grant an exception to its established subsidy standards if the HA determines that the exception is justified by the age, sex, health, handicap, or relationship of family members or other personal circumstances. (For a single person other than a disabled or elderly person

or remaining family member, such HA exception may not override the limitation in paragraph (b)(7) of this section.)

(c) *Effect of family unit size—maximum subsidy.* The family unit size, as determined for a family under the HA subsidy standards, is used to determine the maximum rent subsidy for the family:

(1) *Certificate program.* HUD establishes fair market rents by number of bedrooms. The sum of the initial contract rent plus any utility allowance may not exceed either:

(i) The FMR/exception rent limit for the family unit size; or

(ii) The FMR/exception rent limit for the unit rented by the family.

(2) *Voucher program.* The HA establishes payment standards by number of bedrooms. The payment standard for the family must be the lower of:

(i) The payment standard for the family unit size; or

(ii) The payment standard for the unit rented by the family.

(d) *Size of unit occupied by family.* (1) The family may lease an otherwise acceptable dwelling unit with fewer bedrooms than the family unit size. However, the dwelling unit must meet the applicable HQS space requirements.

(2) The family may lease an otherwise acceptable dwelling unit with more bedrooms than the family unit size.

§ 982.403 Terminating HAP contract: When unit is too big or too small.

(a) *Violation of HQS space standards.* (1) Paragraph (a) of this section applies to the tenant-based certificate program and voucher program.

(2) If the HA determines that a unit does not meet the HQS space standards because of an increase in family size or a change in family composition, the HA must issue the family a new certificate or voucher, and the family and HA must try to find an acceptable unit as soon as possible.

(3) If an acceptable unit is available for rental by the family, the HA must terminate the HAP contract in accordance with its terms.

(b) *Certificate program only—Subsidy too big for family size.*

(1) Paragraph (b) of this section applies to the tenant-based certificate program.

(2) The HA must issue the family a new certificate, and the family and HA must try to find an acceptable unit as soon as possible if:

(i) The family is residing in a dwelling unit with a larger number of bedrooms than appropriate for the family unit size under the HA subsidy standards; and

(ii) The gross rent for the unit (sum of the contract rent plus any utility allowance for the unit size leased) exceeds the FMR/exception rent limit for the family unit size under the HA subsidy standards.

(3) The HA must notify the family that exceptions to the subsidy standards may be granted, and the circumstances in which the grant of an exception will be considered by the HA.

(4) If an acceptable unit is available for rental by the family within the FMR/exception rent limit, the HA must terminate the HAP contract in accordance with its terms.

(c) *Termination.* When the HA terminates the HAP contract (under paragraphs (a) or (b) of this section):

(1) The HA must notify the family and the owner of the termination; and

(2) The HAP contract terminates at the end of the calendar month that follows the calendar month in which the HA gives such notice to the owner.

(3) The family may move to a new unit in accordance with § 982.314.

§ 982.404 Maintenance: Owner and family responsibility; HA remedies.

(a) *Owner obligation.* (1) The owner must maintain the unit in accordance with HQS.

(2) If the owner fails to maintain the dwelling unit in accordance with HQS, the HA must take prompt and vigorous action to enforce the owner obligations. HA remedies for such breach of the HQS include termination, suspension or reduction of housing assistance payments and termination of the HAP contract.

(3) The HA must not make any housing assistance payments for a dwelling unit that fails to meet the HQS, unless the owner corrects the defect within the period specified by the HA and the HA verifies the correction. If a defect is life threatening, the owner must correct the defect within no more than 24 hours. For other defects, the owner must correct the defect within no more than 30 calendar days (or any HA-approved extension).

(4) The owner is not responsible for a breach of the HQS that is not caused by the owner, and for which the family is responsible (as provided in § 982.404(b) and § 982.551(c)). (However, the HA may terminate assistance to a family because of HQS breach caused by the family.)

(b) *Family obligation.* (1) The family is responsible for a breach of the HQS that is caused by any of the following:

(i) The family fails to pay for any utilities that the owner is not required to pay for, but which are to be paid by the tenant;

(ii) The family fails to provide and maintain any appliances that the owner is not required to provide, but which are to be provided by the tenant; or

(iii) Any member of the household or guest damages the dwelling unit or premises (damages beyond ordinary wear and tear).

(2) If an HQS breach caused by the family is life threatening, the family must correct the defect within no more than 24 hours. For other family-caused defects, the family must correct the defect within no more than 30 calendar days (or any HA-approved extension).

(3) If the family has caused a breach of the HQS, the HA must take prompt and vigorous action to enforce the family obligations. The HA may terminate assistance for the family in accordance with § 982.552.

§ 982.405 HA periodic unit inspection.

(a) The HA must inspect the unit leased to a family at least annually, and at other times as needed, to determine if the unit meets HQS.

(b) The HA must conduct supervisory quality control HQS inspections.

(c) In scheduling inspections, the HA must consider complaints and any other information brought to the attention of the HA.

(d) The HA must notify the owner of defects shown by the inspection.

(e) The HA may not charge the family or owner for initial inspection or reinspection of the unit.

§ 982.406 Enforcement of HQS.

Part 982 does not create any right of the family, or any party other than HUD or the HA, to require enforcement of the HQS requirements by HUD or the HA, or to assert any claim against HUD or the HA, for damages, injunction or other relief, for alleged failure to enforce the HQS.

Subpart J—Housing Assistance Payments Contract and Owner Responsibility

§ 982.451 Housing assistance payments contract.

(a) The housing assistance payments contract (HAP contract) is a contract between the HA and an owner. In the HAP contract for tenant-based assistance, the owner agrees to lease a specified dwelling unit to a specified eligible family, and the HA agrees to make monthly housing assistance payments to the owner for the family.

(b)(1) The HAP contract must be in the form required by HUD.

(2) The term of the HAP contract is the same as the term of the lease.

(c)(1) The amount of the monthly housing assistance payment by the HA

to the owner is determined by the HA in accordance with HUD regulations and other requirements. The amount of the housing assistance payment is subject to change during the HAP contract term.

(2) The monthly housing assistance payment by the HA is credited toward the monthly rent to owner under the family's lease.

(3) The total of rent paid by the tenant plus the HA housing assistance payment to the owner may not be more than the rent to owner. The owner must immediately return any excess payment to the HA.

(4)(i) The part of the rent to owner which is paid by the tenant may not be more than:

(A) The rent to owner; minus

(B) The HA housing assistance payment to the owner.

(ii) The owner may not demand or accept any rent payment from the tenant in excess of this maximum, and must immediately return any excess rent payment to the tenant.

(iii) The family is not responsible for payment of the portion of rent to owner covered by the housing assistance payment under the HAP contract between the owner and the HA. See § 982.310(b).

(5) The HA must pay the housing assistance payment promptly when due to the owner in accordance with the HAP contract. If the HA fails to make timely payment, the HA may be obligated to pay a late payment fee in accordance with State or local law. However, unless authorized by HUD the HA may only use the following sources for payment of any such late payment fee:

(i) Administrative fee income; or

(ii) The administrative fee reserve.

§ 982.452 Owner responsibilities.

(a) The owner is responsible for performing all of the owner's obligations under the HAP contract and the lease.

(b) The owner is responsible for:

(1) Performing all management and rental functions for the assisted unit, including selecting a certificate-holder or voucher-holder to lease the unit, and deciding if the family is suitable for tenancy of the unit.

(2) Maintaining the unit in accordance with HQS, including performance of ordinary and extraordinary maintenance.

(3) Complying with equal opportunity requirements.

(4) Preparing and furnishing to the HA information required under the HAP contract.

(5) Collecting from the family:

(i) Any security deposit.

(ii) The tenant contribution (the part of rent to owner not covered by the housing assistance payment).

(iii) Any charges for unit damage by the family.

(6) Enforcing tenant obligations under the lease.

(7) Paying for utilities and services (unless paid by the family under the lease).

(c) For provisions on modifications to a dwelling unit occupied or to be occupied by a disabled person, see 24 CFR 100.203.

§ 982.453 Owner breach of contract.

(a) Any of the following actions by the owner (including a principal or other interested party) is a breach of the HAP contract by the owner:

(1) If the owner has violated any obligation under the HAP contract for the dwelling unit, including the owner's obligation to maintain the unit in accordance with the HQS.

(2) If the owner has violated any obligation under any other housing assistance payments contract under Section 8 of the 1937 Act (42 U.S.C. 1437f).

(3) If the owner has committed fraud, bribery or any other corrupt or criminal act in connection with any federal housing program.

(4) For projects with mortgages insured by HUD or loans made by HUD, if the owner has failed to comply with the regulations for the applicable mortgage insurance or loan program, with the mortgage or mortgage note, or with the regulatory agreement; or if the owner has committed fraud, bribery or any other corrupt or criminal act in connection with the mortgage or loan.

(5) If the owner has engaged in drug-trafficking.

(b) The HA rights and remedies against the owner under the HAP contract include recovery of overpayments, abatement or other reduction of housing assistance payments, termination of housing assistance payments, and termination of the HAP contract.

§ 982.454 Termination of HAP contract: Insufficient funding.

The HA may terminate the HAP contract if the HA determines, in accordance with HUD requirements, that funding under the consolidated ACC is insufficient to support continued assistance for families in the program. See § 982.455 concerning owner notice of termination.

§ 982.455 Termination of HAP contract: Expiration and opt-out.

(a) *Automatic.* The HAP contract terminates automatically 180 calendar days after the last housing assistance payment to the owner.

(b) *Owner termination notice.* (1) *Law.* Paragraph (b) of this section implements Section 8(c) (9) and (10) of the 1937 Act (42 U.S.C. 1437f(c) (9) and (10)) for the tenant-based Section 8 programs.

(2) *Definitions.* The following terms are defined for purposes of this section:

(i) *Termination.* Termination of the HAP contract because of:

(A) Owner opt-out; or

(B) Expiration of the HAP contract.

(ii) *Opt-out.* Owner's decision to terminate tenancy of an assisted family for ''other good cause'' that is a business or economic reason for termination of tenancy. See § 982.310 (a)(3) and (d).

(iii) *Expiration.* ''Expiration'' means the occurrence of either of the following events:

(A) Automatic termination of the HAP contract when 180 calendar days have passed since the last housing assistance payment.

(B) An HA determination, in accordance with HUD requirements, that the HAP contract must be terminated because there is insufficient funding under the consolidated ACC to support continued assistance for families in the program.

(3) *Owner termination notice.* Not less than 90 calendar days before a termination of a tenant-based HAP contract because of an opt-out or expiration, the owner must provide written notice of the termination to the HUD field office, the HA and the family. The owner's notice must specify the reasons for the termination. The notice must contain sufficient detail to enable the HUD field office to evaluate whether the termination is lawful and whether there are additional actions that can be taken by HUD to avoid the termination. The owner's notice must state that the owner and the HA may agree to a renewal of the HAP contract, thus avoiding the termination.

(4) *HUD review of owner termination notice.* (i) The HUD field office must review the owner's notice, and consider whether there are additional actions which should be taken to avoid the termination.

(ii) For a unit assisted under the certificate program:

(A) The HUD field office will determine whether the HA has properly adjusted the contract rent in accordance with the HAP contract and HUD regulations. If not the HUD field office will require the HA to make a proper adjustment of the contract rent in accordance with the HAP contract and the regulation.

(B) In case of termination because of an opt-out, the owner must be offered

the opportunity to enter into a new HAP contract (and assisted lease) at the maximum initial contract rent allowed (within the FMR/exception rent limit). However, the rent to owner may not exceed the reasonable rent for a comparable unassisted unit.

(iii) The HUD field office will issue a written finding of the legality of the HAP contract termination and the reasons for the termination as stated in the owner's notice, including any actions taken to avoid the termination. Within 30 calendar days of HUD's finding, the owner must provide written notice of HUD's decision to the tenant.

(iv) The owner may proceed with eviction whether the HUD field office approves or disapproves, or fails to complete the required review of the owner notice, before expiration of the 90 calendar day review period.

§ 982.456 Third parties.

(a) Even if the family continues to occupy the unit, the HA may exercise any rights and remedies against the owner under the HAP contract.

(b) The family is not a party to or third party beneficiary of the HAP contract. The family may not exercise any right or remedy against the owner under the HAP contract. (However, the tenant may exercise any right or remedies against the owner under the lease between the tenant and the owner.)

(c) The HAP contract shall not be construed as creating any right of the family or other third party (other than HUD) to enforce any provision of the HAP contract, or to assert any claim against HUD, the HA or the owner under the HAP contract.

§ 982.457 Owner refusal to lease.

(a) Section 8(t) of the 1937 Act (42 U.S.C. 1437f(t)) provides that an owner who has entered into a HAP contract under Section 8 of the 1937 Act on behalf of any tenant in a multifamily housing project shall not refuse:

(1) To lease any available dwelling unit in any multifamily housing project of the owner that rents for an amount not greater than the fair market rent for a comparable unit to a holder of a rental certificate under Section 8 and to enter into a HAP contract respecting the unit, if a proximate cause of the refusal is the status of the prospective tenant as a holder of a certificate; or

(2) To lease any available dwelling unit in any multifamily housing project of the owner to a voucher holder and to enter into a HAP contract respecting the unit, a proximate cause of which is the status of such prospective tenant as a holder of such voucher.

(b) For the purposes of Section 8(t), the term *multifamily housing project* means a residential building containing more than four dwelling units.

Subpart K—Rent and Housing Assistance Payment—[Reserved]

Subpart L—Family Obligations; Denial and Termination of Assistance

§ 982.551 Obligations of participant.

(a) *Purpose.* This section states the obligations of a participant family under the program.

(b) *Supplying required information.*—(1) The family must supply any information that the HA or HUD determines is necessary in the administration of the program, including submission of required evidence of citizenship or eligible immigration status (as provided by 24 CFR part 812). ''Information'' includes any requested certification, release or other documentation.

(2) The family must supply any information requested by the HA or HUD for use in a regularly scheduled reexamination or interim reexamination of family income and composition in accordance with HUD requirements. For provisions on reexamination and computation of family income, see 24 CFR part 813.

(3) The family must disclose and verify social security numbers (as provided by 24 CFR part 750) and must sign and submit consent forms for obtaining information in accordance with 24 CFR part 760 and 24 CFR part 813.

(4) Any information supplied by the family must be true and complete.

(c) *HQS breach caused by family.* The family is responsible for an HQS breach caused by the family as described in § 982.404(b).

(d) *Allowing HA inspection.* The family must allow the HA to inspect the unit at reasonable times and after reasonable notice.

(e) *Violation of lease.* The family may not commit any serious or repeated violation of the lease.

(f) *Family notice of move or lease termination.* The family must notify the HA and the owner before the family moves out of the unit, or terminates the lease on notice to the owner. See § 982.314(d).

(g) *Owner eviction notice.* The family must promptly give the HA a copy of any owner eviction notice.

(h) *Use and occupancy of unit.*—(1) The family must use the assisted unit for residence by the family. The unit must be the family's only residence.

(2) The composition of the assisted family residing in the unit must be approved by the HA. The family must promptly inform the HA of the birth, adoption or court-awarded custody of a child. The family must request HA approval to add any other family member as an occupant of the unit.

(3) The family must promptly notify the HA if any family member no longer resides in the unit.

(4) If the HA has given approval, a foster child or a live-in-aide may reside in the unit. The HA has the discretion to adopt reasonable policies concerning residence by a foster child or a live-in-aide, and defining when HA consent may be given or denied.

(5) Members of the household may engage in legal profitmaking activities in the unit, but only if such activities are incidental to primary use of the unit for residence by members of the family.

(6) The family must not sublease or let the unit.

(7) The family must not assign the lease or transfer the unit.

(i) *Absence from unit.* The family must supply any information or certification requested by the HA to verify that the family is living in the unit, or relating to family absence from the unit, including any HA-requested information or certification on the purposes of family absences. The family must cooperate with the HA for this purpose. The family must promptly notify the HA of absence from the unit.

(j) *Interest in unit.* The family must not own or have any interest in the unit.

(k) *Fraud and other program violation.* The members of the family must not commit fraud, bribery or any other corrupt or criminal act in connection with the programs.

(l) *Crime by family members.* The members of the family may not engage in drug-related criminal activity, or violent criminal activity (see § 982.553).

(m) *Other housing assistance.* An assisted family, or members of the family, may not receive Section 8 tenant-based assistance while receiving another housing subsidy, for the same unit or for a different unit, under any duplicative (as determined by HUD or in accordance with HUD requirements) federal, State or local housing assistance program.

§ 982.552 HA denial or termination of assistance for family.

(a) *Action or inaction by family.*—(1) This section states the grounds on which an HA may deny assistance for an applicant or terminate assistance for a participant under the programs because of the family's action or failure to act. The provisions of this section do not affect denial or termination of

assistance for grounds other than action or failure to act by the family.

(2) Denial of assistance for an applicant may include any or all of the following: denying listing on the HA waiting list, denying or withdrawing a certificate or voucher, refusing to enter into a HAP contract or approve a lease, and refusing to process or provide assistance under portability procedures.

(3) Termination of assistance for a participant may include any or all of the following: refusing to enter into a HAP contract or approve a lease, terminating housing assistance payments under an outstanding HAP contract, and refusing to process or provide assistance under portability procedures.

(4) This section does not limit or affect exercise of the HA rights and remedies against the owner under the HAP contract, including termination, suspension or reduction of housing assistance payments, or termination of the HAP contract.

(b) *Grounds for denial or termination of assistance.* The HA may at any time deny program assistance for an applicant, or terminate program assistance for a participant, for any of the following grounds:

(1) If the family violates any family obligations under the program (see § 982.551).

(2) If any member of the family has ever been evicted from public housing.

(3) If an HA has ever terminated assistance under the certificate or voucher program for any member of the family.

(4) If any member of the family commits drug-related criminal activity, or violent criminal activity (see § 982.553).

(5) If any member of the family commits fraud, bribery or any other corrupt or criminal act in connection with any federal housing program.

(6) If the family currently owes rent or other amounts to the HA or to another HA in connection with Section 8 or public housing assistance under the 1937 Act.

(7) If the family has not reimbursed any HA for amounts paid to an owner under a HAP contract for rent, damages to the unit, or other amounts owed by the family under the lease.

(8) If the family breaches an agreement with the HA to pay amounts owed to an HA, or amounts paid to an owner by an HA. (The HA, at its discretion, may offer a family the opportunity to enter an agreement to pay amounts owed to an HA or amounts paid to an owner by an HA. The HA may prescribe the terms of the agreement.)

(9) If a family participating in the FSS program fails to comply, without good cause, with the family's FSS contract of participation.

(10) If the family has engaged in or threatened abusive or violent behavior toward HA personnel.

(c) *HA discretion to consider circumstances.*—(1) In deciding whether to deny or terminate assistance because of action or failure to act by members of the family, the HA has discretion to consider all of the circumstances in each case, including the seriousness of the case, the extent of participation or culpability of individual family members, and the effects of denial or termination of assistance on other family members who were not involved in the action or failure.

(2) The HA may impose, as a condition of continued assistance for other family members, a requirement that family members who participated in or were culpable for the action or failure will not reside in the unit. The HA may permit the other members of a participant family to continue receiving assistance.

(d) *Requirement to sign consent forms.* The HA must deny or terminate assistance if any member of the family fails to sign and submit consent forms for obtaining information in accordance with 24 CFR part 760 and 24 CFR part 813.

(e) *Restriction on assistance to noncitizens.* The family must submit required evidence of citizenship or eligible immigration status. See 24 CFR 812.9 for a statement of circumstances in which the HA must deny or terminate assistance because a family member does not establish citizenship or eligible immigration status, and the applicable informal hearing procedures. See 24 CFR 812.10 for provisions on assistance for mixed families (families whose members include those with eligible immigration status, and those without eligible immigration status) instead of denial or termination of assistance, and for provisions on deferral of termination of assistance.

(f) *Information for family.* The HA must give the family a written description of:

(1) Family obligations under the program.

(2) The grounds on which the HA may deny or terminate assistance because of family action or failure to act.

(3) The HA informal hearing procedures.

§ 982.553 Crime by family members.

(a) At any time, the HA may deny assistance to an applicant, or terminate assistance to a participant family if any member of the family commits:

(1) Drug-related criminal activity; or

(2) Violent criminal activity.

(b) If the HA seeks to deny or terminate assistance because of illegal use, or possession for personal use, of a controlled substance, such use or possession must have occurred within one year before the date that the HA provides notice to the family of the HA determination to deny or terminate assistance. The HA may not deny or terminate assistance for such use or possession by a family member, if the family member can demonstrate that he or she:

(1) Has an addiction to a controlled substance, has a record of such an impairment, or is regarded as having such an impairment; and

(2) Is recovering, or has recovered from, such addiction and does not currently use or possess controlled substances. The HA may require a family member who has engaged in the illegal use of drugs to submit evidence of participation in, or successful completion of, a treatment program as a condition to being allowed to reside in the unit.

(c) *Evidence of criminal activity.* In determining whether to deny or terminate assistance based on drug-related criminal activity or violent criminal activity, the HA may deny or terminate assistance if the preponderance of evidence indicates that a family member has engaged in such activity, regardless of whether the family member has been arrested or convicted.

§ 982.554 Informal review for applicant.

(a) *Notice to applicant.* The HA must give an applicant for participation prompt notice of a decision denying assistance to the applicant. The notice must contain a brief statement of the reasons for the HA decision. The notice must also state that the applicant may request an informal review of the decision and must describe how to obtain the informal review.

(b) *Informal review process.* The HA must give an applicant an opportunity for an informal review of the HA decision denying assistance to the applicant. The administrative plan must state the HA procedures for conducting an informal review. The HA review procedures must comply with the following:

(1) The review may be conducted by any person or persons designated by the HA, other than a person who made or approved the decision under review or a subordinate of this person.

(2) The applicant must be given an opportunity to present written or oral objections to the HA decision.

(3) The HA must notify the applicant of the HA final decision after the informal review, including a brief statement of the reasons for the final decision.

(c) *When informal review is not required.* The HA is not required to provide the applicant an opportunity for an informal review for any of the following:

(1) Discretionary administrative determinations by the HA.

(2) General policy issues or class grievances.

(3) A determination of the family unit size under the HA subsidy standards.

(4) An HA determination not to approve an extension or suspension of a certificate or voucher term.

(5) An HA determination not to grant approval to lease a unit under the program or to approve a proposed lease.

(6) An HA determination that a unit selected by the applicant is not in compliance with HQS.

(7) An HA determination that the unit is not in accordance with HQS because of the family size or composition.

(d) *Restrictions on assistance for noncitizens.* The informal hearing provisions for the denial of assistance on the basis of ineligible immigration status are contained in 24 CFR 812.9.

§ 982.555 Informal hearing for participant.

(a) *When hearing is required.*—(1) An HA must give a participant family an opportunity for an informal hearing to consider whether the following HA decisions relating to the individual circumstances of a participant family are in accordance with the law, HUD regulations and HA policies:

(i) A determination of the family's annual or adjusted income, and the use of such income to compute the housing assistance payment.

(ii) A determination of the appropriate utility allowance (if any) for tenant-paid utilities from the HA utility allowance schedule.

(iii) A determination of the family unit size under the HA subsidy standards.

(iv) A determination that a certificate program family is residing in a unit with a larger number of bedrooms than appropriate for the family unit size under the HA subsidy standards, or the HA determination to deny the family's request for an exception from the standards.

(v) A determination to terminate assistance for a participant family because of the family's action or failure to act (see § 982.552).

(vi) A determination to terminate assistance because the participant family has been absent from the assisted unit for longer than the maximum period permitted under HA policy and HUD rules.

(2) In the cases described in paragraphs (a)(1) (iv), (v) and (vi) of this section, the HA must give the opportunity for an informal hearing before the HA terminates housing assistance payments for the family under an outstanding HAP contract.

(b) *When hearing is not required.* The HA is not required to provide a participant family an opportunity for an informal hearing for any of the following:

(1) Discretionary administrative determinations by the HA.

(2) General policy issues or class grievances.

(3) Establishment of the HA schedule of utility allowances for families in the program.

(4) An HA determination not to approve an extension or suspension of a certificate or voucher term.

(5) An HA determination not to approve a unit or lease.

(6) An HA determination that an assisted unit is not in compliance with HQS. (However, the HA must provide the opportunity for an informal hearing for a decision to terminate assistance for a breach of the HQS caused by the family as described in § 982.551(c).)

(7) An HA determination that the unit is not in accordance with HQS because of the family size.

(8) A determination by the HA to exercise or not to exercise any right or remedy against the owner under a HAP contract.

(c) *Notice to family.* (1) In the cases described in paragraphs (a)(1) (i), (ii) and (iii) of this section, the HA must notify the family that the family may ask for an explanation of the basis of the HA determination, and that if the family does not agree with the determination, the family may request an informal hearing on the decision.

(2) In the cases described in paragraphs (a)(1) (iv), (v) and (vi) of this section, the HA must give the family prompt written notice that the family may request a hearing. The notice must:

(i) Contain a brief statement of reasons for the decision,

(ii) State that if the family does not agree with the decision, the family may request an informal hearing on the decision, and

(iii) State the deadline for the family to request an informal hearing.

(d) *Expeditious hearing process.* Where a hearing for a participant family is required under this section, the HA must proceed with the hearing in a reasonably expeditious manner upon the request of the family.

(e) *Hearing procedures*—(1) *Administrative plan.* The administrative plan must state the HA procedures for conducting informal hearings for participants.

(2) *Discover*—(i) *By family.* The family must be given the opportunity to examine before the HA hearing any HA documents that are directly relevant to the hearing. The family must be allowed to copy any such document at the family's expense. If the HA does not make the document available for examination on request of the family, the HA may not rely on the document at the hearing.

(ii) *By HA.* The HA hearing procedures may provide that the HA must be given the opportunity to examine at HA offices before the HA hearing any family documents that are directly relevant to the hearing. The HA must be allowed to copy any such document at the HA's expense. If the family does not make the document available for examination on request of the HA, the family may not rely on the document at the hearing.

(iii) *Documents.* The term ''documents'' includes records and regulations.

(3) *Representation of family.* At its own expense, the family may be represented by a lawyer or other representative.

(4) *Hearing officer: Appointment and authority.* (i) The hearing may be conducted by any person or persons designated by the HA, other than a person who made or approved the decision under review or a subordinate of this person.

(ii) The person who conducts the hearing may regulate the conduct of the hearing in accordance with the HA hearing procedures.

(5) *Evidence.* The HA and the family must be given the opportunity to present evidence, and may question any witnesses. Evidence may be considered without regard to admissibility under the rules of evidence applicable to judicial proceedings.

(6) *Issuance of decision.* The person who conducts the hearing must issue a written decision, stating briefly the reasons for the decision. Factual determinations relating to the individual circumstances of the family shall be based on a preponderance of the evidence presented at the hearing. A copy of the hearing decision shall be furnished promptly to the family.

(f) *Effect of decision.* The HA is not bound by a hearing decision:

(1) Concerning a matter for which the HA is not required to provide an opportunity for an informal hearing under this section, or that otherwise exceeds the authority of the person conducting the hearing under the HA hearing procedures.

(2) Contrary to HUD regulations or requirements, or otherwise contrary to federal, State, or local law.

(3) If the HA determines that it is not bound by a hearing decision, the HA must promptly notify the family of the determination, and of the reasons for the determination.

(g) *Restrictions on assistance for noncitizens.* The informal hearing provisions for the denial of assistance on the basis of ineligible immigration status are contained in 24 CFR 812.9.

Subpart M—Special Housing Types—[Reserved]

16. Subpart E of part 982, is amended as follows:

16a. In § 982.3, the definition for *''EO plan''* is removed.

17. Paragraph (f)(2) of § 982.201 is revised to read as follows:

§ 982.201 Eligibility.

* * * * *

(f) * * *

(2) *Grounds for decision.* For a discussion of the grounds for denying assistance because of action or inaction by the applicant, see § 982.552.

18–19. In § 982.202, paragraph (b)(1) is amended by revising the last sentence, and paragraph (d) is amended by removing the words ''and EO plan'' from the end of the first sentence, to read as follows:

§ 982.202 How applicants are selected: General requirements.

* * * * *

(b) * * *

(1) * * * (See § 982.553.)

* * * * *

20. In § 982.204, paragraph (a) is amended by removing the words ''and EO plan'' from the end of the second sentence.

21. In § 982.206, paragraphs (a)(2) and (b)(2) are revised to read as follows:

§ 982.206 Waiting list: Opening and closing; public notice.

(a) * * *

(2) The HA must give the public notice by publication in a local newspaper of general circulation, and also by minority media.

* * * * *

(b) * * *

(2) If the waiting list is open, the HA must accept applications from families for whom the list is open unless there is good cause for not accepting the applications (such as a denial of assistance because of action or inaction by members of the family) for the grounds stated in § 982.552.

* * * * *

22. Part 983 is added to read as follows:

PART 983—SECTION 8 PROJECT-BASED CERTIFICATE PROGRAM

Subpart A—General Information

Sec.
983.1 Purpose and applicability.
983.2 Additional definitions.
983.3 Information to be submitted to HUD by the HA concerning its plan to attach assistance to units.
983.4 HUD review of HA plans to attach assistance to units.
983.5 Housing quality standards and construction standards.
983.6 Site and neighborhood standards.
983.7 Eligible and ineligible properties and HA-owned units.
983.8 Rehabilitation: Minimum expenditure requirement.
983.9 Prohibition against new construction or rehabilitation with U.S. Housing Act of l937 assistance and use of flexible subsidy; pledge of Agreement or HAP contract.
983.10 Displacement, relocation, and acquisition.
983.11 Other Federal requirements.
983.12 Initial contract rents.
983.13 Annual contract rent adjustments.
983.14 Special contract rent adjustments.

Subpart B—Owner Application Submission to Agreement

983.51 HA unit selection policy, advertising, and owner application requirements.
983.52 Rehabilitation: Initial inspection and determination of unit eligibility.
983.53 Rehabilitation: HUD field office review of applications.
983.54 Rehabilitation: Work write-ups.
983.55 New construction: HA evaluation and technical processing.
983.56 New construction: HUD field office review of applications.
983.57 New construction: Working drawings and specifications.

Subpart C—Agreement and New Construction or Rehabilitation Period

983.101 Agreement to enter into HAP contract, and contract rents in Agreement.
983.102 Owner selection of contractor.
983.103 New construction or rehabilitation period.
983.104 New construction or rehabilitation completion.

Subpart D—Housing Assistance Payments Contract

983.151 Housing assistance payments contract (HAP contract).
983.152 Reduction of number of units covered by HAP contract.

Subpart E—Management

983.201 Responsibilities of the HA.
983.202 Responsibilities of the owner.
983.203 Family participation.
983.204 Maintenance, operation and inspections.
983.205 Reexamination of family income and composition.
983.206 Overcrowded and underoccupied units.
983.207 Assisted tenancy and termination of tenancy.
983.208 Informal review.

Authority: 42 U.S.C. 1437f and 3535(d).

Subpart A—General Information

§ 983.1 Purpose and applicability.

(a) This part 983 establishes the procedures under which a Housing Agency (HA) may, at its sole option, choose to provide Section 8 project-based assistance using funds provided to the HA for its Section 8 rental certificate program. This part 983 implements section 8(d)(2) of the 1937 Act (42 U.S.C. 1437f(d)(2)), which directs the Department to permit an HA to ''attach to structures'' up to 15 percent of the Section 8 assistance provided by the HA under the certificate program. (A 30 percent limit is applicable for certain State-assisted units).

(b) Within this 15 percent limit, the HA may attach a Section 8 housing assistance payments (HAP) contract to a structure if the owner agrees to construct or rehabilitate the structure *other than* with assistance provided under the United States Housing Act of 1937. The purpose of the Project-Based Certificate (PBC) Program is to induce property owners to construct standard, or upgrade substandard, rental housing stock, and make it available to low-income families at rents within the Section 8 existing housing fair market rents.

(c) This part 983 refers to assistance that is attached to units as ''project-based'' assistance to distinguish this assistance from the ''tenant-based'' assistance provided by the certificate and the voucher programs under part 982 of this chapter. With tenant-based assistance, the assisted unit is selected by the family. The HA then enters into a HAP contract, which only covers a single unit and the specific assisted family. If the family moves out of a unit, the HAP contract terminates. The family

may move with continued tenant-based assistance to a new unit. With project-based assistance, the HA enters into a HAP contract to make housing assistance payments during the contract term for a specific unit. The subsidy is paid when the owner leases the unit to an eligible family. (The unit may be vacant for a limited time.) To fill vacant project-based units, the HA refers families from its waiting list to the project owner. Because the assistance is tied to the unit, a family that moves from the unit does not have any right to continued assistance. The unit is rented to another eligible family.

(d) Except as otherwise expressly modified or excluded by this part 983, all provisions of part 982 of this chapter apply to project-based assistance under this part 983.

(e) The following sections in part 982 of this chapter, which implement the tenant-based aspect of the certificate program, do not apply to project-based assistance under this part 983: 24 CFR part 982, subpart H (Where family can live and move); § 982.314 of this chapter (Move with continued tenant-based assistance); and § 982.303 of this chapter (Term of a certificate or voucher). Other sections in this part 983 identify other tenant-based provisions of part 982 of this chapter that do not apply to project-based assistance under this part 983.

(f) Subparts C and F of this part, which implement shared housing and assistance for owners of manufactured housing for the tenant-based aspect of the certificate program, do not apply to project-based assistance under this part 983.

(g) HUD does not provide any separate funding for project-based assistance. Funding for project-based assistance is part of the ACC funding authority for the HA's entire Section 8 certificate program.

§ 983.2 Additional definitions.

The following definitions apply to assistance subject to this part 983, in addition to the definitions in § 982.3 of this chapter:

Agreement to enter into housing assistance payments contract (''Agreement''). A written agreement between the owner and the HA that, upon satisfactory completion of the new construction or the rehabilitation in accordance with requirements specified in the Agreement, the HA will enter into a HAP contract with the owner.

15-percent limit. Fifteen percent of the total number of budgeted units for an HA's Section 8 certificate program.

Funding source. The ACC funding authority from which the HAP contract is to be funded. Each funding increment identified in the ACC is a separate, potential funding source.

Percent limit. The applicable maximum number of budgeted units for an HA's certificate program that may be project-based. (The applicable percent limit is either the 15-percent limit or the 30-percent limit.)

Project-based Certificate (PBC) program. A Section 8 program administered by an HA pursuant to 24 CFR part 983.

Repair or replacement of a major building system or component. The complete electrical rewiring of a unit; the installation of new plumbing supply or waste pipes in a unit; the installation of a new heating distribution system, including piping and ductwork, or the installation of a new boiler or furnace; the installation of a new roof; or the replacement or major repair of exterior structural elements which are essential to achieve a stable general condition with no threat of further deterioration.

State certified appraiser. Any individual who satisfies the requirements for certification as a certified general appraiser in a State that has adopted criteria that currently meet or exceed the minimum certification criteria issued by the Appraiser Qualifications Board of the Appraisal Foundation. The State criteria must include a requirement that the individual have achieved a satisfactory grade upon a State-administered examination consistent with and equivalent to the Uniform State Certification Examination issued or endorsed by the Appraiser Qualifications Board of the Appraisal Foundation. Furthermore, if the Appraisal Foundation has issued a finding that the policies, practices, or procedures of the state are inconsistent with the Financial Institutions Reform, Recovery, and Enforcement Act of 1989, an individual must comply with any additional standards for state certified appraisers imposed by HUD under 24 CFR 267.11(c)(1).

30-Percent limit. Thirty percent of the total number of budgeted units for a HA's Section 8 certificate program.

§ 983.3 Information to be submitted to HUD by the HA concerning its plan to attach assistance to units.

(a) *Requirements.* An HA may attach certificate assistance to units in accordance with this part 983 if:

(1) The number of units to be project-based does not exceed the applicable percent limit.

(2) The number of units to be project-based are not under a tenant-based or project-based HAP contract or otherwise committed (e.g., certificates issued to families searching for housing or units under an Agreement).

(b) *Percent limit.* The applicable percent limit is either the 15-percent limit or the 30-percent limit. The 30-percent limit is only applicable if:

(1) There are no project-based new construction units in the HA's certificate program;

(2) The additional 15 percent of project-based units (in excess of the 15-percent limit) is for the rehabilitation of units in projects assisted under a State program that permits owners to prepay State-assisted or subsidized mortgages; and

(3) The additional 15 percent of project-based units is necessary to provide incentives for project owners to preserve the projects for occupancy by low and moderate income families for the term of the HAP contract, and assist low-income tenants to afford any rent increases.

(c) *HA notification to HUD of intent to attach assistance to units.* Before implementing a PBC program, the HA must submit the following information to the HUD field office for review:

(1) The total number of units for which the HA is requesting approval to attach assistance;

(2) The number of budgeted certificate units;

(3) The number of certificate units available to be project-based; i.e., the number of budgeted certificate units that are not under a tenant-based or project-based HAP contract or otherwise committed (e.g., certificates issued to families searching for housing or units under an Agreement).

§ 983.4 HUD review of HA plans to attach assistance to units.

(a) *Notice to HA.* (1) If the requirements of § 983.3 are satisfied, the field office must authorize the HA to proceed in accordance with this part 983.

(2) If the submission is approved, the field office must notify the HA that the HA may implement a PBC program subject to the requirements of this part 983, including the requirements for approval by the HUD field office of the HA unit selection policy and advertisement, and competitive selection of eligible units. The approval letter must specify the maximum number of units for which the HA may execute Agreements.

(3) If any of the requirements of § 983.3 are not satisfied, the field office must not approve the HA submission. The field office must notify the HA of the reasons for disapproval.

(b) [Reserved]

§ 983.5 Housing quality standards and construction standards.

Section 982.401, *Housing quality standards,* applies to assistance under this part. In addition, § 882.109 (m), (n), and (p) of this title apply.

§ 983.6 Site and neighborhood standards.

(a) *Rehabilitation site and neighborhood standards.* In addition to meeting the standards required in § 982.401(l) of this chapter, the proposed sites for rehabilitation units must meet the following site and neighborhood standards:

(1) Be adequate in size, exposure and contour to accommodate the number and type of units proposed; adequate utilities and streets must be available to service the site. (The existence of a private disposal system and private sanitary water supply for the site, approved in accordance with law, may be considered adequate utilities.)

(2) Be suitable from the standpoint of facilitating and furthering full compliance with the applicable provisions of Title VI of the Civil Rights Act of 1964, Title VIII of the Civil Rights Act of 1968, E.O. 11063, and HUD regulations issued pursuant thereto.

(3) Promote greater choice of housing opportunities and avoid undue concentration of assisted persons in areas containing a high proportion of low-income persons.

(4) Be accessible to social, recreational, educational, commercial, and health facilities and services, and other municipal facilities and services that are at least equivalent to those typically found in neighborhoods consisting largely of unassisted, standard housing of similar market rents.

(5) Be so located that travel time and cost via public transportation or private automobile from the neighborhood to places of employment providing a range of jobs for lower-income workers is not excessive. (While it is important that housing for the elderly not be totally isolated from employment opportunities, this requirement need not be adhered to rigidly for such projects.)

(b) *New construction site and neighborhood standards.* The proposed sites for new construction units must be approved by the HUD field office as meeting the following site and neighborhood standards:

(1) The site must be adequate in size, exposure, and contour to accommodate the number and type of units proposed, and adequate utilities (water, sewer, gas, and electricity) and streets must be available to service the site.

(2) The site and neighborhood must be suitable from the standpoint of facilitating and furthering full compliance with the applicable provisions of title VI of the Civil Rights Act of 1964, the Fair Housing Act, Executive Order 11063, and implementing HUD regulations.

(3)(i) The site must not be located in an area of minority concentration, except as permitted under paragraph (b)(3)(ii) of this section, and must not be located in a racially mixed area if the project will cause a significant increase in the proportion of minority to non-minority residents in the area.

(ii) A project may be located in an area of minority concentration only if:

(A) Sufficient, comparable opportunities exist for housing for minority families, in the income range to be served by the proposed project, outside areas of minority concentration (see paragraph (b)(3)(iii) of this section for further guidance on this criterion); or

(B) The project is necessary to meet overriding housing needs that cannot be met in that housing market area (see paragraph (b)(3)(iv) of this section for further guidance on this criterion).

(iii)(A) ''Sufficient'' does not require that in every locality there be an equal number of assisted units within and outside of areas of minority concentration. Rather, application of this standard should produce a reasonable distribution of assisted units each year, that, over a period of several years, will approach an appropriate balance of housing choices within and outside areas of minority concentration. An appropriate balance in any jurisdiction must be determined in light of local conditions affecting the range of housing choices available for low-income minority families and in relation to the racial mix of the locality's population.

(B) Units may be considered ''comparable opportunities'' if they have the same household type (elderly, disabled, family, large family) and tenure type (owner/renter); require approximately the same tenant contribution towards rent; serve the same income group; are located in the same housing market; and are in standard condition.

(C) Application of this sufficient, comparable opportunities standard involves assessing the overall impact of HUD-assisted housing on the availability of housing choices for low-income minority families in and outside areas of minority concentration, and must take into account the extent to which the following factors are present, along with other factors relevant to housing choice:

(*1*) A significant number of assisted housing units are available outside areas of minority concentration.

(*2*) There is significant integration of assisted housing projects constructed or rehabilitated in the past 10 years, relative to the racial mix of the eligible population.

(*3*) There are racially integrated neighborhoods in the locality.

(*4*) Programs are operated by the locality to assist minority families that wish to find housing outside areas of minority concentration.

(*5*) Minority families have benefited from local activities (*e.g.,* acquisition and write-down of sites, tax relief programs for homeowners, acquisitions of units for use as assisted housing units) undertaken to expand choice for minority families outside of areas of minority concentration.

(*6*) A significant proportion of minority households has been successful in finding units in non-minority areas under the Section 8 certificate and voucher programs.

(*7*) Comparable housing opportunities have been made available outside areas of minority concentration through other programs.

(iv) Application of the ''overriding housing needs'' criterion, for example, permits approval of sites that are an integral part of an overall local strategy for the preservation or restoration of the immediate neighborhood and of sites in a neighborhood experiencing significant private investment that is demonstrably changing the economic character of the area (a ''revitalizing area''). An ''overriding housing need,'' however, may not serve as the basis for determining that a site is acceptable if the only reason the need cannot otherwise be feasibly met is that discrimination on the basis of race, color, religion, sex, national origin, age, familial status or disability renders sites outside areas of minority concentration unavailable or if the use of this standard in recent years has had the effect of circumventing the obligation to provide housing choice.

(4) The site must promote greater choice of housing opportunities and avoid undue concentration of assisted persons in areas containing a high proportion of low-income persons.

(5) The neighborhood must not be one which is seriously detrimental to family life or in which substandard dwellings or other undesirable conditions predominate, unless there is actively in progress a concerted program to remedy the undesirable conditions.

(6) The housing must be accessible to social, recreational, educational, commercial, and health facilities and

services, and other municipal facilities and services that are at least equivalent to those typically found in neighborhoods consisting largely of unassisted, standard housing of similar market rents.

(7) Except for new construction housing designed for elderly persons, travel time and cost via public transportation or private automobile, from the neighborhood to places of employment providing a range of jobs for lower-income workers, must not be excessive.

§ 983.7 Eligible and ineligible properties and HA-owned units.

(a) Section 982.352 of this chapter, *Eligible Housing,* does not apply. Newly constructed and existing structures of various types may be appropriate for attaching assistance to the units under this part 983, including single-family housing and multifamily structures.

(b) An HA may not attach assistance under this part 983 to units in the following types of housing:

(1) Housing for which the construction is started before Agreement execution;

(2) Housing for which the rehabilitation is started before Agreement execution;

(3) Shared housing; nursing homes; and facilities providing continual psychiatric, medical, nursing services, board and care or intermediate care;

(4) Units within the grounds of penal, reformatory, medical, mental, and similar public or private institutions;

(5) Housing located in the Coastal Barrier Resources System designated under the Coastal Barrier Resources Act; or

(6) Housing located in an area that has been identified by the Federal Emergency Management Agency (FEMA) as having special flood hazards, unless:

(i)(A) The community in which the area is situated is participating in the National Flood Insurance Program (see 44 CFR parts 59 through 79); or

(B) Less than a year has passed since FEMA notification regarding such hazards; and

(ii) The HA will ensure that flood insurance on the structure is obtained in compliance with section 102(a) of the Flood Disaster Protection Act of 1973 (42 U.S.C. 4001 *et seq.*).

(7) A public housing or Indian housing unit.

(c) An HA may attach assistance under this part 983 to a highrise elevator project for families with children only if HUD determines there is no practical alternative. HUD may make this determination for an HA's project-based assistance, in whole or in part, and need not review each project on a case-by-case basis.

(d) An HA may attach assistance to units under this part 983 for use as single room occupancy (SRO) housing only if:

(1) The property is located in an area in which there is a significant demand for these units, as determined by the HUD field office;

(2) The HA and the unit of general local government in which the property is located approve the attaching of assistance to these units; and

(3) The HA and the unit of general local government certify to HUD that the property meets applicable local health and safety standards.

(e) Assistance may not be attached to a unit that is occupied by an owner; however, cooperatives are considered to be rental housing for purposes of this part 983.

(f) In no event may any occupant of a unit with project-based assistance under this part 983 receive the benefit of any of the following: any other form of Section 8 assistance, rent supplement, Section 23 housing assistance, or Section 236 ''deep subsidy'' rental assistance payments.

(g)(1) *HA-owned unit* means a unit (other than public housing) that is owned by the HA which administers the assistance under this part 983 pursuant to an ACC between HUD and the HA (including a unit owned by an entity substantially controlled by the HA).

(2) An HA-owned unit may only be assisted under the project-based certificate program if:

(i) The HA-owned unit is not ineligible housing under this section.

(ii) The HUD field office selects the HA-owned unit pursuant to the competitive ranking and rating process specified in the HA's HUD-approved unit selection policy (see § 983.51).

(iii) The HUD field office establishes the initial contract rents.

(iv) The HUD field office has conducted all HA reviews required under this part before execution of the Agreement.

(3) Any adjustment of the contract rent for an HA-owned unit must be approved in advance by the HUD field office.

(4) As owner of an HA-owned unit, the HA is subject to all of the same program requirements that apply to other owners in the program.

(5) HUD headquarters establishes the amount of the administrative fee for an HA-owned unit. The HA will earn a lower ongoing administrative fee for an HA-owned unit than for a unit not owned by the HA, and no fee for the cost to help a family experiencing difficulty in renting appropriate housing.

(6) HA-owned units are subject to the same requirements as units that are not HA-owned, including the ineligibility of units that are currently public or Indian housing and units constructed or rehabilitated with other assistance under the U.S. Housing Act of 1937.

§ 983.8 Rehabilitation: Minimum expenditure requirement.

(a) To qualify as rehabilitation under this part 983, existing structures must require a minimum expenditure of $1000 per assisted unit, including the unit's prorated share of work to be accomplished on common areas or systems, in order to:

(1) Upgrade the property to decent, safe, and sanitary condition to comply with the housing quality standards or other standards approved by HUD, from a condition below those standards;

(2) Repair or replace major building systems or components in danger of failure within two years from the date of the initial HA inspection;

(3) Convert or merge units to provide housing for large families; or

(4) For up to seven percent of the units to be assisted, make accessibility improvements to the property necessary to meet the requirements of Section 504 of the Rehabilitation Act of 1973 and the Fair Housing Amendments Act of 1988.

(b) In determining the minimum expenditure of $1000 per assisted unit, the HA must include the prorated cost of common improvements in the costs of the individual units.

§ 983.9 Prohibition against new construction or rehabilitation with U.S. Housing Act of 1937 assistance and use of flexible subsidy; pledge of Agreement or HAP contract.

(a) Assistance may not be attached to any unit which was in the five years before execution of the Agreement, or will be, constructed or rehabilitated with other assistance under the U.S. Housing Act of 1937 (*e.g.*, public housing (development or modernization), rental rehabilitation grants under 24 CFR part 511, housing development grants under 24 CFR part 850, or other Section 8 programs). In addition, a unit to which assistance is to be attached under this part 983 may not be rehabilitated with flexible subsidy assistance under part 219 of this title. HUD may approve attachment of assistance to a unit that was rehabilitated with public housing modernization funds before conveyance to a resident management corporation under section 21 of the U.S. Housing Act of 1937 (42 U.S.C. 1437s) if

attachment of project-based assistance would further the purposes of the sale of the public housing project to the corporation.

(b) If an owner is proposing to pledge the Agreement or HAP contract as security for financing, the owner must submit the financing documents to the HA. In determining the approvability of a pledge arrangement, the HA must review the documents submitted by the owner to ensure that the financing documents do not modify the Agreement or HAP contract, and do not contain any requirements inconsistent with the Agreement or HAP contract. Any pledge of the Agreement or HAP contract must be limited to amounts payable under the HAP contract in accordance with the terms of the HAP contract.

§ 983.10 Displacement, relocation, and acquisition.

(a) *Minimizing displacement.* (1) Consistent with the other goals and objectives of this part, an owner must assure that it has taken all reasonable steps to minimize the displacement of persons (households, businesses, nonprofit organizations, and farms) as a result of a rehabilitation project assisted under this part.

(2) Whenever a building or complex is rehabilitated and some, but not all, of the rehabilitated units will be assisted upon completion of the rehabilitation, the relocation requirements described in this section cover the occupants of each rehabilitated unit, whether or not Section 8 assistance will be provided for the unit.

(b) *Temporary relocation.* The following policies cover residential tenants who will not be required to move permanently but who must relocate temporarily for the project. Such tenants must be provided:

(1) Reimbursement for all reasonable out-of-pocket expenses incurred in connection with the temporary relocation, including the cost of moving to and from the temporary housing and any increase in monthly rent/utility costs;

(2) Appropriate advisory services, including reasonable advance written notice of:

(i) The date and approximate duration of the temporary relocation;

(ii) The location of the suitable, decent, safe and sanitary dwelling to be made available for the temporary period;

(iii) The terms under which the tenant may lease and occupy a suitable, decent, safe, and sanitary dwelling in the project upon completion of the project; and

(iv) The assistance required under paragraph (b)(1) of this section.

(c) *Relocation assistance for displaced persons.* A ''displaced person'' (defined in paragraph (g) of this section) must be provided relocation assistance at the levels described in, and in accordance with the requirements of, the Uniform Relocation Assistance and Real Property Acquisition Policies Act of 1970, as amended (URA) (42 U.S.C. 4201–4655) and implementing regulations at 49 CFR part 24. A ''displaced person'' must be advised of his/her rights under the Fair Housing Act (42 U.S.C. 3600–3620), and, if the representative comparable replacement dwelling used to establish the amount of the replacement housing payment to be provided to a minority is located in an area of minority concentration, such person must also be given, if possible, referrals to comparable and suitable, decent, safe, and sanitary replacement dwellings not located in such areas.

(d) *Real property acquisition requirements.* The acquisition of real property for a project is subject to the URA and the requirements of 49 CFR part 24, subpart B.

(e) *Appeals.* A person who disagrees with the HA's determination concerning whether the person qualifies as a ''displaced person,'' or the amount of relocation assistance for which the person is eligible, may file a written appeal of that determination with the HA. A person who is dissatisfied with the HA's determination on the appeal may submit a written request for review of that determination to the HUD field office responsible for administering the URA requirements in the jurisdiction.

(f) *Responsibility of HA.* (1) The HA must provide assurance of compliance as required by 49 CFR part 24 that it will comply with the URA, the regulations at 49 CFR part 24, and the requirements of this section, and must ensure such compliance notwithstanding any third party's contractual obligation to the HA to comply with these provisions.

(2) The cost of required relocation assistance may be paid for with funds provided by the owner, or with local public funds, or with funds available from other sources. The cost of HA advisory services for temporary relocation of tenants may be paid from preliminary fees or ongoing administrative fees.

(3) The HA must maintain records in sufficient detail to demonstrate compliance with the provisions of this section. The HA must maintain data on the race, ethnicity, gender, and disability of displaced persons.

(g) *Definition of displaced person.* (1) For purposes of this section, the term *displaced person* means a person (household, business, nonprofit organization, or farm) that moves from real property, or moves personal property from real property, permanently, as a direct result of acquisition, rehabilitation, or demolition for a project assisted under this part. The term ''displaced person'' includes, but may not be limited to:

(i) A person who moves permanently from the real property after receiving a notice from the owner requiring such move, if the move occurs on or after the date of the submission of the owner application to the HA;

(ii) A person who moves permanently before the submission of the owner application to the HA, if the HA or HUD determines that the displacement resulted directly from acquisition, rehabilitation, or demolition for the assisted project; or

(iii) A tenant-occupant of a dwelling unit who moves from the building or complex, permanently, after execution of the Agreement between the owner and the HA, if the move occurs before the tenant is provided written notice offering the opportunity to lease and occupy a suitable, decent, safe, and sanitary dwelling in the same building or complex under reasonable terms and conditions, upon completion of the project. Such reasonable terms and conditions include a monthly rent and estimated average monthly utility costs that do not exceed the greater of:

(A) The tenant's monthly rent before execution of the Agreement and estimated average monthly utility costs; or

(B) The total tenant payment, as determined under 24 CFR 813.107, if the tenant is low-income, or 30 percent of gross household income, if the tenant is not low-income; or

(iv) A tenant-occupant of a dwelling who is required to relocate temporarily, but does not return to the building or complex, if either:

(A) The tenant is not offered payment for all reasonable out-of-pocket expenses incurred in connection with the temporary relocation, including the cost of moving to and from the temporarily occupied unit and any increased housing costs; or

(B) Other conditions of the temporary relocation are not reasonable; or

(v) A tenant-occupant of a dwelling who moves from the building or complex permanently after he or she has been required to move to another dwelling unit in the same building or complex in order to carry out the rehabilitation or construction, if either:

(A) The tenant is not offered reimbursement for all reasonable out-of-pocket expenses incurred in connection with the move; or

(B) Other conditions of the move are not reasonable; or

(2) Notwithstanding the provisions of paragraph (g)(1) of this section, a person does not qualify as a ''displaced person'' (and is not eligible for relocation assistance under the URA or this section), if:

(i) The person has been evicted for serious or repeated violation of the terms and conditions of the lease or occupancy agreement, violation of applicable Federal, State or local law, or other good cause, and the HA determines that the eviction was not undertaken for the purpose of evading the obligation to provide relocation assistance;

(ii) The person moved into the property after the submission of the owner application to the HA and, before signing a lease and commencing occupancy, was provided written notice of the owner application, its possible impact on the person (e.g., the person may be displaced, temporarily relocated, or suffer a rent increase) and the fact that the person would not qualify as a ''displaced person'' (or for any assistance provided under this section) if the owner application is approved;

(iii) The person is ineligible under 49 CFR 24.2(g)(2); or

(iv) HUD determines that the person was not displaced as a direct result of acquisition, rehabilitation, or demolition for the project.

(3) The HA may request, at any time, HUD's determination of whether a displacement is or would be covered by this section.

(h) *Definition of initiation of negotiations.* For purposes of determining the formula for computing a replacement housing payment to be provided to a residential tenant displaced as a direct result of privately undertaken rehabilitation or demolition of the real property, the term ''initiation of negotiations'' means the execution of the Agreement between the owner and the HA.

§ 983.11 Other Federal requirements.

(a) *Equal Opportunity and related requirements.* Participation in this program requires compliance with the Equal Opportunity requirements specified in § 982.53 of this chapter including Section 504 of the Rehabilitation Act of 1973 (24 CFR part 8) and the Fair Housing Amendments Act of 1988 (24 CFR part 100).

(b) *Environmental requirements.* Activities under this part 983 are subject to HUD environmental regulations at 24 CFR part 58. An HA may not attach assistance to a unit unless, before the HA enters into an Agreement to provide project-based assistance for the unit:

(1) The unit of general local government within which the project is located that exercises land use responsibility or, as determined by HUD, the county or State has completed the environmental review required by 24 CFR part 58 and provided to the HA for submission to HUD the completed request for release of funds and certification; and

(2) HUD has approved the request for release of funds.

(c) *Other Federal requirements.* The following requirements must be met, if applicable:

(1) Clean Air Act and Federal Water Pollution Control Act;

(2) Flood Disaster Protection Act of 1973;

(3) Section 3 of the Housing and Urban Development Act of 1968 (12 U.S.C. 1701u) and the regulations in 24 CFR part 135;

(4) Executive Order 11246, Equal Employment Opportunity (for all construction contracts of over $10,000);

(5) Executive Order 11625, Prescribing Additional Arrangements for Developing and Coordinating a National Program for Minority Business Enterprises;

(6) Executive Orders 12432, Minority Business Enterprise Development, and 12138, Creating a National Women's Business Enterprise Policy; and

(7) Payment of not less than the wages prevailing in the locality, as predetermined by the Secretary of Labor pursuant to the Davis-Bacon Act, to all laborers and mechanics employed in the construction or rehabilitation of the project under an Agreement covering nine or more assisted units, and compliance with the Contract Work Hours and Safety Standards Act, Department of Labor regulations in 29 CFR part 5, and other Federal laws and regulations pertaining to labor standards applicable to such an Agreement.

(8) The provisions of part 24 of this title relating to the employment, engagement of services, awarding contracts, or funding of any contractors or subcontractors during any period of debarment, suspension, or placement in ineligibility status.

§ 983.12 Initial contract rents.

(a) *General.* Section 882.714 of this title, Initial contract rents, applies to the Section 8 PBC Program.

(b) *HA, HUD or Housing Credit Agency establishment of the initial contract rents.* (1) The HA establishes the initial contract rents for PBC units that are neither HA-owned nor financed with a HUD insured or coinsured mortgage. The HA must contract with a state certified general appraiser who has no interest, direct or indirect, with the property. The appraiser will submit for the HA's review and approval a Form HUD–92273, Estimates of Market Rent by Comparison, for each unit type using comparable unsubsidized market-rate rental properties. In developing the rental estimates, the appraiser must not consider the proposed Section 8 assistance or any other Federal, state or local rent subsidies. The HA must certify that the initial contract rents are reasonable and not in excess of rents being charged for comparable unassisted units.

(2) The HUD field office approves the initial contract rents for HA-owned PBC units and projects financed with a HUD insured or coinsured multifamily mortgage.

(3) HUD or a Housing Credit Agency may reduce the initial contract rents as a result of a subsidy layering review.

§ 983.13 Annual contract rent adjustments.

Section 882.715 (a)(1) and (b) of this title apply to the Section 8 PBC Program.

§ 983.14 Special contract rent adjustments.

Section 882.715 (a)(2) and (b) of this title apply to the Section 8 PBC Program.

Subpart B—Owner Application Submission to Agreement

§ 983.51 HA unit selection policy, advertising, and owner application requirements.

(a) *General.* The HA must adopt a written policy establishing competitive procedures for owner submission of applications and for HA selection of units to which assistance is to be attached and must submit the policy to the HUD field office for review and approval. The HA must select units in accordance with its approved selection policy. The HA's written selection policy must comply with the requirements of paragraph (b) of this section.

(b) *Advertising requirements.* The HA must advertise in a newspaper of general circulation that the HA will accept applications for assistance under this part 983 for specific projects. The advertisement must be approved by the HUD field office and may not be published until after the later of HUD authorization to implement a project-based program or ACC execution. The

advertisement must: be published once a week for three consecutive weeks; specify an application deadline of at least 30 days after the date the advertisement is last published; specify the number of units the HA estimates it will be able to assist under the funding the HA is making available for this purpose; and state that only applications submitted in response to the advertisement will be considered.

(c) *Selection policy requirements.* The HA's written selection policy must identify, and specify the weight to be given to, the factors the HA will use to rank and select applications. These factors must include consideration of: site; design; previous experience of the owner and other participants in development, marketing, and management; and feasibility of the project as a whole (including likelihood of financing and marketability). The HA may add other factors, such as responsiveness to local objectives specified by the HA.

(d) *Owner application.* The owner's submission to the HA of applications containing:

(1) A description of the housing to be constructed or rehabilitated, including the number of units by size (square footage), bedroom count, bathroom count, sketches of the proposed new construction or rehabilitation, unit plans, listing of amenities and services, and estimated date of completion. For rehabilitation, the description must describe the property as is, and must also describe the proposed rehabilitation;

(2) Evidence of site control, and for new construction identification and description of the proposed site, site plan and neighborhood;

(3) Evidence that the proposed new construction or rehabilitation is permitted by current zoning ordinances or regulations or evidence to indicate that the needed rezoning is likely and will not delay the project;

(4) The proposed contract rent per unit, including an indication of which utilities, services, and equipment are included in the rent and which are not included. For those utilities that are not included in the rent, an estimate of the average monthly cost for each unit type for the first year of occupancy;

(5) A statement identifying:

(i) The number of persons (families, individuals, businesses and nonprofit organizations) occupying the property on the date of the submission of the application;

(ii) The number of persons to be displaced, temporarily relocated or moved permanently within the building or complex;

(iii) The estimated cost of relocation payments and services, and the sources of funding; and

(iv) The organization(s) that will carry out the relocation activities;

(v) The identity of the owner and other project principals and the names of officers and principal members, shareholders, investors, and other parties having a substantial interest; certification showing that the above-mentioned parties are not on the U.S. General Services Administration list of parties excluded from Federal procurement and nonprocurement programs; a disclosure of any possible conflict of interest by any of these parties that would be a violation of the Agreement or the HAP contract; and information on the qualifications and experience of the principal participants. Information concerning any participant who is not known at the time of the owner's submission must be provided to the HA as soon as the participant is known;

(vi) The owner's plan for managing and maintaining the units;

(vii) Evidence of financing or lender interest and the proposed terms of financing;

(viii) The proposed term of the HAP contract; and

(ix) Such other information as the HA believes necessary.

(e) *Resident management corporation competitive selection exception.* An HA may select units to which assistance is to be attached, without advertising under paragraph (b) of this section and without applying the selection factors otherwise required by paragraph (c) of this section, if attachment of project-based assistance would further the purposes of the sale of a public housing project to a resident management corporation under section 21 of the U.S. Housing Act of 1937 (42 U.S.C. 1437s).

§ 983.52 Rehabilitation: Initial inspection and determination of unit eligibility.

(a) Before selecting a unit or executing an Agreement, the HA must determine that the application is responsive to and in compliance with the HA's written selection criteria and procedures, and is otherwise in conformity with HUD program regulations and requirements. For example, the owner must submit with the application evidence of site control and the certification required by § 983.51(d)(5)(v). The HA must determine that the proposed initial gross rents are within the fair market rent limitation under § 882.714 of this title. The HA must inspect the property to determine that rehabilitation has not begun and that the property meets the $1000 per assisted unit rehabilitation requirement under § 982.8 of this chapter. If the property meets this rehabilitation requirement, the HA must determine the specific work items that are needed to bring each unit to be assisted up to the housing quality standards specified in § 983.5 (or other standards as approved in the HA's application), to complete any other repairs needed to meet the $1000 per assisted unit rehabilitation requirement and, in the case of projects of five or more units, any work items necessary to meet the accessibility requirements of Section 504 of the Rehabilitation Act of 1973.

(b) Before selecting a unit or executing an Agreement, the HA must also consider whether the property is eligible housing under § 983.7; meets the other Federal requirements in § 983.11 and the site and neighborhood standards cross-referenced in § 983.6; and will be rehabilitated with other than assistance under the U.S. Housing Act of 1937 in accordance with § 983.9. The HA must also determine the number of current tenants that are low-income families. An HA may not select a unit, or enter into an Agreement with respect to a unit, if the unit is occupied by persons who are not eligible for participation in the program.

(c) Before executing an Agreement, the HA must contract with a State certified general appraiser and establish the rents in accordance with § 983.12, or seek and obtain the HUD-determined initial contract rents for any HA owned or controlled units or projects financed with a HUD insured or coinsured multifamily mortgage; obtain subsidy layering contract rent reviews from HUD or a Housing Credit Agency; obtain environmental clearance in accordance with § 983.11; submit a certification to the HUD field office stating that the unit or units were selected in accordance with the HA's approved unit selection policy; and receive approval from the HUD field office to execute an Agreement pursuant to the reviews required in § 983.53.

(d) When the HA administering the ACC or an entity substantially controlled by the HA administering the ACC has submitted an application, the HUD field office will select the owner applications. The HA must submit to the HUD field office all owner applications in response to the advertisement.

(e) The HUD field office may terminate the Agreement or HAP contract upon at least 30 days written notice to the owner by the HUD field office if the HUD field office determines at any time that the units were not selected in accordance with the HA's

approved written selection policy or that the units did not initially meet the HUD eligibility requirements.

§ 983.53 Rehabilitation: HUD field office review of applications.

(a) The HUD field office must establish initial contract rents for any HA owned units or projects financed with a HUD insured or coinsured multifamily mortgage. HUD (or a Housing Credit Agency) must also conduct subsidy layering contract rent reviews.

(b) When the HA administering the ACC or an entity substantially controlled by the HA administering the ACC has submitted an application, the HA must submit to the HUD field office all owner applications in response to the advertisement. The HUD field office must review the owner applications and make the final selections based on the criteria in the HA selection policy approved by the HUD field office.

§ 983.54 Rehabilitation: Work write-ups.

The owner must prepare work write-ups and, where determined necessary by the HA, specifications and plans. The HA has flexibility to determine the appropriate documentation to be submitted by the owner based on the nature of the identified rehabilitation. The work write-ups must address the specific work items identified by the HA under § 983.52.

§ 983.55 New construction: HA evaluation and technical processing.

(a) Before selecting a unit or executing an Agreement, the HA must determine that the application is responsive to and in compliance with the HA's written selection criteria and procedures, and is otherwise in conformity with HUD program regulations and requirements. For example, the owner must submit with the application evidence of site control and the certification required by § 983.51(d)(5)(v). The HA must determine that construction (foundation work) has not begun. The HA must determine that the proposed initial gross rents are within the fair market rent limitation under § 983.12. The HA must also consider whether the property is eligible housing within the meaning of § 983.7; meets the other Federal requirements in § 983.11 and the site and neighborhood standards in § 983.6; will be constructed with other than assistance under the U.S. Housing Act of 1937 in accordance with § 983.9; and, in the case of projects of four or more units, whether any work items necessary to meet the accessibility requirements of Section 504 of the Rehabilitation Act of 1973 and the Fair Housing Amendments Act of 1988 will be completed.

(b) Before executing an Agreement, the HA must contract with a State certified general appraiser and establish the rents in accordance with § 983.12 or seek and obtain the HUD-determined initial contract rents for any HA owned or controlled units or projects financed with a HUD insured or coinsured multifamily mortgage; seek and obtain subsidy layering contract rent reviews from HUD or a Housing Credit Agency; seek and obtain environmental clearance in accordance with § 983.11; and receive approval from the HUD field office to execute an Agreement pursuant to the reviews required in § 983.56.

(c) If the HA administering the ACC or an entity substantially controlled by the HA administering the ACC has submitted an application, the HA must submit to the HUD field office all owner applications in response to the advertisement. The HUD field office will select the owner applications to be funded from the applications received in response to the HA advertisement.

(d) If there are no HA-owned or controlled applicants, the HA must submit to the HUD field office for the site and neighborhood review only those applications determined by the HA to be eligible for further processing pursuant to paragraph (a) of this section, and must submit a certification to the HUD field office stating that the unit or units were selected in accordance with the HA's approved unit selection policy. The HA's submission must not exceed the number of uncommitted units for which the HA is authorized to project-base assistance in connection with new construction. If the number of units contained in applications the HA has determined to be eligible for further processing exceeds the number for which the HA is authorized to project-base assistance, the HA may submit only the top-ranked applications.

(e) The HUD field office may terminate the Agreement or HAP contract upon at least 30 days written notice to the owner by HUD if the HUD field office determines that the units were not selected in accordance with the HA's approved written selection policy or that the units did not initially meet the HUD eligibility requirements.

§ 983.56 New construction: HUD field office review of applications.

(a) The HUD field office must review the owner applications submitted by an HA to determine compliance with requirements concerning the site and neighborhood standards in § 983.6.

(b) The HUD field office must establish initial contract rents for any HA owned units or projects financed with a HUD insured or coinsured multifamily mortgage. HUD (or a Housing Credit Agency) must also conduct subsidy layering contract rent reviews.

(c) When the HA administering the ACC or an entity substantially controlled by the HA administering the ACC has submitted an application, the HA must submit to the HUD field office all owner applications in response to the advertisement. The HUD field office must review the owner applications and make the final selections based on the criteria in the HA selection policy approved by the HUD field office.

§ 983.57 New construction: Working drawings and specifications.

Before an Agreement is executed for new construction units, the owner must submit the design architect's certification that the proposed new construction reflected in the working drawings and specifications complies with housing quality standards, local codes and ordinances, and zoning requirements.

Subpart C—Agreement and New Construction or Rehabilitation Period

§ 983.101 Agreement to enter into HAP contract, and contract rents in Agreement.

(a) *Agreement.* The HA must enter into an Agreement with the owner in the form prescribed by HUD for assistance provided under this part 983. The Agreement must be executed before the start of any new construction or rehabilitation. Under the Agreement, the owner agrees to construct the units in accordance with the HA-approved working drawings and specifications or to rehabilitate the units in accordance with the HA-approved work write-ups.

(b) *Contract rents in Agreement.* The Agreement must list the initial contract rents that will apply to the units after they are constructed or rehabilitated. The amounts of the contract rents that are listed in the Agreement or, if applicable, as lowered under § 983.103(c), must be the initial contract rents upon execution of the HAP contract. These initial contract rents may only be increased if:

(1) The project is financed with a HUD insured or coinsured multifamily mortgage;

(2) The initial contract rents listed in the Agreement were based on the amount determined by HUD to be necessary to amortize the insured or coinsured mortgage; and

(3) The HUD field office approves a cost increase prior to closing. In such a

case, the HUD field office may redetermine the initial contract rents in accordance with § 983.12 except that the field office may use the comparable rents originally used in processing the insured or coinsured mortgage in lieu of the amount determined in accordance with § 983.12.

§ 983.102 Owner selection of contractor.

The owner is responsible for selecting a competent contractor to undertake the new construction or rehabilitation work under the Agreement. The owner may not award contracts to, otherwise engage the services of, or fund any contractor or subcontractor, to perform such work, that fails to provide a certification that neither it nor its principals is presently debarred, suspended, or placed in ineligibility status under 24 CFR part 24, or is on the list of ineligible contractors or subcontractors established and maintained by the Comptroller General under 29 CFR part 5. The HA must promote opportunities for minority contractors to participate in the program.

§ 983.103 New construction or rehabilitation period.

(a) *Timely performance of work.* After the Agreement has been executed, the owner must promptly proceed with the construction or rehabilitation work as provided in the Agreement. In the event the work is not so commenced, diligently continued, or completed, the HA may terminate the Agreement or take other appropriate action.

(b) *Inspections.* The HA must inspect during construction or rehabilitation to ensure that work is proceeding on schedule and is being accomplished in accordance with the terms of the Agreement. The inspection must be carried out to ensure that the work meets the types of materials specified in the work write-ups or working drawings and specifications, and meets typical levels of workmanship in the area.

(c) *Changes.* The owner must obtain prior HA approval for any changes from the work specified in the Agreement that would alter the design or the quality of the required new construction or rehabilitation. The HA may disapprove any changes requested by the owner. HA approval of changes may be conditioned on establishing lower initial contract rents in the amount determined by the HA (or the HUD field office for HA owned units or projects financed with a HUD insured or coinsured multifamily mortgage). If the owner makes any changes without prior HA approval, the HA may lower the initial contract rents in the amount determined by the HA (or the HUD field office for HA owned units or projects financed with a HUD insured or coinsured multifamily mortgage), and may require the owner to remedy any deficiencies, prior to, and as a condition for, acceptance of the units. Initial contract rents, however, must not be increased because of any change from the work specified in the Agreement as originally executed. When a HUD insured or a HUD coinsured multifamily mortgage is used to finance new construction or rehabilitation of the units to which assistance is to be attached under this part 983, the HUD field office may lower the initial contract rents to reflect any reduction in the amount necessary to amortize the insured or coinsured mortgage.

(d) *Notification of vacancies.* At least 60 days before the scheduled completion of the new construction or rehabilitation, the owner must notify the HA of any units expected to be vacant on the anticipated effective date of the HAP contract. The HA must refer to the owner appropriate-sized families from the HA waiting list. When the HAP contract is executed, the owner must notify the HA which units are vacant. (See also § 983.203).

§ 983.104 New construction or rehabilitation completion.

(a) Notification of completion. The owner must notify the HA when the work is completed and submit to the HA the evidence of completion described in paragraph (b) of this section.

(b) *Evidence of completion.* To demonstrate completion of the work the owner must furnish the HA with:

(1) A certificate of occupancy or other official approvals as required by the locality.

(2) A certification by the owner that:

(i) The work has been completed in accordance with the requirements of the Agreement;

(ii) There are no defects or deficiencies in the work except for items of delayed completion which are minor or which are incomplete because of weather conditions and, in any case, do not preclude or affect occupancy;

(iii) The unit(s) has been constructed or rehabilitated in accordance with the applicable zoning, building, housing and other codes, ordinances or regulations, as modified by any waivers obtained from the appropriate officials;

(iv) Unit(s) built before 1978 is in compliance with § 982.401(j) (*Lead-based paint*); and

(v) The owner has complied with any applicable labor standards requirements in the Agreement.

(3) For projects where a HUD field office construction inspection is not required during construction, a certification from the inspecting architect stating that the units have been constructed in accordance with the certified working drawings and specifications, housing quality standards, local codes and ordinances, and zoning requirements.

(c) *Review and inspections.* The HA must review the evidence of completion for compliance with paragraph (b) of this section. The HA also must inspect the unit(s) to be assisted to determine that the unit(s) has been completed in accordance with the Agreement, including meeting the housing quality standards or other standards approved by the HUD field office for the program. If the inspection discloses defects or deficiencies, the inspector must report these in detail.

(d) *Acceptance.* (1) If the HA determines from the review and inspection that the unit(s) has been completed in accordance with the Agreement, the HA must accept the unit(s).

(2) If there are any items of delayed completion that are minor items or that are incomplete because of weather conditions, and in any case that do not preclude or affect occupancy, and all other requirements of the Agreement have been met, the HA may accept the unit(s). The HA must require the owner to deposit in escrow with the HA funds in an amount the HA determines to be sufficient to ensure completion of the delayed items. The HA and owner must also execute a written agreement, specifying the schedule for completion of these items. If the items are not completed within the agreed time period, the HA may terminate the HAP contract or exercise other rights under the HAP contract.

(3) If other deficiencies exist, the HA must determine whether and to what extent the deficiencies are correctable and whether a time extension is warranted, and HUD must determine whether the contract rents should be reduced.

(4) Otherwise, the unit(s) may not be accepted, and the owner must be notified with a statement of the reasons for nonacceptance.

Subpart D—Housing Assistance Payments Contract

§ 983.151 Housing assistance payments contract (HAP contract).

(a) *Required form.* The HA must enter into a HAP contract with the owner in the form prescribed by HUD for assistance provided under this part 983.

(b) *Term of HAP contract.* (1) The initial HAP contract term may not be

less than one year nor more than five years, and may not extend beyond the ACC expiration date for the funding source from which the HAP contract is to be funded.

(2) The contract authority for the funding source must exceed the estimated annual housing assistance payments for all tenant-based and project-based HAP contracts funded from the funding source.

(3) Within these limitations, the HA has the sole discretion to determine the HAP contract term. For example, assuming that the ACC expiration date for the applicable funding source is June 30, 1999, and the effective date of a HAP contract will be July 1, 1995, the HAP contract could have a fixed term of 1 to 4 years.

(c) *Renewal of HAP contracts.* With HUD field office approval and at the sole option of the HA, HAs may renew expiring HAP contracts for such period or periods as the HUD field office determines appropriate to achieve long-term affordability of the assisted housing, provided that the term does not extend beyond the ACC expiration date for the funding source. HAs must identify the funding source for renewals; different funding sources may be used for the initial term and renewal terms of the HAP contract. In addition to assessing whether the HAP contract should be renewed to achieve long term affordability, HUD will review an HA's renewal request to determine that the requirements listed in § 983.3(a) will be satisfied, and to determine if a rent reduction is warranted pursuant to 24 CFR part 12. The owner and owner's successors in interest must accept all HAP contract renewals agreed to by the HA and approved by HUD.

(d) *Time of execution.* The HA must execute the HAP contract if the HA accepts the unit(s) under § 983.104. The effective date of the HAP contract may not be earlier than the date of HA inspection and acceptance of the unit(s).

(e) *Units under lease.* After commencement of the HAP contract term, the HA must make the monthly housing assistance payments in accordance with the HAP contract for each unit occupied under lease by a family.

§ 983.152 Reduction of number of units covered by HAP contract.

(a) *Limitation on leasing to ineligible families.* Owners must lease all assisted units under HAP contract to eligible families. Leasing of vacant, assisted units to ineligible tenants is a violation of the HAP contract and grounds for all available legal remedies, including suspension or debarment from HUD programs and reduction of the number of units under the HAP contract, as set forth in paragraph (b) of this section. Once the HA has determined that a violation exists, the HA must notify the HUD field office of its determination and the suggested remedies. At the direction of the HUD field office, the HA must take the appropriate action.

(b) *Reduction for failure to lease to eligible families.* If, at any time beginning 180 calendar days after the effective date of the HAP contract, the owner fails for a period of 180 continuous calendar days to have the assisted units leased to families receiving housing assistance or to families who were eligible when they initially leased the unit but are no longer receiving housing assistance, the HA may, on at least 30 calendar days notice, reduce the number of units covered by the HAP contract. The HA may reduce the number of units to the number of units actually leased or available for leasing by eligible families plus 10 percent (rounded up). If the owner has only one unit under HAP contract and if one year has elapsed since the date of the last housing assistance payment, the HAP contract may be terminated with the consent of the owner.

(c) *Restoration.* The HA will agree to an amendment of the HAP contract to provide for subsequent restoration of any reduction made pursuant to paragraph (b) of this section if:

(1) The HA determines that the restoration is justified by demand,

(2) The owner otherwise has a record of compliance with obligations under the HAP contract; and

(3) Contract authority is available.

Subpart E—Management

§ 983.201 Responsibilities of the HA.

Section 982.153 of this chapter, *HA Responsibilities*, applies, except for § 982.153(b)(7) of this chapter, where it pertains to the HA issuing a voucher or certificate to each selected family and providing housing information to families selected, and § 982.153(b)(9) of this chapter. The HA must also:

(a) Brief the family in accordance with § 983.203(d);

(b) Obtain requests for participation from owners, and select projects;

(c) Approve contract rent adjustments, and make rent reasonableness determinations for units which are not HA owned;

(d) Inspect the project before, during, and upon completion of, new construction or rehabilitation; and

(e) Ensure that the amount of assistance that is attached to units is within the amounts available under the ACC.

§ 983.202 Responsibilities of the owner.

Section 982.452 of this chapter, *Owner responsibilities*, applies. The owner is also responsible for performing all of the owner responsibilities under the Agreement and the HAP contract, disclosing information and submitting certifications as required by 24 CFR part 12 and implementing instructions, providing the HA with a copy of any termination of tenancy notification, and offering vacant, accessible units to a Family with one or more members with a disability requiring that accessibility features of the vacant unit and occupying an assisted unit not having such features.

§ 983.203 Family participation.

Subpart E of part 982 of this chapter, *Selection for Tenant-based Program*, does not apply, except as it is expressly made applicable by this section.

(a) *HA selection for participation.* (1) The following provisions apply to this part: §§ 982.201, 982.202 except paragraph (b)(3), 982.203, 982.204 except paragraph (a) and (d), 982.205 except paragraph (a), 982.206, 982.207 except (b)(1), and 982.208 through 982.213 of this chapter.

(2) For purposes of this part, a family becomes a participant when the family and owner execute a lease for a unit with project-based assistance.

(3) An HA may use the tenant-based waiting list, a merged waiting list, or a separate PBC waiting list for admission to the PBC program. If the HA opts to have a separate PBC waiting list, the HA may use a single waiting list for all PBC projects, or may use a separate PBC waiting list for an area not smaller than a county or municipality.

(4) Except for special admissions and admissions pursuant to paragraph (c)(3) of this section, participants must be selected from the HA waiting list. The HA must select participants from the waiting list in accordance with admission policies in the HA administrative plan.

(5) *Local preference limit* means 30 percent of total annual waiting list admissions to an HA's PBC program (including admissions pursuant to paragraph (c)(3) of this section). In any year, the number of families given preference in admission to the HA PBC program pursuant to a local preference over families with a federal preference may not exceed the local preference limit.

(6) Has authorized to use the 30-percent limit to prevent prepayments under State mortgage programs must not

count families selected to occupy units in these State-assisted or subsidized projects against the local preference limit.

(7) The selection of eligible in-place families does not count against the local preference limit.

(b) *HA determination of eligibility of in-place families.* Before an HA selects a specific unit to which assistance is to be attached, the HA must determine whether the unit is occupied, and if occupied, whether the unit's occupants are eligible for assistance. If the unit is occupied by an eligible family (including a single person) and the HA selects the unit, the family must be afforded the opportunity to lease that unit or another appropriately sized, project-based assisted unit in the project without requiring the family to be placed on the waiting list. (The HA is authorized, under § 812.3(b)(1) of this chapter and consistent with other applicable requirements of § 812.3, to permit occupancy of the project by single persons residing in the project at the time of conversion to project-based assistance to prevent displacement.) An HA may not select a unit, or enter into an Agreement with respect to a unit, if the unit is occupied by persons who are not eligible for participation in the program.

(c) *Filling vacant units.* (1) When the owner notifies the HA of vacancies in the units to which assistance is attached, the HA will refer to the owner one or more families of the appropriate size on its waiting list. A family that refuses the offer of a unit assisted under this part 983 keeps its place on the waiting list.

(2) The owner must rent all vacant units to eligible families referred by the HA from its waiting list. The HA must determine eligibility for participation in accordance with HUD requirements.

(3) If the HA does not refer a sufficient number of interested applicants on the HA waiting list to the owner within 30 days of the owner's notification to the HA of a vacancy, the owner may advertise for or solicit applications from eligible very low-income families, or, if authorized by the HA in accordance with HUD requirements, low-income families. The owner must refer these families to the HA to determine eligibility.

(4)(i) The owner is responsible for screening and selection of tenants. The owner must adopt written tenant selection procedures that are consistent with the purpose of improving housing opportunities for very low-income families, and reasonably related to program eligibility and an applicant's ability to perform the lease obligations.

(ii)(A) An owner must promptly notify in writing any rejected applicant of the grounds for any rejection.

(B) If the owner rejects an applicant family who believes that the rejection was the result of unlawful discrimination, the family may request the assistance of the HA in resolving the issue. The family may also file a discrimination complaint with the HUD field office or exercise other rights provided by law.

(d) *Briefing of families.* When a family is selected to occupy a project-based unit, the HA must provide the family with information concerning the tenant rent and any applicable utility allowance and a copy of the HUD-prescribed lead-based paint brochure. The family must also, either in group or individual sessions, be provided with a full explanation of the following:

(1) Family and owner responsibilities under the lease and HAP contract;

(2) Information on Federal, State, and local equal opportunity laws;

(3) The fact that the subsidy is tied to the unit, that the family must occupy a unit constructed or rehabilitated under the program, and that a family that moves from the unit does not have any right to continued assistance;

(4) The likelihood of the family receiving a certificate after the HAP contract expires;

(5) The family's options under the program, if the family is required to move because of a change in family size or composition;

(6) Information on the HA's procedures for conducting informal hearings for participants, including a description of the circumstances in which the HA is required to provide the opportunity for an informal hearing (under § 983.208), and of the procedures for requesting a hearing.

(e) *Continued assistance for a family when the HAP contract is terminated.* If the HAP contract for the unit expires or if the HA terminates the HAP contract for the unit:

(1) The HA must issue the assisted family in occupancy of a unit a certificate of family participation for assistance under the HA's certificate program unless the HA has determined that it does not have sufficient funding for continued assistance for the family, or unless the HA denies issuance of a certificate in accordance with § 982.552 of this chapter.

(2) If the unit is not occupied by an assisted family, then the available funds under the ACC that were previously committed for support of the project-based assistance for the unit must be used for the HA's certificate program.

(f) *Amount of rent payable by family to owner.* The amount of rent payable by the Family to the owner must be the Tenant Rent.

(g) *Lease requirements.* (1) The lease between the family and the owner must be in accordance with § 983.207 and any other applicable HUD regulations and requirements. The lease must include all provisions required by HUD and must not include any of the provisions prohibited by HUD.

(2) When offering an accessible unit to an applicant not having disabilities requiring the accessibility features of the unit, the owner may require the applicant to agree (and may incorporate this agreement in the Lease) to move to a non-accessible unit when available.

§ 983.204 Maintenance, operation and inspections.

(a) Section 982.404 of this chapter, *Maintenance: Owner and family responsibility; HA remedies,* pertaining to owner responsibilities and HA remedies, does not apply. Section 982.405 of this chapter, *HA periodic unit inspection,* and § 982.406 of this chapter, *Enforcement of HQS,* do not apply.

(b) *Maintenance and operation.* The owner must provide all the services, maintenance and utilities as agreed under the HAP contract, subject to abatement of housing assistance payments or other applicable remedies if the owner fails to meet these obligations.

(c) *Periodic inspection.* In addition to the inspections required prior to execution of the HAP contract, the HA must inspect or cause to be inspected each dwelling unit under HAP contract at least annually and at such other times as may be necessary to assure that the owner is meeting the obligations to maintain the unit in decent, safe and sanitary condition and to provide the agreed upon utilities and other services. The HA must take into account complaints and any other information coming to its attention in scheduling inspections.

(d) *Units not decent, safe and sanitary.* If the HA notifies the owner that the unit(s) under HAP contract are not being maintained in decent, safe and sanitary condition and the owner fails to take corrective action within the time prescribed in the notice, the HA may exercise any of its rights or remedies under the HAP contract, including abatement of housing assistance payments (even if the family continues in occupancy), termination of the HAP contract on the affected unit(s) and termination of assistance to the family

in accordance with § 982.552 of this chapter.

§ 983.205 Reexamination of family income and composition.

(a) Section 882.212 of this title, *Reexaminations of family income and composition,* does not apply.

(b) *Regular and interim reexaminations.* (1) The HA must reexamine the income and composition of all families at least once every 12 months. After consultation with the family and upon verification of the information, the HA must make appropriate adjustments in the total tenant payment in accordance with part 813 of this title and determine whether the family's unit size is still appropriate (see § 982.402 of this chapter). The HA must adjust tenant rent and the housing assistance payment to reflect any change in total tenant payment.

(2) The family must supply any information requested by the HA or HUD concerning changes in income. If the HA receives information concerning a change in the family's income or other circumstances between regularly scheduled reexaminations, the HA must consult with the family and make any adjustments determined to be appropriate. Any change in the family's income or other circumstances that results in an adjustment in the total tenant payment, tenant rent, and housing assistance payment must be verified.

(3) The family must disclose and verify social security numbers (as provided by 24 CFR part 750) and must sign and submit consent forms for obtaining information in accordance with 24 CFR part 760 and 24 CFR part 813.

(c) *Continuation of housing assistance payments.* A family's eligibility for housing assistance payments shall continue until the total tenant payment equals the gross rent. The termination of eligibility at such point will not affect the family's other rights under its lease, nor will such termination preclude the resumption of payments as a result of later changes in income, rents, or other relevant circumstances during the term of the HAP contract. However, eligibility also may be terminated in accordance with HUD requirements for such reasons as failure to submit requested verification information.

§ 983.206 Overcrowded and underoccupied units.

(a) Section 982.403(a)(2) of this chapter, *Termination of HAP contract: violation of HQS space standards*; § 982.403(b) of this chapter, *Certificate program only: Termination of HAP contract—subsidy too big for family size*; and § 982.403(c) of this chapter, *Termination,* do not apply.

(b) If the HA determines that a contract unit is not decent, safe, and sanitary because of an increase in family size that causes the unit to be overcrowded or that a contract unit is larger than appropriate for the size of the family in occupancy under the HA's subsidy standards, housing assistance payments with respect to the unit may not be terminated for this reason. The owner, however, must offer the family a suitable alternative unit if one is available and the family shall be required to move. If the owner does not have available a suitable unit within the family's ability to pay the rent, the HA (if it has sufficient funding) must offer Section 8 assistance to the family or otherwise assist the family in locating other standard housing in the HA's jurisdiction within the family's ability to pay, and require the family to move to such a unit as soon as possible. The family must not be forced to move, nor shall housing assistance payments under the HAP contract be terminated for the reasons specified in this paragraph, unless the family rejects, without good reason, the offer of a unit that the HA judges to be acceptable.

§ 983.207 Assisted tenancy and termination of tenancy.

(a) Section 982.309 of this chapter, *Term of assisted tenancy,* and § 982.310 of this chapter, *Owner termination of tenancy,* do not apply.

(b) *Term of lease.* The term of a lease, including a new lease or a lease amendment, executed by the owner and the family must be for at least one year, or the remaining term of the HAP contract if the remaining term of the HAP contract is less than one year.

(c) *Move from unit.* The family must notify the HA and the owner before the family moves out of the unit.

(d) *Termination of tenancy.* (1) Subpart A of part 247 of this title, *Eviction from Certain Subsidized and HUD-Owned Projects,* applies, except § 247.4(d) of this title.

(2) The lease may contain a provision permitting the family to terminate the lease on not more than 60 days advance written notice to the owner. In the case of a lease term for more than one year, the lease must contain a provision permitting the family to terminate the lease on such notice after the first year of the term.

(3) The owner may offer the family a new lease for execution by the family for a term beginning at any time after the first year of the term of the lease. The owner must give the family written notice of the offer at least 60 days before the proposed commencement date of the new lease term. The offer may specify a reasonable time for acceptance by the family. Failure by the family to accept the offer of a new lease in accordance with this paragraph shall be ''other good cause'' for termination of tenancy (under § 247.3(a)(3) of this title).

§ 983.208 Informal review.

Section 982.554, *Informal review for applicant,* applies, except § 982.554(c)(3) of this chapter.

Dated: June 8, 1995.

Joseph Shuldiner,

Assistant Secretary.

[FR Doc. 95–15906 Filed 6–30–95; 8:45 am]

BILLING CODE 4210–33–P

DEPARTMENT OF HOUSING AND URBAN DEVELOPMENT

Office of Administration

[Docket No. N–95–1628; FR–2294–N–03]

Submission of Proposed Information Collection to OMB

AGENCY: Office of Administration, HUD.

ACTION: Notice.

SUMMARY: The proposed information collection requirement described below has been submitted to the Office of Management and Budget (OMB) for review, as required by the Paperwork Reduction Act. The Department is soliciting public comments on the subject proposal.

ADDRESSES: Interested persons are invited to submit comments regarding this proposal. Comments must be received within thirty (30) days from the date of this Notice. Comments should refer to the proposal by name and should be sent to:

Joseph F. Lackey, Jr., OMB Desk Officer, Office of Management and Budget, New Executive Office Building, Washington, DC 20503.

FOR FURTHER INFORMATION CONTACT: Kay F. Weaver, Reports Management Officer, Department of Housing and Urban Development, 451 7th Street, Southwest, Washington, DC 20410, telephone (202) 708–0050. This is not a toll-free number. Copies of the proposed forms and other available documents submitted to OMB may be obtained from Ms. Weaver.

SUPPLEMENTARY INFORMATION: The Department has submitted the proposal for the collection of information, as described below, to OMB for review, as required by the Paperwork Reduction Act (44 U.S.C. Chapter 35).

The Notice lists the following information: (1) The title of the information collection proposal; (2) the office of the agency to collect the information; (3) the description of the need for the information and its proposed use; (4) the agency form number, if applicable; (5) what members of the public will be affected by the proposal; (6) an estimate of the total number of hours needed to prepare the information submission including number of respondents, frequency of response, and hours of response; (7) whether the proposal is new or an extension, reinstatement, or revision of an information collection requirement; and (8) the names and telephone numbers of an agency official familiar with the proposal and of the OMB Desk Officer for the Department.

Authority: Section 3507 of the Paperwork Reduction Act, 44 U.S.C. 3507; sec. 7(d) of the Department of Housing and Urban Development Act, 42 U.S.C. 3535(d).

Dated: June 22, 1995.

David S. Cristy,

Director, Information Resources Management Policy and Management Division.

Notice of Submission of Proposed Information Collection to OMB

PROPOSAL: Section 8 Certificate and Housing Voucher Program (FR–2294).

OFFICE: Public and Indian Housing.

DESCRIPTION OF THE NEED FOR THE INFORMATION AND ITS PROPOSED USE: Under the Section 8 Rental Certificate Program and Rental Voucher Program, the Department of Housing and Urban Development (HUD) enters into an Annual Contributions Contract (ACC) with Public Housing Agencies to assist very low-income families who enter into leases directly with private owners of existing rental housing.

FORM NUMBER: HUD–52515, 52517A, 52578, 52578B, 52580, 52580A, 52595, 52646, 52663, 52665, 52667, 52672, 52673, 52681, 52683.

RESPONDENTS: Individuals or Households and State, Local, or Tribal Government.

REPORTING BURDEN:

	Number of respondents	×	Frequency of response	×	Hours per response	=	Burden hours
Information collection	252,600		9.30		.40		947,493

TOTAL ESTIMATED BURDEN HOURS: 947,493.

STATUS: Revision.

CONTACT: Cecelia Livingston, HUD, (202) 708–3887; Joseph F. Lackey, Jr., OMB, (202) 395–7316.

Dated: June 22, 1995.

[FR Doc. 95–15907 Filed 6–30–95; 8:45 am]

BILLING CODE 4210–01–M

federal register

Monday
July 3, 1995

Part IV

Department of Defense

General Services Administration

National Aeronautics and Space Administration

48 CFR Part 1, et al.

Federal Acquisition Regulations; Final Rules

DEPARTMENT OF DEFENSE

GENERAL SERVICES ADMINISTRATION

NATIONAL AERONAUTICS AND SPACE ADMINISTRATION

48 CFR Parts 1, 2, 3, 4, 5, 6, 7, 8, 9, 12, 13, 14, 15, 16, 19, 20, 22, 23, 25, 27, 28, 32, 33, 36, 41, 42, 43, 44, 45, 46, 47, 49, 52, and 53

[Federal Acquisition Circular 90–29]

Federal Acquisition Regulation; Introduction of Miscellaneous Amendments

AGENCIES: Department of Defense (DOD), General Services Administration (GSA), and National Aeronautics and Space Administration (NASA).

ACTION: Summary presentation of interim rules.

SUMMARY: This document serves to introduce the documents which follow and which comprise Federal Acquisition Circular (FAC) 90–29. The Federal Acquisition Regulatory Council is issuing FAC 90–29 to amend the Federal Acquisition Regulation (FAR) to implement changes in the following subject areas:

Item	Subject	FAR case	Rule type	Team leader
I	FAR guiding principles	95–010	Final	O'Neill
II	Electronic contracting	91–104	Interim	Loeb
III	Simplified acquisition procedures/FACNET	94–770	Interim	Maykowskyj

DATES: Effective Date: July 3, 1995.

Comment Closing Date: September 1, 1995.

FOR FURTHER INFORMATION CONTACT: The team leader whose name appears in relation to each FAR case. For general information, contact the FAR Secretariat, Room 4037, GS Building, Washington, DC, 20405 (202) 501–4755. Please cite FAC 90–29 and FAR case numbers(s).

SUPPLEMENTARY INFORMATION: Federal Acquisition Circular 90–29 amends the Federal Acquisition Regulation (FAR) as specified below:

For the actual revisions and/or amendments to these FAR cases, refer to the specific item number and subject set forth in the documents following these item summaries.

Item I—FAR Guiding Principles (FAR Case 95–010)

This final rule amends the FAR at 1.102 to incorporate the Statement of Guiding Principles for the FAR as agreed to by the FAR Council.

Item II—Electronic Contracting (FAR Case 91–104)

This interim rule amends the FAR to address the use of electronic commerce/electronic data interchange in Government contracting. This rule is intended to remove any barriers that existed in the FAR to use of electronic contracting/electronic data interchange.

Item III—Simplified Acquisition Procedures/FACNET (FAR Case 94–770)

This interim rule implements the simplified acquisition and Federal Acquisition Computer Network (FACNET) requirements of the Federal Acquisition Streamlining Act (the Act). The Act defines the simplified acquisition threshold as $100,000. However, the FAR and the Act limit the use of simplified acquisition procedures by procurement activities not having certified interim FACNET to procurements not exceeding $50,000.

FACNET is a universal electronic capability that will permit potential contractors to, as a minimum, obtain information on proposed procurements, submit responses, query the system, and receive awards on a Governmentwide basis.

The reader should note the key features represented in FAR case 94–770 which will change the acquisition process significantly upon implementation and continue to do so as contracting offices/activities and agencies begin to certify and implement the use of FACNET. These key features are: the small purchase limitation of $25,000 becomes the simplified acquisition threshold of $100,000 (see 13.101); use of the simplified acquisition procedures is tied to FACNET—simplified acquisition procedures may be used up to $50,000 upon FAR implementation without FACNET and up to $100,000 upon interim FACNET certification (see 13.103(b)); for non-FACNET acquisitions over $25,000, a synopsis for 15 days is still required; solicitation response time must provide a reasonable amount of time to afford potential offerors a reasonable opportunity to respond; the regulation exempts simplified acquisition procedures from 15 statutes and from certain provisions and clauses; contracting officers need to add any necessary clauses to the back of the purchase order form; and all purchases between $2,500 and $100,000 are reserved for small business (see 19.502–2).

In addition to what the Act provided, the SAT/FACNET Team has incorporated coverage that provides flexibility and latitude that encourages the contracting officer to use innovative approaches in awarding contracts, seek the ''best value'' for the Government which includes past performance and quality; permits use of other than fixed price orders/contracts, when authorized by the agency; encourages the use of options; and increases the property clause threshold to be commensurate with the implementation and certification of FACNET.

The most significant change in this rule is the implementation of FACNET which is addressed primarily in Subpart 4.5. FACNET will provide the capability of existing computer hardware and software to perform certain functions in a standard manner in order to provide one face to industry for the entire Government. FACNET is the preferred means for conducting all purchases under the simplified acquisition threshold ($100,000) and above the micro-purchase threshold ($2,500). Contracting offices/activities may not conduct acquisitions using simplified acquisition procedures between $50,000 and $100,000, until they have certified and implemented interim FACNET.

However, it is also significant to highlight what requirements did not change with FASA, such as the compliance with Part 8, required sources of supply; the policy on not splitting orders; requirement for posting $10,000 ($5,000 DOD); the need to synopsize over $25,000; the requirement for small business set-asides; and contracting reporting.

Dated: June 26, 1995.

C. Allen Olson,

Director, Office of Federal Acquisition Policy.

Federal Acquisition Circular

Number 90–29

Federal Acquisition Circular (FAC) 90–29 is issued under the authority of the Secretary of Defense, the Administrator of General Services, and the Administrator for the National Aeronautics and Space Administration.

Unless otherwise specified, all Federal Acquisition Regulation (FAR) and other directive material contained in FAC 90–29 is effective July 3, 1995.

Dated: June 23, 1995.

Roland A. Hassebrock,

Col., USAF Director, Defense Procurement (Acting).

Dated: June 16, 1995.

Ida M. Ustad,

Associate Administrator for Acquisition Policy General Services Administration.

Dated: June 9, 1995.

Thomas S. Luedtke,

Deputy Associate Administrator for Procurement NASA.

[FR Doc. 95–16079 Filed 6–30–95; 8:45 am]

BILLING CODE 6820–EP–M

DEPARTMENT OF DEFENSE

GENERAL SERVICES ADMINISTRATION

NATIONAL AERONAUTICS AND SPACE ADMINISTRATION

48 CFR Part 1

[FAC 90–29; FAR Case 95–10, Item I]

RIN 9000-AG55

Federal Acquisition Regulation; FAR Guiding Principles

AGENCY: Department of Defense (DOD), General Services Administration (GSA), and National Aeronautics and Space Administration (NASA).

ACTION: Final rule.

SUMMARY: The Federal Acquisition Regulatory Council agreed on a final rule to amend the Federal Acquisition Regulation (FAR) to incorporate the Statement of Guiding Principles. This regulatory action was not subject to Office of Management and Budget review under Executive Order 12866, dated September 30, 1993.

EFFECTIVE DATE: July 3, 1995.

FOR FURTHER INFORMATION CONTACT: Mr. Jack O'Neill at 202–501–3856 in reference to this FAR case. For general information, contact the FAR Secretariat, Room 4037, GS Building, Washington, DC 20405 (202) 501–4755. Please cite FAC 90–29, FAR case 95–10.

SUPPLEMENTARY INFORMATION:

A. Background

On Friday, January 20, 1995, the Office of Federal Procurement Policy (OFPP), Office of Management and Budget, published in the **Federal Register** at 60 FR 4205, a Notice of Core Guiding Principles for the Federal Acquisition System. The OFPP, in accordance with a decision of the FAR Rewrite Board of Directors, then requested that the Core Guiding Principles be incorporated into the regulation. This final rule completes the action requested by the Board of Directors.

B. Regulatory Flexibility Act

The final rule does not constitute a significant FAR revision within the meaning of FAR 1.501 and Public Law 98–577, and publication for public comments is not required. Therefore, the Regulatory Flexibility Act does not apply. However, comments from small entities concerning the affected subpart will be considered in accordance with 5 U.S.C. 610. Such comments must be submitted separately and cite 5 U.S.C. 601, *et seq.* (FAC 90–29, FAR case 95–10), in correspondence.

C. Paperwork Reduction Act

The Paperwork Reduction Act does not apply because the changes to the FAR do not impose recordkeeping or information collection requirements, or collections of information from offerors, contractors, or members of the public which require the approval of the Office of Management and Budget under 44 U.S.C. 3501, *et seq.*

List of Subjects in 48 CFR Part 1

Government procurement.

Dated: June 26, 1995.

C. Allen Olson,

Director, Office of Federal Acquisition Policy.

Therefore, 48 CFR Part 1 is amended as set forth below:

1. The authority citation for 48 CFR Part 1 continues to read as follows:

Authority: 40 U.S.C. 486(c); 10 U.S.C. chapter 137; and 42 U.S.C. 2473(c).

PART 1—FEDERAL ACQUISITION REGULATIONS SYSTEM

1.102–1.105 [Redesignated as 1.103–1.106]

2. Subpart 1.1 is amended by redesignating sections 1.102 through 1.105 as 1.103 through 1.106 and adding new sections 1.102 through 1.02–4 to read as follows:

1.102 Statement of guiding principles for the federal acquisition system.

(a) The vision for the Federal Acquisition System is to deliver on a timely basis the best value product or service to the customer, while maintaining the public's trust and fulfilling public policy objectives. Participants in the acquisition process should work together as a team and should be empowered to make decisions within their area of responsibility.

(b) The Federal Acquisition System will—

(1) Satisfy the customer in terms of cost, quality, and timeliness of the delivered product or service by, for example—

(i) Maximizing the use of commercial products and services;

(ii) Using contractors who have a track record of successful past performance or who demonstrate a current superior ability to perform; and

(iii) Promoting competition;

(2) Minimize administrative operating costs;

(3) Conduct business with integrity, fairness, and openness; and

(4) Fulfill public policy objectives.

(c) The Acquisition Team consists of all participants in Government acquisition including not only representatives of the technical, supply, and procurement communities but also the customers they serve, and the contractors who provide the products and services.

(d) The role of each member of the Acquisition Team is to exercise personal initiative and sound business judgment in providing the best value product or service to meet the customer's needs. In exercising initiative, Government members of the Acquisition Team may assume if a specific strategy, practice, policy or procedure is in the best interests of the Government and is not addressed in the FAR nor prohibited by law (statute or case law), Executive order or other regulation, that the strategy, practice, policy or procedure is a permissible exercise of authority.

1.102–1 Discussion

(a) *Introduction.* The statement of Guiding Principles for the Federal Acquisition System (System) represents a concise statement designed to be user-friendly for all participants in Government acquisition. The following discussion of the principles is provided in order to illuminate the meaning of the terms and phrases used. The framework for the System includes the Guiding Principles for the System and

the supporting policies and procedures in the FAR.

(b) *Vision.* All participants in the System are responsible for making acquisition decisions that deliver the best value product or service to the customer. Best value must be viewed from a broad perspective and is achieved by balancing the many competing interests in the System. The result is a system which works better and costs less.

1.102–2 Performance standards.

(a) *Satisfy the customer in terms of cost, quality, and timeliness of the delivered product or service.* (1) The principal customers for the product or service provided by the System are the users and line managers, acting on behalf of the American taxpayer.

(2) The System must be responsive and adaptive to customer needs, concerns, and feedback. Implementation of acquisition policies and procedures, as well as consideration of timeliness, quality and cost throughout the process, must take into account the perspective of the user of the product or service.

(3) When selecting contractors to provide products or perform services the Government will use contractors who have a track record of successful past performance or who demonstrate a current superior ability to perform.

(4) The Government must not hesitate to communicate with the commercial sector as early as possible in the acquisition cycle to help the Government determine the capabilities available in the commercial marketplace. The Government will maximize its use of commercial products and services in meeting Government requirements.

(5) It is the policy of the System to promote competition in the acquisition process.

(6) The System must perform in a timely, high quality, and cost-effective manner.

(7) All members of the Team are required to employ planning as an integral part of the overall process of acquiring products or services. Although advance planning is required, each member of the Team must be flexible in order to accommodate changing or unforeseen mission needs. Planning is a tool for the accomplishment of tasks, and application of its discipline should be commensurate with the size and nature of a given task.

(b) *Minimize administrative operating costs.* (1) In order to ensure that maximum efficiency is obtained, rules, regulations, and policies should be promulgated only when their benefits clearly exceed the costs of their development, implementation, administration, and enforcement. This applies to internal administrative processes, including reviews, and to rules and procedures applied to the contractor community.

(2) The System must provide uniformity where it contributes to efficiency or where fairness or predictability is essential. The System should also, however, encourage innovation, and local adaptation where uniformity is not essential.

(c) *Conduct business with integrity, fairness, and openness.* (1) An essential consideration in every aspect of the System is maintaining the public's trust. Not only must the System have integrity, but the actions of each member of the Team must reflect integrity, fairness, and openness. The foundation of integrity within the System is a competent, experienced, and well-trained, professional workforce. Accordingly each member of the Team is responsible and accountable for the wise use of public resources as well as acting in a manner which maintains the public's trust. Fairness and openness require open communication among team members, internal and external customers, and the public.

(2) To achieve efficient operations, the System must shift its focus from ''risk avoidance'' to one of ''risk management.'' The cost to the taxpayer of attempting to eliminate all risk is prohibitive. The Executive Branch will accept and manage the risk associated with empowering local procurement officials to take independent action based on their professional judgment.

(d) *Fulfill public policy objectives.* The System must support the attainment of public policy goals adopted by the Congress and the President. In attaining these goals, and in its overalll operations, the process shall ensure the efficient use of public resources.

§ 1.102–3 Acquisition team.

The purpose of defining the Federal Acquisition Team (Team) in the Guiding Principles is to ensure that participants in the System are identified—beginning with the customer and ending with the contractor of the product or service. By identifying the team members in this manner, teamwork, unity of purpose, and open communication among the members of the Team in sharing the vision and achieving the goal of the System are encouraged. Individual team members will participate in the acquisition process at the appropriate time.

§ 1.102–4 Role of the acquisition team.

(a) Government members of the Team must be empowered to make acquisition decisions within their areas of responsibility, including selection, negotiation, and administration of contracts consistent with the Guiding Principles. In particular, the contracting officer must have the authority to the maximum extent practicable and consistent with law, to determine the application of rules, regulations, and policies, on a specific contract.

(b) The authority to make decisions and the accountability for the decision made will be delegated to the lowest level within the System, consistent with law.

(c) The Team must be prepared to perform the functions and duties assigned. The Government is committed to provide training, professional development, and other resources necessary for maintaining and improving the knowledge, skills, and abilities for all Government participants on the Team, both with regard to their particular area of responsibility within the System, and their respective role as a team member. The contractor community is encouraged to do likewise.

(d) The System will foster cooperative relationships between the Government and its contractors consistent with its overriding responsibility to the taxpayers.

(e) The FAR outlines procurement policies and procedures that are used by members of the Acquisition Team. If a policy or procedure, or a particular strategy or practice, is in the best interest of the Government and is not specifically addressed in the FAR, nor prohibited by law (statute or case law), Executive order or other regulation, Government members of the Team should not assume it is prohibited. Rather, absence of direction should be interpreted as permitting the Team to innovative and use sound business judgment that is otherwise consistent with law and within the limits of their authority.

[FR Doc. 95–16080 Filed 6–30–95; 8:45 am]

BILLING CODE 6820–EP–M

DEPARTMENT OF DEFENSE

GENERAL SERVICES ADMINISTRATION

NATIONAL AERONAUTICS AND SPACE ADMINISTRATION

48 CFR Parts 1, 2, 4, 5, 7, 8, 9, 12, 14, 15, 16, 19, 20, 25, 28, 32, 36, 45, 52, and 53

[FAC 90–29; FAR Case 91–104; Item II]

RIN 9000–AE46

Federal Acquisition Regulation; Electronic Contracting

AGENCY: Department of Defense (DOD), General Services Administration (GSA), and National Aeronautics and Space Administration (NASA).

ACTION: Interim rule with request for comment.

SUMMARY: The Federal Acquisition Regulatory Council (FARC) is issuing an interim rule to amend the Federal Acquisition Regulation (FAR) to address the use of electronic commerce/electronic data interchange in Government contracting. This regulatory action was subject to Office of Management and Budget review under Executive Order 12866, dated September 30, 1993.

DATES: *Effective Date:* July 3, 1995.

Comment Date: Comments should be submitted to the FAR Secretariat at the address shown below on or before September 1, 1995 to be considered in the formulation of a final rule.

ADDRESSES: Interested parties should submit written comments to: General Services Administration, FAR Secretariat (VRS), 18th & F Streets, NW, Room 4037, Attn: Ms. Beverly Fayson, Washington, DC 20405. Please cite FAC 90–29, FAR case 91–104 in all correspondence related to this case.

FOR FURTHER INFORMATION CONTACT: Mr. Edward Loeb at (202) 501–4547 in reference to this FAR case. For general information, contact the FAR Secretariat, Room 4037, GS Building, Washington, DC 20405 (202) 501–4755. Please cite FAC 90–29 (FAR Case 91–104).

SUPPLEMENTARY INFORMATION:

A. BACKGROUND

A proposed rule was published in the **Federal Register** at 58 FR 69588, December 30, 1993. The rule proposed amendments to the FAR to remove any barriers to the use of electronic data interchange in Government contracting. Thirty-six comments from ten respondents were received during the public comment period. After evaluating the public comments, another proposed rule was published because significant changes to the rule published on December 30, 1993, were deemed to be necessary.

A revised proposed rule was published in the **Federal Register** at 60 FR 12384, March 6, 1995. Eighteen comments were received in response to the proposed rule.

This interim rule and the interim rule published elsewhere in this issue under FAR case 94–770, Simplified Acquisition Procedures/FACENET, are interdependent and are meant to be considered jointly.

B. Regulatory Flexibility Act

This interim rule is expected to have a significant economic impact on a substantial number of small entities within the meaning of the Regulatory Flexibility Act, 5 U.S.C. 601, *et seq.*, because it encourages broader use of electronic contracting, thereby improving industry access to Federal contracting opportunities. The implementation of Electronic Contracting and use of the Federal Acquisition Computer Network (FACENET) will provide for electronic exchange of acquisition information between the private sector and the Federal Government that will increase the opportunities for vendors currently doing business with the Government, particularly small businesses. It is recognized that an initial start-up cost will be incurred for the purchase of a personal computer, modem, software, and telephone lines, estimated to be $1,500. Additionally, it is anticipated that most small businesses will subscribe to third party value added network (VAN) services to facilitate their communications with the Government's computers. The cost of an advance subscription ranges from approximately $30 to $100 per month, depending on the type of services obtained. The interim rule does not duplicate, overlap, or conflict with any other Federal rules. An Initial Regulatory Flexibility Analysis (IRFA) has been prepared and may be obtained from the FAR Secretariat. A copy of the IRFA will be submitted to the Chief Counsel for Advocacy of the Small Business Administration. Comments are invited from small businesses and other interested parties. Comments from small entities concerning the affected FAR parts will also be considered in accordance with 5 U.S.C. 610. Such comments must be submitted separately and should cite 5 U.S.C. 601, *et seq.* (FAR case 91–104) in correspondence.

C. Paperwork Reduction Act

The Paperwork Reduction Act does not apply because the interim rule does not impose any information collection requirements which require the approval of the Office of Management and Budget under 44 U.S.C. 3501, *et seq.*

D. Determination to Issue an Interim Rule

A determination has been made by the Secretary of Defense (DOD), the Administrator of General Services (GSA), and the Administrator of the National Aeronautics and Space Administration (NASA) under the authority provided by section 22 of the Office of Federal Procurement Policy Act (41 U.S.C. 418b) to issue this regulation as an interim rule.

The Simplified Acquisition Threshold Procedures/Federal Acquisition Computer Network (SAT/FACNET) rule (FAR Case 94–770) and the Electronic Contracting (EC) rule (FAR Case 91–104) benefit industry and Government by enhancing efficiency of contracting in an environment of declining personnel staffing and resulting increase in workload for contracting personnel. The rules are linked and require simultaneous promulgation. The proposed rules were published simultaneously in the **Federal Register** on March 6, 1995, with the public comment period closing on May 5, 1995. A public meeting was held on these rules on April 3, 1995, and no substantive comments were presented at the meeting.

Section 22 of the Office of Federal Procurement Policy Act permits issuance of procurement policies, regulations, procedures, or forms as interim rules prior to consideration of public comments when urgent and compelling circumstances make it impracticable to do otherwise. Urgent and compelling reasons exist to make these rules effective prior to full consideration of public comment. Proceeding with these interim rules is required to permit the Federal Government to cope with the fundamental downsizing of its acquisition workforce and the large end-of-fiscal-year workload, with diminished resources. The Federal Acquisition Streamlining Act of 1994 (FASA) and its provisions on SAT/FACNET, provide relief from various burdens that affect the Government acquisition process. For example, purchases under the new simplified acquisition approach will become far less complex than today. Using figures from the Department of Defense for

illustrative purposes, large purchase solicitations run 29 pages on the average whereas non-automated small purchases are about 12 pages in length, and automated small purchase solicitations, used by some DoD purchasing activities, are even less, 1 to 2 pages. The beneficial results of implementing these FASA provisions are evidenced further by the time saved in awarding orders under the existing small purchase procedures as opposed to contracts above the small purchase threshold of $25,000. The current average lead-time for awards below $25,000 is 26 days, while above $25,000 the average lead-time is 90 days for sealed bids and 210 days for competitive negotiations. These timeframes will be reduced further by implementation of the simplified acquisition authority in this rule by establishing reasonable timeframes for submission of offers for simplified acquisitions in lieu of a rigid 30 days period. Through use of the simplified acquisition procedures for actions not exceeding $50,000, the lead-time for approximately 30,000 contracts per year will be reduced to a fraction of the current lead-time. Use of electronic commerce/electronic data interchange capabilities at procurement activities certified to use FACNET will reduce lead-times even further and will increase the number of contracts affected to approximately 45,000, since FACNET users will be able to use the newly authorized simplified acquisition threshold of $100,000 rather than only $50,000 where FACNET has not been certified. Use of electronic commerce/electronic data interchange at a DoD test site reduced lead-time to 11 days. Reducing the lead-time will allow the contracting community to be more responsive in spite of the already reduced personnel resources, focus its efforts on more complex procurements, reduce the cost of the procurement process for both Government and industry, and provide better service to the direct users of the acquisition system, and ultimately to the public.

FASA called for its implementation in the FAR by October 1, 1995, or earlier. Due to the time required to fully consider, analyze, and document the analysis of public comments received in response to these proposed rules, it is unlikely that the rules could be published in the FAR, promulgated to procurement personnel and contractors, have procurement personnel and contractors trained, and have the new rules in use by the beginning of the last quarter of the fiscal year. It is essential that these rules be made effective by the beginning of the last quarter of the fiscal year because of personnel downsizing that has already occurred and that is expected before the end of the fiscal year. Additionally, the workload in the last quarter of the fiscal year is the most demanding of the fiscal year. Introduction of new procedures and processes in the middle of that quarter would be counterproductive to efficiency and would require operations to be suspended while retraining of the workforce is accomplished. Therefore, the regulations in FAC 90–29 must be effective no later than July 3, 1995, to provide the Federal acquisition workforce the labor and cost saving benefits provided by the statute, or they must be delayed until the end of the fiscal year so as not to interfere with acquisition operations. Immediate implementation as an interim rule will permit time for training of the acquisition workforce and FAR acquisition procedures to be fully operational before the final quarter of FY 1995.

Pursuant to Public Law 98–577 and FAR 1.501, public comments received in response to these interim rules and the prior proposed rules will be considered in formulating the final rules.

List of Subjects in 48 CFR Parts 1, 2, 4, 5, 7, 8, 9, 12, 14, 15, 16, 19, 20, 25, 28, 32, 36, 45, 52, and 53

Government procurement.

Dated: June 26, 1995.

C. Allen Olson,

Director, Office of Federal Acquisition Policy.

Therefore, 48 CFR Parts 1, 2, 4, 5, 7, 8, 9, 12, 14, 15, 16, 19, 20, 25, 28, 32, 36, 45, 52, and 53 are amended as set forth below:

1. The authority citation for 48 CFR Parts 1, 2, 4, 5, 7, 8, 9, 12, 14, 15, 16, 19, 20, 25, 28, 32, 45, 52, and 53 continues to read as follows:

Authority: 40 USC 486(c); 10 U.S.C. chapter 137; and 42 U.S.C. 2473(c).

PART 1—FEDERAL ACQUISITION REGULATIONS SYSTEM

1.105 [Amended]

2. Section 1.105 is amended in the FAR segment column by removing entry ''14.406'' and inserting ''14.407'' in its place.

PART 2—DEFINITIONS OF WORDS AND TERMS

3. Section 2.101 is amended by adding, in alphabetical order, the definitions ''In writing'' or written'' and signature'' or ''Signature'' or ''signed'' to read as follows:

2.101 Definitions.

* * * * *

In writing or *written* means any worded or numbered expression which can be read, reproduced, and later communicated, and includes electronically transmitted and stored information.

* * * * *

Signature or *signed* means the discrete, verifiable symbol of an individual which, when affixed to a writing with the knowledge and consent of the individual, indicates a present intention to authenticate the writing. This includes electronic systems.

* * * * *

PART 4—ADMINISTRATIVE MATTERS

4. Section 4.101 is revised to read as follows:

4.101 Contracting officer's signature.

Only contracting officers shall sign contracts on behalf of the United States. The contracting officer's name and official title shall be typed, stamped, or printed on the contract. The contracting officer normally signs the contract after it has been signed by the contractor. The contracting officer shall ensure that the signer(s) have authority to bind the contractor (see specific requirements in 4.102 of this subpart).

4.201 [Amended]

5 & 6. Section 4.201 is amended in paragraph (a) by removing the parenthetical ''(see 4.101(b)),''; in paragraph (b)(1) by removing the parenthetical ''(stamped ''DUPLICATE ORIGINAL,'' see 4.101(b))''; and in paragraph (d) by revising the parenthetical ''(see 30.401(b)) to read ''(see 30.601(b))''.

PART 5—PUBLICIZING CONTRACT ACTIONS

7. Section 5.101 is amended by adding paragraph (a)(2)(iv) to read as follows:

5.101 Methods of disseminating information.

* * * * *

(a) * * *

(2) * * *

(iv) Electronic dissemination available to the public at the contracting office may be used to satisfy the public display requirement. Contracting offices utilizing electronic systems for public posting shall periodically publicize the methods for accessing such information.

* * * * *

8. Section 5.102(a)(4)(i) is revised to read as follows:

5.102 availability of solicitations.

(a) * * *

(4) * * *

(i) A copy of the solicitation specifications. In the case of solicitations disseminated by electronic data interchange, solicitations may be furnished directly to the electronic address of the small business concern;

* * * * *

(9) Section 5.207 is amended by adding a new paragraph (c)(2)(xvii) to read as follows:

5.207 Preparation and transmittal of synopses.

* * * * *

(c) * * *

(2) * * *

(xvii) If the solicitation will be made available to interested parties through electronic data interchange, provide any information necessary to obtain and respond to the solicitation electronically.

* * * * *

PART 7—ACQUISITION PLANNING

7.30 [Amended]

10. Section 7.304(b)(3) is amended in the first sentence by adding'', or electronic equivalent,'' after the word ''envelope''.

11. Section 7.306(a)(1)(i) is revised to read as follows:

7.306 Evaluation.

* * * * *

(a)(1) * * *

(i) Open the sealed cost comparison on which the cost estimate for Government performance has been entered;

* * * * *

7.307 [Amended]

12. Section 7.307 is amended in the first sentence of paragraph (b) by removing ''14.407–8'' and inserting ''14.408–8'' in its place.

PART 8—REQUIRED SOURCES OF SUPPLIES AND SERVICES

13. Section 8.405–2 is amended by revising the first sentence of the introductory text to read as follows:

8.405–2 Order placement.

Ordering offices may use Optional Form 347, an agency-prescribed form, or an established electronic communications format to order items from schedules and shall place orders directly with the contractor within the limitations specified in each schedule.

* * *

* * * * *

8.705–3 [Amended]

14. Section 8.705–3(a) is amended in the first sentence by removing the word ''letter'' and inserting ''written'' in its place.

PART 9—CONTRACTOR QUALIFICATIONS

9.206–3 [Amended]

15. Section 9.206–3(b) is amended in the first sentence by removing ''requested copies of the solicitation'' and inserting ''expressed interest in the acquisition'' in its place.

PART 12—CONTRACT DELIVERY OR PERFORMANCE

16. Section 12.103(e) is revised to read as follows:

12.103 Supplies or services.

* * * * *

(e) In invitations for bids, if the delivery schedule is based on the date of the contract, and a bid offers delivery based on the date the contractor receives the contract or notice of award, the contracting officer shall evaluate the bid by adding 5 calendar days (as representing the normal time for arrival through ordinary mail). If the contract or notice of award will be transmitted electronically, (1) the solicitation shall so state; and (2) the contracting officer shall evaluate delivery schedule based on the date of contract receipt or notice of award, by adding one working day. (The term ''working day'' excludes weekends and U.S. Federal holidays.) If the offered delivery date computed with mailing or transmittal time is later than the delivery date required by the invitation for bids, the bid shall be considered nonresponsive and rejected. If award is made, the delivery date will be the number of days offered in the bid after the contractor actually receives the notice of award.

PART 14—SEALED BIDDING

17. Section 14.201–6(e)(1) is revised to read as follows:

14.201–6 Solicitation provisions.

* * * * *

(e) * * *

(1) 52.214–9, Failure to Submit Bid, except when using electronic data interchange methods not requiring solicitation mailing lists; and

* * * * *

14.202–1 Bidding time.

18. Section 14.202–1(b)(6) is amended by removing the word ''mailing'' and inserting ''transmittal'' in its place.

19. Section 14.202–2(a)(1) is revised to read as follows:

14.202–2 Telegraphic bids.

(a) * * *

(1) The date for the opening of bids will not allow bidders sufficient time to submit bids in the prescribed format; or

* * * * *

20. Section 14.202–8 is added to read as follows:

14.202–8 Electronic bids.

In accordance with subpart 4.5, contracting officers may authorize use of electronic commerce for submission of bids. If electronic bids are authorized, the solicitation shall specify the electronic commerce method(s) that bidders may use.

21. Section 14.203–1 is revised to read as follows:

14.203–1 Transmittal to prospective bidders.

Invitations for bids or presolicitation notices shall be transmitted as specified in 14.205, and shall be provided to others in accordance with 5.102. When a contracting office is located in the United States, any solicitation sent to a prospective bidder located at a foreign address shall be sent by electronic data interchange or international air mail if security classification permits.

22. Section 14.205–1(a) is revised to read as follows:

14.205–1 Establishment of lists.

(a) Solicitation mailing lists shall be established by contracting activities to assure access to adequate sources of supplies and services. This rule need not be followed, however, when (1) the requirements of the contracting office can be obtained through use of simplified acquisition procedures (see part 13), (2) the requirements are nonrecurring, or (3) electronic commerce methods are used which transmit solicitations or presolicitation notices automatically to all interested sources participating in electronic contracting with the purchasing activity. Lists may be established as a central list for use by all contracting offices within the contracting activity, or as local lists maintained by each contracting office.

* * * * *

23. Section 14.209(b) is amended by adding a second sentence to read as follows:

14.209 Cancellation of invitations before opening.

* * * * *

(b) * * * For bids received electronically, the data received shall not be viewed and shall be purged from primary and backup data storage systems.

* * * * *

24. Section 14.301 is amended by adding paragraph (e) to read as follows:

14.301 Responsiveness of bids.

* * * * *

(e) Bids submitted by electronic commerce shall be considered only if the electronic commerce method was specifically stipulated or permitted by the solicitation.

25. Section 14.303 is amended by revising the first sentence of paragraph (a) and adding (c) to read as follows:

14.303 Mofification or withdrawal of bids.

(a) Bids may be modified or withdrawn by any method authorized by the solicitation, if notice is received in the office designated in the solicitation not later than the exact time set for opening of bids. * * *

* * * * *

(c) Upon withdrawal of an electronically transmitted bid, the data received shall not be viewed and shall be purged from primary and backup data storage systems.

26. Section 14.304–1 is amended by removing the word ''either'' at the end of paragraph (a) introductory text, by removing the word ''or'' at the end of paragraph (a)(2), by removing the period at the end of paragraph (a)(3) and inserting ''; or'' in its place, and adding paragraph (a)(4) to read as follows:

14.304–1 General.

* * * * *

(a) * * *

(4) It was transmitted through an electronic commerce method authorized by the solicitation and was received by the Government not later than 5:00 p.m. one working day prior to the date specified for receipt of bids.

* * * * *

27. Section 14.401(a) is amended by revising the second sentence to read as follows:

14.401 Receipt and safeguarding of bids.

(a) * * * Except as provided in paragraph (b) of this section, the bids shall not be opened or viewed, and shall remain in a locked bid box, a safe, or in a secured, restricted-access electronic bid box. * * *

* * * * *

28. Section 14.402–3(a)(1) is revised to read as follows:

14.402–3 Postponement of openings.

(a) * * *

(1) The contracting officer has reason to believe that the bids of an important segment of bidders have been delayed in the mails, or in the communications system specified for transmission of bids, for causes beyond their control and without their fault or negligence (e.g., flood, fire, accident, weather conditions, strikes, or Government equipment blackout or malfunction when bids are due); or

* * * * *

14.406 through 14.408–2 [Redesignated as 14.407 through 14.409–2; new 14.406 added]

29. Sections 14.406 through 14.406–4; 14.407 through 14.407–8; and 14.408, 14.408–1, and 14.408–2 are redesignated as 14.407 through 14.407–4; 14.408 through 14.408–8; and 14.409, 14.409–1, and 14.409–2, respectively, and a new section 14.406 is added to read as follows:

14.406 Receipt of an unreadable electronic bid.

If a bid received at the Government facility by electronic data interchange is unreadable to the degree that conformance to the essential requirements of the invitation for bids cannot be ascertained, the contracting officer immediately shall notify the bidder that the bid will be rejected unless the bidder provides clear and convincing evidence—

(a) Of the content of the bid as originally submitted; and

(b) That the unreadable condition of the bid was caused by Government software or hardware error, malfunction, or other Government mishandling.

30. Newly-redesignated section 14.407–2 is amended by adding paragraph (c) to read as follows:

14.407–2 Apparent clerical mistakes.

* * * * *

(c) Correction of bids submitted by electronic data interchange shall be effected by including in the electronic solicitation file the original bid, the verification request, and the bid verification.

14.407–1, 14.407–3, 14.407–4, 14.408–6, and 14.409–2 [Amended]

30a. In addition to the amendments set forth above, newly-redesignated sections 14.407–1 through 14.409–2 are amended by updating the internal references as follows:

Section	Remove	Insert
14.407–1	14.406	14.407
14.407–3 intro. text	14.406–3	14.407–3
	14.406–2	14.407–2
14.407–3(e), (h) & (i)	14.406–3	14.407–3
14.407–4(f)	14.406–4	14.407–4
14.408–6(c)	14.407–6	14.408–6
14.409–2	14.408–1	14.409–1

PART 15—CONTRACTING BY NEGOTIATION

31. Section 15.402 is amended by adding paragraph (k) to read as follows:

15.402 General.

* * * * *

(k) In accordance with subpart 4.5, contracting officers may authorize use of electronic commerce for submission of offers. If electronic offers are authorized, the solicitation shall specify the electronic commerce method(s) that offerors may use.

32. Section 15.407(d)(3) is revised to read as follows:

15.407 Solicitation provisions.

* * * * *

(d) * * *

(3) Insert in RFP's the provision at 52.215–15, Failure to Submit Offer, except when using electronic data interchange methods not requiring solicitation mailing lists; and

* * * * *

33. Section 15.410(b) is revised to read as follows:

15.410 Amendment of solicitations before closing date.

* * * * *

(b) The contracting officer shall determine if the closing date needs to be changed when amending a solicitation. If the time available before closing is insufficient, prospective offerors or quoters shall be notified by electronic data interchange, telegram, or telephone of an extension of the closing date. Telephonic and telegraphic notices shall be confirmed in the written amendment to the solicitation. The contracting officer shall not award a contract unless any amendments made to an RFP have been issued in sufficient time to be considered by prospective offerors.

* * * * *

34. Section 15.412 is amended by revising the heading and adding paragraph (h) to read as follows:

15.412 Late proposals, modifications, and withdrawals of proposals.

* * * * *

(h) Upon withdrawal of an electronically transmitted proposal, the data received shall not be viewed and shall be purged from primary and backup data storage systems.

35. Section 15.607 is amended by adding paragraph (d) to read as follows:

15.607 Disclosure of mistakes before award.

* * * * *

(d) If a proposal received at the Government facility in electronic format is unreadable to the degree that

conformance to the essential requirements of the solicitation cannot be ascertained from the document, the contracting officer immediately shall notify the offeror and provide the opportunity for the offeror to submit clear and convincing evidence—

(1) Of the content of the proposal as originally submitted; and

(2) That the unreadable condition of the proposal was caused by Government software or hardware error, malfunction, or other Government mishandling.

15.607, 15.608, and 15.1005 [Amended]

36. In addition to the amendments set forth above, sections 15.607, 15.608 and 15.1005 are amended by updating the internal references as follows:

Section	Remove	Insert
15.607(a)	14.406	14.407
15.608(c)	14.407–3	14.408–3
15.1005	14.406–4	14.407–4

PART 16—TYPES OF CONTRACTS

16.203–2 [Amended]

37. Section 16.203–2 is amended in the last sentence of the introductory text by removing ''14.407–4'' and inserting ''14.408–4'' in its place.

38. Section 16.506(c) is revised to read as follows:

16.506 Ordering.

* * * * *

(c) Orders may be placed by electronic commerce methods when permitted under the contract.

* * * * *

PART 19—SMALL BUSINESS AND SMALL DISADVANTAGED BUSINESS CONCERNS

19.811–2 [Amended]

39. Section 19.811–2 is amended in the introductory text of paragraph (a) by removing ''14.407–1(d)'' and inserting ''14.408–1(d)'' in its place.

PART 20—LABOR SURPLUS AREA CONCERNS

20.104 [Amended]

40. Section 20.104 is amended in paragraph (f) by removing ''14.407–6'' and inserting ''14.408–6'' in its place.

PART 25—FOREIGN ACQUISITION

25.405 [Amended]

41. Section 25.405 is amended in paragraph (e) by removing ''14.408–1(a)(2)'' and inserting ''14.409–1(a)(2)'' in its place.

PART 28—BONDS AND INSURANCE

28.101–4 [Amended]

42. Section 28.101–4 is amended in paragraph (c)(5) by removing ''14.406'' and inserting ''14.407'' in its place.

PART 32—CONTRACTING FINANCING

43. Section 32.503–1(b) is revised to read as follows:

32.503–1 Contractor requests.

* * * * *

(b) Comply with the instructions appropriate to the applicable form, and the contract terms; and

* * * * *

PART 36—CONSTRUCTION AND ARCHITECT-ENGINEER CONTRACTS

36.304 [Amended]

44. Section 36.304 is amended in the introductory text by removing ''14.407'' and inserting ''14.408'' in its place.

PART 45—GOVERNMENT PROPERTY

45. Section 45.606–5 is amended by revising paragraphs (b)(3) and (b)(4) to read as follows:

45.606–5 Instructions for preparing and submitting schedules of contractor inventory.

* * * * *

(b) * * *

(3) The standard inventory schedule forms may be electronically reproduced by contractors pursuant to 53.105, provided no change is made to the name, content or sequence of the data elements. All essential elements of data must be included and the form must be signed.

(4) The appropriate continuation sheet shall be used when more space is needed.

* * * * *

PART 52—SOLICITATION PROVISIONS AND CONTRACT CLAUSES

46. Section 52.212–1 is amended by revising the date in the heading of the clause and the fourth sentence in paragraph (b), and removing ''(R 7–104.92(b) 1974 APR)'', ''(R 1–1.316–5)'' and ''(R 1–1316–4(c))'' after ''(End of clause)'' to read as follows:

52.212–1 Time of Delivery.

* * * * *

Time of Delivery (Jul 1995)

* * * * *

(b) * * * However, the Government will evaluate an offer that proposes delivery based on the Contractor's date of receipt of the contract or notice of award by adding (i) five calendar days for delivery of the award through the ordinary mails, or (ii) one working day if the solicitation states that the contract or notice of award will be transmitted electronically. (The term ''working day'' excludes weekends and U.S. Federal holidays.) * * *

(End of clause)

* * * * *

47. Section 52.212–2 is amended by revising the date in the heading of the clause and the fourth sentence in paragraph (b), and removing ''(R 7–104.92(c) 1974 APR)'', ''(R 1–1.316–5(c))'' and ''(R 1–1.316–4(c))'' following ''(End of clause)'' to read as follows:

52.212–2 Desired and Required Time of Delivery.

* * * * *

Desired and Required Time of Delivery (Jul 1995)

* * * * *

(b) * * * However, the Government will evaluate an offer that proposes delivery based on the Contractor's date of receipt of the contract or notice of award by adding (i) five calendar days for delivery of the award through the ordinary mails, or (ii) one working day if the solicitation states that the contract or notice of award will be transmitted electronically. (The term ''working day'' excludes weekends and U.S. Federal holidays.) * * *

(End of clause)

* * * * *

48. Section 52.214–5 is amended by revising the date in the heading of the provision and adding paragraph (d) to read as follows:

52.214–5 Submission of Bids.

* * * * *

Submission of Bids (Jul 1995)

* * * * *

(d) Bids submitted by electronic commerce shall be considered only if the electronic commerce method was specifically stipulated or permitted by the solicitation.

49. Section 52.214–7 is amended by revising the date in the provision heading, at the end of paragraph (a)(2) by removing ''or'', at the end of paragraph (a)(3) by removing the period and inserting ''; or'' in its place, and adding paragraph (a)(4) to read as follows:

52.214–7 Late Submissions, Modifications, and Withdrawals of Bids.

* * * * *

Late Submissions, Modifications, and Withdrawals of Bids (Jul 1995)

(a) * * *

(4) Was transmitted through an electronic commerce method authorized by the solicitation and was received by the Government not later than 5:00 p.m., one

working day prior to the date specified for receipt of bids.

* * * * *

(End of provision)

50. Section 52.214–9 is amended by revising the introductory text, the date in the heading of the provision, and the second sentence of the provision, and by removing ''(R SF 33A, Para 6, 1978 JAN)'' after ''(End of provision)'' to read as follows:

52.214–9 Failure to Submit Bid.

As prescribed in 14.201–6(e)(1), insert the following provision in invitations for bids:

Failure to Submit Bid (Jul 1995)

* * * Instead, they should advise the issuing office by letter, postcard, or established electronic commerce methods, whether they want to receive future solicitations for similar requirements.* * *

(End of provision)

51. Section 52.214–23 is amended by revising the date in the heading of the provision, at the end of paragraph (a)(3) by removing ''or''; redesignating paragraph (a)(4) as (a)(5), and adding a new paragraph (a)(4) to read as follows:

52.214–23 Late Submissions, Modifications, and Withdrawals of Technical Proposals Under Two-Step Sealed Bidding.

* * * * *

Late Submissions, Modifications, and Withdrawals of Technical Proposals Under Two-Step Sealed Bidding (Jul 1995)

(a) * * *

(4) Was transmitted through an electronic commerce method authorized by the solicitation and was received by the Government not later than 5:00 p.m. one working day prior to the date specified for receipt of technical proposals; or

* * * * *

52. Section 52.214–32 is amended by revising the date in the heading of the provision and paragraph (a) to read as follows:

52.214–32 Late Submissions, Modifications, and Withdrawals of Bids (Overseas).

* * * * *

Late Submissions, Modifications, and Withdrawals of Bids (Overseas) (Jul 1995)

(a) Any bid received at the office designated in the solicitation after the exact time specified for receipt will not be considered unless it is received before award is made and it—

(1) Was sent by mail or, if authorized by the solicitation, was sent by telegram or via facsimile, and it is determined by the Government that the late receipt was due solely to mishandling by the Government after receipt at the Government installation; or

(2) Was transmitted through an electronic commerce method authorized by the solicitation and was received by the Government not later than 5:00 p.m. one working day prior to the date specified for receipt of bids. The term ''working day'' excludes weekends and U.S. Federal holidays.

* * * * *

53. Section 52.214–33 is amended by revising the date in the heading of the provision, at the end of paragraph (a)(1) by removing the word ''or'', redesignating paragraph (a)(2) as (a)(3), and adding a new paragraph (a)(2) to read as follows:

52.214–33 Late Submissions, Modifications, and Withdrawals of Technical Proposals Under Two-Step Sealed Bidding (Overseas).

* * * * *

Late Submissions, Modifications, and Withdrawals of Technical Proposals Under Two-Step Sealed Bidding (Overseas) (Jul 1995)

(a) * * *

(2) Was transmitted through an electronic commerce method authorized by the solicitation and was received by the Government not later than 5:00 p.m. one working day prior to the date specified for receipt of technical proposals. The term ''working day'' excludes weekends and U.S. Federal holidays; or

* * * * *

54. Section 52.215–9 is amended by revising the date in the provision heading, redesignating paragraph (d) as (e), and adding a new paragraph (d) to read as follows:

52.215–9 Submission of Offers.

* * * * *

Submission of Offers (Jul 1995)

(d) Offers submitted by electronic commerce shall be considered only if the electronic commerce method was specifically stipulated or permitted by the solicitation.

* * * * *

55. Section 52.215–10 is amended by revising the introductory text and the date in the provision heading, at the end of (a)(3) by removing the word ''or'', redesignating paragraph (a)(4) as (a)(5), and adding a new paragraph (a)(4) to read as follows:

52.215–10 Late Submissions, Modifications, and Withdrawals of Proposals.

As prescribed in 15.407(c)(6), insert the following provision:

Late Submissions, Modifications, and Withdrawals of Proposals (Jul 1995)

(a) * * *

(4) Was transmitted through an electronic commerce method authorized by the solicitation and was received by the Government not later than 5:00 p.m. one working day prior to the date specified for receipt of proposals; or

* * * * *

56. Section 52.215–15 is revised to read as follows:

52.215–15 Failure to Submit Offer.

As prescribed in 15.407(d)(3), insert the following provision:

Failure to Submit Offer (Jul 1995)

Recipients of this solicitation not responding with an offer should not return this solicitation, unless it specifies otherwise. Instead, they should advise the issuing office by letter, postcard, or established electronic commerce methods, whether they want to receive future solicitations for similar requirements. If a recipient does not submit an offer and does not notify the issuing office that future solicitations are desired, the recipient's name may be removed from the applicable mailing list.

(End of provision)

57. Section 52.215–36 is amended by revising the date in the provision heading, at the end of paragraph (a)(1) by removing the word ''or'', redesignating paragraph (a)(2) as (a)(3), and adding a new paragraph (a)(2) to read as follows:

52.215–36 Late Submissions, Modifications, and Withdrawals of Proposals (Overseas).

* * * * *

Late Submissions, Modifications, and Withdrawals of Proposals (Overseas) (Jul 1995)

(a) * * *

(2) Was transmitted through an electronic commerce method authorized by the solicitation and was received by the Government not later than 5:00 p.m. one working day prior to the date specified for receipt of proposals; or

* * * * *

(End of provision)

52.223–3 [Amended]

58. Section 52.223–3, Alternate I, is amended by removing ''(NOV 1991)'' and inserting ''(JUL 1995)'' in its place, and in the second sentence of paragraph (i)(1) by removing the word ''mail'' and inserting ''transmit'' in its place.

59. Section 52.242–12 is amended by revising the date in the clause heading and the second and third sentences of the clause to read as follows:

52.242–12 Report of Shipment (REPSHIP).

* * * * *

Report of Shipment (Repship) (Jul 1995)

* * * The notice shall be transmitted by rapid means to be received by the consignee transportation officer at least 24 hours before the arrival of the shipment. The Government bill of lading, commercial bill of lading or letter or other document that contains all of

the following shall be addressed and sent promptly to the receiving transportation officer. * * *

* * * * *

(End of clause)

60. Section 52.242–13 is amended by revising the date in the clause and the first sentence of the clause to read as follows:

52.242–13 Bankruptcy.

* * * * *

Bankruptcy (Jul 1995)

In the event the Contractor enters into proceedings relating to bankruptcy, whether voluntary or involuntary, the Contractor agrees to furnish, by certified mail or electronic commerce method authorized by the contract, written notification of the bankruptcy to the Contracting Officer responsible for administering the contract. * * *

61. Section 52.247–48 is amended by revising the introductory text, the date in the clause heading, redesignating the introductory text of the clause and paragraphs (a), (b), and (c) as (a) introductory text (a)(1), (a)(2), and (a)(3), respectively, adding new paragraph (b), and removing ''(R 7–104.76 1968 JUN)'' after ''(End of clause)'' to read as follows:

52.247–48 F.o.b. Destination—Evidence of Shipment.

As prescribed in 47.305–4(c), insert the following clause:

F.O.B. Destination—Evidence of Shipment (Jul 1995)

* * * * *

(b) Electronic transmission of the information required by paragraph (a) of this clause is acceptable.

(End of clause)

PART 53—FORMS

62. Section 53.105 is revised to read as follows:

53.105 Computer generation.

(a) Agencies may computer-generate the Standard and Optional Forms prescribed in the FAR without exception approval (see 53.103), provided—

(1) The form is in an electronic format that complies with Federal Information Processing Standard Number 161; or

(2) There is no change to the name, content, or sequence of the data elements, and the form carries the Standard or Optional Form number and edition date.

(b) The forms prescribed by this part may be computer generated by the public. Unless prohibited by agency regulations, forms prescribed by agency FAR supplements may also be computer generated by the public. Computer generated forms shall either comply with Federal Information Processing Standard Number 161 or shall retain the name, content, or sequence of the data elements, and shall carry the Standard or Optional Form or agency number and edition date (see 53.111).

53.214 [Amended]

63. Section 53.214 is amended in paragraph (a) by removing ''14.407–1(d)'' and inserting ''14.408–1(d)(1)'' in its place.

[FR Doc. 95–16081 Filed 6–30–95; 8:45 am]

BILLING CODE 6820–EP–M

DEPARTMENT OF DEFENSE

GENERAL SERVICES ADMINISTRATION

NATIONAL AERONAUTICS AND SPACE ADMINISTRATION

48 CFR Parts 2, 3, 4, 5, 6, 8, 9, 13, 15, 16, 19, 20, 22, 23, 25, 27, 28, 29, 32, 36, 41, 42, 43, 44, 45, 46, 47, 49, 52, and 53

[FAC 90–29; FAR Case 94–770; Item III]

RIN 9000–AG18

Federal Acquisition Regulation; Simplified Acquisition Procedures/ FACNET

AGENCIES: Department of Defense (DOD), General Services Administration (GSA), and National Aeronautics and Space Administration (NASA).

ACTION: Interim rule with request for comment.

SUMMARY: This interim rule is issued pursuant to the new simplified acquisition and Federal Acquisition Computer Network (FACNET) requirements of the Federal Acquisition Streamlining Act of 1994 (the Act). This regulatory action was subject to Office of Management and Budget review under Executive Order 12866 dated September 30, 1993.

DATES: Effective Date: July 3, 1995.

Comment Date: Comments should be submitted to the FAR Secretariat at the address shown below on or before September 1, 1995, to be considered in the formulation of a final rule.

ADDRESSES: Interested parties should submit written comments to: General Services Administration, FAR Secretariat (VRS), 18th & F Streets NW., Room 4037, Attn: Ms. Beverly Fayson, Washington, DC 20405.

Please cite FAC 90–29, FAR case 94–770 in all correspondence related to this case.

FOR FURTHER INFORMATION CONTACT: Diana Maykowskyj, Team Leader, Simplified Acquisition Procedures/ FACNET Team, on (703) 274–6307 in reference to this FAR case. For general information, contact the FAR Secretariat, Room 4037, GS Building, Washington, DC 20405 (202) 501–4755. Please cite FAC 90–29, FAR Case 94–770, Simplified Acquisition Procedures.

SUPPLEMENTARY INFORMATION:

A. Background

The Federal Acquisition Streamlining Act of 1994, Pub. L. 103–355 (FASA), provides authorities that streamline the acquisition process and minimize burdensome Government-unique requirements. Major changes in the acquisition process as a result of the Act's implementation include the areas of commercial item acquisition, simplified acquisition procedures, the Truth in Negotiations Act and Federal Acquisition Computer Network (FACNET).

The terms ''simplified acquisition'' and ''Federal Acquisition Computer Network (FACNET)'' are defined by FASA. FASA defines the simplified acquisition threshold as $100,000. It limits use of simplified acquisition procedures by procurement activities not having certified Interim FACNET to procurements not exceeding $50,000. Use of simplified acquisition procedures is also limited to procurements not exceeding $50,000 if any agency does not have certified Full FACNET by January 1, 2000.

Review of the law and this implementing rule requires that the difference between the simplified acquisition threshold and the use of simplified acquisition procedures be recognized. The *simplified acquisition threshold* is $100,000. The authority to use *simplified acquisition procedures* at the $100,000 level depends on implementation and proper certification of FACNET.

This rule, the vast majority of which was published as a proposed rule in the **Federal Register** at 60 FR 12366, March 6, 1995, incorporates FAR Subpart 4.5 for FACNET information and guidance. FAR Subpart 4.5 provides definitions, certification information, and exemptions in accordance with FASA. FAR case 91–104 (''Electronic Commerce'') and this implementation of FASA are interdependent and are meant to be considered jointly. Reviewers are advised that FACNET is not a single electronic system that will be used by

all executive agencies. It is, however, a universal electronic capability that will permit potential contractors to, at a minimum, obtain information on proposed procurements, submit responses, query the system, and receive awards on a government-wide basis. Each agency will determine the system(s) that will be used by its procuring activities so that they can certify Interim FACNET for those activities and Full FACNET for the agency. The Act and this rule also provide for exempting individual procurements and procuring activities from the use of FACNET. This becomes significant when agencies certify Full FACNET which is based, in part, on the percentage of non-exempt transactions which were made through FACNET during the previous fiscal year.

Implementation of FACNET includes a vendor registration requirement for any business entity wishing to do business with the Government electronically. Contractor information will be submitted to the Central Contractor Registration in accordance with the Federal implementation conventions.

There are technical requirements and other procedures with respect to FACNET that are not appropriate for coverage in the FAR but are needed by executive agencies to fully implement FACNET. This information will be disseminated via other appropriate means.

Further, be advised that the micro-purchase coverage that appeared in the **Federal Register** on December 15, 1994, FAR case 94–771 will be merged with the SAT/FACNET coverage in the final rule. This will incorporate all of the FASA changes under simplified acquisition procedures.

This rule also implements section 4004 of FASA to reserve each contract for the purchase of goods or services that have an anticipated value greater than $2,500, but not greater than $100,000, for exclusive small business participation unless the contracting officer determines there is no reasonable expectation of obtaining offers from two or more small businesses that are competitive with market price, quality and delivery.

In implementing section 4004, the issue of the nonmanufacturer rule arose. Existing regulations allow a small business to furnish ''any domestic end product'' under procurements set-aside for small business and utilizing small purchase procedures. Based upon discussion with SBA's Office of Size Standards, it was determined that this automatic waiver of the non-manufacturers rule would not apply to acquisitions under the simplified acquisition threshold and its perpetuation would be in conflict with SBA's Size Regulations, which govern this issue. Based upon this advice, the rule requires all dealers submitting a bid or quotation on a procurement reserved for small business to furnish the product of a small business manufacturer unless the Small Business Administration has issued a waiver.

The reader should note the key features represented in FAR case 94–770 which will change the acquisition process significantly upon implementation and continue to do so as contracting offices/activities and agencies begin to certify and implement the use of FACNET. These key features are: the small purchase limitation of $25,000 becomes the simplified acquisition threshold of $100,000 (see 13.101); use of the simplified acquisition procedures is tied to FACNET—simplified acquisition procedures may be used up to $50,000 upon FAR implementation without FACNET and up to $100,000 upon interim FACNET certification (see 13.103)(b)); for non-FACNET acquisitions over $25,000, a synopsis for 15 days is still required; solicitation response time must provide a reasonable amount of time to afford potential offerors a reasonable opportunity to respond; the regulation exempts simplified acquisition procedures from 15 statutes and from certain provisions and clauses; contracting officers need to add any necessary clauses to the back of the purchase order form; and all purchases between $2,500 and $100,000 are reserved for small business (see 19.502–2).

In addition to what the Act provided, the SAT/FACNET Team has incorporated coverage that provides flexibility and latitude that encourages the contracting officer to use innovative approaches in awarding contracts, seek the ''best value'' for the Government which includes past performance and quality; permits use of other than fixed price orders/contracts, when authorized by the agency; encourages the use of options; and increases the property clause threshold to be commensurate with the implementation and certification of FACNET.

The most significant change in this rule is the implementation of FACNET which is addressed primarily in Subpart 4.5. FACNET will provide the capability of existing computer hardware and software to perform certain functions in a standard manner in order to provide one face to industry for the entire Government. FACNET is the preferred means for conducting all purchases under the simplified acquisition threshold ($100,000) and above the micro-purchase threshold ($2,500). Contracting offices/activities may not conduct acquisitions using simplified acquisition procedures between $50,000 and $100,000, until they have certified and implemented interim FACNET.

However, it is also significant to highlight what requirements did not change with FASA, such as the compliance with Part 8, required sources of supply; the policy on not splitting orders; requirement for posting $10,000 ($5,000 DOD); the need to synopsize over $25,000; the requirement for small business setasides; and contracting reporting.

This interim rule and the interim rule published elsewhere in this issue under FAR case 91–104, Electronic Contracting, are interdependent and are meant to be considered jointly.

B. Regulatory Flexibility Act

This rule is expected to have a significant economic impact on a substantial number of small entities within the meaning of the Regulatory Flexibility Act, 5 U.S.C. 601, *et seq.* This interim rule is designated to reduce the burden on entities desiring to do business with the Government and will apply to all large and small business entities, and all educational and nonprofit organizations who are interested in participating in Government acquisitions. The interim rule establishes the simplified acquisition threshold and sets forth policies and guidance for the implementation of FACNET pursuant to the Act. The implementation of Electronic Contracting and use of the Federal Acquisition Computer Network (FACNET) will provide for electronic exchange of acquisition information between the private sector and the Federal Government that will increase the opportunities for vendors currently doing business with the Government, particularly small businesses. It is recognized that an initial start-up cost will be incurred for the purchase of personal computer, modem, software, and telephone lines, estimated to be $1,500. Additionally, it is anticipated that most small businesses will subscribe to third party value added network (VAN) services to facilitate their communications with the Government's computers. The cost of advance subscription ranges from approximately $30 to $100 per month, depending on the type of services obtained. The interim rule does not duplicate, overlap, or conflict with any other Federal rules.

An initial Regulatory Flexibility Analysis (IRFA) in support of the interim rule has been prepared and will be provided to the Chief Council for Advocacy for the Small Business Administration. A copy of the IRFA may be obtained from the FAR Secretariat. Comments from small entities concerning the affected FAR parts will also be considered in accordance with 5 U.S.C. 610. Such comments must be submitted separately and cite 5 U.S.C. 601, *et seq.*, (FAR case 94–770), in correspondence.

C. Paperwork Reduction Act

This interim rule does impose an additional reporting or recordkeeping requirement on the public which requires the approval of the Office of Management and Budget under 44 U.S.C. 3501, *et seq.* Contractors will be required to electronically register with the Central Contractor Registration operated by the Defense Information Megacenter. The information to be provided is information currently reported under several existing forms including the SF–129, Solicitation Mailing List Application, the SF–3881, ACH Vendor/Miscellaneous Payment Enrollment Form, and the DD–1052, Request for Assignment of a Commercial and Government Entity (CAGE) Code. Contractors will also be required to provide information pertaining to their electronic data interchange (EDI) capabilities. Establishment of a central registration system should eliminate the need to submit multiple registrations with each contracting office the contractor is doing business with.

A request for approval of the information collection requirement concerning simplified acquisition procedures was submitted to OMB and approved through April 30, 1998, OMB Control 9000–0137. Public comments concerning this request were invited through a **Federal Register** notice at 60 FR 11659, March 2, 1995.

D. Determination to Issue an Interim Rule

A determination has been made under the authority of the Secretary of Defense (DOD), the Administrator of General Services (GSA), and the Administrator of the National Aeronautics and Space Administration (NASA) pursuant to section 22 of the Office of Federal Procurement Policy Act (41 U.S.C. 418b) that compelling reasons exist to promulgate this regulation as an interim rule.

The Simplified Acquisition Threshold Procedures/Federal Acquisition Computer Network (SAT/FACNET) rule (FAR Case 94–770) and the Electronic Contracting (EC) rule (FAR Case 91–104) benefit industry and Government by enhancing efficiency of contracting in an environment of declining personnel staffing and resulting increase in workload for contracting personnel. The rules are linked and require simultaneous promulgation. The proposed rules were published simultaneously in the **Federal Register** on March 6, 1995, with the public comment period closing on May 5, 1995. A public meeting was held on these rules on April 3, 1995, and no substantive comments were presented at the meeting.

Section 22 of the Office of Federal Procurement Policy Act permits issuance of procurement policies, regulations, procedures, or forms as interim rules prior to consideration of public comments when urgent and compelling circumstances make it impracticable to do otherwise. Urgent and compelling reasons exist to make these rules effective prior to full consideration of public comment. Proceeding with these interim rules is required to permit the Federal Government to cope with the fundamental downsizing of its acquisition workforce and the large end of fiscal year workload with diminished resources. The Federal Acquisition Streamlining Act of 1994 (FASA), and its provisions on SAT/FACNET, provide relief from various burdens that affect the Government acquisition process. For example, purchases under the new simplified acquisition approach will become far less complex than today. Using figures from the Department of Defense for illustrative purposes, large purchase solicitations run 29 pages on the average whereas non-automated small purchases are about 12 pages in length, and automated small purchase solicitations, used by some DOD purchasing activities, are even less, 1 to 2 pages. The beneficial results of implementing these FASA provisions are evidenced further by the time saved in awarding orders under the existing small purchase procedures as opposed to contracts above the small purchase threshold of $25,000. The current average lead-time for awards below $25,000 is 26 days, while above $25,000 the average lead-time is 90 days for sealed bids and 210 days for competitive negotiations. These timeframes will be reduced further by implementation of the simplified acquisition authority in this rule by establishing reasonable timeframes for submission of offers for simplified acquisitions in lieu of a rigid 30-day period. Through use of the simplified acquisition procedures for actions not exceeding $50,000, the lead-time for approximately 30,000 contracts per year will be reduced to a fraction of the current lead-time. Use of electronic commerce/electronic data interchange capabilities at procurement activities certified to use FACNET will reduce lead-times even further and will increase the number of contracts affected to approximately 45,000, since FACNET users will be able to use the newly authorized simplified acquisition threshold of $100,000 rather than only $50,000 where FACNET has not been certified. Use of electronic commerce/electronic data interchange at a DOD test site reduced lead-time to 11 days. Reducing the lead-time will allow the contracting community to be more responsive in spite of the already reduced personnel resources, focus its efforts on more complex procurements, reduce the cost of the procurement process for both Government and industry, and provide better service to the direct users of the acquisition system, and ultimately to the public.

FASA called for its implementation in the FAR by October 1, 1995, or earlier. Due to the time required to fully consider, analyze, and document the analysis of public comments received in response to these proposed rules, it is unlikely that the rules could be published in the FAR, promulgated to procurement personnel and contractors, have procurement personnel and contractors trained, and have the new rules in use by the beginning of the last quarter of the fiscal year. It is essential that these rules be made effective by the beginning of the last quarter of the fiscal year because of personnel downsizing that has already occurred and that is expected before the end of the fiscal year. Additionally, the workload in the last quarter of the fiscal year is the most demanding of the fiscal year. Introduction of new procedures and processes in the middle of that quarter would be counterproductive to efficiency and would require operations to be suspended while retraining of the workforce is accomplished. Therefore, the regulations in FAC 90–29 must be effective no later than July 3, 1995, to provide the Federal acquisition workforce the labor and cost saving benefits provided by the statute, or they must be delayed until the end of the fiscal year so as not to interfere with acquisition operations. Immediate implementation as an interim rule will permit time for training of the acquisition workforce, and FAR acquisition procedures to be fully

operational before the final quarter of FY 1995.

Pursuant to Public Law 98–577 and FAR 1.501, public comments received in response to these interim rules and the prior proposed rules will be considered in formulating the final rules.

List of Subjects in 48 CFR Parts 2, 3, 4, 5, 6, 8, 9, 13, 15, 16, 19, 20, 22, 23, 25, 27, 28, 29, 32, 33, 36, 41, 42, 43, 44, 45, 46, 47, 49, 52, and 53

Government procurement.

Dated: June 26, 1995.

Jeremy F. Olson,

Acting Deputy Project Manager for Implementation of the Federal Acquisition Streamlining Act of 1994.

Therefore, 48 CFR Chapter 1 is amended as set forth below:

1. The authority citation for 48 CFR parts 2, 3, 4, 5, 6, 8, 9, 13, 15, 16, 19, 20, 23, 25, 27, 28, 29, 32, 33, 36, 41, 42, 43, 44, 45, 46, 47, 49, 52, and 53 continues to read as follows:

Authority: 40 U.S.C. 486(c); 10 U.S.C. Chapter 137; and 42 U.S.C. 2473(c).

PART 2—DEFINITIONS OF WORDS AND TERMS

2. Section 2.201 is revised to read as follows:

2.201 Contract clause.

The contracting officer shall insert the clause at 52.202–1, Definitions, in solicitations and contracts except when the contract is not expected to exceed the simplified acquisition threshold in part 13. If the contract is for personal services, construction, architect-engineer services, or dismantling, demolition, or removal of improvements, the contracting officer shall use the clause with its Alternate I. Additional definitions may be included, provided they are consistent with the clause and the FAR.

PART 3—IMPROPER BUSINESS PRACTICES AND PERSONAL CONFLICTS OF INTEREST

3.102–2 [Amended]

2a. Section 3.102–2 is amended by revising the phrase ''in solicitations and contracts,'' to read ''in solicitations and contracts exceeding the simplified acquisition threshold,''.

3. Section 3.103–1 is amended by revising paragraph (a) to read as follows:

3.103–1 Solicitation provision.

* * * * *

(a) The acquisition is to be made under the simplified acquisition procedures in part 13;

* * * * *

4. Section 3.104–10 is amended by revising paragraph (c) to read as follows:

3.104–10 Solicitation provision and contract clauses.

* * * * *

(c) The contracting officer shall insert the clause at 52.203–10, Price or Fee Adjustment for Illegal for Improper Activity, in all solicitations where the resultant contract award is expected to exceed the simplified acquisition threshold (see part 13) and all contracts and modifications to contracts exceeding that threshold which do not already contain the clause when the modification is expected to exceed that threshold.

* * * * *

5. Section 3.404 is amended by revising paragraphs (b)(1) and (c) to read as follows:

3.404 Solicitation provision and contract clause.

* * * * *

(b) * * *

(1) The contract amount is expected to be at or below the simplified acquisition threshold in part 13;

* * * * *

(c) The contracting officer shall insert the clause at 52.203–5, Covenant Against Contingent Fees, in solicitations and contracts exceeding the simplified acquisition threshold in part 13.

6. Section 3.502–3 is revised to read as follows:

3.502–3 Contract clause.

The contracting officer shall insert the clause at 52.203–7, Anti-Kickback Procedures, in solicitations and contracts exceeding the simplified acquisition threshold in part 13.

7. Section 3.503–2 is revised to read as follows:

3.503–2 Contract clause.

The contracting officer shall insert the clause at 52.203–6, Restrictions on Subcontractor Sales to the Government, in solicitations and contracts exceeding the simplified acquisition threshold in part 13.

PART 4—ADMINISTRATIVE MATTERS

4.304 [Amended]

8. Section 4.304 is amended by adding the phrase ''greater than the simplified acquisition threshold'' at the end of the sentence.

9. Part 4 is amended by adding Subpart 4.5, consisting of sections 4.500 through 4.507, to read as follows:

Subpart 4.5—Electronic Commerce in Contracting

Sec.
4.505 Scope of subpart.
4.501 Definitions.
4.502 Policy.
4.503 Contractor registration.
4.504 FACNET functions.
4.505 FACNET certification.
4.505–1 Interim certification.
4.505–2 Full certification.
4.505–3 Governmentwide certification.
4.505–4 Contract actions excluded.
4.506 Exemptions.
4.507 Contract actions using simplified acquisition procedures.

4.500 Scope of subpart.

This subpart provides policy and procedures for the establishment and use of the Federal Acquisition Computer Network (FACNET) as required by Section 30 of the Office of Federal Procurement Policy (OFPP) Act (41 U.S.C. 426).

4.501 Definitions.

ANSI X.12 means the designation assigned by the American National Standards Institute (ANSI) for the structure, format, and content of electronic business transactions conducted through Electronic Data Interchange (EDI). ANSI is the coordinator and clearinghouse for national standards in the United States.

Electronic commerce (EC) means a paperless process including electronic mail, electronic bulletin boards, electronic funds transfer, electronic data interchange, and similar techniques for accomplishing business transactions. The use of terms commonly associated with paper transactions (e.g., ''copy'', ''document'', ''page'', ''printed'', ''sealed envelope'' and ''stamped'') shall not be interpreted to restrict the use of electronic commerce.

Electronic data interchange (EDI) means a technique for electronically transferring and string formatted information between computers utilizing established and published formats and codes, as authorized by the applicable Federal Information Processing Standards.

Federal Acquisition Computer Network (FACNET) means the Governmentwide Electronic Commerce/Electronic Data Interchange (EC/EDI) systems architecture for the acquisition of supplies and services that provides for electronic data interchange of acquisition information between the Government and the private sector, employs nationally and internationally recognized data formats, and provides universal user access.

Full FACNET means an agency has certified that it has implemented all of

the FACNET functions outlined in 4.504, and more than 75 percent of eligible contracts (not otherwise exempted from FACNET) in amounts exceeding the micro-purchase threshold, but not exceeding the simplified acquisition threshold (see Part 13), were entered into by the agency during the preceding fiscal year using FACNET.

Governmentwide FACNET means that the Federal Government has certified its FACNET capability, and more than 75 percent of eligible contracts (not otherwise exempted from FACNET) in amounts exceeding the micro-purchase threshold, but not exceeding the simplified acquisition threshold (see part 13), entered into by the executive agencies during the preceding fiscal year were made through full FACNET.

Interim FACNET means a contracting office has been certified as having implemented a capability to provide widespread public notice of, issue solicitations, and receive responses to solicitations and associated requests for information through FACNET. Such capability must allow the private sector to access notices of solicitations, access and review solicitations, and respond to solicitations.

Transaction Set means the data that is exchanged to convey meaning between Trading Partners engaged in EC/EDI.

Value-Added Network (VAN) means an entity that provides communications services, electronic mailboxing and other communications services for EDI transmissions.

Value-Added Service (VAS) means an entity that provides services beyond communications to its customers. These services may range from translation and segregation of the data to complete turn-key business system support for customers.

4.502 Policy.

(a) The Federal Government shall use FACNET whenever practicable or cost effective.

(b) FACNET is the preferred method of soliciting and receiving quotes and providing notice of Government purchase requirements exceeding the micro-purchase threshold and not exceeding the simplified acquisition threshold (see 13.103 (b)).

(c) Contracting officers may use FACNET for any contract action governed by the FAR, unless specifically exempted (see 4.506 and 13.106-1(a)(2)).

(d) Before using FACNET, or any other method of electronic data interchange, The agency head shall ensure that the electronic data interchange system is capable of ensuring authentication and confidentiality commensurate with the risk and magnitude of the harm from loss, misuse, or unauthorized access to or modification of the information.

4.503 Contractor registration.

(a) In order for a contractor to conduct electronic commerce with the Federal Government, the contractor must provide registration information to the Central Contractor Registration.

(b) The contractor will be required to submit information in accordance with the Federal implementation conventions of the ASC ANSI X.12 transaction set for contractor registration.

4.504 FACNET functions.

(a) FACNET will permit agencies to do the following electronically—

(1) Provide widespread public notice of contracting opportunities, and issue solicitations;

(2) Receive responses to solicitations and associated requests for information;

(3) Provide widespread public notice of contract awards and issuance of orders (including price);

(4) Receive questions regarding solicitations, if practicable;

(5) Issue contracts and orders, if practicable;

(6) Initiate payments to contractors, if practicable; and

(7) Archive data relating to each procurement action.

(b) FACNET will permit the private sector to do the following electronically—

(1) Access notices of solicitation;

(2) Access and review solicitations;

(3) Respond to solicitations;

(4) Receive contracts and orders, if practicable;

(5) Access information on contract awards and issuance of orders; and

(6) Receive payment by purchase card, electronic funds transfer, or other automated means, if practicable.

4.505 FACNET certification.

4.505–1 Interim certification.

(a) A contracting office is considered to have implemented interim FACNET if—

(1) The contracting office—

(i) Has implemented the FACNET functions described in 4.504(a)(1) and (2), and (b)(1), (2), and (3); and

(ii) Issues notices of solicitations and receives responses to solicitations in a system having those functions;

(2) The contracting office can use FACNET for contracts, not otherwise exempted (see 4.506), that exceed the micro-purchase threshold but do not exceed the simplified acquisition threshold; and

(3) the senior procurement executive of the agency, or the Under Secretary of Defense for Acquisition and Technology for the military departments and defense agencies, has certified to the Administrator of OFPP that the contracting office has implemented interim FACNET.

(b) The senior procurement executive of the agency, or the Under Secretary of Defense for Acquisition and Technology for the military departments and defense agencies, shall notify the private sector via the Commerce Business Daily that a contracting office of the agency has certified interim FACNET. The notice shall establish a date after which it will be required that all responses to solicitations issued by the contracting office through FACNET, must be submitted through FACNET, unless otherwise authorized.

4.505–2 Full certification.

(a) An agency is considered to have implemented full FACNET if—

(1) The agency has implemented all of the FACNET functions described in 4.504;

(2) During the entire preceding fiscal year, more than 75 percent of the agency's eligible contracts, not otherwise exempted (see 4.506), that exceeded the micro-purchase threshold but did not exceed the simplified acquisition threshold, were entered into vai FACNET; and.

(3) The head of the agency, with the concurrence of the Administrator of OFPP, has certified to the Congress that the agency has implemented full FACNET. For the Department of Defense, the certification shall be made by the Secretary of Defense for the Department as a whole.

(b) Eligible contracts do not include any class or classes of contracts that the Federal Acquisition Regulatory Council determines, after October 13, 1997, are not suitable for acquisition through FACNET.

4.505–3 Governmentwide certification.

The Federal Government is considered to have implemented Governmentwide FACNET if—

(a) During the preceding fiscal year, at least 75 percent of eligible contracts entered into by executive agencies, that exceeded the micro-purchase threshold but did not exceed the simplified acquisition threshold, were made via full FACNET; and

(b) the Administrator of OFPP has certified implementation of Governmentwide FACNET to the Congress.

4.505–4 Contract actions excluded.

For purposes of calculating the percentage of FACNET use referred to in 4.505–2 and 4.505–3, actions issued against established contracts, such as delivery orders, task orders, and in-scope modifications, shall not be included.

4.506 Exemptions.

The following are exempted from the use of FACNET as specified and shall not be considered when determining compliance with the requirements to implement FACNET:

(a) *Interim FACNET.* (1) Classes of procurements exempted by the head of the contracting activity after a written determination is made that FACNET processing of those procurements is not cost-effective or practicable; and specific purchases for which the contracting officer determines that it is not practicable or cost-effective to process via FACNET. Such determinations shall be centrally maintained at the contracting office.

(2) Contracts that do not require notice under subpart 5.2.

(b) *Full FACNET.* Contracts awarded by a contracting office (or a portion of a contracting office), if the office is exempted from use of FACNET by the head of the agency, or the Secretary of Defense for the military departments and defense agencies. Any such exemption shall be based on a written determination that FACNET processing is not cost-effective or practicable for the contracting office, or portions thereof. Determinations shall be maintained in the office of the senior procurement executive, or the Under Secretary of Defense for Acquisition and Technology for the military departments and defense agencies.

4.507 Contract actions using simplified acquisition procedures.

Contracting officers shall refer to section 12.106 for evaluation and documentation requirements when awarding contracts using simplified acquisition procedures.

10. Section 4.800 is revised to read as follows:

4.800 Scope of subpart.

This subpart prescribes requirements for establishing, maintaining, an disposing of contract files for all contractual actions. The application of this subpart to contracts awarded using the simplified acquisition procedures covered by part 13 is optional. (See also documentation requirements in 12.106–2.)

11. Section 4.804–1 is amended by revising paragraphs (a)(1) and (a)(2) to read as follows:

4.804–1 Closeout by the office administering the contract.

(a) * * *

(1) Files for contracts using simplified acquisition procedures should be considered closed when the contracting officer receives evidence of receipt of property and final payment, unless otherwise specified by agency regulations.

(2) Files for firm-fixed-price contracts, other than those using simplified acquisition procedures, should be closed within 6 months after the date on which the contracting officer receives evidence of physical completion.

* * * * *

12. Section 4.804–2 is amended by revising paragraph (a) to read as follows:

4.804–2 Closeout of the contracting office files if another office administers the contract.

(a) Contract files for contracts using simplified acquisition procedures should be considered closed when the contracting officer receives evidence of receipt of property and final payment, unless otherwise specified by agency regulation.

* * * * *

13. Section 4.805 is amended in the table in paragraph (b) by revising the entries in the ''Document'' column of paragraphs (b) (5), (10), (11), and the introductory text of (b)(13) to read as follows:

4.805 Storage, handling and disposal of contract files.

* * * * *

(b) * * *

Document	Retention Period
* * *	* *
(5) Unsuccessful offers or quotations that pertain to contracts using simplified acquisition procedures.	* * * * *
* * *	* *
(10) Records or documents other than those in paragraphs 4.805(b)(1)–(9) of this section pertaining to contracts using simplified acquisition procedures.	* * * * *
* * *	* *
(11) Records or documents other than those in paragraphs 4.805(b)(1)–(10) of this section pertaining to contracts not using simplified acquisition procedures.	* * * * *
* * *	* *
(13) Solicited and unsolicited unsuccessful offers and quotations above the simplified acquisition threshold in part 13:	* * * * *
* * *	* *

PART 5—PUBLICIZING CONTRACT ACTIONS

14. Section 5.101 is amended by revising paragraphs (a)(1), (a)(2) introductory text, and (a)(2)(ii) to read as follows:

5.101 Methods of disseminating information.

* * * * *

(a) * * *

(1) For proposed contract actions expected to exceed $25,000, by synopsizing in the Commerce Business Daily (CBD) (see 5.201); and

(2) For proposed contract actions expected to exceed $10,000 ($5,000 for Defense activities), but not expected to exceed $25,000, by displaying in a public place at the contracting office issuing the solicitation, an unclassified notice of the solicitation or a copy of the solicitation satisfying the requirements of 5.207 (c) and (f). The notice shall include a statement that all responsible sources may submit a quotation which, if timely received, shall be considered by the agency. Such information shall be posted not later than the date the solicitation is issued, and shall remain posted for at least 10 days or until after quotations have been opened, whichever is later.

* * * * *

(ii) The contracting officer need not comply with the display requirements of this section when the exemptions at 5.202(a)(1), (5) through (9), or (11) apply, or when oral or FACNET solicitations are used. The exemption from display requirements does not relieve the contracting officer from the responsibility to consider all quotations timely received from responsible sources.

* * * * *

15. Section 5.202 is amended by removing ''or'' at the end of (a)(11) and the period at the end of (a)(12) and inserting a semicolon in its place; and adding paragraphs (a)(13) and (a)(14) to read as follows:

5.202 Exceptions.

* * * * *

(a) * * *

(13) The contract action is for an amount expected to exceed $25,000 but

not expected to exceed the simplified acquisition threshold and is made by a contracting activity that has been certified as having implemented a system with interim (until December 31, 1999) or full (after December 31, 1999) FACNET and the contract action will be made through FACNET; or

(14) The contract action is for an amount at or below $250,000 and is made through certified FACNET after Governmentwide FACNET has been certified. This exception does not apply when the contract action is not made through certified FACNET (see subpart 4.5).

* * * * *

16. Section 5.203 is amended by redesignating paragraphs (b) through (f) as (c) through (g), adding a new paragraph (b) and revising newly designated (c), (d), and (e) to read as follows:

5.203 Publicizing and response time.

* * * * *

(b) The contracting officer shall establish a solicitation response time which will afford potential offerors a reasonable opportunity to respond for each contract action, including actions via FACNET, in an amount estimated to be greater than $25,000, but not greater than the simplified acquisition threshold. The contracting officer should consider the circumstances of the individual procurement, such as the complexity, commerciality, availability, and urgency, when establishing the solicitation response time.

(c) Agencies shall allow at least a 30 day response time for receipt of bids or proposals from the date of issuance of a solicitation if the contract action is expected to exceed the simplified acquisition threshold.

(d) Agencies shall allow at least a 30 day response time from the date of publication of a proper notice of intent to contract for architect-engineer services or before issuance of an order under a basic ordering agreement or similar arrangement if the contract action is expected to exceed the simplified acquisition threshold.

(e) Agencies shall allow at least a 45 day response time for receipt of bids or proposals from the date of publication of the notice required in 5.201 for contract actions categorized as research and development if the contract action is expected to exceed the simplified acquisition threshold.

* * * * *

17. Section 5.205 is amended by revising paragraph (d)(1) to read as follows:

5.205 Special situations.

* * * * *

(d) * * *

(1) Except when exempted by 5.202, contracting officers shall synopsize each proposed contract action for which the total fee (including phases and options) is expected to exceed $25,000. Reference shall be made to the appropriate CBD Numbered Note.

* * * * *

18. Section 5.207 is amended by redesignating paragraphs (c)(2)(xi) through (c)(2)(xv) as (c)(2)(xii) through (c)(2)(xvi), adding new paragraph (c)(2)(xi), and revising newly redesignated (c)(2)(xiv) to read as follows:

5.207 Preparation and transmittal of synopses.

* * * * *

(c) * * *

(2) * * *

(xi) For a contract action in an amount estimated to be greater than $25,000 but not greater than the simplified acquisition threshold, enter (A) a description of the procedures to be used in awarding the contract (e.g., request for oral or written quotation or solicitation), and (B) the anticipated award date.

* * * * *

(xiv) In the case of noncompetitive contract actions, insert a statement of the reason justifying other than full and open competition, and identify the intended source(s) (see 5.207(e)(3)).

* * * * *

19. Section 5.301 is amended by removing ''or'' after (b)(5); removing the period at the end of (b)(6) and inserting ''; or'' in its place; and adding a new (b)(7) to read as follows:

5.301 General.

* * * * *

(b) * * *

(7) The contract action is for an amount greater than $25,000 but not greater than the simplified acquisition threshold, the contract action is made by a contracting office that has been certified as having implemented a system with interim (until December 31, 1999) or full (after December 31, 1999) FACNET, and the contract action has been made through FACNET.

* * * * *

20. Section 5.303 is amended by revising the introductory text of paragraph (b) to read as follows:

5.303 Announcement of contract awards.

* * * * *

(b) *Local announcement.* Agencies may also release information on contract awards to the local press or other media. When local announcements are made for contract awards in excess of the simplified acquisition threshold in part 13, they shall include—

* * * * *

21. Section 5.503 is amended by revising paragraph (c)(1) to read as follows:

5.503 Procedures.

* * * * *

(c) *Forms.* (1) When contracting directly with the media for advertising, contracting officers—

(i) Shall use Standard Form 26, Award/Contract, or Standard Form 1447, Solicitation/Contract, when the dollar amount of the acquisition exceeds the simplified acquisition threshold; or

(ii) May use Optional Form 347, Order for Supplies or Services, or an approved agency form, when the dollar amount of the acquisition does not exceed the threshold for use of simplified acquisition procedures (see part 13).

* * * * *

PART 6—COMPETITION REQUIREMENTS

22. Section 6.001 is amended by revising paragraph (a) to read as follows:

6.001 Applicability.

* * * * *

(a) Contracts awarded using the simplified acquisition procedures of part 13;

* * * * *

PART 8—REQUIRED SOURCES OF SUPPLIES AND SERVICES

23. Section 8.203–1 is amended by revising paragraph (a)(1) to read as follows:

8.203–1 Contract clause and solicitation provision.

(a) * * *

(1) Contract actions not exceeding the simplified acquisition threshold in part 13;

* * * * *

24. Section 8.404 is amended by revising the last sentence of paragraph (a) to read as follows:

8.404 Using schedules.

(a) * * * When placing orders under a Federal Supply Schedule, ordering activities need not seek further competition, synopsize the requirement, make a separate determination of fair and reasonable pricing, or consider small business set-asides in accordance with subpart 19.5.

* * * * *

PART 9—CONTRACTOR QUALIFICATIONS

25. Section 9.405–2 is amended by revising the second sentence of paragraph (b) introductory text to read as follows:

9.405–2 Restrictions on subcontracting.

* * * * *

(b) * * * Contractors shall not enter into any subcontract in excess of $25,000 with a contractor that has been debarred, suspended, or proposed for debarment unless there is a compelling reason to do so. * * *

* * * * *

26. Section 9.409 is revised to read as follows:

9.409 Solicitation provision and contract clause.

(a) The contracting officer shall insert the provision at 52.209–5, Certification Regarding Debarment, Suspension, Proposed Debarment, and Other Responsibility Matters, in solicitations where the contract value is expected to exceed the simplified acquisition threshold.

(b) The contracting officer shall insert the clause at 52.209–6, Protecting the Government's Interests when Subcontracting with Contractors Debarred, Suspended, or Proposed for Debarment, in solicitations and contracts where the contract value exceeds $25,000.

27. Section 9.507–1 is amended by revising paragraph (c) to read as follows:

9.507–1 Solicitation provisions.

* * * * *

(c) The contracting officer shall insert the provision at 52.209–8, Organizational Conflicts of Interest Certificate—Advisory and Assistance Services, in solicitations for advisory and assistance services if the contract is expected to exceed the simplified acquisition threshold.

* * * * *

PART 13—SIMPLIFIED ACQUISITION PROCEDURES

27a. The heading of part 13 is revised to read as set forth above.

28. Section 13.000 is revised to read as follows:

13.000 Scope of part.

This part prescribes policies and procedures for the acquisition of supplies and services, including construction and research and development, the aggregate amount of which does not exceed the simplified acquisition threshold (see 13.103(b)). See 36.602–5 for simplified procedures to be used when acquiring architect-engineering services.

29. Section 13.101 is amended by revising the definitions of ''delivery order'' and ''purchase order''; removing the definitions of ''small purchase'', and ''small purchase procedures''; and adding, in alphabetical order, definitions for ''imprest fund'', ''simplified acquisition procedures'', and ''simplified acquisition threshold''.

13.101 Definitions.

* * * * *

Delivery order means an order for supplies or services placed against an established contract or with Government sources of supply.

* * * * *

Imprest fund means a cash fund of a fixed amount established by an advance of funds, without charge to an appropriation, from an agency finance or disbursing officer to a duly appointed cashier, for disbursement as needed from time to time in making payment in cash for relatively small amounts.

* * * * *

Purchase order means an offer by the Government to buy supplies or services, including construction and research and development, upon specified terms and conditions, using simplified acquisition procedures.

Simplified acquisition procedures means the methods prescribed in this part for making purchases of supplies or services using imprest funds, purchase orders, blanket purchase agreements, Governmentwide commercial purchase cards, or any other appropriate authorized method.

Simplified acquisition threshold means $100,000 (but see 13.103(b)). In the case of any contract to be awarded and performed, or purchase to be made, outside the United States in support of a contingency operation, the term means $200,000.

30. Section 13.102 is revised to read as follows:

13.102 Purpose.

The purpose of this part is to prescribe simplified acquisition procedures in order to—

(a) Reduce administrative costs;

(b) Improve opportunities for small business and small disadvantaged business concerns to obtain a fair proportion of Government contracts;

(c) Promote efficiency and economy in contracting; and,

(d) Avoid unnecessary burdens for agencies and contractors.

31. Section 13.103 is revised to read as follows:

13.103 Policy.

(a) Simplified acquisition procedures shall be used to the maximum extent practicable for all purchases of supplies or services not exceeding the simplified acquisition threshold unless requirements can be met by using required sources of supply under part 8 (e.g., Federal Prison Industries, Committee for Purchase from People who are Blind or Severely Disabled, and Federal Supply Schedule contracts) or orders under Federal Information Processing multiple award schedule contracts.

(b) Simplified acquisition procedures may not be used for contract actions exceeding $50,000, and not exceeding the simplified acquisition threshold, unless the contracting office making the purchase has been certified as having interim FACNET in accordance with 4.505–1. The contracting office shall not use simplified acquisition procedures for contract actions exceeding $50,000 after December 31, 1999, unless the office's cognizant agency has certified full FACNET capability in accordance with 4.505–2.

(c) Simplified acquisition procedures shall not be used in the acquisition of supplies and services initially estimated to exceed the simplified acquisition threshold even though resulting awards do not exceed that threshold. Requirements aggregating more than the simplified acquisition threshold shall not be broken down into several purchases that are less than the threshold merely to permit use of simplified acquisition procedures.

(d) Simplified acquisition procedures may be used to acquire personal services if the agency has specific statutory authority to acquire personal services (see 37.104).

(e) FACNET is the preferred means for acquiring supplies and services, including construction and research and development, in amounts exceeding the micro-purchase threshold but not exceeding the simplified acquisition threshold.

(f) Contracting officers shall establish deadlines for the submission of responses to solicitations which afford contractors a reasonable opportunity to respond.

(g) Contracting officers are encouraged to use innovative approaches in awarding contracts using the simplified acquisition procedures under the authority of this part. For example, the procedures of other FAR parts may, as appropriate, be adapted for use in awarding contracts under this part. Other FAR parts that may be adapted include, but are not limited to—

(1) Part 14, Sealed Bidding;

(2) Part 15, Contracting by Negotiation;

(3) Part 11, Acquisition and Distribution of Commercial Products; and

(4) Part 36, Construction and Architect-Engineer Contracts, including the use of Standard Form 1442, Solicitation, Offer and Award (Construction, Alteration, or Repair), for construction contracts (see 36.701(b)).

32. Section 13.104 is revised to read as follows:

13.104 Procedures.

(a) Contracting officers shall make awards under this part in the simplified manner that is most suitable, efficient, and economical in the circumstances of each acquisition. Contracting officers may use the procedures in this part in acquisitions from Government supply sources (see part 8), if their use is authorized by the basic contract or concurred in by the source.

(b) Related items (such as small hardware items or spare parts for vehicles) may be included in one solicitation and the award made on an ''all-or-none'' basis if suppliers are so advised when quotations are requested.

(c) Agencies shall use bulk funding to the maximum extent practicable to reduce processing time, handling, and documentation. Bulk funding is particularly appropriate if numerous purchases using the same type of funds are to be made during a given period.

(d) Agencies shall inspect items or services acquired under simplified acquisition procedures as prescribed in 46.404.

(e) Agencies shall use United States-owned foreign currency, if appropriate, in making payments when using simplified acquisition procedures (see subpart 25.3).

(f) For proposed purchases covered by this part, see 5.101 for public display and synopsis requirements.

(g) When a quotation, oral or written, is to be rejected because a small business firm is determined to be nonresponsible (see subpart 9.1), see subpart 19.6 with respect to certificates of competency.

33. Section 13.105 is revised to read as follows:

13.105 Small business set-asides.

(a) Except as provided in paragraphs (b) and (c) of this section, each acquisition (non-FACNET and FACNET) of supplies or services that has an anticipated dollar value exceeding $2,500 and not exceeding $100,000, is reserved exclusively for small business concerns and shall be set aside (see subpart 19.5).

(b) The requirements of this section apply only to purchases in the United States, its territories and possessions, Puerto Rico, and the Trust Territory of the Pacific Islands (see 19.000). Foreign concerns shall not be solicited for acquisitions set aside for small business concerns.

(c)(1) Each written solicitation under a set-aside shall contain the appropriate provisions or clauses prescribed by Part 19. If the solicitation is oral, however, information substantially identical to that which is in the provision or clause shall be given to potential quoters.

(2) If the contracting officer determines there is no reasonable expectation of obtaining quotations from two or more responsible small business concerns that will be competitive in terms of market price, quality, and delivery, the contracting officer need not proceed with the small business set-aside and may purchase on an unrestricted basis. If the SBA procurement center representative disagrees with a contracting officer's decision not to proceed with the small business set-aside, the SBA procurement center representative may appeal the decision in accordance with the procedures set forth in 19.505.

(3) If the contracting officer proceeds with the set-aside and receives a quotation from only one responsible small business concern at a reasonable price (see 13.106–2(a)), the contracting officer shall make an award to that concern. However, if the contracting officer does not receive a reasonable quotation from a responsible small business concern, the contracting officer may cancel the set-aside and complete the purchase on an unrestricted basis.

(4) If the purchase is on an unrestricted basis under 13.105(c)(2), the contracting officer shall document in the file the reasons for the unrestricted purchase.

(5) See part 19 for policy concerning—

(i) Contracting with the Small Business Administration under the 8(a) Program (subpart 19.8);

(ii) Emerging small business set-aside (19.1006(c)); and

(iii) The Small Business Competitiveness Demonstration Program (subpart 19.10).

34. Section 13.106 text is removed and the heading is revised to read as follows:

13.106 Purchases exceeding the micro-purchase threshold.

35. Section 13.106–1 is added to read as follows:

13.106–1 Soliciting competition, evaluation of quotas, and award.

(a) *Soliciting competition.* (1) Contracting officers shall solicit a reasonable number of sources to promote competition to the maximum extent practicable, and to ensure that the purchase is advantageous to the Government, based, as appropriate, on either price alone or price and other factors (e.g., past performance and quality) including the administrative cost of the purchase. Requests for quotations or solicitations shall notify suppliers of the basis upon which award is to be made.

(2) FACNET is the preferred method of soliciting simplified acquisitions. However, if FACNET is not available, or if the contracting officer has made a determination that it is not practicable or cost-effective to process a specific purchase via FACNET, or if the head of the contracting activity has made a determination that it is not practicable or cost-effective to process a class of purchases via FACNET (see 4.506), quotations may be solicited through other appropriate means. Requests for quotations should be solicited orally to the maximum extent practicable for contract actions not expected to exceed $25,000, when FACNET is not available or a determination has been made that it is not practicable or cost-effective to purchase via FACNET. Oral solicitations may not be practicable for most contract actions exceeding $25,000 because of the synopsis requirement in 5.101. A synopsis may incorporate enough information for the contracting officer to receive oral quotes. The contracting officer is not required to issue a separate written solicitation. Paper solicitations for contract actions not expected to exceed $25,000 should only be issued when obtaining electronic or oral quotations is not considered economical or practical. Solicitations for construction contracts over $2,000 shall only be issued electronically or by paper solicitation.

(3) When not soliciting quotations electronically, maximum practicable competition ordinarily can be obtained without soliciting quotations or offers from sources outside the local trade area. Generally, solicitation of at least three sources may be considered to promote competition to the maximum extent practicable if the contract action does not exceed $25,000. If practicable, two sources not included in the previous solicitation should be requested to furnish quotations. The following factors influence the number of quotations required in connection with any particular purchase:

(i) The nature of the article or service to be purchased and whether it is highly competitive and readily available in several makes or brands, or is relatively noncompetitive.

(ii) Information obtained in making recent purchases of the same or similar item.

(iii) The urgency of the proposed purchase.

(iv) The dollar value of the proposed purchase.

(v) Past experience concerning specific dealers' prices.

(4) Contracting officers may solicit from one source if the contracting officer determines that the circumstances of the contract action deem only one source reasonably available (e.g., urgency).

(5) Contracting officers shall not limit solicitations to suppliers of well known and widely distributed makes or brands, or solicit quotations on a personal preference basis. If it is necessary to maintain a list of sources, new supply sources disclosed through trade journals or other media shall be continuously reviewed and, if appropriate, added to the list.

(6) In accordance with 14.408–3, contracting officers shall make every effort to obtain trade and prompt payment discounts. However, prompt payment discounts shall not be considered in the evaluation of quotations.

(7)(i) Unless exempted from this requirement by the head of the contracting activity, or unless purchases are made through FACNET, each contracting office should maintain a source list (or lists, if more convenient) and should record on the list the status of each source (when the status is made known to the contracting office) in the following categories:

(A) Small business.

(B) Small disadvantaged business.

(C) Women-owned small business.

(ii) The status information should be used to ensure that small business concerns are given opportunities to respond to solicitations issued using simplified acquisition procedures.

(b) *Evaluation of quotes or offers.* (1) Contracting officers may evaluate quotations or offers based on price alone or price and other factors (e.g., past performance, or quality). Formal evaluation plans, conduct of discussions, and scoring of quotes or offers are not required. Evaluation of other factors does not require the creation or existence of a formal data base, but may be based on such information as the contracting officer's knowledge, previous experience, or customer surveys.

(2) Standing price quotations may be used in lieu of obtaining individual quotations each time a purchase is contemplated. In such cases, the buyer shall ensure that the price information is current and that the Government obtains the benefit of maximum discounts before award is made.

(3) Contracting officers shall evaluate quotations inclusive of transportation charges from the shipping point of the supplier to the delivery destination.

(4) Contracting officers shall comply with the policy in 7.202 relating to economic purchase quantities, when practicable.

(c) *Award.* (1) Occassionally an item can be obtained only from a supplier who quotes a minimum order price or quantity that either unreasonably exceeds stated quantity requirements or results in an unreasonable price for the quantities required. In these instances, the contracting officer should inform the requiring activity of all facts regarding the quotation and ask it to confirm or alter its requirement. The file shall be documented to support the final action taken.

(2) Notification to unsuccessful suppliers shall be given only if requested. When a supplier requests information on an award which was based on factors other than price alone, the notification shall include a brief explanation of the basis for the contract award decision. (See 15.1001(c)(3).)

36. Section 13.106–2 is added to read as follows:

13.106–2 Data to support purchases.

(a) The determination that a proposed price is reasonable should be based on competitive quotations. If only one response is received, or the price variance between multiple responses reflects lack of adequate competition, a statement shall be included in the contract file giving the basis of the determination of fair and reasonable price. The determination may be based on a comparison of the proposed price with prices found reasonable on previous purchases, current price lists, catalogs, advertisements, similar items in a related industry, value analysis, the contracting officer's personal knowledge of the item being purchased or any other reasonable basis.

(b) When other than price related factors are considered in selecting the supplier (see 13.106–1(b)(1)), the contracting officer shall document the file to support the final contract award decision.

(c) If only one source is solicited, an additional notation shall be made to explain the absence of competition, except for acquisition of utility services available only from one source or of educational services from nonprofit institutions.

(d) Simplified documentation practices should be used. The following illustrate the extent to which quotation information should be recorded.

(1) *Oral solicitations.* The contracting office should establish and maintain informal records of oral price quotations in order to reflect clearly the propriety of placing the order at the price paid with the supplier concerned. In most cases this will consist merely of showing the names of the suppliers contacted and the prices and other terms and conditions quoted by each.

(2) *Written solicitations (see 2.101).* Written records of solicitations may be limited to notes or abstracts to show prices, delivery, references to printed price lists used, the supplier or suppliers contacted, and other pertinent data.

(e) Purchasing offices shall retain data supporting purchases using simplified acquisition procedures to the minimum extent and duration necessary for management review purposes (see Subpart 4.8).

37. Section 13.107 is revised to read as follows:

13.107 Solicitation forms.

(a) Except when quotations are solicited via FACNET or orally, Standard Form 18, Request for Quotations (53.301–18), is available, but not required, for use by all agencies.

(b) Optional Form 336, Continuation Sheet, may be used with Standard Form 18 when additional space is needed.

(c) If Standard Form 18 is not used for written solicitations, contracting officers may request quotations using an agency-designed form, an agency-approved automated format, or electronically.

(d) Each agency-designed request for quotations form shall conform with Standard Form 18, to the maximum extent practicable.

(e) When using an unsigned electronic purchase order (see 13.506) for transmission of a request for quotations, the provisions and clauses applicable to the solicitation shall be incorporated by reference.

38. Section 13.108 is revised to read as follows:

13.108 Legal effect of quotations.

(a) A quotation is not an offer and, consequently, cannot be accepted by the Government to form a binding contract (see 15.402(e)). Therefore, issuance by the Government of an order for supplies or services in response to a supplier's quotation does not establish a contract. The order is an offer by the Government

to the supplier to buy certain supplies or services upon specified terms and conditions. A contract is established when the supplier accepts the offer or begins performance.

(b) When appropriate, the contracting officer may ask the supplier to indicate acceptance of an order by notification to the Government, preferably in writing. In other circumstances, the supplier may indicate acceptance by furnishing the supplies or services ordered or by proceeding with the work to the point where substantial performance has occurred.

(c) If the Government issues an order resulting from a quotation, the Government may (by written notice to the supplier, at any time before acceptance occurs) withdraw, amend, or cancel its offer. (See 13.504 for procedures on termination or cancellation of purchase orders.)

38. Section 13.109 is revised to read as follows:

13.109 Agency use of indefinite delivery contracts.

Cost and processing time for acquisitions at or below the simplified acquisition threshold may be reduced through the use of indefinite delivery contracts (see subpart 16.5) that permit delivery orders to be placed by several contracting or ordering offices in one or more executive agencies. Therefore, contracting offices are encouraged to seek opportunities to cooperate with each other to achieve efficiency and economy through the use of indefinite delivery contracts.

40. Section 13.110 is added to read as follows:

13.110 Federal Acquisition Streamlining Act of 1994 (FASA) list of inapplicable laws.

(a) The following laws are inapplicable to all contracts and subcontracts (if otherwise applicable to subcontracts) at or below the simplified acquisition threshold:

(1) 41 U.S.C. 57 (a) and (b) (Anti-Kickback Act of 1986). (Only the requirement for the incorporation of the contractor procedures for the prevention and detection of violations, and the contractual requirement for contractor cooperation in investigations are inapplicable.)

(2) 40 U.S.C. 27 (Miller Act).

(3) 40 U.S.C. 329 (Contract Work Hours and Safety Standards Act—Overtime Compensation).

(4) 41 U.S.C. 701(a)(1) (Section 5152 of the Drug Free Workplace Act of 1988), except for individuals.

(5) 42 U.S.C. 6962 (Solid Waste Disposal Act) (Only the requirement for providing the estimate of recovered material utilized in the performance of the contract is inapplicable).

(6) 10 U.S.C. 2306(b) and 41 U.S.C. 254(a) (Contract Clause Regarding Contingent Fees).

(7) 10 U.S.C. 2313 and 41 U.S.C. 254(c) (Authority to Examine Books and Records of Contractors).

(8) 10 U.S.C. 2384(b) (Requirement to Identify Suppliers and Sources of Supply).

(9) 10 U.S.C. 2393(d) (Prohibition Against Doing Business with Certain Offerors or Contractors).

(10) 10 U.S.C. 2402 and 41 U.S.C. 253g (Prohibition on Limiting Subcontractor Direct Sales to the United States).

(11) 10 U.S.C. 2408(a) (Prohibition on Persons Convicted of Defense Related Felonies).

(12) 10 U.S.C. 2410b (Contractor Inventory Accounting System Standards).

(13) 10 U.S.C. 2534 (Miscellaneous Procurement Limitations).

(b) The Federal Acquisition Regulatory Council will include any law enacted after October 13, 1994, that sets forth policies, procedures, requirements, or restrictions for the procurement of property or services, on the list set forth in 13.110(a), unless the FAR Council makes a written determination that it is in the best interests of the Government that the enactment should apply to contracts or subcontracts not greater than the simplified acquisition threshold.

(c) The provisions of 13.110(b) do not apply to laws that—

(1) Provide for criminal or civil penalties; or

(2) Specifically state that notwithstanding the language of Section 4101, Pub. L. 103–355, the enactment will be applicable to contracts or subcontracts in amounts not greater than the simplified acquisition threshold.

(d) Any individual may petition the Administrator of the Office of Federal Procurement Policy to include any applicable provision of law not included on the list set forth in 13.110(a) unless the FAR Council has already determined in writing that the law is applicable. The Administrator of OFPP will include the law on the list in 13.110(a) unless the FAR Council makes a determination that it is applicable within sixty days of receiving the petition.

41. Section 13.111 is added to read as follows:

13.111 Inapplicable provisions and clauses.

Pursuant to Pub. L. 103–355, the following provisions and clauses are inapplicable to contracts and subcontracts at or below the simplified acquisition threshold—

(a) 28.102–3, Miller Act requirements;

(b) 52.203–1, Officials Not to Benefit;

(c) 52.203–4, Contingent Fee Representation and Agreement;

(d) 52.203–5, Covenant Against Contingent Fees;

(e) 52.203–6, Restrictions on Subcontractor Sales to the Government;

(f) 52.203–7, Anti-Kickback Procedures;

(g) 52.215–1, Examination of Records by Comptroller General;

(h) 52.222–4, Contract Work Hours and Safety Standards Act—Overtime Compensation;

(i) 52.223–5, Certification Regarding a Drug-Free Workplace, except for individuals; and

(j) 52.223–6, Drug-Free Workplace, except for individuals.

42. Section 13.112 is added to read as follows:

13.112 Use of options in acquisitions using simplified acquisition procedures.

Options may be included in acquisitions using simplified acquisition procedures provided that the requirements of subpart 17.2 are met, and that the aggregate value of the acquisition and all options does not exceed the dollar threshold for use of simplified acquisition procedures under this part.

43. Subpart 13.2 is revised to read as follows:

Subpart 13.2—Blanket Purchase Agreements

Sec.
13.201 General.
13.202 [Reserved]
13.203 Establishment of Blanket Purchase Agreements.
13.203–1 General.
13.203–2 Clauses.
13.204 Purchases under Blanket Purchase Agreements.
13.205 Review procedures.
13.206 Completion of Blanket Purchase Agreements.

13.201 General.

(a) A blanket purchase agreement (BPA) is a simplified method of filling anticipated repetitive needs for supplies or services by establishing ''charge accounts'' with qualified sources of supply (see subpart 16.7 for additional coverage of agreements).

(b) BPAs should be established for use by the level responsible for providing supplies for its own operations or for other offices, installations, projects, or functions. Such levels, for example, may be organized supply points, separate independent or detached field parties, or one-person posts or activities.

(c) The use of BPAs does not exempt the agency from the responsibility for keeping obligations and expenditures within available funds.

13.202 [Reserved]

13.203 Establishment of Blanket Purchase Agreements.

13.203–1 General.

(a) The following are circumstances under which contracting officers may establish BPAs:

(1) If there is a wide variety of items in a broad class of goods (e.g., hardware) that are generally purchased but the exact items, quantities, and delivery requirements are not known in advance and may vary considerably.

(2) If there is a need to provide commercial sources of supply for one or more offices or projects in a given area that do not have or need authority to purchase otherwise.

(3) In any other case in which the writing of numerous purchase orders can be avoided through the use of this procedure.

(b) A BPA should be established without a purchase requisition.

(c) A BPA shall not cite accounting and appropriation data (see 13.204(e)(4)).

(d) BPAs should be made with firms from which numerous individual purchases will likely be made in a given period. For example, if past experience has shown that certain firms are dependable and consistently lower in price than other firms dealing in the same commodities, and if numerous purchases at or below the simplified acquisition threshold are usually made from such suppliers, it would be advantageous to establish BPAs with those firms.

(e) To the extent practical, BPAs for items of the same type should be placed concurrently with more than one supplier. All competitive sources should be given an equal opportunity to furnish supplies or services under BPAs.

(f) BPAs may also be established with Federal Supply Schedule contractors and Federal Information Processing Multiple Award Schedule contractors (see part 39), if not inconsistent with the terms of the applicable schedule contract.

(g) If it is determined that BPAs would be advantageous, suppliers should be contacted to make the necessary arrangements for securing maximum discounts, documenting the individual purchase transactions, periodic billing, and other necessary details.

(h) A BPA may be limited to furnishing individual items or commodity groups or classes, or it may be unlimited for all items or services that the source of supply is in a position to furnish.

(i) BPAs may be prepared and issued on any agency-authorized purchase order form.

(j) BPAs shall contain the following terms and conditions:

(1) *Description of agreement.* A statement that the supplier shall furnish supplies or services, described in general terms, if and when requested by the contracting officer (or the authorized representative of the contracting officer) during a specified period and within a stipulated aggregate amount, if any.

(2) *Extent of obligation.* A statement that the Government is obligated only to the extent of authorized purchases actually made under the BPA.

(3) *Pricing.* A statement that the prices to the Government shall be as low or lower than those charged the supplier's most favored customer for comparable quantities under similar terms and conditions, in addition to any discounts for prompt payment.

(4) *Purchase limitation.* A statement that specifies the dollar limitation for each individual purchase under the BPA (see 13.204(b)).

(5) *Notice of individuals authorized to purchase under the BPA.* A statement that a list of individuals authorized to purchase under the BPA, identified either by title of position or by name of individual, organizational component, and the dollar limitation per purchase for each position title or individual shall be furnished to the supplier by the contracting officer.

(6) *Delivery tickets.* A requirement that all shipments under the agreement, except subscriptions and other charges for newspapers, magazines, or other periodicals, shall be accompanied by delivery tickets or sales slips which shall contain the following minimum information:

(i) Name of supplier.

(ii) BPA number.

(iii) Date of purchase.

(iv) Purchase number.

(v) Itemized list of supplies or services furnished.

(vi) Quantity, unit price, and extension of each item, less applicable discounts (unit prices and extensions need not be shown when incompatible with the use of automated systems; *provided,* that the invoice is itemized to show this information).

(vii) Date of delivery or shipment.

(7) *Invoices.* One of the following statements (except that the statement in paragraph (j)(7)(iii) of this section should not be used if the accumulation of the individual invoices by the Government materially increases the administrative costs of this purchase method):

(i) A summary invoice shall be submitted at least monthly or upon expiration of this BPA, whichever occurs first, for all deliveries made during a billing period, identifying the delivery tickets covered therein, stating their total dollar value, and supported by receipt copies of the delivery tickets.

(ii) An itemized invoice shall be submitted at least monthly or upon expiration of this BPA, whichever occurs first, for all deliveries made during a billing period and for which payments has not been received. These invoices need not be supported by copies of delivery tickets.

(iii) When billing procedures provide for an individual invoice for each delivery, these invoices shall be accumulated; *provided,* that—

(A) A consolidated payment will be made for each specified period; and

(B) The period of any discounts will commence on the final date of the billing period or on the date of receipt of invoices for all deliveries accepted during the billing period, whichever is later.

(iv) An invoice for subscriptions or other charges for newspapers, magazines, or other periodicals shall show the starting and ending dates and shall state either that ordered subscriptions have been placed in effect or will be placed in effect upon receipt of payment.

(k) BPAs in which the fast payment procedure is used shall include the requirements stated under 13.303(b).

13.203–2 Clauses.

(a) The contracting officer shall insert in each BPA the clauses prescribed elsewhere in this part that are required for or applicable to the particular BPA.

(b) Unless a clause prescription specifies otherwise, (e.g., see 22.305(a)(1), 22.605(a)(5), or 22.1006), if the prescription includes a dollar threshold, the amount to be compared to that threshold is that of any particular order under the BPA.

13.204 Purchases under Blanket Purchase Agreements.

(a) The use of a BPA does not authorize purchases that are not otherwise authorized by law or regulation. For example, the BPA, being a method of simplifying the making of individual purchases, shall not be used to avoid the simplified acquisition threshold.

(b) Unless otherwise specified in agency regulations, individual

purchases under BPAs, except those BPAs established in accordance with 13.203–1(f), shall not exceed (i) $50,000, or (ii) $100,000 when the contracting office has certified interim FACNET (see 13.103(b)).

(c) The existence of a BPA does not justify purchasing from only one source or avoiding small business set-asides. The requirements of 13.105 and 13.106 also apply to each order under a BPA.

(d) If there is an insufficient number of BPAs to ensure maximum practicable competition for a particular purchase, the contracting officer shall—

(1) Solicit quotations from other sources and make the purchase as appropriate; and

(2) Establish additional BPAs to facilitate future purchases if—

(i) Recurring requirements for the same or similar items or services seem likely,

(ii) Qualified sources are willing to accept BPAs, and

(iii) It is otherwise practical to do so.

(e) Documentation of purchases under BPAs shall be limited to essential information and forms as follows:

(1) Purchases under BPAs generally should be made electronically, or orally when it is not considered economical or practical to use electronic methods.

(2) A paper purchase document may be issued if written communications are necessary to ensure that the vendor and the purchaser agree concerning the transaction.

(3) If a paper document is not issued, the essential elements (e.g., date, vendor, items or services, price, delivery date) shall be recorded on the purchase requisition, in an informal memorandum, or on a form developed locally for the purpose.

(4) Documentation of purchases under BPAs shall also cite the pertinent purchase requisitions and the accounting and appropriation data.

(5) When delivery is made or the services are performed, the vendor's sales document, delivery document, or invoice may (if it reflects the essential elements) be used for the purpose of recording receipt and acceptance of the items or services. However, if the purchase is assigned to another activity for administration, receipt and acceptance of supplies or services shall be documented by signature and date on the agency specified form by the authorized Government representative after verification and notation of any exceptions.

13.205 Review procedures.

(a) The contracting officer placing orders under a BPA, or the designated representative of the contracting officer, shall review a sufficient random sample of the BPA files at least annually to ensure that authorized procedures are being followed.

(b) The contracting officer that entered into the BPA shall—

(1) Ensure that each BPA is reviewed at least annually and, if necessary, updated at that time; and

(2) Maintain awareness of changes in market conditions, sources of supply, and other pertinent factors that may warrant making new arrangements with different suppliers or modifying existing arrangements.

(c) If an office other than the purchasing office that established a BPA is authorized to make purchases under that BPA, the agency that has jurisdiction over the office authorized to make the purchases shall ensure that the procedures in paragraph (a) of this section are being followed.

13.206 Completion of Blanket Purchase Agreements.

An individual BPA is considered complete when the purchases under it equal its total dollar limitation, if any, or when its stated time period expires.

44. Subpart 13.3 is revised to read as follows:

Subpart 13.3—Fast Payment Procedure

Sec.

13.301 General.
13.302 Conditions for use.
13.303 Preparation and execution of orders.
13.304 Responsibility for collection of debts.
13.305 Contract clause.

13.301 General.

The fast payment procedure allows payment under limited conditions to a contractor prior to the Government's verification that supplies have been received and accepted. The procedure provides for payment for supplies based on the contractor's submission of an invoice that constitutes a representation that—

(a) The supplies have been delivered to a post office, common carrier, or point of first receipt by the Government; and

(b) The contractor agrees to replace, repair, or correct supplies not received at destination, damaged in transit, or not conforming to purchase agreements.

13.302 Conditions for use.

If the conditions in paragraphs (a) through (f) of this section are present, the fast payment procedure may be used, provided that use of the procedure is consistent with the other conditions of the purchase. The conditions for use of the fast payment procedure are as follows:

(a) Individual orders do not exceed $25,000 except that executive agencies may permit higher dollar limitations for specified activities or items on a case-by-case basis.

(b) Deliveries of supplies are to occur at locations where there is both a geographical separation and a lack of adequate communications facilities between Government receiving and disbursing activities that will make it impractical to make timely payment based on evidence of Government acceptance. Use of the fast payment procedure would not be indicated, for example, for small purchases by an activity if material being purchased is destined for use at that activity and contract administration will be performed by the contracting office at that activity.

(c) Title to the supplies will vest in the Government—

(1) Upon delivery to a post office or common carrier for mailing or shipment to destination; or

(2) Upon receipt by the Government if the shipment is by means other than Postal Service or common carrier.

(d) The supplier agrees to replace, repair, or correct supplies not received at destination, damaged in transit, or not conforming to purchase requirements.

(e) The purchasing instrument is a firm-fixed price contract, a purchase order, or a delivery order for supplies.

(f) A system is in place to ensure—

(1) Documenting evidence of contractor performance under fast payment acquisitions;

(2) Timely feedback to the contracting officer in case of contractor deficiencies; and

(3) Identification of suppliers who have a current history of abusing the fast payment procedure (also see subpart 9.1).

13.303 Preparation and execution of orders.

(a) Except when orders are placed via FACNET, orders incorporating the fast payment procedure should be issued on Optional Form 347, Order for Supplies or Services, or other agency authorized purchase order form (see 13.204(e) for purchases under BPAs). Orders may be either priced or unpriced.

(b) Contracts, purchase orders, or BPAs using the fast payment procedure shall include the following:

(1) A requirement that the supplies be shipped transportation or postage prepaid.

(2) A requirement that invoices be submitted directly to the finance or other office designated in the order, or in the case of unpriced purchase orders, to the contracting officer (see 13.502(c)).

(3) The following statement on consignee's copy:

Consignee's Notification to Purchasing Activity of Nonreceipt, Damage, or Nonconformance

The consignee shall notify the purchasing office promptly after the specified date of delivery of supplies not received, damaged in transit, or not conforming to specifications of the purchase order. Unless extenuating circumstances exist, the notification should be made not later than 60 days after the specified date of delivery.

(4) A requirement that the contractor mark outer shipping containers ''FAST PAY.''

13.304 Responsibility for collection of debts.

The contracting officer shall be primarily responsible for collecting debts resulting from failure of contractors to properly replace, repair, or correct supplies lost, damaged, or not conforming to purchase requirements (see 32.605(b) and 32.606).

13.305 Contract clause.

The contracting officer shall insert the clause at 52.213–1, Fast Payment Procedure, in solicitations and contracts when the conditions in 13.302 are applicable and it is intended that the fast payment procedure be used in the contract (in the case of BPAs, the contracting officer may elect to insert the clause either in the BPA or in orders under the BPA).

45. Subpart 13.4 is revised to read as follows:

Subpart 13.4—Imprest Fund

Sec.
13.401 General.
13.402 Agency responsibilities.
13.403 Conditions for use.
13.404 Procedures.

13.401 General.

This subpart prescribes policies and procedures for using imprest funds to purchase supplies or services. Related policies and regulations concerning the establishment of and accounting for imprest funds, including the responsibilities of designated cashiers and alternates, are contained in Part IV of the Treasury Financial Manual for Guidance of Departments and Agencies, Title 7 of the General Accounting Office Policy and Procedures Manual for Guidance of Federal Agencies, and the agency implementing regulations. Agencies shall also be guided by the Manual of Procedures and Instructions for Cashiers, issued by the Financial Management Service, Department of the Treasury.

13.402 Agency responsibilities.

Each agency using imprest funds shall—

(a) Periodically review and determine whether there is continuing need for each fund established, and that amounts of those funds are not in excess of actual needs;

(b) Take prompt action to have imprest funds adjusted to a level commensurate with demonstrated needs whenever circumstances warrant such action; and

(c) Develop and issue appropriate implementing regulations. These regulations shall include (but are not limited to) procedures covering—

(1) Designation of personnel authorized to make purchases using imprest funds; and

(2) Documentation of purchases using imprest funds, including documentation of—

(i) Receipt and acceptance of supplies and services by the Government;

(ii) Receipt of cash payments by the suppliers; and

(iii) Cash advances and reimbursements.

13.403 Conditions for use.

Imprest funds may be used for purchases when—

(a) The transaction does not exceed $500 or such other limits as have been approved by the agency head;

(b) The use of imprest funds is considered to be advantageous to the Government; and

(c) The use of imprest funds for the transaction otherwise complies with any additional conditions established by agencies and with the policies and regulations referenced in 13.401.

13.404 Procedures.

(a) Each purchase using imprest funds shall be based upon an authorized purchase requisition.

(b) Normally, orders to suppliers should be placed orally and without soliciting competition if prices are considered reasonable.

(c) Purchases shall be distributed equitably among qualified suppliers.

(d) Prompt payment discounts shall be solicited.

(e) Any agency-authorized purchase order form or Standard Form 1165, Receipt for Cash-Subvoucher, may be used if a written order is considered necessary (e.g., if required by the supplier for discount, tax exemption, or other reasons). If a purchase order is used for this purpose, it shall be endorsed ''Payment to be made from Imprest Fund''.

(f) The individual authorized to make purchases using imprest funds shall—

(1) Furnish to the imprest fund cashier a copy of the purchase requisition annotated to reflect—

(i) That an imprest fund purchase has been made;

(ii) The unit prices and extensions;

(iii) The supplier's name and address; and

(iv) The date of anticipated delivery; and

(2) Require the supplier to include with delivery of the supplies an invoice, packing slip, or other sales instrument giving—

(i) The supplier's name and address;

(ii) List and quantity of items;

(iii) Unit prices and extensions; and

(iv) Cash discount, if any.

46. Subpart 13.5 is revised to read as follows:

Subpart 13.5—Purchase Orders

Sec.
13.501 General.
13.502 Unpriced purchase orders.
13.503 Obtaining contractor acceptance and modifying purchase orders.
13.504 Termination or cancellation of purchase orders.
13.505 Purchase order and related forms.
13.505–1 Optional Form (OF) 347, Order for Supplies or Services, and Optional Form 348, Order for Supplies or Services Schedule-Continuation.
13.505–2 [Reserved]
13.505–3 Standard Form 44, Purchase Order-Invoice-Voucher.
13.506 Unsigned electronic purchase orders.
13.507 Provisions and clauses.

13.501 General.

(a) Except as provided under the unpriced purchase order method (see 13.502), purchase orders shall be issued on a fixed-price basis unless otherwise authorized by agency procedures.

(b) Purchase orders shall include any trade and prompt payment discounts that are offered, consistent with the applicable principles in 14.408–3.

(c) Purchase orders shall specify the quantity of supplies or services ordered.

(d) Inspections under simplified acquisition procedures shall be as prescribed in part 46. Orders generally shall provide that inspection and acceptance will be at destination, and source inspection should be specified only if required by part 46. If inspection and acceptance are to be performed at destination, advance copies of the purchase order shall be furnished to consignee(s) for material receipt purposes. Receiving reports shall be accomplished immediately upon receipt and acceptance of material.

(e) F.o.b. destination shall be specified for supplies to be delivered within the United States, except Alaska and Hawaii, unless there are valid reasons to the contrary.

(f) Each purchase order shall contain a determinable date by which delivery of supplies or performance of services is required.

(g) The contracting officer's signature on purchase orders shall be in accordance with 4.101. Facsimile signature may be used in the procedure of purchase orders by automated methods.

(h) Distribution of copies of purchase orders and related forms shall be limited to those copies required for essential administration and transmission of contractual information.

13.502 Unpriced purchase orders.

(a) An unpriced purchase order is an order for supplies or services, the price of which is not established at the time of issuance of the order.

(b) An unpriced purchase order may be used only when—

(1) It is anticipated that the transaction will not exceed—

(i) $50,000; or

(ii) $100,000 when the contracting office of an agency has certified interim or full FACNET (see 13.103(b)).

(2) It is impractical to obtain pricing in advance of issuance of the purchase order; and

(3) The purchase if for—

(i) Repairs to equipment requiring disassembly to determine the nature and extent of repairs;

(ii) Material available from only one source and for which cost cannot be readily established; or

(iii) Supplies or services for which prices are known to be competitive but exact prices are not known (e.g., miscellaneous repair parts, maintenance agreements).

(c) Unpriced purchase orders may be issued by using written purchase orders or electronically (see 13.506). A realistic monetary limitation, either for each line item or for the total order, shall be placed on each unpriced purchase order. The monetary limitation shall be an obligation subject to adjustment when the firm price is established. The contracting office shall follow-up each order to ensure timely pricing. The contracting officer or the contracting officer's designated representative shall review the invoice price and, if reasonable (see 13.106–2(a)), process the invoice for payment.

13.503 Obtaining contractor acceptance and modifying purchase orders.

(a) When it is desired to consummate a binding contract between the parties before the contractor undertakes performance, the contracting officer shall require written acceptance of the purchase order by the contractor.

(b) A purchase order may be modified by use of—

(1) Standard Form 30, Amendment of Solicitation/Modification of Contract;

(2) An agency-designed form or an agency-approved automated format; or

(3) A purchase order form, if not prohibited by agency regulations.

(c) Each purchase order modification shall identify the order it modifies and shall contain an appropriate modification number.

(d) Contracting officers need not obtain a contractor's written acceptance of a purchase order modification, unless the written acceptance is—

(1) Determined by the contracting officer to be necessary to ensure the contractor's compliance with the purchase order as revised; or

(2) Required by agency regulations.

13.504 Termination or cancellation of purchase orders.

(a) If a purchase order that has been accepted in writing by the contractor is to be terminated, the contracting officer shall process the termination action as prescribed by part 49.

(b) If a purchase order that has not been accepted in writing by the contractor is to be canceled, the contracting officer shall notify the contractor in writing that the purchase order has been canceled, request the contractor's written acceptance of the cancellation, and proceed as follows:

(1) If the contractor accepts the cancellation and does not claim that costs were incurred as a result of beginning performance under the purchase order, no further action is required (i.e., the purchase order shall be considered canceled).

(2) If the contractor does not accept the cancellation or claims that costs were incurred as a result of beginning performance under the purchase order, the contracting officer shall process the termination action as prescribed by part 49.

13.505 Purchase order and related forms.

13.505–1 Optional Form (OF) 347, order for supplies or services, and Optional Form 348, order for supplies or services schedule-continuation.

(a) Optional Form 347 (illustrated in 53.302–347) and Optional Form 348 (illustrated in 53.302–348) are multipurpose forms designed for the following:

(1) Negotiated purchases of supplies or services.

(2) Delivery orders.

(3) Inspection and receiving reports.

(4) Invoices.

(b) Agencies may use order forms other than Optional Form 347 and 348 and may print on those forms the clauses they consider to be generally suitable for their purchases using simplified acquisition procedures. The clauses may include agency clauses, if they do not conflict with clauses prescribed by the FAR and are designated as agency clauses.

13.505–2 [Reserved]

13.505–3 Standard Form 44, purchase order-invoice-voucher.

(a) Standard Form 44, Purchase Order-Invoice-Voucher (illustrated in 53.301–44) is a pocket-size purchase order form designed primarily for on-the-spot, over-the-counter purchases of supplies and nonpersonal services while away from the purchasing office or at isolated activities. It is a multipurpose form that can be used as a purchase order, receiving report, invoice, and public voucher.

(b) Standard Form 44 may be used if all of the following conditions are satisfied:

(1) The amount of the purchase is at or below the micro-purchase threshold, except for purchases made under unusual and compelling urgency or in support of a contingency operation. Agencies may establish higher dollar limitations for specific activities or items.

(2) The supplies or services are immediately available.

(3) One delivery and one payment will be made.

(4) Its use is determined to be more economical and efficient than use of other simplified acquisition methods.

(c) General procedural instructions governing the use of Standard Form 44 are printed on the form and on the inside front cover of each book of forms.

(d) Since there is, for all practical purposes, simultaneous placing of purchase orders on Standard Form 44 and delivery of the items ordered, clauses are not required for purchases using this form.

(e) Agencies shall provide adequate safeguards regarding the control of forms and accounting for purchases.

13.506 Unsigned electronic purchase orders.

(a) An unsigned electronic purchase order (EPO) may be issued when the following conditions are present—

(1) Its use is more advantageous to the Government than any other simplified acquisition method;

(2) It is acceptable to the supplier;

(3) It is approved by the contracting officer;

(4) It does not require written acceptance by the supplier; and

(5) The purchasing office retains all contract administration functions.

(b) When an unsigned EPO is used—

(1) Appropriate clauses shall be incorporated by reference;

(2) Administrative information that is not needed by the supplier shall be placed only on copies intended for internal distribution;

(3) The same distribution shall be made of the unsigned EPO as is made of signed purchase orders; and

(4) No purchase order form is required.

(c) An unsigned EPO may be unpriced if it meets the conditions in 13.502.

13.507 Provisions and clauses.

(a) Each purchase order (and each purchase order modification (see 13.503)) shall incorporate all clauses required for or applicable to the particular acquisition.

(b) The contracting officer shall insert the clause at 52.213–2, Invoices, in purchase orders that authorize advance payments (see 31 U.S.C. 3324(d)(2)) for subscriptions or other charges for newspapers, magazines, periodicals, or other publications (i.e., any publication printed, microfilmed, photocopied, or magnetically or otherwise recorded for auditory or visual usage).

(c) The contracting officer shall insert the clause at 52.213–3, Notice to Supplier, in unpriced purchase orders.

PART 15—CONTRACTING BY NEGOTIATION

47. Section 15.106–1 is amended by revising paragraph (b)(1) to read as follows:

15.106–1 Examination of Record clause.

* * * * *

(b) * * *

(1) The contract amount is at or below the simplified acquisition threshold;

* * * * *

48. Section 15.106–2 is amended by revising the first sentence in paragraph (b) to read as follows:

15.106–2 Audit-Negotiation clause.

* * * * *

(b) The contracting officer shall insert the clause at 52.215–2, Audit-Negotiation, in solicitations and contracts when contracting by negotiation, unless the acquisition is made under simplified acquisition procedures. * * *

49. Section 15.401 is amended by revising paragraph (a) to read as follows:

15.401 Applicability.

* * * * *

(a) Acquisitions made under simplified acquisition procedures (see part 13); and

* * * * *

50. Section 15.602 is amended by revising paragraph (b) to read as follows:

15.602 Applicability.

* * * * *

(b) This subpart does not apply to acquisitions using simplified acquisition procedures (see part 13).

51. Section 15.804–2 is amended by revising the first sentence of paragraph (a)(3) introductory text; and (a)(4) and (a)(5) to read as follows:

15.804–2 Requiring certified cost or pricing data.

(a) * * *

* * * * *

(3) The contracting officer may obtain certified cost or pricing data for pricing actions below the pertinent threshold in paragraph (a)(1) of this section provided the action exceeds the simplified acquisition threshold. * * *

* * * * *

(4) The contracting officer shall not require certified cost or pricing data when awarding a contract below the simplified acquisition threshold in part 13.

(5) When certified cost or pricing data are not required, the contracting officer may request partial or limited data to determine a reasonable price.

* * * * *

52. Section 15.812–2 is amended by revising paragraph (a)(1) to read as follows:

15.812–2 Contract clause.

(a) * * *

(1) Acquisitions at or below the simplified acquisition threshold;

* * * * *

53. Section 15.1001 is amended by revising the first sentence of paragraph (b)(1), and (c)(1) introductory text and (c)(3) to read as follows:

15.1001 Notifications to unsuccessful offerors.

* * * * *

(b) * * * (1) When the proposal evaluation period for a solicitation not using simplified acquisition procedures in part 13 is expected to exceed 30 days, or when a limited number of offerors have been selected as being within the competitive range (see 15.609), the contracting officer, upon determining that a proposal is unacceptable, shall promptly notify the offeror. * * *

* * * * *

(c) *Postaward notices.* (1) After award of contracts resulting from solicitations not using simplified acquisition procedures, the contracting officer shall notify unsuccessful offerors in writing or electronically, unless preaward notice was given under paragraph (b) of this section. The notice shall include—

* * * * *

(3) Upon request, the contracting officer shall furnish the information described in 15.1001(c)(1) (i) through (v) to unsuccessful offerors in solicitations using simplified acquisition procedures in part 13.

PART 16—TYPES OF CONTRACTS

54. Section 16.000 is amended by revising the first sentence to read as follows:

16.000 Scope of part.

This part describes types of contracts that may be used in acquisitions other than those made under simplified acquisition procedures in part 13, unless otherwise authorized by agency procedures. * * *

55. Section 16.103 is amended by revising paragraph (d)(1) to read as follows:

16.103 Negotiating contract type.

* * * * *

(d) * * * (1) acquisitions made under simplified acquisition procedures in part 13, unless otherwise required under agency procedures,

* * * * *

56. Section 16.105 is revised to read as follows:

16.105 Solicitation provision.

The contracting officer shall complete and insert the provision at 52.216–1, Type of Contract, in a solicitation unless it is for—

(a) A fixed-price acquisition made under simplified acquisition procedures (see part 13); or

(b) Information or planning purposes.

PART 19—SMALL BUSINESS PROGRAMS

19.102 [Amended]

57. Section 19.102 is amended by removing paragraph (f)(3) and redesignating paragraphs (f)(4) through (f)(7) as (f)(3) through (f)(6).

58. Section 19.303 is amended by revising paragraph (a) to read as follows:

19.303 Determining product or service classifications.

(a) The contracting officer shall determine the appropriate standard industrial classification code and related small business size standard and include them in solicitations above the micro-purchase threshold in 13.101.

* * * * *

19.104 [Amended]

59. Section 19.304 is amended in paragraph (a) after the word ''solicitations'' by adding the parenthetical ''(other than micro-purchases)'', and in paragraphs (b), (c), and (d) by removing the parenthetical ''(other than those for small purchases)'' and inserting ''(other than micro-purchases)'' in its place.

19.501 [Amended]

60. Section 19.501 is amended by removing from paragraph (d) the phrase ''small purchase limitation in 13.000'' and inserting in its place ''micro-purchase threshold in 13.101''; by removing paragraphs (f) and (g) and redesignating paragraphs (h), (i), and (j) as (f), (g) and (h); and by removing the last two sentences from paragraph (c).

61. Section 19.502–1 is amended by adding a sentence at the end of paragraph (c) to read as follows:

19.502–1 Requirements for setting aside acquisitions.

* * * * *

(c) * * * This requirement does not apply to purchases of $2,500 or less, purchases from required sources of supply under part 8 (e.g., Federal Prison Industries, Committee for Purchase From People Who Are Blind or Severely Disabled, and Federal Supply Schedule contracts), or orders under Federal Information Processing (FIP) Multiple Award Schedule contracts.

62. Section 19.502–2 is revised to read as follows:

19.502–2 Total set-asides.

(a) Each acquisition of supplies or services that has an anticipated dollar value exceeding $2,500, but not over $100,000, is automatically reserved exclusively for small business concerns, unless the contracting officer is unable to obtain offers from two or more small business concerns that are competitive with market prices and with regard to the quality and delivery of the goods or services being purchased. This requirement does not preclude the award of a contract with a value not greater than $100,000 under 19.8, Contracting with the Small Business Administration, or under 19.1006(c), Emerging small business set-aside.

(b) The contracting officer shall set aside any acquisition over $100,000 for small business participation when there is a reasonable expectation that (1) offers will be obtained from at least two responsible small business concerns offering the products of different small business concerns (but see paragraph (c) of this subsection); and (2) awards will be made at fair market prices. Total small business set-asides shall not be made unless such a reasonable expectation exists (but see 19.502–3 as to partial set-asides). Although past acquisition history of the item or similar items is always important, it is not the only factor to be considered in determining whether a reasonable expectation exists. In making R&D small business set-asides, there must also be a reasonable expectation of obtaining from small businesses the best scientific and technological sources consistent with the demands of the proposed acquisition for the best mix of cost, performances, and schedules.

(c) For set-asides other than for construction or services, any concern proposing to furnish the product which it did not itself manufacture must furnish the product of a small business manufacturer unless the Small Business Administration has granted a waiver (see 19.102(f)). In industries where the SBA finds that there are no small business manufacturers, it may waive the nonmanufacturers rule for regular dealers (see 19.102(f)(4)). This would permit small business regular dealers to provide any firm's product. In these cases, the contracting officer's determination in paragraph (b)(1) of this subsection or the decision not to set-aside a procurement reserved for small business under paragraph (a) of this subsection will be based on the expectation of receiving offers from at least two responsible small business regular dealers offering the products of different concerns.

(d) The requirements of this subsection do not apply to acquisitions over $25,000 during the period when set-asides cannot be considered for the four designated industry groups (see 19.1006(b)).

19.502–3 [Amended]

63. Section 19.502–3 is amended in paragraph (a)(4) by removing the phrase ''small purchase procedures'' and inserting ''simplified acquisition procedures'' in its place.

64. Section 19.502–4 is amended by revising paragraph (a) to read as follows:

19.502–4 Methods of conducting set-asides.

(a) Total set-asides may be conducted by using simplified acquisition procedures (see part 13), sealed bids (see part 14), or competitive proposals (see part 15). Partial small business set-asides may be conducted using sealed bids (see part 14), or competitive proposals (see part 15).

* * * * *

65. Section 19.503 is amended by revising paragraph (c)(2) to read as follows:

19.503 Setting aside a class of acquisitions.

* * * * *

(c) * * *

(2) Provide that the set-aside does not apply to any acquisition automatically reserved for small business concerns under 19.502–2(a).

* * * * *

66. Section 19.506 is amended by revising the last sentence of paragraph (b) to read as follows:

19.506 Withdrawing or modifying set-asides.

* * * * *

(b) * * * However, the procedures are not applicable to automatic dissolutions of set-asides (19.507) or dissolutions of set-asides of acquisitions automatically reserved exclusively for small business concerns (19.502–2(a)).

* * * * *

19.508 [Amended]

67. Section 19.508 is amended by removing and reserving paragraph (a); by removing ''19.502–2(b)'' at the end of paragraphs (b), (c) and (d) and inserting ''19.502–2(c)'' in their place; by removing the word ''not'' in the last sentence of paragraphs (b), (c) and (d) and inserting ''no'' in their place; and by removing the phrase ''small purchase procedures'' in paragraph (e) and inserting ''simplified acquisition procedures'' in its place.

19.702 [Amended]

68. Section 19.702 is amended by removing the phrase ''small purchase limitation in 13.000'' from the introductory text and inserting ''the simplified acquisition threshold in 13.101'' in its place.

19.708 [Amended]

69. Section 19.708 is amended in paragraph (a) introductory text by removing the phrase ''small purchase limitation in 13.000'' and inserting ''the simplified acquisition threshold in 13.101'' in its place.

19.902 [Amended]

70. Section 19.902 is amended by removing the phrase ''small purchase limitation'' in the introductory text and inserting ''simplified acquisition threshold'' in its place.

19.1006 [Amended]

71. Section 19.1006 is amended in paragraph (c)(3) by removing the phrase ''small purchase'' and inserting ''simplified acquisition'' in its place.

PART 20—LABOR SURPLUS AREA CONCERNS

20.103 [Amended]

72. Section 20.103 is amended by removing the phrase ''appropriate small purchase limitation in part 13'' in paragraph (b) and inserting ''simplified acquisition threshold in 13.101'' in its place.

20.104 [Amended]

73. Section 20.104 is amended by removing the phrase ''appropriate small purchase limitation in part 13'' in the introductory text and inserting ''simplified acquisition threshold in 13.101'' in its place.

20.202 [Amended]

74. Section 20.202 is amended by removing the phrase ''appropriate small purchase limitation in part 13'' and inserting ''simplified acquisition threshold in 13.101'' in its place.

20.301 [Amended]

75. Section 20.301 is amended in paragraph (a) by removing the phrase ''appropriate small purchase limitation in part 13'' and inserting ''simplified acquisition threshold in 13.101'' in its place.

20.302 [Amended]

76. Section 20.302 is amended in paragraph (a) introductory text by removing the phrase ''appropriate small purchase limitation in part 13'' and inserting ''simplified acquisition threshold in 13.101'' in its place.

PART 22—APPLICATION OF LABOR LAWS TO GOVERNMENT ACQUISITIONS

22.202 [Amended]

77. Section 22.202 is amended in the introductory text by adding the phrase ''above the micro-purchase threshold,'' after ''contracts''.

78. Section 22.305 is amended by revising the first sentence of the introductory text and paragraph (a), removing paragraph (b) and redesignating paragraphs (c) through (h) as (b) through (g) to read as follows:

22.305 Contract clause.

The contracting officer shall insert the clause at 52.222–4, Contract Work Hours and Safety Standards Act-Overtime Compensation, in solicitations and contracts (including, for this purpose, basic ordering agreements) when the contract may require or involve the employment of laborers or mechanics. * * *

(a) Contracts at or below the simplified acquisition threshold.

* * * * *

22.1006 Contract clauses.

79. Section 22.1006 is amended by revising the heading to read as set forth above and by removing from the first two sentences of paragraphs (c)(1) and (c)(2) the phrase ''small purchase limitation'' and inserting ''simplified acquisition threshold'' in their places.

PART 23—ENVIRONMENT CONSERVATION, OCCUPATIONAL SAFETY, AND DRUG-FREE WORKPLACE

80. Section 23.101 is amended by revising the first sentence to read as follows:

23.101 Applicability.

This subpart does not apply to contracts at or below the simplified acquisition threshold or to the use of facilities outside the United States. * * *

81. Section 23.501 is amended by revising paragraph (a) to read as follows:

23.501 Applicability.

* * * * *

(a) Contracts at or below the simplified acquisition threshold; however, the requirements of this subpart shall apply to contracts of any value if the contract is awarded to an individual;

* * * * *

82. Section 23.504 is amended by revising the introductory text of paragraph (a) to read as follows:

23.504 Policy.

(a) No offeror other than an individual shall be considered a responsible source (see 9.104–1) for a contract that exceeds the simplified acquisition threshold, unless it has certified, pursuant to 52.223–5, Certification Regarding a Drug-Free Workplace, that it will provide a drug-free workplace by—

* * * * *

83. Section 23.505 is amended by revising paragraph (a)(2) to read as follows:

23.505 Solicitation provision and contract clause.

(a) * * *

(2) Expected to exceed the simplified acquisition threshold if the contract is expected to be awarded to other than an individual; or

* * * * *

PART 25—FOREIGN ACQUISITION

84. Section 25.302 is amended by revising paragraph (b)(1) to read as follows:

25.302 Policy.

* * * * *

(b) * * *

(1) The estimated cost of the product or service is at or below the simplified acquisition threshold in part 13.

* * * * *

85. Section 25.703 is amended by revising the third sentence to read as follows:

25.703 Exceptions.

* * * The approval level for this exception is the contracting officer for acquisitions at or below the simplified acquisition threshold unless otherwise provided by agency procedures. In the case of contracts in excess of the simplified acquisition threshold, the approval level is the agency head. * * *

PART 27—PATENTS, DATA, AND COPYRIGHTS

86. Section 27.201–2 is amended by revising paragraph (a) to read as follows:

27.201–2 Clauses on authorization and consent.

(a) The contracting officer shall insert the clause at 52.227–1, Authorization and Consent, in solicitations and contracts (including those for construction; architect-engineer services; dismantling, demolition, or removal of improvements; and noncommon carrier communication services), except when using simplified acquisition procedures or both complete performance and delivery are outside the United States, its possessions, and Puerto Rico. Although the clause is not required when simplified acquisition procedures are used, it may be used with them.

* * * * *

87. Section 27.202–2 is revised to read as follows:

27.202–2 Clause on notice and assistance.

The contracting officer shall insert the clause at 52.227–2, Notice and Assistance Regarding Patent and Copyright Infringement, in supply, service, or research and development solicitations and contracts (including construction and architect-engineer contracts) which anticipate a contract value above the simplified acquisition threshold, except when complete performance and delivery are outside the United States, its possessions, and Puerto Rico, unless the contracts indicate that the supplies or other

deliverables are ultimately to be shipped into one of those areas.

88. Section 27.203–1 is amended by revising paragraph (b)(4) to read as follows:

27.203–1 General.

* * * * *

(b) * * *

(4) When the contract is awarded using simplified acquisition procedures.

* * * * *

PART 28—BONDS AND INSURANCE

89. Section 28.103–2 is amended by revising the first sentence of paragraph (a) to read as follows:

28.103–2 Performance bonds.

(a) Performance bonds may be required for contracts exceeding the simplified acquisition threshold when necessary to protect the Government's interest. * * *

* * * * *

90. Section 28.310 is amended by revising paragraph (a) introductory text to read as follows:

28.310 Contract clause for work on a Government installation.

(a) The contracting officer shall insert the clause at 52.228–5, Insurance-Work on a Government Installation, in solicitations and contracts when a fixed-price contract is contemplated, the contract amount is expected to exceed the simplified acquisition threshold in part 13, and the contract will require work on a Government installation, unless—

* * * * *

PART 29—TAXES

91. Section 29.401–3 is revised to read as follows:

29.401–3 Competitive contracts.

The contracting officer shall insert the clause at 52.229–3, Federal, State, and Local Taxes, in solicitations and contracts if the contract is to be performed wholly or partly within the United States, its possessions, or Puerto Rico, when a fixed-price contract is contemplated and the contract is expected to exceed the simplified acquisition threshold in part 13, unless the clause at 52.229–4, Federal, State, and Local Taxes (Noncompetitive Contract), is included in the contract.

29.401–4 [Amended]

92. Section 29.401–4 is amended by removing the words ''small purchase limitation in 13.000'' after the words ''exceeds the'' and inserting ''simplified acquisition threshold in part 13'' in its place.

PART 32—CONTRACT FINANCING

93. Section 32.617 is amended by revising paragraph (a)(1) to read as follows:

32.617 Contract clause.

(a) * * *

(1) Contracts at or below the simplified acquisition threshold.

* * * * *

94. Section 32.901 is revised to read as follows:

32.901 Applicability.

This subpart applies to all Government contracts (including contracts at or below the simplified acquisition threshold as defined in subpart 13.1), except contracts with payment terms and late payment penalties established by other governmental authority (e.g., tariffs).

95. Section 32.908 is amended by revising paragraph (c) to read as follows:

32.908 Contract clauses.

* * * * *

(c) The contracting officer shall insert the clause at 52.232–25, Prompt Payment, in all other solicitations and contracts (including contracts at or below the simplified acquisition threshold in part 13), except as indicated in 32.901.

* * * * *

33.106 [Amended]

96. Section 33.106(a) is amended by removing ''other than small purchases'' and inserting ''contracts expected to exceed the simplified acquisition threshold'' in its place.

PART 36—CONSTRUCTION AND ARCHITECT-ENGINEER CONTRACTS

36.602–5 Short selection process for contracts not to exceed the simplified acquisition threshold.

97. The heading of 36.602–5 is revised to read as set forth above.

36.502, 36.503, 36.506, 36.508, 36.509, 36.510, 36.512, 36.513, 36.515, 36.521, 36.602–5, and 36.702 [Amended]

98. Part 36 is amended removing the phrase ''exceed the small purchase limitation'' and inserting ''exceed the simplified acquisition threshold'' in its place in the following locations: 36.502, 36.503, 36.506, 36.508, 36.509, 36.510, 36.512, 36.513(a), 36.515, 36.521, 36.602–5 introductory text, 36.702(b)(2).

36.511 and 36.701 [Amended]

99. Part 36 is amended by removing the phrase ''exceed the small purchase limitations'' and inserting ''exceed the simplified acquisition threshold'' in the following locations: 36.511 and 36.701(b).

36.502, 36.503, 36.506, 36.508, 36.509, 36.510, 36.512, 36.513, 36.521, and 36.701 [Amended]

100. Part 36 is amended by removing the phrase ''within the small purchase limitation'' and inserting ''at or below the simplified acquisition threshold'' at the following locations: 36.502, 36.503, 36.506, 36.508, 36.509, 36.510, 36.512, 36.513(a), 36.521, 36.701(c).

36.511, 36.701, and 36.702 [Amended]

101. Part 36 is amended by removing the phrase ''within the small purchase limitations'' and inserting ''at or below the simplified acquisition threshold'' at the following locations: 36.511, 36.701(b), and 36.702(b)(2).

PART 41—ACQUISITION OF UTILITY SERVICES

102. In 41.201(b), the first sentence is revised to read as follows:

41.201 Policy.

* * * * *

(b) Except for acquisitions at or below the simplified acquisition threshold in part 13, agencies shall acquire utility services by a bilateral written contract, which must include the clauses required by 41.501, regardless of whether rates or terms and conditions of service are fixed or adjusted by a regulatory body. * * *

* * * * *

41.401 [Amended]

103. Section 41.401 is amended in the first sentence by removing ''small purchase'' and inserting ''simplified acquisition'' in its place, and in the second sentence by removing ''beneath the small purchase dollar'' and inserting ''at or below the simplified acquisition'' in its place.

PART 42—CONTRACT ADMINISTRATION

42.903 [Amended]

104. In section 42.903, the phrase ''small purchase limitation in 13.000'' is removed and ''simplified acquisition threshold in part 13'' is inserted in its place.

42.1104 [Amended]

105. In 42.1104(b) the phrase ''Contracts of values less than the small purchase'' is removed and ''Contracts at or below the simplified acquisition threshold'' is inserted in its place.

PART 43—CONTRACT MODIFICATIONS

43.205 [Amended]

106. In section 43.205(d)(2) and (e), the phrase ''applicable small purchase limitation'' is removed and ''simplified acquisition threshold'' is inserted in its place.

PART 44—SUBCONTRACTING POLICIES AND PROCEDURES

44.201–2 and 44.204 [Amended]

107. In sections 44.201–2(b) and 44.204(e), the phrase ''small purchase limitation'' is removed and ''simplified acquisition threshold'' is inserted in its place.

PART 45—GOVERNMENT PROPERTY

108. Section 45.106 is amended by revising paragraph (e) to read as follows:

45.106 Government property clauses.

* * * * *

(e) When the cost of the item to be repaired does not exceed the simplified acquisition threshold in part 13, purchase orders for property repair need not include a Government property clause.

* * * * *

PART 46—QUALITY ASSURANCE

46.202–1 [Amended]

109. In section 46.202–1(a), the phrase ''under small purchases'' is removed and ''at or below the simplified acquisition threshold'' is inserted in its place.

46.301 [Amended]

110. In section 46.301 in the introductory text the phrase ''within the small purchase limitation'' is removed and ''at or below the simplified acquisition threshold'' is inserted in its place.

46.302 [Amended]

111. In the first sentence of section 46.302, the phrase ''small purchase limitation'' is removed and ''simplified acquisition threshold'' is inserted in its place; and in the second sentence, the phrase ''within the small purchase limitation'' is removed and ''at or below the simplified acquisition threshold'' is inserted in its place.

46.304 [Amended]

112. In section 46.304, in the first sentence the phrase ''small purchase limitation'' is removed and ''simplified acquisition threshold'' is inserted in its place, and in the second sentence, the phrase ''within the small purchase limitation'' is removed and ''at or below the simplified acquisition threshold'' is inserted in its place.

46.307 [Amended]

113. In section 46.307(a)(3), the phrase ''small purchase limitation'' is removed and ''simplified acquisition threshold'' is inserted in its place; and in paragraph (b) the phrase ''within the small purchase limitation'' is removed and ''at or below the simplified acquisition threshold'' is inserted in its place.

46.312 [Amended]

114. In the first sentence of section 46.312, the phrase ''small purchase limitation'' is removed and ''simplified acquisition threshold'' is inserted in its place; and in the second sentence the phrase ''within small purchase limitation'' is removed and ''at or below the simplified acquisition threshold'' is inserted in its place.

46.316 [Amended]

115. In section 46.316, the phrase ''small purchase limitation'' is removed and ''simplified acquisition threshold'' is inserted each time it appears.

46.404 Government contract quality assurance for acquisitions at or below the simplified acquisition threshold.

116. Section 46.404 is amended by revising the heading to read as set forth above; by removing the words ''small purchases'' in paragraphs (a) and (b)(1) and inserting ''contracts at or below the simplified acquisition threshold'' in their place.

117. Section 46.805 is amended in the heading of paragraph (a) and introductory text of paragraph (a) by removing ''small purchase limitation in 13.000'' and inserting ''simplified acquisition threshold in part 13''; and by revising paragraph (b) to read as follows:

46.805 Contract clauses.

* * * * *

(b) *Acquisitions at or below the simplified acquisition threshold in part 13.* The clauses prescribed by paragraph (a) of this section are not required for contracts at or below the simplified acquisition threshold in part 13. However, in response to a contractor's specific request, the contracting officer may insert the clauses prescribed in paragraph (a)(1) or (a)(4) of this section in a contract at or below the simplified acquisition threshold in part 13 and may obtain any price reduction that is appropriate.

PART 47—TRANSPORTATION

118. Section 47.104–4(a)(2) is amended by removing the phrase ''small purchases under'' and inserting ''contracts at or below the simplified acquisition threshold in'' in its place; and revising paragraph (b) to read as follows:

47.104–4 Contract clauses.

* * * * *

(b) The contracting officer may insert the clause at 52.247–1, Commercial Bill of Lading Notations, in solicitations and contracts made at or below the simplified acquisition threshold in part 13 when it is contemplated that the delivery terms will be f.o.b. origin.

47.200 [Amended]

119. In 47.200(b)(4), remove the phrase ''Small purchases under'' and insert ''Contracts at or below the simplified acquisition threshold in'' in its place.

47.205 [Amended]

120. In section 47.205(b), remove the phrase ''small purchase limitation under the small purchase procedures in part 13'' and insert ''simplified acquisition threshold at 13.101'' in its place.

47.305–16 [Amended]

121. In the first sentence of 47.305–16(b)(1), remove the phrase ''awarded under the small purchase procedures of'' and insert ''at or below the simplified acquisition threshold in'' in its place.

122. Section 47.405 is amended by revising the last sentence to read as follows:

47.405 Contract clause.

* * * This clause does not apply to contracts awarded using the simplified acquisition procedures in part 13.

123. Section 47.504(d) is revised to read as follows:

47.504 Exceptions.

* * * * *

(d) Contracts awarded using the simplified acquisition procedures in part 13.

PART 49—TERMINATION OF CONTRACTS

49.504 [Amended]

124. In section 49.504 at paragraphs (a) (1), (b) and (c)(1), in the first sentence remove the phrase ''small purchase limitation'' and insert ''simplified acquisition threshold'' in its place; and in the second sentence, remove the phrase ''not expected to exceed the small purchase limitation'' and insert ''at or below the simplified acquisition threshold;'' in its place.

PART 52—SOLICITATION PROVISIONS AND CONTRACT CLAUSES

52.203–6 [Amended]

125. In the clause at 52.203–6, the date of the clause is revised to read (JUL 1995), and at the end of paragraph (c), add the phrase ''which exceed $100,000.''

52.203–7 [Amended]

126. In the clause at 52.203–7, the date of the clause is revised to read (JUL 1995) and at the end of paragraph (c)(5) add the phrase ''which exceed $100,000.''

52.209–6 [Amended]

127. In the clause at 52.209–6, the date of the clause is revised to read (JUL 1995) and in the second sentence of paragraph (a) and in paragraph (b) remove the phrase ''the small purchase limitation at FAR 13.000'' and insert ''$25,000''.

128. Sections 52.213–2 and 52.213–3 are amended by revising the introductory paragraphs and removing the derivation lines following ''(End of clause)'' to read as follows:

52.213–2 Invoices.

As prescribed in 13.507(b), insert the following clause:

* * * * *

52.213–3 Notice to supplier.

As prescribed in 13.507(c), insert the following clause:

* * * * *

52.215–1 [Amended]

129. Section 52.215–1 is amended by revising the clause date to read ''(JUL 1995)''; in paragraph (a) by removing ''small purchase limitation'' and inserting ''simplified acquisition threshold'' in its place; in the first sentence of paragraph (c) by adding the phrase '', exceeding $100,000,'' after the first appearance of ''subcontracts''; and removing the derivation lines after ''(End of clause)''.

52.215–2 [Amended]

130. In the clause in 52.215–2, the date is revised to read ''(JUL 1995)'', and in paragraph (f), ''are over the small purchase limitation'' is removed and ''exceed the simplified acquisition threshold'' is inserted in its place.

131. Section 52.216–1 is amended by revising the introductory paragraph and removing the derivation line following ''(End of clause)'' to read as follows:

52.216–1 Type of contract.

As prescribed in 16.105, complete and insert the following provision:

* * * * *

52.219–4 [Reserved]

132. Section 52.219–4 is removed and reserved.

52.219–5 [Amended]

133. Section 52.219–5 is amended by revising the date of the clause to read ''(JUL 1995)''; and in paragraph (c)(1)(ii) of the clause by removing the phrase ''small purchase limitation'' and inserting ''simplified acquisition threshold'' in its place.

52.219–7 [Amended]

134. Section 52.219–7 is amended by revising the date of the clause to read ''(JUL 1995)''; and in paragraph (c)(2) of the clause by removing the phrase ''small purchase limitation'' and inserting ''simplified acquisition threshold'' in its place.

135. Section 52.220–1 is amended by revising the introductory text to read as follows:

52.220–1 Preference for Labor Surplus Area Concerns.

As prescribed in 20.103(b), insert the following provision:

* * * * *

136. Section 52.220–2 is amended by revising the introductory text; revising the date of the clause to read ''(JUL 1995)''; in paragraph (c)(2) of the clause by removing the parenthetical ''(if it exceeds the appropriate small purchase limitation in part 13 of the Federal Acquisition Regulation)''; and removing the derivation line following ''(End of clause)''. The revised text reads as follows:

52.220–2 Notice of Total Labor Surplus Area Set-Aside.

As prescribed in 20.202, insert the following clause:

* * * * *

52.220–3 [Amended]

137. Section 52.220–3 is amended by revising the date of the clause to read ''(JUL 1995)''; removing paragraph (a) and redesignating paragraphs (b), (c), and (d) as (a), (b), and (c), respectively; in newly designated paragraph (b) by removing the phrase ''paragraph (b) above'' and inserting ''paragraph (a) of this clause'' in its place; and removing the derivation lines following ''(End of clause)''.

52.222–4 [Amended]

138. In the clause at 52.222–4, the date is revised to read ''(JUL 1995)'' and, in the first sentence of paragraph (e), following ''subcontracts'' the first time it appears, add the phrase '', exceeding $100,000,''.

139. Section 52.223–5 is amended in the clause by revising the date and paragraph (b) introductory text to read as follows:

52.223–5 Certification Regarding A Drug-Free Workplace.

* * * * *

Certification Regarding a Drug-Free Workplace (Jul 1995)

* * * * *

(b) By submission of its offer, the offeror (other than an individual) responding to a solicitation that is expected to exceed the simplified acquisition threshold, certifies and agrees, that with respect to all employees of the offeror to be employed under a contract resulting from this solicitation, it will—no later than 30 calendar days after contract award (unless a longer period is agreed to in writing), for contracts of 30 calendar days or more performance duration; or as soon as possible for contracts of less than 30 calendar days performance duration, but in any case, by a date prior to when performance is expected to be completed—

* * * * *

52.227–1 [Amended]

140. In the clause at section 52.227–1, revise the clause date to read ''(JUL 1995)'' and in paragraph (b), remove ''$25,000'' after the word ''exceed'' and insert ''the simplified acquisition threshold'' in its place; remove the phrase ''under or over $25,000'' and insert ''including those at or below the simplified acquisition threshold'' in its place; and remove the derivation line after ''(End of clause)''.

52.227–3 [Amended]

141. In section 52.227–3, Alternate III, revise the clause date to read ''(JUL 1995)'' and remove ''$25,000'' and insert ''the simplified acquisition threshold''.

142. The introductory paragraphs in sections 52.236–2, 52.236–3, 52.236–6, 52.236–8, 52.236–9, 52.236–10, 52.236–11, 52.236–12, 52.236–15, 52.236–21, and 52.243–5 are revised and the derivation lines are removed following ''(End of clause)'' to read as follows:

52.236–2 Differing Site Conditions.

As prescribed in 36.502, insert the following clause:

* * * * *

52.236–3 Site Investigation and Conditions Affecting the Work.

As prescribed in 36.503, insert the following clause:

* * * * *

52.236–6 Superintendence by the Contractor.

As prescribed in 36.506, insert the following clause:

* * * * *

52.236–8 Other Contracts.

As prescribed in 36.508, insert the following clause:

* * * * *

52.236–9 Protection of Existing Vegetation, Structures, Equipment, Utilities, and Improvements.

As prescribed in 36.509, insert the following clause:

* * * * *

52.236–10 Operations and Storage Areas.

As prescribed in 36.510, insert the following clause:

* * * * *

52.236–11 Use and Possession Prior to Completion.

As prescribed in 36.511, insert the following clause:

* * * * *

52.236–12 Cleaning Up.

As prescribed in 36.512, insert the following clause:

* * * * *

52.236–15 Schedules for Construction Contracts.

As prescribed in 36.515, insert the following clause:

* * * * *

52.236–21 Specifications and Drawings for Construction.

As prescribed in 36.521, insert the following clause:

* * * * *

52.243–5 Changes and Changed Conditions.

As prescribed in 43.205(e), insert the following clause:

* * * * *

52.244–2 [Amended]

143. In section 52.244–2, Alternate I, revise the parenthetical date to read ''(JUL 1995)'' and, in paragraph (a)(2), remove the phrase ''small purchase limitation'' and insert ''simplified acquisition threshold'' in its place.

144. Section 52.244–5 is amended by revising the introductory text; removing paragraphs (a) and (b); and removing the derivation lines following ''(End of clause)'' to read as follows:

52.244–5 Competition in Subcontracting.

As prescribed in 44.204(e), insert the following clause:

* * * * *

145. The introductory paragraphs of sections 52.246–1, 52.246–7, 52.246–12, 52.246–16, 52.246–23, 52.246–24, and 52.246–25 are revised and the derivation lines following ''(End of clause)'' are removed to read as follows:

52.246–1 Contractor Inspection Requirements.

As prescribed in 46.301, insert the following clause:

* * * * *

52.246–7 Inspection of Research and Development—Fixed Price.

As prescribed in 46.307(a), insert the following clause:

* * * * *

52.246–12 Inspection of Construction.

As prescribed in 46.312, insert the following clause:

* * * * *

52.246–16 Responsibilities for Supplies.

As prescribed in 46.316, insert the following clause:

* * * * *

52.246–23 Limitation of Liability.

As prescribed in 46.805, insert the following clause:

* * * * *

52.246–24 Limitation of Liability—High-Value Items.

As prescribed in 46.805, insert the following clause:

* * * * *

52.246–25 Limitation of Liability—Services.

As prescribed in 46.805, insert the following clause:

* * * * *

146. Section 52.247–1 is amended by adding introductory text, and removing paragraphs (a) and (b) and the derivation lines following ''(End of clause)'' to read as follows:

52.247–1 Commercial Bill of Lading Notations.

As prescribed in 47.104–4, insert the following clause:

* * * * *

147. Section 52.247–64 is amended by revising the introductory text; in the clause heading, the date is revised to read ''(JUL 1995)''; in paragraph (d), remove the words ''small purchases as described in 48 CFR 13'' and insert ''contracts at or below the simplified acquisition threshold as described in FAR part 13'' in their place; in paragraph (e)(1), remove the words ''Small purchases as defined in 48 CFR 13'' and insert ''Contracts at or below the simplified acquisition threshold as defined in FAR part 13'' in their place; and remove the derivation line after ''(End of clause)''. The revised text reads as follows:

52.247–64 Preference for Privately Owned U.S.-Flag Commercial Vessels.

As prescribed in 47.507(a), insert the following clause:

* * * * *

148. In sections 52.249–8, 52.249–9, and 52.249–10 the introductory paragraphs are revised and the derivation lines following ''(End of clause)'' are removed to read as follows:

52.249–8 Default (Fixed-Price Supply and Service).

As prescribed in 49.504(a)(1), insert the following clause:

* * * * *

52.249–9 Default (Fixed-Price Research and Development).

As prescribed in 49.504(b), insert the following clause:

* * * * *

52.249–10 Default (Fixed-Price Construction).

As prescribed in 49.504(c)(1), insert the following clause:

* * * * *

PART 53—FORMS

149. Section 53.213 is amended by revising the heading, the introductory paragraph, and paragraphs (a), (c), (e) heading, and (e)(1) to read as follows:

53.213 Simplified acquisition procedures (SF's 18, 30, 44, 1165, OF's 347, 348).

The following forms are prescribed as stated below for use in simplified acquisition procedures, orders under existing contracts or agreements, and orders from required sources of supplies and services:

(a) *SF 18 (Rev. 6/95), Request for Quotations.* SF 18 prescribed in 53.215–1(a), shall be used in obtaining price, cost, delivery, and related information from suppliers as specified in 13.107(a).

* * * * *

(c) *SF 44 (Rev. 10/83), Purchase Order Invoice Voucher.* SF 44 is prescribed for use in simplified acquisition procedures, as specified in 13.505–3.

* * * * *

(e) *OF 347 (6/95), Order for Supplies or Services, and OF 348 (10/83), Order for Supplies or Services—Schedule Continuation.* * * *

(1) To accomplish acquisitions under simplified acquisition procedures, as specified in 13.505–1.

* * * * *

150. Section 53.215–1 is amended by revising the introductory paragraph; and in paragraph (a) by revising ''(REV 5/93)'' to read ''(REV 6/95)''. The revised text reads as follows:

53.215–1 Solicitation and receipt of proposals and quotations.

The following forms are prescribed, as stated below, for use in contracting by negotiation (except for construction, architect-engineer services, or acquisitions made using simplified acquisition procedures):

* * * * *

53.236–1 [Amended]

151. Section 53.236–1 is amended in paragraph (e) by removing two references to ''small purchase limitation'' and inserting ''simplified acquisition threshold'' in both places; by adding ''6/95)'' immediately following the first reference to ''OF 347'' in paragraph (f); and removing ''contracts of $10,000 or less'' and inserting ''contracts under the simplified acquisition threshold'' in its place.

152. Section 53.301–18 is revised to read as follows:

53.301–18 SF 18 (REV 6/95), Request for Quotations.

BILLING CODE 6820–EP–M

REQUEST FOR QUOTATION
(THIS IS NOT AN ORDER)

THIS RFQ ☐ IS ☐ IS NOT A SMALL BUSINESS SET-ASIDE

PAGE OF PAGES

1. REQUEST NO.
2. DATE ISSUED
3. REQUISITION/PURCHASE REQUEST NO.
4. CERT. FOR NAT. DEF. UNDER BDSA REG. 2 AND/OR DMS REG. 1 ▶ RATING

5a. ISSUED BY

6. DELIVER BY *(Date)*

5b. FOR INFORMATION CALL *(NO COLLECT CALLS)*

NAME

TELEPHONE NUMBER: AREA CODE / NUMBER

7. DELIVERY ☐ FOB DESTINATION ☐ OTHER *(See Schedule)*

8. TO:

a. NAME
b. COMPANY
c. STREET ADDRESS
d. CITY
e. STATE
f. ZIP CODE

9. DESTINATION

a. NAME OF CONSIGNEE
b. STREET ADDRESS
c. CITY
d. STATE
e. ZIP CODE

10. PLEASE FURNISH QUOTATIONS TO THE ISSUING OFFICE IN BLOCK 5A ON OR BEFORE CLOSE OF BUSINESS *(Date)*

IMPORTANT: This is a request for information, and quotations furnished are not offers. If you are unable to quote, please so indicate on this form and return it to the address in Block 5A. This request does not commit the Government to pay any costs incurred in the preparation of the submission of this quotation or to contract for supplies or services. Supplies are of domestic origin unless otherwise indicated by quoter. Any representations and/or certifications attached to this Request for Quotations must be completed by the quoter.

11. SCHEDULE *(Include applicable Federal, State and local taxes)*

ITEM NO. (a)	SUPPLIES/SERVICES (b)	QUANTITY (c)	UNIT (d)	UNIT PRICE (e)	AMOUNT (f)

12. DISCOUNT FOR PROMPT PAYMENT ▶

a. 10 CALENDAR DAYS (%)	b. 20 CALENDAR DAYS (%)	c. 30 CALENDAR DAYS (%)	d. CALENDAR DAYS NUMBER	PERCENTAGE

NOTE: Additional provisions and representations ☐ are ☐ are not attached.

13. NAME AND ADDRESS OF QUOTER

a. NAME OF QUOTER
b. STREET ADDRESS
c. COUNTY
d. CITY
e. STATE
f. ZIP CODE

14. SIGNATURE OF PERSON AUTHORIZED TO SIGN QUOTATION

15. DATE OF QUOTATION

16. SIGNER

a. NAME *(Type or print)*
b. TELEPHONE: AREA CODE / NUMBER
c. TITLE *(Type or print)*

AUTHORIZED FOR LOCAL REPRODUCTION
Previous edition not usable

STANDARD FORM 18 (Rev. 6-95)
Prescribed by GSA - FAR (48 CFR) 53.215-1(a)

BILLING CODE 6820–EP–C

153. Section 53.302–347 is revised to read as follows:

53.302–347 OF 347 (REV 6/95), Order for Supplies or Services.

BILLING CODE 6820–EP–M

ORDER FOR SUPPLIES OR SERVICES

PAGE OF PAGES

IMPORTANT: Mark all packages and papers with contract and/or order numbers.

1. DATE OF ORDER
2. CONTRACT NO. *If any)*
3. ORDER NO.
4. REQUISITION/REFERENCE NO.
5. ISSUING OFFICE *Address correspondence to)*

6. SHIP TO:
a. NAME OF CONSIGNEE
b. STREET ADDRESS
c. CITY
d. STATE
e. ZIP CODE
f. SHIP VIA

7. TO:
a. NAME OF CONTRACTOR
b. COMPANY NAME
c. STREET ADDRESS
d. STATE
e. ZIP CODE

8. TYPE OF ORDER
☐ a. PURCHASE
REFERENCE YOUR: _____
Please furnish the following on the terms and conditions specified on both sides of this order and one the attached sheet, if any, including delivery as indicated.

☐ b. DELIVERY – Except for billing instructions on the reverse, this delivery order is subject to instructions contained on this side only of this form and is issued subject to the terms and conditions of the above-numbered contract.

9. ACCOUNTING AND APPROPRIATION DATA
10. REQUISITIONING OFFICE

11. BUSINESS CLASSIFICATION (*Check appropriate box(es)*)
☐ a. SMALL ☐ b. OTHER THAN SMALL ☐ c. DISADVANTAGED ☐ d. WOMEN-OWNED

12. F.O.B. POINT
13. PLACE OF
a. INSPECTION
b. ACCEPTANCE
14. GOVERNMENT B/L NO.
15. DELIVER TO F.O.B. POINT ON OR BEFORE *(Date)*
16. DISCOUNT TERMS

17. SCHEDULE *(See reverse for Rejections)*

ITEM NO. (a)	SUPPLIES OR SERVICES (b)	QUANTITY ORDERED (c)	UNIT (d)	UNIT PRICE (e)	AMOUNT (f)	QUANTITY ACCEPTED (g)

SEE BILLING INSTRUCTIONS ON REVERSE

18. SHIPPING POINT
19. GROSS SHIPPING WEIGHT
20. INVOICE NO.
21. MAIL INVOICE TO:
a. NAME
b. STREET ADDRESS *(or P.O. Box)*
c. CITY
d. STATE
e. ZIP CODE

17(h) TOT. *(Cont. pages)*

17(i) GRAND TOTAL

22. UNITED STATES OF AMERICA BY *(Signature)*

23. NAME *(Typed)*
TITLE: CONTRACTING/ORDERING OFFICER

AUTHORIZED FOR LOCAL REPRODUCTION
Previous edition not usable

OPTIONAL FORM 347 (REV. 6/95)
Prescribed by GSA/FAR 48 CFR 53.213(e)

SUPPLEMENTAL INVOICING INFORMATION

If desired, this order (or a copy thereof) may be used by the Contractor as the Contractor's invoice, instead of a separate invoice, provided the following statement, (signed and dated) is on (or attached to) the order: "Payment is requested in the amount of $_____. No other invoice will be submitted." However, if the Contractor wishes to submit an invoice, the following information must be provided; contract number (if any), order number, item number(s), description of supplies or service, sizes, quantities, unit prices, and extended totals. Prepaid shipping costs will be indicated as a separate item on the invoice. Where shipping costs exceed $10 (except for parcel post), the billing must be supported by a bill of lading or receipt. When several orders are invoiced to an ordering activity during the same billing period, consolidated periodic billings are encouraged.

RECEIVING REPORT

Quantity in the "Quantity Accepted" column on the face of this order has been: ☐ inspected, ☐ accepted, ☐ received by me and conforms to contract. Items listed below have been rejected for the reasons indicated.

SHIPMENT NUMBER	PARTIAL		DATE RECEIVED	SIGNATURE OF AUTHORIZED U.S. GOV'T REP.	DATE
	FINAL				
TOTAL CONTAINERS		GROSS WEIGHT	RECEIVED AT	TITLE	

REPORT OF REJECTIONS

ITEM NO.	SUPPLIES OR SERVICES	UNIT	QUANTITY REJECTED	REASON FOR REJECTION

OPTIONAL FORM 347 (REV. 6/95) BACK

[FR Doc. 95–16081 Filed 6–30–95; 8:45 am]
BILLING CODE 6820–EP–C

federal register

Monday
July 3, 1995

Part V

Department of Education

Bilingual Education: Academic Excellence Awards; Inviting Applications for New Awards for Fiscal Year (FY) 1995; Notices

DEPARTMENT OF EDUCATION

[CFDA No.: 84.003G]

Bilingual Education: Academic Excellence Awards Notice Inviting Applications for New Awards for Fiscal Year (FY) 1995

Note to Applicants: This notice is a complete application package. Together with the statute authorizing the program and applicable regulations governing the program, including the Education Department General Administrative Regulations (EDGAR), this notice contains all of the information, application forms, and instructions needed to apply for an award under this program.

Purpose of Program: This program provides assistance to promote the adoption and implementation of bilingual education, special alternative instruction programs, and professional development programs that demonstrate promise of assisting limited English proficient (LEP) children and youth to meet challenging State standards.

Eligible Applicants: Local educational agencies (LEAs), State educational agencies, institutions of higher education, and nonprofit organizations.

Deadline for Transmittal of Applications: July 31, 1995.

Deadline for Intergovernmental Review: September 29, 1995.

Available Funds: $1 million.

Estimated Range of Awards: $125,000–$225,000.

Estimated Average Site of Awards: $175,000.

Estimated Number of Awards: 6.

Note: The Department is not bound by any estimates in this notice.

Project Period: Up to 60 months.

Applicable Regulations:

The Education Department General Administrative Regulations (EDGAR) as follows:

(1) 34 CFR part 74 (Administration of Grants and Agreements with Institutions of Higher Education, Hospitals, and Other Non-profit Organizations).

(2) 34 CFR part 75 (Direct Grant Programs).

(3) 34 CFR part 77 (Definitions that Apply to Department Regulations).

(4) 34 CFR part 79 (Intergovernmental Review of Department of Education Programs and Activities).

(5) 34 CFR part 80 (Uniform Administrative Requirements for Grants and Cooperative Agreements to State and Local Governments).

(6) 34 CFR part 81 (General Education Provisions Act—Enforcement).

(7) 34 CFR part 82 (New Restrictions on Lobbying).

(8) 34 CFR part 85 (Governmentwide Debarment and Suspension (Nonprocurement) and Governmentwide Requirements for Drug-Free Workplace (Grants)).

(9) 34 CFR part 86 (Drug-Free Schools and Campuses).

Description of Program: Funds under this program must be used to enhance the capacity of States and LEAs to provide high quality academic programs for LEP children and youth.

In addition, recipients of funds must coordinate activities assisted under this program with activities carried out by comprehensive regional assistance centers assisted under part A of title XIII of the Elementary and Secondary Education Act of 1965, as amended.

Funding Priority and Selection Criteria: The priority and selection criteria in the notice of funding priority and selection criteria for this program, as published elsewhere in this issue of the **Federal Register,** apply to this competition.

Intergovernmental Review of Federal Programs: This program is subject to the requirements of Executive Order 12372 (Intergovernmental Review of Federal Programs) and the regulations in 34 CFR part 79.

The objective of the Executive Order is to foster an intergovernmental partnership and to strengthen federalism by relying on State and local processes for State and local government coordination and review of proposed Federal financial assistance.

Applicants must contact the appropriate State Single Point of Contact to find out about, and to comply with, the State's process under Executive Order 12372. If you want to know the name and address of any State Single Point of Contact, see the list published in the **Federal Register** on March 13, 1995 (60 FR 16713).

In States that have not established a process or chosen a program for review, State, areawide, regional, and local entities may submit comments directly to the Department.

Any State Process Recommendation and other comments submitted by a State Single Point of Contact and any comments from State, areawide, regional, and local entities must be mailed or hand-delivered by the date indicated in this notice to the following address: The Secretary, E.O. 12372—CFDA# 84.003G, U.S. Department of Education, Room 6213, 600 Independence Avenue SW., Washington, DC 20202–6510.

Proof of mailing will be determined on the same basis as applications (see 34 CFR 75.102). Recommendations or comments may be hand-delivered until 4:30 p.m. (Eastern time) on the date indicated in this notice.

Please note that the above address is not the same address as the one to which the applicant submits its completed application. Do not send applications to the above address.

Instructions for transmittal of applications:

(a) If an applicant wants to apply for a grant, the applicant shall—

(1) Mail the original and two copies of the application on or before the deadline date to: U.S. Department of Education, Application Control Center, Attention: (CFDA# 84.003G), Washington, D.C. 20202–4725 or

(2) Hand deliver the original and two copies of the application by 4:30 p.m. (Eastern time) on or before the deadline date to: U.S. Department of Education, Application Control Center, Attention: (CFDA# 84.003G), Room #3633, Regional Office Building #3, 7th and D Streets SW., Washington, D. C. 20202–4725.

(b) An applicant must show one of the following as proof of mailing:

(1) A legibly dated U.S. Postal Service postmark.

(2) A legible mail receipt with the date of mailing stamped by the U.S. Postal Service.

(3) A dated shipping label, invoice, or receipt from a commercial carrier.

(4) Any other proof of mailing acceptable to the Secretary.

(c) If an application is mailed through the U.S. Postal Service, the Secretary does not accept either of the following as proof mailing;

(1) A private metered postmark.

(2) A mail receipt that is not dated by the U.S. Postal Service.

Notes: (1) The U.S. Postal Service does not uniformly provide a dated postmark. Before relying on this method, an applicant should check with its local post office.

(2) The Application Control Center will mail a Grant Application Receipt Acknowledgement to each applicant. If an applicant fails to receive the notification of application receipt within 15 days from the date of mailing the application, the applicant should call the U.S. Department of Education Application Control Center at (202) 708–9495.

(3) The applicant must indicate on the envelope and in Item 10 of the Application for Federal Assistance (Standard Form 424) the CFDA number and suffix letter of the competition under which the application is being submitted.

Application Instructions and Forms: The appendix to this application is divided into three parts, plus a

statement regarding estimated public reporting burden and various assurances and certifications. These parts and additional materials are organized in the same manner that the submitted application should be organized. The parts and additional materials are as follows:

Part I: Application for Federal Assistance (Standard Form 424 (Rev. 4–88)) and instructions.

Part II: Budget Information—Non-Construction Programs (ED Form No. 524) and instructions.

Part III: Application Narrative.

Additional Materials

a. Estimated Public Reporting Burden.

b. Assurances—Non-Construction Programs (Standard Form 424B) and instructions.

c. Certifications Regarding Lobbying; Debarment, Suspension and Other Responsibility Matters; and Drug-Free Workplace Requirements (ED 80–0013) and instructions.

d. Certification Regarding Debarment, Suspension, Ineligibility and Voluntary Exclusion—Lower Tier Covered Transactions (ED 80–0014, 9/90) and instructions. (NOTE: This form is intended for the use of grantees and should not be transmitted to the Department.)

e. Disclosure of Lobbying Activities (Standard Form LLL) (if applicable) and instructions; and Disclosure of Lobbying Activities Continuation Sheet (Standard Form LLL–A).

All applicants must submit ONE original signed application, including ink signatures on all forms and assurances, and TWO copies of the application. Please mark each application as original or copy. No grant may be awarded unless a complete application has been received.

For Further Information Contact: Mary T. Mahony, U.S. Department of Education, 600 Independence Avenue, SW., Room 5609, Switzer Building, Washington, D.C. 20202–6510. Telephone (202) 205–8728. Individuals who use a telecommunications device for the deaf (TDD) may call the Federal Information Relay Service (FIRS) at 1–800–877–8339 between 8 a.m. and 8 p.m., Eastern time, Monday through Friday.

Information about the Department's funding opportunities, including copies of application notices for discretionary grant competitions, can be viewed on the Department's electronic bulletin board (ED Board), telephone (202) 260–9950; or on the Internet Gopher Server at GOPHER.ED.GOV (under Announcements, Bulletins, and Press Releases). However, the official application notice for a discretionary grant competition is the notice published in the **Federal Register**.

Program Authority: 20 U.S.C. 7453.

Dated: June 27, 1995.

Eugene E. Garcia,

Director, Office of Bilingual Education and Minority Languages Affairs.

BILLING CODE 4000–01–M

OMB Approval No. 0348-0043

APPLICATION FOR FEDERAL ASSISTANCE

1. TYPE OF SUBMISSION: *Application* ☐ Construction ☒ Non-Construction; *Preapplication* ☐ Construction ☐ Non-Construction	2. DATE SUBMITTED	Applicant Identifier
	3. DATE RECEIVED BY STATE	State Application Identifier
	4. DATE RECEIVED BY FEDERAL AGENCY	Federal Identifier

5. APPLICANT INFORMATION

Legal Name:	Organizational Unit:
Address *(give city, county, state, and zip code)*:	Name and telephone number of the person to be contacted on matters involving this application *(give area code)*

6. EMPLOYER IDENTIFICATION NUMBER (EIN): ☐☐ – ☐☐☐☐☐☐☐

7. TYPE OF APPLICANT: *(enter appropriate letter in box)* ☐

A. State
B. County
C. Municipal
D. Township
E. Interstate
F. Intermunicipal
G. Special District
H. Independent School Dist.
I. State Controlled Institution of Higher Learning
J. Private University
K. Indian Tribe
L. Individual
M. Profit Organization
N. Other (Specify): _____

8. TYPE OF APPLICATION:

☒ New ☐ Continuation ☐ Revision

If Revision, enter appropriate letter(s) in box(es): ☐ ☐

A. Increase Award B. Decrease Award C. Increase Duration
D. Decrease Duration Other *(specify)*:

9. NAME OF FEDERAL AGENCY:

U.S. Department of Education

10. CATALOG OF FEDERAL DOMESTIC ASSISTANCE NUMBER: 8 4 . 0 0 3G

TITLE: Academic Excellence Awards Program

11. DESCRIPTIVE TITLE OF APPLICANT'S PROJECT:

12. AREAS AFFECTED BY PROJECT *(cities, counties, states, etc.)*:

13. PROPOSED PROJECT: Start Date	Ending Date	14. CONGRESSIONAL DISTRICTS OF: a. Applicant	b. Project

15. ESTIMATED FUNDING:	
a. Federal	$ .00
b. Applicant	$ .00
c. State	$ .00
d. Local	$ .00
e. Other	$ .00
f. Program Income	$ .00
g. TOTAL	$ .00

16. IS APPLICATION SUBJECT TO REVIEW BY STATE EXECUTIVE ORDER 12372 PROCESS?

a. YES. THIS PREAPPLICATION/APPLICATION WAS MADE AVAILABLE TO THE STATE EXECUTIVE ORDER 12372 PROCESS FOR REVIEW ON:

DATE_____

b NO. ☐ PROGRAM IS NOT COVERED BY E.O. 12372

☐ OR PROGRAM HAS NOT BEEN SELECTED BY STATE FOR REVIEW

17. IS THE APPLICANT DELINQUENT ON ANY FEDERAL DEBT?

☐ Yes If "Yes," attach an explanation. ☐ No

18. TO THE BEST OF MY KNOWLEDGE AND BELIEF, ALL DATA IN THIS APPLICATION/PREAPPLICATION ARE TRUE AND CORRECT, THE DOCUMENT HAS BEEN DULY AUTHORIZED BY THE GOVERNING BODY OF THE APPLICANT AND THE APPLICANT WILL COMPLY WITH THE ATTACHED ASSURANCES IF THE ASSISTANCE IS AWARDED

a. Typed Name of Authorized Representative	b. Title	c. Telephone number
d. Signature of Authorized Representative		e. Date Signed

Previous Editions Not Usable

Standard Form 424 (REV 4-88)
Prescribed by OMB Circular A-102

Authorized for Local Reproduction

INSTRUCTIONS FOR THE SF 424

This is a standard form used by applicants as a required facesheet for preapplications and applications submitted for Federal assistance. It will be used by Federal agencies to obtain applicant certification that States which have established a review and comment procedure in response to Executive Order 12372 and have selected the program to be included in their process, have been given an opportunity to review the applicant's submission.

Item: Entry:

1. Self-explanatory.
2. Date application submitted to Federal agency (or State if applicable) & applicant's control number (if applicable).
3. State use only (if applicable).
4. If this application is to continue or revise an existing award, enter present Federal identifier number. If for a new project, leave blank.
5. Legal name of applicant, name of primary organizational unit which will undertake the assistance activity, complete address of the applicant, and name and telephone number of the person to contact on matters related to this application.
6. Enter Employer Identification Number (EIN) as assigned by the Internal Revenue Service.
7. Enter the appropriate letter in the space provided.
8. Check appropriate box and enter appropriate letter(s) in the space(s) provided:
   - "New" means a new assistance award.
   - "Continuation" means an extension for an additional funding/budget period for a project with a projected completion date.
   - "Revision" means any change in the Federal Government's financial obligation or contingent liability from an existing obligation.
9. Name of Federal agency from which assistance is being requested with this application.
10. Use the Catalog of Federal Domestic Assistance number and title of the program under which assistance is requested.
11. Enter a brief descriptive title of the project. if more than one program is involved, you should append an explanation on a separate sheet. If appropriate (e.g., construction or real property projects), attach a map showing project location. For preapplications, use a separate sheet to provide a summary description of this project.

Item: Entry:

12. List only the largest political entities affected (e.g., State, counties, cities).
13. Self-explanatory.
14. List the applicant's Congressional District and any District(s) affected by the program or project.
15. Amount requested or to be contributed during the first funding/budget period by each contributor. Value of in-kind contributions should be included on appropriate lines as applicable. If the action will result in a dollar change to an existing award, indicate *only* the amount of the change. For decreases, enclose the amounts in parentheses. If both basic and supplemental amounts are included, show breakdown on an attached sheet. For multiple program funding, use totals and show breakdown using same categories as item 15.
16. Applicants should contact the State Single Point of Contact (SPOC) for Federal Executive Order 12372 to determine whether the application is subject to the State intergovernmental review process.
17. This question applies to the applicant organization, not the person who signs as the authorized representative. Categories of debt include delinquent audit disallowances, loans and taxes.
18. To be signed by the authorized representative of the applicant. A copy of the governing body's authorization for you to sign this application as official representative must be on file in the applicant's office. (Certain Federal agencies may require that this authorization be submitted as part of the application.)

U.S. DEPARTMENT OF EDUCATION
BUDGET INFORMATION
NON-CONSTRUCTION PROGRAMS

OMB Control No. 1875-0102

Expiration Date: 9/30/95

Name of Institution/Organization

Applicants requesting funding for only one year should complete the column under "Project Year 1." Applicants requesting funding for multi-year grants should complete all applicable columns. Please read all instructions before completing form.

SECTION A - BUDGET SUMMARY
U.S. DEPARTMENT OF EDUCATION FUNDS

Budget Categories	Project Year 1 (a)	Project Year 2 (b)	Project Year 3 (c)	Project Year 4 (d)	Project Year 5 (e)	Total (f)
1. Personnel						
2. Fringe Benefits						
3. Travel						
4. Equipment						
5. Supplies						
6. Contractual						
7. Construction						
8. Other						
9. Total Direct Costs (lines 1-8)						
10. Indirect Costs						
11. Training Stipends						
12. Total Costs (lines 9-11)						

ED FORM NO. 524

Name of Institution/Organization	Applicants requesting funding for only one year should complete the column under "Project Year 1." Applicants requesting funding for multi-year grants should complete all applicable columns. Please read all instructions before completing form.

SECTION B - BUDGET SUMMARY
NON-FEDERAL FUNDS

Budget Categories	Project Year 1 (a)	Project Year 2 (b)	Project Year 3 (c)	Project Year 4 (d)	Project Year 5 (e)	Total (f)
1. Personnel						
2. Fringe Benefits						
3. Travel						
4. Equipment						
5. Supplies						
6. Contractual						
7. Construction						
8. Other						
9. Total Direct Costs (lines 1-8)						
10. Indirect Costs						
11. Training Stipends						
12. Total Costs (lines 9-11)						

SECTION C - OTHER BUDGET INFORMATION (see instructions)

ED FORM NO. 524

INSTRUCTIONS FOR ED FORM NO. 524

General Instructions

This form is used to apply to individual U.S. Department of Education discretionary grant programs. Unless directed otherwise, provide the same budget information for each year of the multi-year funding request. Pay attention to applicable program specific instructions, if attached.

Section A - Budget Summary
U.S. Department of Education Funds

All applicants must complete Section A and provide a breakdown by the applicable budget categories shown in lines 1-11.

Lines 1-11, columns (a)-(e):
For each project year for which funding is requested, show the total amount requested for each applicable budget category.

Lines 1-11, column (f):
Show the multi-year total for each budget category. If funding is requested for only one project year, leave this column blank.

Line 12, columns (a)-(e):
Show the total budget request for each project year for which funding is requested.

Line 12, column (f):
Show the total amount requested for all project years. If funding is requested for only one year, leave this space blank.

Instructions for ED Form 524 (cont.)

Section B - Budget Summary
Non-Federal Funds

If you are required to provide or volunteer to provide matching funds or other non-Federal resources to the project, these should be shown for each applicable budget category on lines 1-11 of Section B.

Lines 1-11, columns (a)-(e):
For each project year for which matching funds or other contributions are provided, show the total contribution for each applicable budget category.

Lines 1-11, column (f):
Show the multi-year total for each budget category. If non-Federal contributions are provided for only one year, leave this column blank.

Line 12, columns (a)-(e):
Show the total matching or other contribution for each project year.

Line 12, column (f):
Show the total amount to be contributed for all years of the multi-year project. If non-Federal contributions are provided for only one year, leave this space blank.

Section C - Other Budget Information
Pay attention to applicable program specific instructions, if attached.

1. Provide an itemized budget breakdown, by project year, for each budget category listed in Sections A and B.

2. If applicable to this program, enter the type of indirect rate (provisional, predetermined, final or fixed) that will be in effect during the funding period. In addition, enter the estimated amount of the base to which the rate is applied, and the total indirect expense.

3. If applicable to this program, provide the rate and base on which fringe benefits are calculated.

4. Provide other explanations or comments you deem necessary.

INSTRUCTIONS FOR APPLICATION NARRATIVE

Before preparing the Application Narrative an applicant should read carefully the description of the program, the information regarding priorities, and the selection criteria the Secretary uses to evaluate applications.

The narrative should encompass each function or activity for which funds are being requested and should--

1. Begin with an Abstract; that is, a summary of the proposed project;

2. Describe the proposed project in light of each of the selection criteria in the order in which the criteria are listed in the notice of funding priority and selection criteria; and

3. Include any other pertinent information that might assist the Secretary in reviewing the application.

The narrative must be limited to no more than 40 double-spaced, typed pages (on one side only), including appendices. These page limits apply only to the narrative and not to the application forms, assurances, certifications, and attachments to those forms, assurances, and certifications. Applications with narratives that exceed these page limits will not be considered for funding.

ESTIMATED PUBLIC REPORTING BURDEN

The time required to complete this information collection is estimated to average 100 hours per response, including the time to review instructions, search existing data resources, gather and maintain the data needed, and complete and review the information collection. **If you have any questions concerning the accuracy of the time estimate(s) or suggestions for improving this form, please write to:** U.S. Department of Education, Washington, DC 20202-4651. **If you have any comments or concerns regarding the status of your individual submission of this form, write directly to:**

Office of Bilingual Education
and Minority Languages Affairs
U.S. Department of Education
600 Independence Avenue, SW.
Washington, DC 20202-6510

(Information collection approved under OMB control number 1885-0533. Expiration date: 6/98.)

OMB Approval No. 0348-0040

ASSURANCES — NON-CONSTRUCTION PROGRAMS

Note: Certain of these assurances may not be applicable to your project or program. If you have questions, please contact the awarding agency. Further, certain Federal awarding agencies may require applicants to certify to additional assurances. If such is the case, you will be notified.

As the duly authorized representative of the applicant I certify that the applicant:

1. Has the legal authority to apply for Federal assistance, and the institutional, managerial and financial capability (including funds sufficient to pay the non-Federal share of project costs) to ensure proper planning, management and completion of the project described in this application.

2. Will give the awarding agency, the Comptroller General of the United States, and if appropriate, the State, through any authorized representative, access to and the right to examine all records, books, papers, or documents related to the award; and will establish a proper accounting system in accordance with generally accepted accounting standards or agency directives.

3. Will establish safeguards to prohibit employees from using their positions for a purpose that constitutes or presents the appearance of personal or organizational conflict of interest, or personal gain.

4. Will initiate and complete the work within the applicable time frame after receipt of approval of the awarding agency.

5. Will comply with the Intergovernmental Personnel Act of 1970 (42 U.S.C. §§ 4728-4763) relating to prescribed standards for merit systems for programs funded under one of the nineteen statutes or regulations specified in Appendix A of OPM's Standards for a Merit System of Personnel Administration (5 C.F.R. 900, Subpart F).

6. Will comply with all Federal statutes relating to nondiscrimination. These include but are not limited to: (a) Title VI of the Civil Rights Act of 1964 (P.L. 88-352) which prohibits discrimination on the basis of race, color or national origin; (b) Title IX of the Education Amendments of 1972, as amended (20 U.S.C. §§ 1681-1683, and 1685-1686), which prohibits discrimination on the basis of sex; (c) Section 504 of the Rehabilitation Act of 1973, as amended (29 U.S.C. § 794), which prohibits discrimination on the basis of handicaps; (d) the Age Discrimination Act of 1975, as amended (42 U.S.C.§§ 6101-6107), which prohibits discrimination on the basis of age; (e) the Drug Abuse Office and Treatment Act of 1972 (P.L. 92-255), as amended, relating to nondiscrimination on the basis of drug abuse; (f) the Comprehensive Alcohol Abuse and Alcoholism Prevention, Treatment and Rehabilitation Act of 1970 (P.L. 91-616), as amended, relating to nondiscrimination on the basis of alcohol abuse or alcoholism; (g) §§ 523 and 527 of the Public Health Service Act of 1912 (42 U.S.C. 290 dd-3 and 290 ee-3), as amended, relating to confidentiality of alcohol and drug abuse patient records; (h) Title VIII of the Civil Rights Act of 1968 (42 U.S.C. § 3601 et seq.), as amended, relating to nondiscrimination in the sale, rental or financing of housing; (i) any other nondiscrimination provisions in the specific statute(s) under which application for Federal assistance is being made; and (j) the requirements of any other nondiscrimination statute(s) which may apply to the application.

7. Will comply, or has already complied, with the requirements of Titles II and III of the Uniform Relocation Assistance and Real Property Acquisition Policies Act of 1970 (P.L. 91-646) which provide for fair and equitable treatment of persons displaced or whose property is acquired as a result of Federal or federally assisted programs. These requirements apply to all interests in real property acquired for project purposes regardless of Federal participation in purchases.

8. Will comply with the provisions of the Hatch Act (5 U.S.C. §§ 1501-1508 and 7324-7328) which limit the political activities of employees whose principal employment activities are funded in whole or in part with Federal funds.

9. Will comply, as applicable, with the provisions of the Davis-Bacon Act (40 U.S.C. §§ 276a to 276a-7), the Copeland Act (40 U.S.C. § 276c and 18 U.S.C. §§ 874), and the Contract Work Hours and Safety Standards Act (40 U.S.C. §§ 327-333), regarding labor standards for federally assisted construction subagreements.

Standard Form 424B (4-88)
Prescribed by OMB Circular A-102

Authorized for Local Reproduction

10. Will comply, if applicable, with flood insurance purchase requirements of Section 102(a) of the Flood Disaster Protection Act of 1973 (P.L. 93-234) which requires recipients in a special flood hazard area to participate in the program andto purchase flood insurance if the total cost of insurable construction and acquisition is $10,000 or more.

11. Will comply with environmental standards which may be prescribed pursuant to the following: (a) institution of environmental quality control measures under the National Environmental Policy Act of 1969 (P.L. 91-190) and Executive Order (EO) 11514; (b) notification of violating facilities pursuant to EO 11738; (c) protection of wetlands pursuant to EO 11990; (d) evaluation of flood hazards in floodplains in accordance with EO 11988; (e) assurance of project consistency with the approved State management program developed under the Coastal Zone Management Act of 1972 (16 U.S.C. §§ 1451 et seq.); (f) conformity of Federal actions to State (Clear Air) Implementation Plans under Section 176(c) of the Clear Air Act of 1955, as amended (42 U.S.C. § 7401 et seq.); (g) protection of underground sources of drinking water under the Safe Drinking Water Act of 1974, as amended, (P.L. 93-523); and (h) protection of endangered species under the Endangered Species Act of 1973, as amended, (P.L. 93-205).

12. Will comply with the Wild and Scenic Rivers Act of 1968 (16 U.S.C. §§ 1271 et seq.) related to protecting components or potential components of the national wild and scenic rivers system.

13. Will assist the awarding agency in assuring compliance with Section 106 of the National Historic Preservation Act of 1966, as amended (16 U.S.C. 470), EO 11593 (identification and protection of historic properties), and the Archaeological and Historic Preservation Act of 1974 (16 U.S.C. 469a-1 et seq.).

14. Will comply with P.L. 93-348 regarding the protection of human subjects involved in research, development, and related activities supported by this award of assistance.

15. Will comply with the Laboratory Animal Welfare Act of 1966 (P.L. 89-544, as amended, 7 U.S.C. 2131 et seq.) pertaining to the care, handling, and treatment of warm blooded animals held for research, teaching, or other activities supported by this award of assistance.

16. Will comply with the Lead-Based Paint Poisoning Prevention Act (42 U.S.C. §§ 4801 et seq.) which prohibits the use of lead based paint in construction or rehabilitation of residence structures.

17. Will cause to be performed the required financial and compliance audits in accordance with the Single Audit Act of 1984.

18. Will comply with all applicable requirements of all other Federal laws, executive orders, regulations and policies governing this program.

SIGNATURE OF AUTHORIZED CERTIFYING OFFICIAL	TITLE
APPLICANT ORGANIZATION	DATE SUBMITTED

SF 424B (4-88) Back

CERTIFICATIONS REGARDING LOBBYING; DEBARMENT, SUSPENSION AND OTHER RESPONSIBILITY MATTERS; AND DRUG-FREE WORKPLACE REQUIREMENTS

Applicants should refer to the regulations cited below to determine the certification to which they are required to attest. Applicants should also review the instructions for certification included in the regulations before completing this form. Signature of this form provides for compliance with certification requirements under 34 CFR Part 82, "New Restrictions on Lobbying," and 34 CFR Part 85, "Government-wide Debarment and Suspension (Nonprocurement) and Government-wide Requirements for Drug-Free Workplace (Grants)." The certifications shall be treated as a material representation of fact upon which reliance will be placed when the Department of Education determines to award the covered transaction, grant, or cooperative agreement.

1. LOBBYING

As required by Section 1352, Title 31 of the U.S. Code, and implemented at 34 CFR Part 82, for persons entering into a grant or cooperative agreement over $100,000, as defined at 34 CFR Part 82, Sections 82.105 and 82.110, the applicant certifies that:

(a) No Federal appropriated funds have been paid or will be paid, by or on behalf of the undersigned, to any person for influencing or attempting to influence an officer or employee of any agency, a Member of Congress, an officer or employee of Congress, or an employee of a Member of Congress in connection with the making of any Federal grant, the entering into of any cooperative agreement, and the extension, continuation, renewal, amendment, or modification of any Federal grant or cooperative agreement;

(b) If any funds other than Federal appropriated funds have been paid or will be paid to any person for influencing or attempting to influence an officer or employee of any agency, a Member of Congress, an officer or employee of Congress, or an employee of a Member of Congress in connection with this Federal grant or cooperative agreement, the undersigned shall complete and submit Standard Form - LLL, "Disclosure Form to Report Lobbying," in accordance with its instructions;

(c) The undersigned shall require that the language of this certification be included in the award documents for all subawards at all tiers (including subgrants, contracts under grants and cooperative agreements, and subcontracts) and that all subrecipients shall certify and disclose accordingly.

2. DEBARMENT, SUSPENSION, AND OTHER RESPONSIBILITY MATTERS

As required by Executive Order 12549, Debarment and Suspension, and implemented at 34 CFR Part 85, for prospective participants in primary covered transactions, as defined at 34 CFR Part 85, Sections 85.105 and 85.110 --

A. The applicant certifies that it and its principals:

(a) Are not presently debarred, suspended, proposed for debarment, declared ineligible, or voluntarily excluded from covered transactions by any Federal department or agency;

(b) Have not within a three-year period preceding this application been convicted of or had a civil judgment rendered against them for commission of fraud or a criminal offense in connection with obtaining, attempting to obtain, or performing a public (Federal, State, or local) transaction or contract under a public transaction; violation of Federal or State antitrust statutes or commission of embezzlement, theft, forgery, bribery, falsification or destruction of records, making false statements, or receiving stolen property;

(c) Are not presently indicted for or otherwise criminally or civilly charged by a governmental entity (Federal, State, or local) with commission of any of the offenses enumerated in paragraph (1)(b) of this certification; and

(d) Have not within a three-year period preceding this application had one or more public transactions (Federal, State, or local) terminated for cause or default; and

B. Where the applicant is unable to certify to any of the statements in this certification, he or she shall attach an explanation to this application.

3. DRUG-FREE WORKPLACE (GRANTEES OTHER THAN INDIVIDUALS)

As required by the Drug-Free Workplace Act of 1988, and implemented at 34 CFR Part 85, Subpart F, for grantees, as defined at 34 CFR Part 85, Sections 85.605 and 85.610 --

A. The applicant certifies that it will or will continue to provide a drug-free workplace by:

(a) Publishing a statement notifying employees that the unlawful manufacture, distribution, dispensing, possession, or use of a controlled substance is prohibited in the grantee's workplace and specifying the actions that will be taken against employees for violation of such prohibition;

(b) Establishing an on-going drug-free awareness program to inform employees about--

(1) The dangers of drug abuse in the workplace;

(2) The grantee's policy of maintaining a drug-free workplace;

(3) Any available drug counseling, rehabilitation, and employee assistance programs; and

(4) The penalties that may be imposed upon employees for drug abuse violations occurring in the workplace;

(c) Making it a requirement that each employee to be engaged in the performance of the grant be given a copy of the statement required by paragraph (a);

(d) Notifying the employee in the statement required by paragraph (a) that, as a condition of employment under the grant, the employee will--

(1) Abide by the terms of the statement; and

(2) Notify the employer in writing of his or her conviction for a violation of a criminal drug statute occurring in the workplace no later than five calendar days after such conviction;

(e) Notifying the agency, in writing, within 10 calendar days after receiving notice under subparagraph (d)(2) from an employee or otherwise receiving actual notice of such conviction. Employers of convicted employees must provide notice, including position title, to: Director, Grants and Contracts Service, U.S. Department of Education, 400 Maryland Avenue, S.W. (Room 3124, GSA Regional Office

Building No. 3), Washington, DC 20202-4571. Notice shall include the identification number(s) of each affected grant;

(f) Taking one of the following actions, within 30 calendar days of receiving notice under subparagraph (d)(2), with respect to any employee who is so convicted--

(1) Taking appropriate personnel action against such an employee, up to and including termination, consistent with the requirements of the Rehabilitation Act of 1973, as amended; or

(2) Requiring such employee to participate satisfactorily in a drug abuse assistance or rehabilitation program approved for such purposes by a Federal, State, or local health, law enforcement, or other appropriate agency;

(g) Making a good faith effort to continue to maintain a drug-free workplace through implementation of paragraphs (a), (b), (c), (d), (e), and (f).

B. The grantee may insert in the space provided below the site(s) for the performance of work done in connection with the specific grant:

Place of Performance (Street address, city, county, state, zip code)

_____

_____

_____

Check ☐ if there are workplaces on file that are not identified here.

DRUG-FREE WORKPLACE (GRANTEES WHO ARE INDIVIDUALS)

As required by the Drug-Free Workplace Act of 1988, and implemented at 34 CFR Part 85, Subpart F, for grantees, as defined at 34 CFR Part 85, Sections 85.605 and 85.610 --

A. As a condition of the grant, I certify that I will not engage in the unlawful manufacture, distribution, dispensing, possession, or use of a controlled substance in conducting any activity with the grant; and

B. If convicted of a criminal drug offense resulting from a violation occurring during the conduct of any grant activity, I will report the conviction, in writing, within 10 calendar days of the conviction, to: Director, Grants and Contracts Service, U.S. Department of Education, 400 Maryland Avenue, S.W. (Room 3124, GSA Regional Office Building No. 3), Washington, DC 20202-4571. Notice shall include the identification number(s) of each affected grant.

As the duly authorized representative of the applicant, I hereby certify that the applicant will comply with the above certifications.

NAME OF APPLICANT	PR/AWARD NUMBER AND/OR PROJECT NAME
PRINTED NAME AND TITLE OF AUTHORIZED REPRESENTATIVE	
SIGNATURE	DATE

ED 80-0013

Certification Regarding Debarment, Suspension, Ineligibility and Voluntary Exclusion -- Lower Tier Covered Transactions

This certification is required by the Department of Education regulations implementing Executive Order 12549, Debarment and Suspension, 34 CFR Part 85, for all lower tier transactions meeting the threshold and tier requirements stated at Section 85.110.

Instructions for Certification

1. By signing and submitting this proposal, the prospective lower tier participant is providing the certification set out below.

2. The certification in this clause is a material representation of fact upon which reliance was placed when this transaction was entered into. If it is later determined that the prospective lower tier participant knowingly rendered an erroneous certification, in addition to other remedies available to the Federal Government, the department or agency with which this transaction originated may pursue available remedies, including suspension and/or debarment.

3. The prospective lower tier participant shall provide immediate written notice to the person to which this proposal is submitted if at any time the prospective lower tier participant learns that its certification was erroneous when submitted or has become erroneous by reason of changed circumstances.

4. The terms "covered transaction," "debarred," "suspended," "ineligible," "lower tier covered transaction," "participant," "person," "primary covered transaction," "principal," "proposal," and "voluntarily excluded," as used in this clause, have the meanings set out in the Definitions and Coverage sections of rules implementing Executive Order 12549. You may contact the person to which this proposal is submitted for assistance in obtaining a copy of those regulations.

5. The prospective lower tier participant agrees by submitting this proposal that, should the proposed covered transaction be entered into, it shall not knowingly enter into any lower tier covered transaction with a person who is debarred, suspended, declared ineligible, or voluntarily excluded from participation in this covered transaction, unless authorized by the department or agency with which this transaction originated.

6. The prospective lower tier participant further agrees by submitting this proposal that it will include the clause titled "Certification Regarding Debarment, Suspension, Ineligibility, and Voluntary Exclusion--Lower Tier Covered Transactions," without modification, in all lower tier covered transactions and in all solicitations for lower tier covered transactions.

7. A participant in a covered transaction may rely upon a certification of a prospective participant in a lower tier covered transaction that it is not debarred, suspended, ineligible, or voluntarily excluded from the covered transaction, unless it knows that the certification is erroneous. A participant may decide the method and frequency by which it determines the eligibility of its principals. Each participant may, but is not required to, check the Nonprocurement List.

8. Nothing contained in the foregoing shall be construed to require establishment of a system of records in order to render in good faith the certification required by this clause. The knowledge and information of a participant is not required to exceed that which is normally possessed by a prudent person in the ordinary course of business dealings.

9. Except for transactions authorized under paragraph 5 of these instructions, if a participant in a covered transaction knowingly enters into a lower tier covered transaction with a person who is suspended, debarred, ineligible, or voluntarily excluded from participation in this transaction, in addition to other remedies available to the Federal Government, the department or agency with which this transaction originated may pursue available remedies, including suspension and/or debarment.

Certification

(1) The prospective lower tier participant certifies, by submission of this proposal, that neither it nor its principals are presently debarred, suspended, proposed for debarment, declared ineligible, or voluntarily excluded from participation in this transaction by any Federal department or agency.

(2) Where the prospective lower tier participant is unable to certify to any of the statements in this certification, such prospective participant shall attach an explanation to this proposal.

NAME OF APPLICANT	PR/AWARD NUMBER AND/OR PROJECT NAME
PRINTED NAME AND TITLE OF AUTHORIZED REPRESENTATIVE	
SIGNATURE	DATE

ED 80-0014, 9/90 (Replaces GCS-009 (REV. 12/88), which is obsolete)

DISCLOSURE OF LOBBYING ACTIVITIES

Approved by OMB
0348-0046

Complete this form to disclose lobbying activities pursuant to 31 U.S.C. 1352
(See reverse for public burden disclosure.)

1. Type of Federal Action:
☐ a. contract
b. grant
c. cooperative agreement
d. loan
e. loan guarantee
f. loan insurance

2. Status of Federal Action:
☐ a. bid/offer/application
b. initial award
c. post-award

3. Report Type:
☐ a. initial filing
b. material change
For Material Change Only:
year _____ quarter _____
date of last report _____

4. Name and Address of Reporting Entity:
☐ Prime ☐ Subawardee
Tier _____, *if known*:

Congressional District, *if known*:

5. If Reporting Entity in No. 4 is Subawardee, Enter Name and Address of Prime:

Congressional District, *if known*:

6. Federal Department/Agency:

7. Federal Program Name/Description:

CFDA Number, *if applicable*: _____

8. Federal Action Number, *if known*:

9. Award Amount, *if known*:
$

10. a. Name and Address of Lobbying Entity
(if individual, last name, first name, MI):

b. Individuals Performing Services *(including address if different from No. 10a)*
(last name, first name, MI):

(attach Continuation Sheet(s) SF-LLL-A, if necessary)

11. Amount of Payment *(check all that apply)*:
$ _____ ☐ actual ☐ planned

12. Form of Payment *(check all that apply)*:
☐ a. cash
☐ b. in-kind; specify: nature _____
value _____

13. Type of Payment *(check all that apply)*:
☐ a. retainer
☐ b. one-time fee
☐ c. commission
☐ d. contingent fee
☐ e. deferred
☐ f. other; specify: _____

14. Brief Description of Services Performed or to be Performed and Date(s) of Service, including officer(s), employee(s), or Member(s) contacted, for Payment Indicated in Item 11:

(attach Continuation Sheet(s) SF-LLL-A, if necessary)

15. Continuation Sheet(s) SF-LLL-A attached: ☐ Yes ☐ No

16. Information requested through this form is authorized by title 31 U.S.C. section 1352. This disclosure of lobbying activities is a material representation of fact upon which reliance was placed by the tier above when this transaction was made or entered into. This disclosure is required pursuant to 31 U.S.C.1352. This information will be reported to the Congress semi-annually and will be available for public inspection. Any person who fails to file the required disclosure shall be subject to a civil penalty of not less than $10,000 and not more than $100,000 for each such failure.

Signature: _____
Print Name: _____
Title: _____
Telephone No.: _____ Date: _____

Federal Use Only:

Authorized for Local Reproduction
Standard Form - LLL

INSTRUCTIONS FOR COMPLETION OF SF-LLL, DISCLOSURE OF LOBBYING ACTIVITIES

This disclosure form shall be completed by the reporting entity, whether subawardee or prime Federal recipient, at the initiation or receipt of a covered Federal action, or a material change to a previous filing, pursuant to title 31 U.S.C. section 1352. The filing of a form is required for each payment or agreement to make payment to any lobbying entity for influencing or attempting to influence an officer or employee of any agency, a Member of Congress, an officer or employee of Congress, or an employee of a Member of Congress in connection with a covered Federal action. Use the SF-LLL-A Continuation Sheet for additional information if the space on the form is inadequate. Complete all items that apply for both the initial filing and material change report. Refer to the implementing guidance published by the Office of Management and Budget for additional information.

1. Identify the type of covered Federal action for which lobbying activity is and/or has been secured to influence the outcome of a covered Federal action.
2. Identify the status of the covered Federal action.
3. Identify the appropriate classification of this report. If this is a followup report caused by a material change to the information previously reported, enter the year and quarter in which the change occurred. Enter the date of the last previously submitted report by this reporting entity for this covered Federal action.
4. Enter the full name, address, city, state and zip code of the reporting entity. Include Congressional District, if known. Check the appropriate classification of the reporting entity that designates if it is, or expects to be, a prime or subaward recipient. Identify the tier of the subawardee, e.g., the first subawardee of the prime is the 1st tier. Subawards include but are not limited to subcontracts, subgrants and contract awards under grants.
5. If the organization filing the report in item 4 checks "Subawardee", then enter the full name, address, city, state and zip code of the prime Federal recipient. Include Congressional District, if known.
6. Enter the name of the Federal agency making the award or loan commitment. Include at least one organizational level below agency name, if known. For example, Department of Transportation, United States Coast Guard.
7. Enter the Federal program name or description for the covered Federal action (item 1). If known, enter the full Catalog of Federal Domestic Assistance (CFDA) number for grants, cooperative agreements, loans, and loan commitments.
8. Enter the most appropriate Federal identifying number available for the Federal action identified in item 1 (e.g., Request for Proposal (RFP) number; Invitation for Bid (IFB) number; grant announcement number; the contract, grant, or loan award number; the application/proposal control number assigned by the Federal agency). Include prefixes, e.g., "RFP-DE-90-001."
9. For a covered Federal action where there has been an award or loan commitment by the Federal agency, enter the Federal amount of the award/loan commitment for the prime entity identified in item 4 or 5.
10. (a) Enter the full name, address, city, state and zip code of the lobbying entity engaged by the reporting entity identified in item 4 to influence the covered Federal action.

    (b) Enter the full names of the individual(s) performing services, and include full address if different from 10 (a). Enter Last Name, First Name, and Middle Initial (MI).
11. Enter the amount of compensation paid or reasonably expected to be paid by the reporting entity (item 4) to the lobbying entity (item 10). Indicate whether the payment has been made (actual) or will be made (planned). Check all boxes that apply. If this is a material change report, enter the cumulative amount of payment made or planned to be made.
12. Check the appropriate box(es). Check all boxes that apply. If payment is made through an in-kind contribution, specify the nature and value of the in-kind payment.
13. Check the appropriate box(es). Check all boxes that apply. If other, specify nature.
14. Provide a specific and detailed description of the services that the lobbyist has performed, or will be expected to perform, and the date(s) of any services rendered. Include all preparatory and related activity, not just time spent in actual contact with Federal officials. Identify the Federal official(s) or employee(s) contacted or the officer(s), employee(s), or Member(s) of Congress that were contacted.
15. Check whether or not a SF-LLL-A Continuation Sheet(s) is attached.
16. The certifying official shall sign and date the form, print his/her name, title, and telephone number.

Public reporting burden for this collection of information is estimated to average 30 mintues per response, including time for reviewing instructions, searching existing data sources, gathering and maintaining the data needed, and completing and reviewing the collection of information. Send comments regarding the burden estimate or any other aspect of this collection of information, including suggestions for reducing this burden, to the Office of Management and Budget, Paperwork Reduction Project (0348-0046), Washington, D.C. 20503.

DISCLOSURE OF LOBBYING ACTIVITIES
CONTINUATION SHEET

Approved by OMB
0348-0046

Reporting Entity: _____ Page _____ of _____

Authorized for Local Reproduction
Standard Form - LLL-A

[FR Doc. 95–16204 Filed 6–30–95; 8:45 am]
BILLING CODE 4000–01–C

DEPARTMENT OF EDUCATION

Bilingual Education: Academic Excellence Awards

AGENCY: Department of Education.

ACTION: Notice of funding priority and selection criteria for fiscal year (FY) 1995.

SUMMARY: The Secretary establishes the selection criteria for evaluating applications and an absolute funding priority under the Academic Excellence Awards program for FY 1995. The Secretary establishes selection criteria and an absolute funding priority to support those applicants that have implemented high quality education programs and have been nominated by their State education agency (SEA) for a grant.

EFFECTIVE DATES: This notice takes effect on August 2, 1995.

FOR FURTHER INFORMATION CONTACT: MAry T. Mahony, U.S. Department of Education, 600 Independence Avenue SW., Room 5609, Switzer Building, Washington, DC 20202–6510. Telephone: (202) 205–8728. Individuals who use a telecommunications device for the deaf (TDD) may call the Federal Information Relay Service (FIRS) at 1–800–877–8339 between 8 a.m. and 8 p.m., Eastern time, Monday through Friday.

SUPPLEMENTARY INFORMATION: The Academic Excellence Awards program is authorized by Title VII of the Elementary and Secondary Education Act of 1965 as amended by the Improving America's Schools Act of 1994 (Pub. L. 103–382, enacted October 20, 1994) (the Act).

Under section 7133 of the Act, this program promotes the adoption and implementation of bilingual education, special alternative instruction programs, and professional development programs that demonstrate promise of assisting limited English proficient (LEP) children and youth to meet challenging State standards by providing grants to SEAs, local educational agencies, nonprofit organizations, and institutions of higher education. The new law represents a substantial change from previous legislation governing the Academic Excellence Awards program.

The Secretary is establishing an absolute priority for applications that are nominated by an applicant's SEA and that have been implemented already at one or more sites. The Secretary has exempted applications submitted by SEAs from the nomination requirement because the Secretary believes that an application submitted by an SEA is equivalent to an SEA nomination of the application. The Secretary establishes this absolute priority to ensure that the Department funds only exemplary programs that have the support of a reliable entity, i.e., the SEA, that is familiar with the exemplary program. The Secretary requires the applicant to have an existing model site to show that it is feasible to implement the exemplary program.

Section 7133 of the Act provides that the Secretary must establish effectiveness criteria for a peer review of applications for a grant under this program. In accordance with this provision, the Secretary will consider the effectiveness of the exemplary program, the exemplary program's potential for adoption, and the applicant's dissemination plan including sustained training, evaluation plan, and coordination strategies.

The Secretary believes that new selection criteria are necessary to carry out the purposes of the new Academic Excellence Awards program authority. The new criteria offer applicants flexibility to design new dissemination approaches and ensure integration with State and local reform efforts.

Note: This notice does *not* solicit applications. A notice inviting applications under this competition is published elsewhere in this issue of the **Federal Register**.

Priority

Under 34 CFR 75.105(c)(3) and section 7133 of the Act, the Secretary gives an absolute preference to applications that meet the following priority. The Secretary funds under this program only applications that meet this absolute priority:

(a) Applications that are submitted by local educational agencies, nonprofit organizations, and institutions of higher education must be nominated by their SEA. (This requirement does not apply to applications submitted by SEAs.) This nomination must be included with the application and must contain an assurance by the SEA that the applicant's program is exemplary and consistent with the State plan for systemic educational reform; and

(b) All the exemplary programs that are submitted for funding under this program must have been implemented already at one or more model sites. Applications must describe how all the essential elements of the exemplary programs have been implemented at these model sites.

Selection Criteria

(a) In evaluating applications for grants under this competition, the Secretary uses the following criteria.

(b) The maximum score for all of the criteria in this section is 115 points.

(c) The maximum score for each criterion is indicated in parentheses following the heading of each criterion.

(d) The Secretary evaluates each application for a grant under this program by using the following selection criteria, which are based on section 7133 of the Act:

(1) *Evidence of effectiveness.* (25 points) The extent to which the exemplary program provides demonstrated evidence of effectiveness in assisting LEP students to attain high academic standards and challenging State standards.

(2) *Sound research.* (15 points) How well the pedagogical approach and materials of the exemplary program reflect sound research and current professional development practices.

(3) *Potential for adoption.* (20) points The extent to which the exemplary program demonstrates potential for adoption by other education service providers.

(4) *Management plan.* (20 points) How well the proposed management plan will support—

(i) National dissemination of the exemplary program; and

(ii) Sustain training for teachers, other educational personnel, parents, and other members of the school communities where the exemplary program will be adopted.

(5) *Evaluation plan.* (15 points) The extent to which the evaluation plan includes collection of impact data on student learning and documentation of the outcomes of technical assistance at the adoption sites.

(6) *Key personnel.* (10 points) The extent to which key personnel have the experience, training, and skills to implement the project successfully.

(7) *Coordination of activities.* (10 points) The quality of the applicant's plan to coordinate activities with regional, State, and local reform efforts to assist LEP students.

Waiver of Proposed Rulemaking

In accordance with the Administrative Procedure Act (5 U.S.C. 553), it is the practice of the Department of Education to offer interested parties the opportunity to comment on proposed priorities and regulations. However, in order to make timely grant awards in FY 1995, the Director, in accordance with section 437(d)(1) of the General Education Provisions Act, has

decided to issue this final notice of funding priority and selection criteria, which will apply only to the FY 1995 grant competition.

Intergovernmental Review

This program is subject to the requirements of Executive Order 12372 and the regulations in 34 CFR part 79. The objective of the Executive order is to foster an intergovernmental partnership and a strengthened federalism by relying on processes developed by State and local governments for coordination and review of proposed Federal financial assistance.

In accordance with the order, this document is intended to provide early notification of the Department's specific plans and actions for this program.

Program Authority: 20 U.S.C. 7453.

Dated: June 27, 1995.

Eugene E. Garcia,

Director, Office of Bilingual Education and Minority Languages Affairs.

(Catalog of Federal Domestic Assistance Number 84.003G Bilingual Education: Academic Excellence Awards)

[FR Doc. 95–16203 Filed 6–30–95; 8:45 am]

BILLING CODE 4000–01–M

federal register

Monday
July 3, 1995

Part VI

Environmental Protection Agency

Announcement and Publication of Final Policy Toward Owners of Property Containing Contaminated Aquifers and Guidance on Agreements with Prospective Purchasers of Contaminated Property and Model Prospective Purchaser Agreement; Notices

ENVIRONMENTAL PROTECTION AGENCY

[FRL–5251–7]

Announcement and Publication of Final Policy Toward Owners of Property Containing Contaminated Aquifers

SUMMARY: This policy states the agency's position that, subject to certain conditions, where hazardous substances have come to be located on or in a property solely as the result of subsurface migration in an aquifer from a source or sources outside the property, EPA will not take enforcement actions under CERCLA, 42 U.S.C. 106 and 107, against the owner of such property to require the performance of response actions or the payment of response costs.

FURTHER INFORMATION CONTACT: Ellen Kandell, Policy and Program Evaluation Division, Office of Site Remediation Enforcement, 401 M St. S.W., 2273–G, Washington, D.C. 20460. Phone: 703–603–8996, Fax: 703–603–9117

Dated: June 21, 1995.

Bruce M. Diamond,

Director, Office of Site Remediation Enforcement.

POLICY TOWARD OWNERS OF PROPERTY CONTAINING CONTAMINATED AQUIFERS

I. Statement of Policy

Based on the Agency's interpretation of CERCLA, existing EPA guidance, and EPA's Superfund program expertise, it is the Agency's position that where hazardous substances have come to be located on or in a property solely as the result of subsurface migration in an aquifer from a source or sources outside the property, EPA will not take enforcement action against the owner of such property to require the performance of response actions or the payment of response costs.[1] Further, EPA may consider *de minimis* settlements under Section 122(g)(1)(B) of CERCLA where necessary to protect such landowners from contribution suits.

This Policy is subject to the following conditions:

(A) The landowner did not cause, contribute to, or exacerbate the release or threat of release of any hazardous substances, through an act or omission. The failure to take affirmative steps to mitigate or address groundwater contamination, such as conducting groundwater investigations or installing groundwater remediation systems, will not, in the absence of exceptional circumstances, constitute an ''omission'' by the landowner within the meaning of this condition. This policy may not apply where the property contains a groundwater well, the existence or operation of which may affect the migration of contamination in the affected aquifer. These cases will require fact-specific analysis.

(B) The person that caused the release is not an agent or employee of the landowner, and was not in a direct or indirect contractual relationship with the landowner. In cases where the landowner acquired the property, directly or indirectly, from a person that caused the original release, application of this Policy will require an analysis of whether, at the time the property was acquired, the landowner knew or had reason to know of the disposal of hazardous substances that gave rise to the contamination in the aquifer.

(C) There is no alternative basis for the landowner's liability for the contaminated aquifer, such as liability as a generator or transporter under Section 107(a) (3) or (4) of CERCLA, or liability as an owner by reason of the existence of a source of contamination on the landowner's property other than the contamination that migrated in an aquifer from a source outside the property.

In appropriate circumstances, EPA may exercise its discretion under Section 122(g)(1)(B) to consider *de minimis* settlements with a landowner that satisfies the foregoing conditions. Such settlements may be particularly appropriate where such a landowner has been sued or threatened with contribution suits. EPA's Guidance on Landowner Liability and Section 122(g)(1)(B) *De Minimis* Settlements[2] should be consulted in connection with this circumstance.

In exchange for a covenant not to sue from the Agency and statutory contribution protection under Sections 113(f)(2) and 122(g)(5) of CERCLA, EPA may seek consideration from the landowner,[3] such as the landowner's full cooperation (including but not limited to providing access) in evaluating the need for and implementing institutional controls or any other response actions at the site.[4]

The Agency intends to use its Section 104(e) information gathering authority under CERCLA, 42 U.S.C. 9604(e), as appropriate, to verify the presence of the conditions under which the Policy would be applied, unless the source of contamination and lack of culpability of the property owner are otherwise clear.[5] Accordingly, failure by an property owner to provide certified responses to EPA's information requests may, by itself, be grounds for EPA to decline to offer a Section 122(g)(1)(B) *de minimis* settlement.

II. Discussion

A. Background

Nationwide there are numerous sites that are the subject of response actions under CERCLA due to contaminated groundwater. Approximately 85% of the sites on the National Priorities List have some degree of groundwater contamination. Natural subsurface processes, such as infiltration and groundwater flow, often carry contaminants relatively large distances from their sources. Thus, the plume of contaminated groundwater may be relatively long and/or extend over a large area. For this reason, it is sometimes difficult to determine the source or sources of such contamination.

Any person owning property to which contamination has migrated in an aquifer faces potential uncertainty with respect to liability as an ''owner'' under Section 107(a)(1) of CERCLA, 42 U.S.C. 9601(a)(1), even where such owner has had no participation in the handling of hazardous substances, and has taken no action to exacerbate the release.

Some owners of property containing contaminated aquifers have experienced difficulty selling these properties or obtaining financing for development because prospective purchasers and lenders sometimes view the potential for CERCLA liability as a significant risk. The Agency is concerned that such unintended effects are having an adverse impact on property owners and

[1] By this Policy, EPA does not intend to compromise or affect any right it possesses to seek access pursuant to Section 104(e) of CERCLA.

[2] See Guidance on Landowner Liability Under Section 107(a)(1) of CERCLA, De Minimis Settlements under Section 122(g)(1)(B) of CERCLA, and Settlements with Prospective Purchasers of Contaminated Property, OSWER Directive No. 9835.9, June 6, 1989, 54 FR 34235 (August 18, 1989) (hereinafter ''Guidance on Landowner Liability and Section 122(g)(1)(B) De Minimis Settlements'').

[3] A more complete discussion of the appropriate consideration that may be sought under Section 122(g)(1)(B) settlements is contained in Section IV.B.3.a. of Guidance on Landowner Liability and Section 122(g)(1)(B) De Minimis Settlements, *supra* note 2.

[4] The Agency has developed guidance which explains the authorities and procedures by which EPA obtains access or information. See Entry and Continued Access under CERCLA, OSWER Directive #9829.2, June 5, 1987; Guidance on Use and Enforcement of CERCLA Information Requests and Administrative Subpoenas, OSWER Directive 9834.4–A, August 25, 1988.

[5] See Guidance on Landowner Liability and Section 122(g)(1)(B) De Minimis Settlements, *supra* note 2, for an outline of the types of information which should be provided by the landowner to support a request for a *de minimis* settlement.

on the ability of communities to develop or redevelop property.

EPA is issuing this policy to address the concerns raised by owners of property to which contamination has migrated in an aquifer, as well as lenders and prospective purchasers of such property. The intent of this policy is to lower the barriers to transfer of such property by reducing uncertainty regarding the possibility that EPA or third parties may take actions against these landowners.

B. Existing Agency Policy

This policy is related to other guidance that EPA has issued. The Agency has previously published guidance on issues of landowner liability and *de minimis* landowner settlements.[6] Moreover, in other EPA policies, EPA has asserted its enforcement discretion in determining which parties not to pursue.[7]

C. Basis for the Policy

1. The Section 107(b)(3) Defense

Section 107(a)(1) of CERCLA imposes liability on an owner or operator of a ''facility'' from which there is a release or threatened release of a hazardous substance.[8] A ''facility'' is defined under Section 101(9) as including any ''area where a hazardous substance has * * * come to be located.'' The standard of liability imposed under Section 107 is strict, and the government need not prove that an owner contributed to the release in any manner to establish a *prima facie* case.[9] However, Section 107(b)(3) provides an affirmative defense to liability where the release or threat of release was caused solely by ''an act or omission of a third party other than an employee or agent of the defendant, or than one whose act or omission occurs in connection with a contractual relationship existing directly or indirectly with the defendant * * *'' In order to invoke this defense, the defendant must additionally establish, by a preponderance of the evidence, that ''(a) he exercised due care with respect to the hazardous substance concerned taking into consideration the characteristics of such hazardous substance, in light of all relevant facts and circumstances, and (b) he took precautions against foreseeable acts or omissions of any such third party and the consequences that could foreseeably result from such acts or omissions.'' 42 U.S.C. § 9607(b)(3).

a. *Due Care and Precautions.* An owner of property may typically be unable to detect by reasonable means when or whether hazardous substances have come to be located beneath the property due to subsurface migration in an aquifer from a source or sources outside the property. Based on EPA's interpretation of CERCLA, it is the Agency's position that where the release or threat of release was caused solely by an unrelated third party at a location off the landowner's property, the landowner is not required to take any affirmative steps to investigate or prevent the activities that gave rise to the original release in order to satisfy the ''due care'' or ''precautions'' elements of the Section 107(b)(3) defense.

Not only is groundwater contamination difficult to detect, but once identified, it is often difficult to mitigate or address without extensive studies and pump and treat remediation. Based on EPA's technical experience and the Agency's interpretation of CERCLA, EPA has concluded that the failure by such an owner to take affirmative actions, such as conducting groundwater investigations or installing groundwater remediation systems, is not, in the absence of exceptional circumstances, a failure to exercise ''due care'' or ''take precautions'' within the meaning of Section 107(b)(3).

The latter conclusion does not necessarily apply in the case where the property contains a groundwater well and the existence or operation of this well may affect the migration of contamination in the affected aquifer. In such a case, application of the ''due care'' and ''precautions'' tests of Section 107(b)(3) and evaluation of the appropriateness of a *de minimis* settlement under Section 122(g)(1)(B) require a fact-specific analysis of the circumstances, including, but not limited to, the impact of the well and/or the owner's use of it on the spread or containment of the contamination in the aquifer. Accordingly, this Policy does not apply in the case where the property contains a groundwater well, the existence or operation of which may affect the migration of contamination in the affected aquifer. In such a case, however, the landowner may choose to assert a Section 107(b)(3) defense, depending on the case specific facts and circumstances, and EPA may still exercise its discretion to enter into a Section 122(g)(1)(B) *de minimis* settlement.

b. *Contractual Relationship.* The Section 107(b)(3) defense is not available if the act or omission causing the release occurred in connection with a direct or indirect contractual relationship between the defendant and the third party that caused the release. Under Section 101(35)(A) of CERCLA, a ''contractual relationship'' for this purpose includes any land contract, deed, or instrument transferring title to or possession of real property, except in limited specified circumstances. Thus, application of the defense in the circumstances addressed by this Policy requires an examination of whether the landowner acquired the property, directly or indirectly, from a person that caused the original release. An example of this scenario would be where the property at issue was originally part of a larger parcel owned by the person that caused the release. If the larger parcel was subsequently subdivided, and the subdivided property was eventually sold to the current landowner, there may be a direct or indirect ''contractual relationship'' between the person that caused the release and the current landowner.

Even if the landowner acquired the property, directly or indirectly, from a person that caused the original release, this may or may not constitute a ''contractual relationship'' within the meaning of Section 101(35)(A), precluding the availability of the Section 107(b)(3) defense. Land contracts or instruments transferring title are not considered ''contractual relationships'' if the land was acquired after the disposal or placement of the hazardous substances on, in or at the facility under Section 101(35)(A) and the landowner establishes, pursuant to Section 101(35)(A)(i), that, at the time of the acquisition, the landowner ''did not know and had no reason to know that any hazardous substance which is the subject of the release * * * was

[6] See Guidance on Landowner Liability and Section 122(g)(1)(B) De Minimis Settlements, *supra* note 2. This guidance analyzes the language in Sections 107(b)(3) and 122(g)(1)(B) of CERCLA.

[7] See, e.g., Policy Towards Owners of Residential Property at Superfund Sites, OSWER Directive #9834.6, (July 3, 1991) (hereinafter ''Residential Property Owners Policy'') (stating Agency policy not to take enforcement actions against an owner of residential property unless homeowner's activities led to a release); National Priorities List for Uncontrolled Hazardous Waste Sites, 60 FR 20330, 20333 (April 25, 1995). In this notice the Residential Property Owners Policy was applied to ''* * * residential property owners whose property is located above a groundwater plume that is proposed to or on the NPL, where the residential property owner did not contribute to the contamination of the site.'' See also, Interim Policy on CERCLA Settlements Involving Municipalities or Municipal Waste, OSWER Directive No. 9834.13, (December 6, 1989).

[8] EPA has taken the position that lessees may be ''owners'' for purposes of liability. See Guidance on Landowner Liability and Section 122(g)(1)(B) De Minimis Settlements, *supra* note 2, footnote 10.

[9] See, *e.g., U.S.* v. *R.W. Meyer, Inc.,* 889 F.2d 1497, 1507 (6th Cir. 1989)(''CERCLA contemplates strict liability for landowners'').

disposed of on, in, or at the facility.'' [10] Thus, in the subdivision scenario described above, the current landowner might still qualify for the Section 107(b)(3) defense if he or she did not know or have reason to know that the original landowner had disposed of hazardous substances elsewhere on the larger parcel.

2. Settlements Under Section 122(g)(1)(B)

To address concerns that strict liability under Section 107(a)(1) could cause inequitable results with respect to landowners who had not been involved in hazardous substance disposal activities, Congress authorized the Agency to enter into *de minimis* settlements with certain property owners under Section 122(g)(1)(B) of CERCLA, 42 U.S.C. 9622 (g)(1)(B). Under this Section, when the Agency determines that a settlement is ''practicable and in the public interest,'' it ''shall as promptly as possible reach a final settlement'' if the settlement ''involves only a minor portion of the response costs at the facility concerned'' and the Agency determines that the potentially responsible party: ''(i) is an owner of the real property on or in which the facility is located; (ii) did not conduct or permit the generation, transportation, storage, treatment or disposal of any hazardous substance at the facility; and (iii) did not contribute to the release or threat of release * * * through any act or omission.'' [11]

The requirements which must be satisfied in order for the Agency to consider a settlement with landowners under the *de minimis* settlement provisions of Section 122(g)(1)(B) are substantially the same as the elements which must be proved at trial in order for a landowner to establish a third party defense under Section 107(b)(3), as described above.[12]

D. Use of the Policy

This Policy does not constitute rulemaking by the Agency and is not intended and cannot be relied on to create a right or a benefit, substantive or procedural, enforceable at law or in equity, by any person. Furthermore, the Agency may take action at variance with this Policy.

For further information concerning this Policy, please contact Ellen Kandell in the Office of Site Remediation Enforcement at (703) 603–8996.

[FR Doc. 95–16283 Filed 6–30–95; 8:45 am]

BILLING CODE 6560–50–P

[10] Section 101(35)(A) also excludes from the definition of ''contractual relationship'' certain acquisitions of property by government entities and certain acquisitions by inheritance or bequest, so long as the other requirements of Section 101(35)(A) are met. See 42 U.S.C. 101(35)(A) (ii) and (iii).

[11] A detailed discussion of each of these components of Section 122(g)(1)(B) and guidance on structuring settlements under this Section are provided in the Guidance on Landowner Liability and Section 122(g)(1)(B) De Minimis Settlements, *supra* note 2.

[12] *Id.*

ENVIRONMENTAL PROTECTION AGENCY

[FRL–5252–1]

Announcement and Publication of Guidance on Agreements With Prospective Purchasers of Contaminated Property and Model Prospective Purchaser Agreement

SUMMARY: The new prospective purchaser guidance supersedes previous Agency policy on when the Agency will provide a covenant not to sue a prospective purchaser of contaminated property under CERCLA. Previous guidance, issued in June 1989, entitled ''Guidance on Landowner Liability under Section 107(a) of CERCLA, *De Minimis* Settlements under Section 122(g)(1)(B) of CERCLA, and Settlements with Prospective Purchasers of Contaminated Property'' (OSWER Directive No. 9835.9 and 54 FR 34235 (Aug. 18, 1989), had two separate parts, including a model administrative order and a model consent decree for *de minimis* landowner settlements. The first part of the previous guidance, landowner liability/the innocent landowner defense and the Agency's use of *de minimis* landowner settlements including model agreements to use in such settlements remains Agency Policy. The section of the guidance dealing with prospective purchasers is changed by new guidance approved May 24, 1995.

In an effort to promote cleanup for the beneficial reuse and development of contaminated properties, EPA is expanding the criteria by which it will consider entering into prospective purchaser agreements. EPA will consider such agreements if the agreement results in either (1) a substantial direct benefit to the Agency in terms of cleanup or funds for cleanup or (2) a substantial indirect benefit to the community coupled with a lesser direct benefit to the Agency. Additionally, the new guidance should enable the Agency to enter into more prospective purchaser agreements by expanding the universe of eligible sites. A model prospective purchaser agreement has also been developed and is part of the new guidance.

FOR FURTHER INFORMATION CONTACT: Additional information on the prospective purchaser policy is available from Lori Boughton ((703) 603–8959) or Elisabeth Freed ((703) 603–8936) in the Office of Site Remediation Enforcement, 402 M St., S.W., 2273–G, Washington, D.C. 20460. Information regarding the model prospective purchaser agreement and site specific prospective purchaser inquiries should be directed to Helen Keplinger ((202) 260–7116) in the Office of Site Remediation Enforcement, 401 M St. S.W., 2272, Washington, D.C. 20460.

Dated: June 21, 1995.

Bruce M. Diamond,

Director, Office of Site Remediation Enforcement.

Memorandum

Subject: Guidance on Agreements with Prospective Purchasers of Contaminated Property

From: Steven A. Herman, Assistant Administrator, Office of Enforcement and Compliance Assurance

To: Regional Administrators, Regions I–X; Regional Counsel, Region I–X; Waste Management Division Directors, Regions I–X

This memorandum transmits the guidance and model agreement concerning prospective purchasers of contaminated Superfund property. The attached guidance supersedes the Agency policy issued in June 1989, entitled ''Guidance on Landowner Liability under Section 107(a) of CERCLA, *De Minimis* Settlements under Section 122(g)(1)(B) of CERCLA, and Settlements with Prospective Purchasers of Contaminated Property'' (OSWER Directive No. 9835.9 and 54 FR 34235 (Aug. 18, 1989). The 1989 guidance limited the use of these covenants to situations where the Agency planned to take an enforcement action, and where the Agency received a substantial benefit for cleanup of the site by the purchaser, not otherwise available. In an effort to promote cleanup for the beneficial reuse and development of these properties, EPA is expanding the circumstances under which it will consider entering into prospective purchaser agreements.

Additional information on this policy is available from Lori Boughton ((703) 603–8959) or Elisabeth Freed ((703) 603–8936) in the Office of Site Remediation Enforcement. Information regarding the model agreement and site specific inquiries should be directed to Helen Keplinger ((202) 260–7116) in the Office of Site Remediation Enforcement.

GUIDANCE ON SETTLEMENTS WITH PROSPECTIVE PURCHASERS OF CONTAMINATED PROPERTY

I. Purpose

This document supersedes EPA's policy on agreements with prospective purchasers of contaminated property as set forth in the June 6, 1989, policy document entitled ''Guidance on

Landowner Liability under Section 107(a) of CERCLA, *De Minimis* Settlements under Section 122(g)(1)(B) of CERCLA, and Settlements with Prospective Purchasers of Contaminated Property'' [1] (''the 1989 guidance''). This revised guidance reflects both Agency experience in implementing the 1989 guidance and changes to that guidance that EPA believes are needed.

During the past several years, EPA has entered into a number of prospective purchaser agreements to enable purchasers to buy contaminated property for cleanup, redevelopment or reuse. The 1989 guidance required EPA to receive substantial benefits in terms of work or reimbursement of response costs that otherwise would not have been available. While some agreements required performance of cleanup work on contaminated parcels prior to their redevelopment, others provided covenants not to sue for purchase of uncontaminated portions of larger Superfund sites. EPA's experience has demonstrated that prospective purchaser agreements might be both appropriate and beneficial in more circumstances than contemplated by the 1989 guidance. The Agency now believes that it may be appropriate to enter into agreements resulting in somewhat reduced benefits to the Agency through cleanup or response costs or in benefits that also may be available from other parties. These agreements in turn should provide substantial benefits to the community through the creation or retention of jobs, productive use of abandoned property, or revitalization of blighted areas.

While this new guidance restates much of the 1989 guidance, it revises two of the original criteria used to determine whether a prospective purchaser agreement is appropriate. The revised criteria allow the Agency greater flexibility to consider agreements with covenants not to sue to encourage reuse or development of contaminated property that would have substantial benefits to the community (*e.g.,* through job creation or productive use of abandoned property), but also would be safe, consistent with site remediation, and have direct benefits to the Agency. A ''model'' prospective purchaser agreement, which should be used as a starting point for negotiation of agreements, is attached.

II. Statement of Policy

Because of the clear liability which attaches to landowners who acquire property with knowledge of contamination, the Agency has received numerous requests for covenants not to sue from prospective purchasers of contaminated property.[2] It is the Agency's policy not to become involved in private real estate transactions. However, an agreement with a covenant not to sue a prospective purchaser might appropriately be considered if it will have substantial benefits for the government and if the prospective purchaser satisfies other criteria.[3]

The Agency recognizes that entering into an agreement containing a covenant not to sue with a prospective purchaser of contaminated property, given appropriate safeguards, may result in an environmental benefit through a payment for cleanup or a commitment to perform a response action. EPA's experience has shown that prospective purchaser agreements have also benefitted the community where the site is located by encouraging the reuse or redevelopment of property at which the fear of Superfund liability may have been a barrier. The Agency believes that it is necessary to provide greater flexibility in offering covenants not to sue. Through this guidance, the Agency adopts a policy which expands the circumstances under which prospective purchaser agreements may be considered.

III. Criteria for Entering Into Covenants Not To Sue With Prospective Purchasers of Contaminated Property

The following criteria should be met before the Agency considers entering into agreements with prospective purchasers. These criteria are intended to reflect EPA's commitment to removing the barriers imposed by potential CERCLA liability while ensuring protection of human health and the environment. The Agency may also reject any offer if it determines that entering into an agreement with a prospective purchaser is not sufficiently in the public interest to warrant expending the resources necessary to reach an agreement. Regions should consider the following criteria when evaluating prospective purchaser agreements.

1. An EPA Action at the Facility Has Been Taken, Is Ongoing, or Is Anticipated To Be Undertaken by the Agency

This criterion is meant to ensure that EPA does not become unnecessarily involved in purely private real estate transactions or expend its limited resources in negotiations which are unlikely to produce a sufficient benefit to the public. EPA, however, recognizes the potential gains in terms of clean up and public benefit that may be realized with broader application of prospective purchaser agreements. Therefore, this criterion has been expanded beyond the limitation in the 1989 guidance to sites where enforcement action is anticipated, to now include sites where federal involvement has occurred or is expected to occur.

Accordingly, when requested, the Agency may consider entering into prospective purchaser agreements at sites listed or proposed for listing on the National Priorities List (NPL), or sites where EPA has undertaken, is undertaking, or plans to conduct a response action. If the Agency receives a request for a prospective purchaser agreement at a site where EPA has not yet become involved, Regions should first evaluate the realistic possibility that a prospective purchaser may incur Superfund liability when determining the appropriateness of entering into a prospective purchaser agreement. This evaluation should clearly show that EPA's covenant not to sue is essential to remove Superfund liability barriers and allow the private party cleanup and productive use, reuse, or redevelopment of the site.

The Agency should consider the following factors when evaluating the appropriateness of entering into an agreement with a prospective purchaser at any site:

a. Whether information regarding releases or potential releases of hazardous substances at the site indicates that there is a substantial likelihood of federal response or enforcement action at the site that would justify EPA's involvement in entering into the prospective purchaser agreement. EPA should consider information that is available through EPA's data systems, such as the Comprehensive Environmental Response, Compensation, and Liability Information System (''CERCLIS''), a state agency, or through submissions from the prospective purchaser, such as the results of an environmental audit or site assessment.

b. Whether other available avenues (*e.g.,* private indemnification

[1] OSWER Directive No. 9835.9 and 54 FR 34235 (Aug. 18, 1989).

[2] Since settlements with typical prospective purchasers (*i.e.,* those who do not currently own the property, are not otherwise involved with the site, and are, therefore, not yet liable under Section 107) will not be reached under Section 122, the procedures and restrictions in that section, such as those relating to covenants not to sue, will not apply.

[3] This guidance is also applicable to persons seeking prospectively to operate or lease contaminated property. Agreements with prospective lessees/operators will be evaluated using the criteria set forth in this guidance, and will require the current owner's signature.

agreements) may exist to sufficiently alleviate the threat of Superfund liability at the site without the need for EPA involvement. In most cases EPA will decline to consider an agreement at a site that is currently undergoing cleanup through a state program, since future EPA activity at such a site is extremely unlikely.

Prospective purchaser agreements generally will not be appropriate at sites screened out using the above criteria. For example, sites designated by EPA as No Further Response Action Planned (NFRAP) and removed from CERCLIS will rarely be deemed appropriate for a prospective purchaser agreement. Even at such sites, however, EPA may, in extremely unusual circumstances, consider a prospective purchaser agreement if it is in the public interest and the agreement is essential to achieve a very significant public benefit.

2. The Agency Should Receive a Substantial Benefit Either in the Form of a Direct Benefit for Cleanup, or as an Indirect Public Benefit in Combination With a Reduced Direct Benefit to EPA

A cornerstone of the Agency's evaluation process under this policy is the measurement of environmental benefit, in the form of direct funding, or cleanup, or a combination of reduced direct funding or cleanup and an indirect public benefit. The Agency believes that its past practice of limiting prospective purchaser agreements to those situations where substantial benefit was measured only in terms of cost reimbursement or work performed may have decreased the effectiveness of this tool.

This guidance encourages a more balanced evaluation of both the direct and indirect benefits of a prospective purchaser agreement to the government and the public. EPA recognizes that indirect benefits to a community is an important consideration and may justify the commitment of the Agency's resources necessary to negotiate a prospective purchaser agreement, even where there are reduced direct benefits to the Agency in terms of cleanup and cost reimbursement.

Therefore, EPA may continue to consider entering into prospective purchaser agreements where there is a substantial direct benefit to EPA in terms of a commitment to conduct the cleanup or to reimburse EPA's cost of cleanup. Furthermore, Regions may now consider negotiating prospective purchaser agreements that will result in substantial indirect benefits to the community as long as there is still some direct benefit to the Agency. Both direct and indirect benefits should be measurable to enable EPA to evaluate them effectively and to ensure they are substantial. Examples of indirect benefits to the community include measures that serve to reduce substantially the risk posed by the site, creation or retention of jobs, development of abandoned or blighted property, creation of conservation or recreation areas, or provision of community services (such as improved public transportation and infrastructure.) Examples of reduced but measurable benefits to EPA include partial cleanup or compensation.

While this policy is intended to provide greater flexibility in providing prospective purchaser agreements, EPA is not reducing its commitment to environmental protection or environmental justice. The Agency intends to carefully weigh the public interest considerations of creating jobs in the inner city, where older contaminated industrial properties are often located, against the possibility of further environmental degradation of industrial property in mixed industrial/residential areas. EPA is committed to working with purchasers of such property, to the extent possible, to ensure proper cleanup and promote responsible land use.

3. The Continued Operation of the Facility or New Site Development, With the Exercise of Due Care, Will Not Aggravate or Contribute to the Existing Contamination or Interfere With EPA's Response Action

Information which should be considered by the Agency to evaluate the effect of new site development or continued operation of the facility could include site assessment data and the Engineering Evaluation Cost Analysis (EE/CA) or remedial investigation/feasibility study (RI/FS), if available, and all other information relevant to the condition of the facility. If the prospective purchaser intends to continue the operations of an existing facility, the prospective purchaser should submit information sufficient to allow the Agency to determine whether the continued operations are likely to aggravate or contribute to the existing contamination or interfere with the remedy. If the prospective purchaser plans to undertake new operations or development of the property, comprehensive information regarding these plans should be provided to EPA. If the planned activities of the prospective purchaser are likely to aggravate or contribute to the existing contamination or generate new contamination, EPA generally will not enter into an agreement, or will include restrictions in the agreement which prohibit those operations or portions of those operations which are likely to aggravate or contribute to the existing contamination or interfere with the remedy.

The Agency will determine on a case-by-case basis whether the available information is sufficient for purposes of this evaluation. One key factor to be considered is whether the remedial investigation or other site evaluation has been completed and the extent of information which has been generated in that process. EPA may not enter into an agreement if the available information is insufficient for purposes of evaluating the impact of the proposed activities.

4. The Continued Operation or New Development of the Property Will Not Pose Health Risks to the Community and Those Persons Likely To Be Present at the Site

EPA believes it is important to consider the environmental implications of site operations on the surrounding community and to those likely to be present or have access to the site.

5. The Prospective Purchaser Is Financially Viable

A settling party, including a prospective purchaser of contaminated property, should demonstrate that it is financially viable and capable of fulfilling any obligation under the agreement. In appropriate circumstances, EPA may structure payment or work to be performed to avoid or minimize an undue financial burden on the purchaser.

IV. Consideration

As a matter of law, it is necessary for EPA to obtain adequate consideration when entering into a prospective purchaser agreement. In determining what constitutes adequate consideration, Regions should consider a number of factors. Initially, Regions should examine the amount of past and future response costs expected to be incurred at the site, whether there are other potentially responsible parties who can perform the work or reimburse EPA's costs, and whether there is likely to be a shortfall in recovery of costs at the site. Regions should then consider the purchase price to be paid by the prospective purchaser, the market value of the property, the value of any lien on the property under Section 107(1) of CERCLA, whether the purchaser is paying a reduced price due to the condition of the property, and if so, the likely increase in the value of the

property attributable to the cleanup (*e.g.* compare purchase price or market price with the estimated value of the property following completion of the response action). Finally, Regions should consider the size and nature of the prospective purchaser and the proposed use of the site (*e.g.* whether the purchaser is a large commercial or industrial venture, a small business, a non-profit or community-based activity). The analysis of any benefits received by the Agency also should contemplate any projected ''windfall'' profit to the purchaser when the government has unreimbursed response costs, and whether it is appropriate to include in the agreement some provision to recoup such costs. This analysis should be coupled with an examination of any indirect benefit that the Agency may receive (*e.g.*, demolition of structures, implementation of institutional controls) in determining whether a prospective purchaser agreement provides a substantial benefit.

V. Public Participation

In light of EPA's new policy of accepting indirect public benefit as partial consideration, and the fact that the prospective purchaser agreements will provide contribution protection to the purchaser, the surrounding community and other members of the public should be afforded opportunity to comment on the settlement, wherever feasible. Because settlements with prospective purchasers are not expressly governed by CERCLA Section 122, there is no legal requirement for public notice and comment. Whenever practicable, however, Regions should publish notices in the **Federal Register** to ensure adequate notification of the agreement to all interested parties. Notice of a proposed settlement, in the **Federal Register** alone, however, will rarely be sufficient to appropriately involve a community in the process concerning an agreement with a prospective purchaser. Particularly in urban communities and at facilities where environmental justice is an issue, Regions should provide sufficient opportunities for public information dissemination and facilitate public input. Seeking cooperation with state and local government may also facilitate public awareness and involvement. Additionally, Regions should make a case-by-case determination of the need and level of additional measures to ensure meaningful community involvement with respect to the agreement. Because of business considerations some prospective purchaser agreements may be subject to relatively short deadlines. In these circumstances, Regions should allow sufficient time for appropriate approvals and public comment prior to the deadline.

VI. Process

A mandatory consultation with the Director of the Regional Support Division, Office of Site Remediation Enforcement, is required for any agreement entered with a prospective purchaser of contaminated property. Any prospective purchaser agreement can only be entered into with the express concurrence of the Assistant Attorney General. It is important that Regions involve EPA Headquarters and the Department of Justice at an early point in the process, and keep them involved throughout the negotiations. In particular, any draft settlement document should be forwarded to Headquarters and the Department of Justice prior to being sent to a prospective purchaser. When seeking approval for a settlement, it is important to explain the consideration for the covenant not to sue, whether direct or a combination of direct and indirect benefits, how it was determined, and why the Region considers it to be adequate.

This guidance and any internal procedures adopted for its implementation are intended solely as guidance for employees of the U.S. Environmental Protection Agency and creates no substantive rights in any persons. Case specific inquiry should be directed to the Regional Support Division. Additional information on this policy is available from Lori Boughton ((703) 603–8959), Elisabeth Freed ((703) 603–8936) in the Policy and Program Evaluation Division, and Helen Keplinger ((202) 260–7116) in the Regional Support Division.

Region _____

In the matter of: [name] [Docket Number] under the authority of the Comprehensive Environmental Response, Compensation, and Liability Act of 1980, 42 U.S.C. 9601, *et seq.*, as amended. [state law, if appropriate] Agreement and Covenant Not To Sue [Insert Settling Respondent's Name]

I. Introduction

This Agreement and Covenant Not to Sue (''Agreement'') is made and entered into by and between the United States Environmental Protection Agency (''EPA'') [state of _____] and _____ [insert name of Settling Respondent] (collectively the ''Parties'').

EPA enters into this Agreement pursuant to the Comprehensive Environmental Response, Compensation, and Liability Act of 1980, as amended (''CERCLA''), 42 U.S.C. § 9601, *et seq.* [If the state is a party, insert ''The State of _____, enters into this Agreement pursuant to [cite relevant state authority.]'' and make appropriate reference to state with respect to affected provisions, including payment or work to be performed].

[Provide introductory information, consistent with Definitions and Statement of Facts, about the party purchasing the contaminated property including, name (''Settling Respondent''), address, corporate status if applicable and include proposed use of the property by prospective purchaser. Provide name, location and description of Site.]

The Parties agree to undertake all actions required by the terms and conditions of this Agreement. The purpose of this Agreement is to settle and resolve, subject to reservations and limitations contained in Sections VII, VIII, IX, and X [If this Agreement contains a separate section for Settling Respondent's reservations, add section number], the potential liability of the Settling Respondent for the Existing Contamination at the Property which would otherwise result from Settling Respondent becoming the owner of the property.

The Parties agree that the Settling Respondent's entry into this Agreement, and the actions undertaken by the Settling Respondent in accordance with the Agreement, do not constitute an admission of any liability by the Settling Respondent.

The resolution of this potential liability, in exchange for provision by the Settling Respondent to EPA [and the state] of a substantial benefit, is in the public interest.

II. Definitions

Unless otherwise expressly provided herein, terms used in this Agreement which are defined in CERCLA or in regulations promulgated under CERCLA shall have the meaning assigned to them in CERCLA or in such regulations, including any amendments thereto.

1. ''EPA'' shall mean the United States Environmental Protection Agency and any successor departments or agencies of the United States.

2. ''Existing Contamination'' shall mean any hazardous substances, pollutants or contaminants, present or existing on or under the Site as of the effective date of this Agreement.

3. ''Parties'' shall mean EPA, [State of _____], and the Settling Respondent.

4. ''Property'' shall mean that portion of the Site which is described in Exhibit 1 of this Agreement.

5. ''Settling Respondent'' shall mean _____.

6. ''Site'' shall mean the [Superfund] Site, encompassing approximately _____ acres, located at [address or description of location] in [name of city, county, and State], and depicted generally on the map attached as Exhibit 2. The Site shall include the Property, and all areas to which hazardous substances and/or pollutants or contaminants, have come to be located [provide a more specific definition of the Site where possible; may also wish to include within Site description structures, USTs, etc].

7. ''United States'' shall mean the United States of America, its departments, agencies, and instrumentalities.

III. Statement of Facts

8. [Include only those facts relating to the Site that are relevant to the covenant being provided the prospective purchaser. Avoid adding information that relates only to actions or parties that are outside of this Agreement.]

9. The Settling Respondent represents, and for the purposes of this Agreement EPA [and the state] relies on those representations, that Settling Respondent's involvement with the Property and the Site has been limited to the following: [Provide facts of any involvement by Settling Respondent with the Site, for example performing an environmental audit, or if Settling Respondent has had no involvement with the Site so state.].

IV. Payment

10. In consideration of and in exchange for the United States' Covenant Not to Sue in Section VIII herein [and Removal of Lien in Section XXI herein if that is part of the consideration for the agreement], Settling Respondent agrees to pay to EPA the sum of $_____, within _____ days of the effective date of this Agreement. [A separate section should be added if the consideration is work to be performed.] The Settling Respondent shall make all payments required by this Agreement in the form of a certified check or checks made payable to ''EPA Hazardous Substance Superfund,'' referencing the EPA Region, EPA Docket number, and Site/Spill ID#_____ [insert 4-digit no.; first 2 numbers represent Region, second 2 numbers are Region's Site/Spill ID no.], [DOJ case number _____, if applicable] and name and address of Settling Respondent. [insert Regional Superfund Lockbox address where payment should be sent]. Notice of payment shall be sent to those persons listed in Section XV (Notices and Submissions) and to EPA Region _____ Financial Management Officer [insert address].

11. Amounts due and owing pursuant to the terms of this Agreement but not paid in accordance with the terms of this Agreement shall accrue interest at the rate established pursuant to Section 107(a) of CERCLA, 42 U.S.C. 9607(a), compounded on an annual basis.

[_____.] [Work To Be Performed]

[Include this section and other appropriate provisions relating to performance of the work, such as financial assurance, agency approvals, reporting, etc., where work to be performed is the consideration for the Agreement.

_____. Statement of Work attached as Exhibit 3.]

V. Access/Notice to Successors in Interest

12. Commencing upon the date that it acquires title to the Property, Settling Respondent agrees to provide to EPA [and the state] its authorized officers, employees, representatives, and all other persons performing response actions under EPA [or state] oversight, an irrevocable right of access at all reasonable times to the Property and to any other property to which access is required for the implementation of response actions at the Site, to the extent access to such other property is controlled by the Settling Respondent, for the purposes of performing and overseeing response actions at the Site under federal [and state] law. EPA agrees to provide reasonable notice to the Settling Respondent of the timing of response actions to be undertaken at the Property. Notwithstanding any provision of this Agreement, EPA retains all of its authorities and rights, including enforcement authorities related thereto, under CERCLA, the Solid Waste Disposal Act, as amended by the Resource Conservation and Recovery Act, 42 U.S.C. 6901, (''RCRA'') *et seq.*, and any other applicable statute or regulation, including any amendments thereto.

13. Within 30 days after the effective date of this Agreement, the Settling Respondent shall record a certified copy of this Agreement with the Recorder's Office [or Registry of Deeds or other appropriate office], _____ County, State of _____. Thereafter, each deed, title, or other instrument conveying an interest in the Property shall contain a notice stating that the Property is subject to this Agreement. A copy of these documents should be sent to the persons listed in Section XV (Notices and Submissions).

14. The Settling Respondent shall ensure that assignees, successors in interest, lessees, and sublessees, of the Property shall provide the same access and cooperation. The Settling Respondent shall ensure that a copy of this Agreement is provided to any current lessee or sublessee on the Property as of the effective date of this Agreement and shall ensure that any subsequent leases, subleases, assignments or transfers of the Property or an interest in the Property are consistent with this Section, and Section XI (Parties Bound/Transfer of Covenant), of the Agreement [and where appropriate, Section _____ (Work to be Performed)].

VI. Due Care/Cooperation

15. The Settling Respondent shall exercise due care at the Site with respect to the Existing Contamination and shall comply with all applicable local, State, and federal laws and regulations. The Settling Respondent recognizes that the implementation of response actions at the Site may interfere with the Settling Respondent's use of the Property, and may require closure of its operations or a part thereof. The Settling Respondent agrees to cooperate fully with EPA in the implementation of response actions at the Site and further agrees not to interfere with such response actions. EPA agrees, consistent with its responsibilities under applicable law, to use reasonable efforts to minimize any interference with the Settling Respondent's operations by such entry and response. In the event the Settling Respondent becomes aware of any action or occurrence which causes or threatens a release of hazardous substances, pollutants or contaminants at or from the Site that constitutes an emergency situation or may present an immediate threat to public health or welfare or the environment, Settling Respondent shall immediately take all appropriate action to prevent, abate, or minimize such release or threat of release, and shall, in addition to complying with any applicable notification requirements under Section 103 of CERCLA, 42 U.S.C. 9603, or any other law, immediately notify EPA of such release or threatened release.

VII. Certification

16. By entering into this agreement, the Settling Respondent certifies that to the best of its knowledge and belief it has fully and accurately disclosed to EPA [and the state] all information known to Settling Respondent and all information in the possession or control of its officers, directors, employees,

contractors and agents which relates in any way to any Existing Contamination or any past or potential future release of hazardous substances, pollutants or contaminants at or from the Site and to its qualification for this Agreement. The Settling Respondent also certifies that to the best of its knowledge and belief it has not caused or contributed to a release or threat of release of hazardous substances or pollutants or contaminants at the Site. If the United States [and the state] determines that information provided by Settling Respondent is not materially accurate and complete, the Agreement, within the sole discretion of the United States, shall be null and void and the United States [and the state] reserves all rights it [they] may have.

VIII. United States' Covenant Not To Sue [4]

17. Subject to the Reservation of Rights in Section IX of this Agreement, upon payment of the amount specified in Section IV (Payment), of this Agreement [if consideration for Agreement is work to be performed, insert, as appropriate, ''and upon completion of the work specified in Section _____ (Work to Be Performed) to the satisfaction of EPA''], the United States [and the state] covenants not to sue or take any other civil or administrative action against Settling Respondent for any and all civil liability for injunctive relief or reimbursement of response costs pursuant to Sections 106 or 107(a) of CERCLA, 42 U.S.C. 9606 or 9607(a) [and state law cite] with respect to the Existing Contamination.

IX. Reservation of Rights

18. The covenant not to sue set forth in Section VIII above does not pertain to any matters other than those expressly specified in Section VIII (United States' Covenant Not to Sue). The United States [and the State] reserves and the Agreement is without prejudice to all rights against Settling Respondent with respect to all other matters, including but not limited to, the following:

(a) claims based on a failure by Settling Respondent to meet a requirement of this Agreement, including but not limited to Section IV (Payment), Section V (Access/Notice to Successors in Interest), Section VI (Due Care/Cooperation), Section XIV (Payment of Costs, [and, if appropriate, Section _____ (Work to be Performed)];

(b) any liability resulting from past or future releases of hazardous substances, pollutants or contaminants, at or from the Site caused or contributed to by Settling Respondent, its successors, assignees, lessees or sublessees;

(c) any liability resulting from exacerbation by Settling Respondent, its successors, assignees, lessees or sublessees, of Existing Contamination;

(d) any liability resulting from the release or threat of release of hazardous substances, pollutants or contaminants, at the Site after the effective date of this Agreement, not within the definition of Existing Contamination;

(e) criminal liability;

(f) liability for damages for injury to, destruction of, or loss of natural resources, and for the costs of any natural resource damage assessment incurred by federal agencies other than EPA; and

(g) liability for violations of local, State or federal law or regulations.

19. With respect to any claim or cause of action asserted by the United States [or the state], the Settling Respondent shall bear the burden of proving that the claim or cause of action, or any part thereof, is attributable solely to Existing Contamination.

20. Nothing in this Agreement is intended as a release or covenant not to sue for any claim or cause of action, administrative or judicial, civil or criminal, past or future, in law or in equity, which the United States [or the state] may have against any person, firm, corporation or other entity not a party to this Agreement.

21. Nothing in this Agreement is intended to limit the right of EPA [or the state] to undertake future response actions at the Site or to seek to compel parties other than the Settling Respondent to perform or pay for response actions at the Site. Nothing in this Agreement shall in any way restrict or limit the nature or scope of response actions which may be taken or be required by EPA [or the state] in exercising its authority under federal [or state] law. Settling Respondent acknowledges that it is purchasing property where response actions may be required.

X. Settling Respondent's Covenant Not To Sue

22. In consideration of the United States' Covenant Not To Sue in Section VIII of this Agreement, the Settling Respondent hereby covenants not to sue and not to assert any claims or causes of action against the United States [or the state], its authorized officers, employees, or representatives with respect to the Site or this Agreement, including but not limited to, any direct or indirect claims for reimbursement from the Hazardous Substance Superfund established pursuant to the Internal Revenue Code, 26 U.S.C. § 9507, through CERCLA Sections 106(b)(2), 111, 112, 113, or any other provision of law, any claim against the United States, including any department, agency or instrumentality of the United States under CERCLA Sections 107 or 113 related to the Site, or any claims arising out of response activities at the Site, including claims based on EPA's oversight of such activities or approval of plans for such activities.

23. The Settling Respondent reserves, and this Agreement is without prejudice to, actions against the United States based on negligent actions taken directly by the United States, not including oversight or approval of the Settling Respondent's plans or activities, that are brought pursuant to any statute other than CERCLA or RCRA and for which the waiver of sovereign immunity is found in a statute other than CERCLA or RCRA. Nothing herein shall be deemed to constitute preauthorization of a claim within the meaning of Section 111 of CERCLA, 42 U.S.C. 9611, or 40 CFR 300.700(d).

XI. Parties Bound/Transfer of Covenant

24. This Agreement shall apply to and be binding upon the United States, [and the state], and shall apply to and be binding on the Settling Respondent, its officers, directors, employees, and agents. Each signatory of a Party to this Agreement represents that he or she is fully authorized to enter into the terms and conditions of this Agreement and to legally bind such Party.

25. Notwithstanding any other provisions of this Agreement, all of the rights, benefits and obligations conferred upon Settling Respondent under this Agreement may be assigned or transferred to any person with the prior written consent of EPA [and the state] in its sole discretion.

26. The Settling Respondent agrees to pay the reasonable costs incurred by EPA [and the state] to review any subsequent requests for consent to assign or transfer the Property.

27. In the event of an assignment or transfer of the Property or an assignment or transfer of an interest in the Property, the assignor or transferor shall continue to be bound by all the terms and conditions, and subject to all the benefits, of this Agreement except as EPA [the state] and the assignor or transferor agree otherwise and modify

[4] Since the covenant not to sue is from the United States, Regions negotiating these Agreements should advise the Department of Justice of any other federal agency involved with the Site, or which may have a claim under CERCLA with respect to the Site and use best efforts to advise such federal agency of the proposed settlement.

this Agreement, in writing, accordingly. Moreover, prior to or simultaneous with any assignment or transfer of the Property, the assignee or transferee must consent in writing to be bound by the terms of this Agreement including but not limited to the certification requirement in Section VII of this Agreement in order for the Covenant Not to Sue in Section VIII to be available to that party. The Covenant Not To Sue in Section VIII shall not be effective with respect to any assignees or transferees who fail to provide such written consent to EPA [and the state].

XII. Disclaimer

28. This Agreement in no way constitutes a finding by EPA [or the state] as to the risks to human health and the environment which may be posed by contamination at the Property or the Site nor constitutes any representation by EPA [or the state] that the Property or the Site is fit for any particular purpose.

XIII. Document Retention

29. The Settling Respondent agrees to retain and make available to EPA [and the state] all business and operating records, contracts, site studies and investigations, and documents relating to operations at the Property, for at least ten years, following the effective date of this Agreement unless otherwise agreed to in writing by the Parties. At the end of ten years, the Settling Respondent shall notify EPA [and the state] of the location of such documents and shall provide EPA [and the state] with an opportunity to copy any documents at the expense of EPA [or the state]. [Where work is to be performed, consider providing for document retention for ten years or until completion of work to the satisfaction of EPA, whichever is longer.]

XIV. Payment of Costs

30. If the Settling Respondent fails to comply with the terms of this Agreement, including, but not limited to, the provisions of Section IV (Payment), [or Section_____ (Work to be Performed)] of this Agreement, it shall be liable for all litigation and other enforcement costs incurred by the United States [and the state] to enforce this Agreement or otherwise obtain compliance.

XV. Notices and Submissions

31. [Insert names, titles, and addresses of those to whom notices and submissions are due, specifying which submissions are required.]

XVI. Effective Date

32. The effective date of this Agreement shall be the date upon which EPA issues written notice to the Settling Respondent that EPA [and the state] has fully executed the Agreement after review of and response to any public comments received.

XVII. Attorney General Approval

33. The Attorney General of the United States or her designee has issued prior written approval of the settlement embodied in this Agreement.

XVIII. Termination

34. If any Party believes that any or all of the obligations under Section V (Access/Notice to Successors in Interest) are no longer necessary to ensure compliance with the requirements of the Agreement, that Party may request in writing that the other Party agree to terminate the provision(s) establishing such obligations; provided, however, that the provision(s) in question shall continue in force unless and until the party requesting such termination receives written agreement from the other party to terminate such provision(s).

XIX. Contribution Protection

35. With regard to claims for contribution against Settling Respondent, the Parties hereto agree that the Settling Respondent is entitled to protection from contribution actions or claims as provided by CERCLA Section 113(f)(2), 42 U.S.C. 9613(f)(2) for matters addressed in this Agreement. The matters addressed in this Agreement are [all response actions taken or to be taken and response costs incurred or to be incurred by the United States or any other person for the Site with respect to the Existing Contamination].

36. The Settling Respondent agrees that with respect to any suit or claim for contribution brought by it for matters related to this Agreement it will notify the United States [and the state] in writing no later than 60 days prior to the initiation of such suit or claim.

37. The Settling Respondent also agrees that with respect to any suit or claim for contribution brought against it for matters related to this Agreement it will notify in writing the United States [and the state] within 10 days of service of the complaint on them.

XX. Exhibits

38. Exhibit 1 shall mean the description of the Property which is the subject of this Agreement.

39. Exhibit 2 shall mean the map depicting the Site.

[_____. Exhibit 3 shall mean the Statement of Work.]

XXI. Removal of Lien

40. [Use this provision only when appropriate.] Subject to the Reservation of Rights in Section IX of this Agreement, upon payment of the amount specified in Section IV (Payment) [or upon satisfactory completion of work to be performed specified in Section _____ (Work to be Performed)], EPA agrees to remove any lien it may have on the Property under Section 107(l) of CERCLA, 42 U.S.C. 9607(l), as a result of response action conducted by EPA at the Property.

XXII. Public Comment

41. This Agreement shall be subject to a thirty-day public comment period, after which EPA may modify or withdraw its consent to this Agreement if comments received disclose facts or considerations which indicate that this Agreement is inappropriate, improper or inadequate.

It is So Agreed:
United States Environmental Protection Agency
By:

_____
Regional Administrator, Region _____
Date

It is So Agreed:
By:

_____
Name Date

[FR Doc. 95–16282 Filed 6–30–95; 8:45 am]
BILLING CODE 6560–50–P

federal register

Monday
July 3, 1995

Part VII

Department of Education

34 CFR Parts 200, 201, 203, 205, and 212
Helping Disadvantaged Children Meet High Standards; Final Rule

DEPARTMENT OF EDUCATION

34 CFR Parts 200, 201, 203, 205, and 212

RIN 1810–AA73

Title I—Helping Disadvantaged Children Meet High Standards

AGENCY: Department of Education.

ACTION: Final regulations.

SUMMARY: As specifically required by statute, the U.S. Secretary of Education (Secretary) issues a single set of final regulations implementing the programs under Title I of the Elementary and Secondary Education Act of 1965, as amended by the Improving America's Schools Act of 1994. In order to provide maximum flexibility to grantees implementing the programs under Title I, these regulations address only those few provisions for which the Secretary believes rulemaking is absolutely necessary. These regulations replace the regulations currently found at 34 CFR Parts 200, 201, 203, 205 and 212.

EFFECTIVE DATE: These regulations take effect on August 2, 1995.

FOR FURTHER INFORMATION CONTACT: For subparts A and E, Wendy Jo New, Telephone: (202) 260–0982; for subpart B, Patricia McKee, Telephone: (202) 260–0991; for subpart D, Paul Brown, Telephone: (202) 260–0976: Compensatory Education Programs, Office of Elementary and Secondary Education, U.S. Department of Education, 600 Independence Avenue, SW, Portals Building, room 4400, Washington, DC 20202–6132.

For subparts C and E, James English, Office of Migrant Education, Office of Elementary and Secondary Education, U.S. Department of Education, 600 Independence Avenue, SW, Portals Building, room 4100, Washington, DC 20202–6135. Telephone: (202) 260–1394.

Individuals who use a telecommunications device for the deaf (TDD) may call the Federal Information Relay Services (FIRS) at 1–800–877–8339 between 8 a.m. and 8 p.m., Eastern time, Monday through Friday.

SUPPLEMENTARY INFORMATION: The 1994 reauthorization of the Elementary and Secondary Education Act of 1965 (ESEA) revised Federal elementary and secondary education programs extensively to help ensure that all children acquire the knowledge and skills they will need to succeed in the 21st century. Under the reauthorized ESEA, Federal education programs for the first time are designed to work together with, rather than separately from, one another. In addition, rather than operating apart from the broader education that children receive, the ESEA reinforces State and community reform efforts geared to challenging State standards, particularly those initiated or supported by the Goals 2000: Educate America Act. In fact, all of the major ESEA programs are redesigned to support comprehensive State and local reforms of teaching and learning and ensure that all children—whatever their background and whatever school they attend—can reap the benefit of those reforms.

As the largest by far of all ESEA programs, Title I is the centerpiece of the ESEA's efforts to help the neediest schools and students reach the same challenging standards expected of all children. Effective July 1, 1995, the four Title I programs—the basic program in local educational agencies (LEAs) (Part A), the Even Start Family Literacy program (Part B), the Migrant Education program (Part C), and the Neglected, Delinquent, and At-Risk Youth program (Part D)—are designed to work together in support of this common purpose. Moreover, the programs embrace the same fundamental new strategies to help ensure that the intended beneficiaries are not left behind in State and local efforts to promote higher standards. These strategies include: a schoolwide focus on improving teaching and learning, strong program coordination by LEAs, flexibility at the local level combined with clear accountability for results, more focused targeting of resources on the neediest schools, and stronger partnerships between schools and communities to support higher achievement for all children.

On May 1, 1995, the Secretary published a notice of proposed rulemaking (NPRM) for Title I in the Federal Register (60 FR 21400–21419). The preamble to the NPRM included a discussion of the provisions enacted by Congress that were addressed in the NPRM. The preamble also included a summary of the results of the negotiated rulemaking process the Secretary implemented under section 1601(b) of Title I. In developing the proposed regulations, the Secretary considered the comments of persons who responded to the October 28, 1994 **Federal Register** notice requesting advice and recommendations on regulatory issues under Title I (59 FR 54372–74) and also the comments of participants in the negotiated rulemaking process.

Changes From the NPRM and Analysis of Comments and Changes

In response to the Secretary's invitation to comment in the NPRM, 370 letters were received from State and LEA officials, teachers, organizations, Members of Congress, citizens, and students. An analysis of the comments and the Secretary's responses to those comments is published as an appendix to these final regulations.

In these final regulations, the Secretary has considered these comments, balancing the concerns of State and local school officials, parents, and others with the statutory purposes of the program and the needs of the children to be served. The following sections provide a brief summary of the final regulations that differ from the regulations proposed in the NPRM.

State Responsibilities for Assessment (§§ 200.1, 200.4)

The Secretary has revised §§ 200.1 and 200.4 to clarify that a State's set of high-quality yearly assessments must measure performance in at least mathematics and reading/language arts, but need not be focused solely on reading/language arts or mathematics. Rather, as indicated in § 200.4(a)(1), a State may meet this requirement by developing or adopting assessments in other academic subjects as long as those assessments sufficiently measure performance in mathematics and reading/language arts. For example, an assessment in an academic subject such as social studies may sufficiently measure performance in reading/language arts. Particularly at the secondary level, the Secretary believes it may be especially appropriate to measure performance in reading/language arts through assessments in content areas. In addition, the Secretary emphasizes the importance of all children attaining high levels of performance in all core academic subjects. Limiting the focus of Title I accountability in no way is intended to alter the overall responsibility of States, local school districts, and schools for success of all students in the core academic subjects determined by the State. If a State has standards and assessments for all students in subjects beyond mathematics and reading/language arts, the regulations do not preclude a State from including, for accountability purposes, additional subject areas, and the Secretary encourages them to do so.

Schoolwide Program Requirements (§ 200.8)

Section 200.8(c)(3)(ii)(B)(*1*)(*A*) of the proposed regulations would have required a school that combines in its schoolwide program funds received under Part C of Title I, in consultation with parents of migratory children or organizations representing those parents, to first address the identified needs of migratory children that result from the effects of their migratory lifestyle or are needed to permit migratory children to participate effectively in school. The Secretary has revised this section to clarify that both parents and organizations representing those parents may participate in consultation together to clarify that the two parties are not mutually exclusive.

Responsibilities for Providing Services to Children in Private Schools (§ 200.10)

Recognizing that some LEAs identify a public school as eligible for Title I on the basis of student enrollment rather than because it serves an eligible attendance area, the Secretary has amended § 200.10(b) to clarify that if an LEA identifies a public school as eligible on the basis of enrollment, the LEA must, in consultation with private school officials, determine an equitable way to identify eligible private school children.

Payments to LEAs for Capital Expenses (§ 200.16)

Section 200.16(a)(2)(i)(D) makes clear that the salaries of noninstructional technicians who monitor computer-assisted instruction in private schools are administrative costs to be taken off the top of an LEA's allocation. As such, the LEA may fund those technicians from its capital expense funds.

Reservation of Funds by an LEA (§ 200.27)

The Secretary has amended § 200.27 to clarify that capital expenses incurred to implement alternative delivery systems necessary to serve private school students in compliance with *Aguilar* v. *Felton* that are not reimbursed under section 1002(e) of Title I are administrative costs that must be taken off the top of an LEA's Part A allocation.

Allocation of Funds to School Attendance Areas and Schools (§ 200.28)

The Secretary has made several changes in § 200.28. First, the Secretary has added flexibility in paragraph (a)(3) to permit an LEA that ranks its school attendance areas or schools below 75 percent poverty by grade span groupings to determine the percentage of children from low-income families in the LEA as a whole for each grade span grouping.

Second, the Secretary has addressed a significant problem concerning the availability of adequate poverty data on children who reside in participating public school attendance areas but who attend private schools. Paragraph (a)(2)(i) provides that, if the same data are not available for private school children as are available for public school children, an LEA may use comparable data collected through alternative means such as a survey or from existing sources such as Aid to Families with Dependent Children or tuition scholarship programs. Under paragraph (a)(2)(ii), if complete actual poverty data are not available on private school children, an LEA may extrapolate from actual data on a representative sample of private school children the number of poor private school children. If adequate data are not available under paragraph (a)(2)(i) or (ii), the LEA, for the 1995–96 school year only, shall derive the number of private school children from low-income families by applying the poverty percentage of each participating public school attendance area to the number of private school children who reside in that area.

For example, if a participating public school area has 50 percent poverty and 100 children who reside in that area attend private schools, 50 private school children would be deemed to be poor and thus would generate Part A funds. For school years after 1995–96, however, actual poverty data (or a reasonable estimate based on an adequate sample) will be required. Finally, the Secretary has made clear in paragraph (b)(1) that an LEA must calculate 125 percent of the per-pupil amount of funds the LEA receives for a given fiscal year before the LEA reserves any funds under § 200.27.

Migrant Education Program (MEP) Definitions (§ 200.40)

The proposed regulations contained definitions of ''migratory agricultural worker'' and ''migratory fisher'' to require a move to obtain temporary or seasonal agricultural or fishing work ''as a principal means of livelihood.'' This term was proposed to focus MEP services on children who are truly migratory, i.e., children in families with an actual, significant dependency on migratory agricultural or fishing work. In doing so, the new requirement was intended to correct a situation in which persons who move across school district lines to perform temporary or seasonal agricultural or fishing activities for only a short time are considered ''migratory'' under the MEP, even when they do not have a significant economic dependence on the agricultural or fishing activities. Because many commenters appeared to have misunderstood the scope and intent of the ''principal means of livelihood'' language, and the degree of burden that its use would place on State and local program staff and parents of migratory children, the regulations have been revised to more clearly define the term, ''principal means of livelihood,'' for purposes of the MEP and clarify the term's applicability to moves within 15,000 square mile districts.

Use of Program Funds for Unique Program Function Costs (§ 200.41)

The proposed regulations permit an SEA to use MEP funds to carry out other administrative activities, beyond those allowable under § 200.61, that are unique to the MEP ''or that are the same or similar to those performed by LEAs in the State under subpart A.'' In response to comment, the regulations have been revised to clarify that administrative activities ''that are the same or similar to those performed by LEAs in the State under subpart A'' are included under those administrative activities that are unique to the MEP.

Executive Order 12866

These final regulations have been reviewed in accordance with Executive Order 12866. Under the terms of the order, the Secretary has assessed the potential costs and benefits of this regulatory action.

The benefits associated with these final regulations are clear. Because the Secretary has chosen to regulate on very few statutory provisions, SEAs and LEAs have considerable flexibility in implementing the provisions of Title I to meet their particular needs and circumstances. Moreover, the potential costs associated with these final regulations are minimal; they result from specific statutory requirements or have been determined by the Secretary to be necessary for administering the Title I programs effectively and efficiently.

Intergovernmental Review

Grants to SEAs for the MEP and grants to SEAs and LEAs for the Migrant Education Coordination Program are subject to the requirements of Executive Order 12372 and the regulations in 34 CFR Part 79. The objective of the Executive Order is to foster an intergovernmental partnership and a strengthened federalism by relying on processes developed by State and local

governments for coordination and review of proposed Federal financial assistance.

In accordance with this order, this document is intended to provide early notification of the Secretary's specific plans and actions for these programs.

List of Subjects in 34 CFR Part 200

Administrative practice and procedure, Adult education, Children, Coordination, Education, Education of disadvantaged children, Education of individuals with disabilities, Elementary and secondary education, Eligibility, Family, Family-centered education, Grant programs—education, Indians—education, Institutions of higher education, Interstate coordination, Intrastate coordination, Juvenile delinquency, Local educational agencies, Migratory children, Migratory workers, Neglected, Nonprofit private agencies, Private schools, Public agencies, Reporting and recordkeeping requirements, State-administered programs, State educational agencies, Subgrants.

34 CFR Part 201

Education of disadvantaged, Elementary and secondary education, Grant programs—education, Migrant labor, Reporting and recordkeeping requirements.

34 CFR Part 203

Education of disadvantaged, Elementary and secondary education, Grant programs—education, Juvenile delinquency, Reporting and recordkeeping requirements.

34 CFR Part 205

Education of disadvantaged, Elementary and secondary education, Grant programs—education, Migrant labor.

34 CFR Part 212

Adult education, Education of disadvantaged, Elementary and secondary education, Grant programs—education, Indians—education, Infants and children, Migrant labor, Reporting and recordkeeping requirements.

Dated: June 28, 1995.

Richard W. Riley,

Secretary of Education.

(Catalog of Federal Domestic Assistance Numbers: 84.010, Improving Programs Operated by Local Educational Agencies; 84.011, Migrant Education Basic State Formula Grant Program; 84.013, Prevention and Intervention Programs for Children and Youth Who Are Neglected, Delinquent, or At-Risk of Dropping Out; 84.144, Migrant Education Coordination Program; 84.213, Even Start Family Literacy Program)

The Secretary amends Title 34 of the Code of Federal Regulations by removing Parts 201, 203, 205, and 212 and revising Part 200 as follows:

PART 201 [Removed]

1. Part 201 is removed.

PART 203 [Removed]

2. Part 203 is removed.

PART 205 [Removed]

3. Part 205 is removed.

PART 212 [Removed]

4. Part 212 is removed.

5. Part 200 is revised to read as follows:

PART 200—TITLE I—HELPING DISADVANTAGED CHILDREN MEET HIGH STANDARDS

Subpart A—Improving Basic Programs Operated by Local Educational Agencies

Standards, Assessment, and Accountability

Sec.
200.1 Contents of a State plan.
200.2 State responsibilities for developing challenging standards.
200.3 Requirements for adequate progress.
200.4 State responsibilities for assessment.
200.5 Requirements for school improvement.
200.6 Requirements for LEA improvement.
200.7 [Reserved]

Schoolwide Programs

200.8 Schoolwide program requirements.
200.9 [Reserved]

Participation of Eligible Children in Private Schools

200.10 Responsibilities for providing services to children in private schools.
200.11 Factors for determining equitable participation of children in private schools.
200.12 Requirements to ensure that funds do not benefit a private school.
200.13 Requirements concerning property, equipment, and supplies for the benefit of private school children.
200.14 [Reserved]

Capital Expenses

200.15 Payments to SEAs for capital expenses.
200.16 Payments to LEAs for capital expenses.
200.17 Use of LEA payments for capital expenses.
200.18–200.19 [Reserved]

Procedures for the Within-State Allocation of LEA Program Funds

200.20 Allocation of funds to LEAs.
200.21 Determination of the number of children eligible to be counted.
200.22 Allocation of basic grants.
200.23 Allocation of concentration grants.
200.24 Allocation of targeted grants.
200.25 Applicable hold-harmless provisions.
200.26 [Reserved]

Procedures for the Within-District Allocation of LEA Program Funds

200.27 Reservation of funds by an LEA.
200.28 Allocation of funds to school attendance areas and schools.
200.29 [Reserved]

Subpart B—Even Start Family Literacy Programs

200.30 Migrant Education Even Start program definition.
200.31–200.39 [Reserved]

Subpart C—Migrant Education Program

200.40 Program definitions.
200.41 Use of program funds for unique program function costs.
200.42 Responsibilities of SEAs and operating agencies for assessing the effectiveness of the MEP.
200.43 Responsibilities of SEAs and operating agencies for improving services to migratory children.
200.44 Use of MEP funds in schoolwide projects.
200.45 Responsibilities for participation of children in private schools.
200.46–200.49 [Reserved]

Subpart D—Prevention and Intervention Programs for Children and Youth Who Are Neglected, Delinquent, or At-Risk of Dropping Out

200.50 Program definitions.
200.51 SEA counts of eligible children.
200.52–200.59 [Reserved]

Subpart E—General Provisions

200.60 Reservation of funds for State administration and school improvement.
200.61 Use of funds reserved for State administration.
200.62 [Reserved]
200.63 Supplement, not supplant.
200.64 Maintenance of effort.
200.65 Definitions.
200.66–200.69 [Reserved]

Authority: 20 U.S.C. 6301–6514, unless otherwise noted.

Subpart A—Improving Basic Programs Operated by Local Educational Agencies

Standards, Assessment, and Accountability

§ 200.1 Contents of a State plan.

(a)(1) A State that desires to receive a grant under this subpart shall submit to the Secretary a plan that meets the requirements of this section.

(2) A State plan must be—

(i) Developed with broad-based consultation throughout the planning process with local educational agencies (LEAs), teachers, pupil services personnel, other staff, parents, and administrators, including principals;

(ii) Developed with substantial involvement of the Committee of

Practitioners established under section 1603(b) of the Elementary and Secondary Education Act of 1965, as amended (Act), and continue to involve the Committee in monitoring the plan's implementation; and

(iii) Coordinated with other plans developed under the Act, the Goals 2000: Educate America Act, and other acts, as appropriate, consistent with section 14307 of the Act.

(3) In lieu of a State plan under this section, a State may include programs under this part in a consolidated State plan submitted in accordance with section 14302 of the Act.

(b) A State plan must address the following:

(1) *Challenging standards.* The State plan must include—

(i) Evidence that demonstrates that—

(A) The State has developed or adopted challenging content and student performance standards for all students in accordance with § 200.2; and

(B) The State's procedure for setting the student performance levels applies recognized professional and technical knowledge for establishing the student performance levels; or

(ii) The State's strategy and schedule for developing or adopting by the beginning of the 1997–1998 school year—

(A) Challenging content and student performance standards for all students in accordance with § 200.2(b); or

(B) Content and student performance standards for elementary and secondary school children served under this subpart in accordance with § 200.2(c), if the State will not have developed or adopted content and student performance standards for all students by the 1997–1998 school year or does not intend to develop such standards.

(iii) For subjects in which students will be served under this subpart but for which a State has no standards, the State plan must describe the State's strategy for ensuring that those students are taught the same knowledge and skills and held to the same expectations as are all children.

(2) *Assessments.* The State plan must—

(i) Demonstrate that the State has developed or adopted a set of high-quality yearly student assessments, including assessments that measure performance in at least mathematics and reading/language arts, in accordance with § 200.4, that will be used as the primary means of determining the yearly performance of each school and LEA served under this subpart in enabling all children participating under this subpart to meet the State's student performance standards; or

(ii) If a State has not developed or adopted assessments that measure performance in at least mathematics and reading/language arts in accordance with § 200.4—

(A) Describe the State's quality benchmarks, timetables, and reporting schedule for completing the development and field-testing of those assessments by the beginning of the 2000–2001 school year; and

(B) Describe the transitional set of yearly statewide assessments the State will use to assess students' performance in mastering complex skills and challenging subject matter; and

(iii)(A) Identify the languages other than English that are spoken by the student population participating under this subpart; and

(B) Indicate the languages for which yearly student assessments that meet the requirements of this section are not available and are needed and develop a timetable for progress toward the development of these assessments.

(3) *Adequate yearly progress.* The State plan must—

(i) Demonstrate, based on the assessments described under § 200.4, what constitutes adequate yearly progress toward enabling all children to meet the State performance standards of—

(A) Any school served under this subpart; and

(B) Any LEA that receives funds under this subpart; or

(ii) For any year in which a State uses transitional assessments under § 200.4(e), describe how the State will identify schools under § 200.5 and LEAs under § 200.6 in accordance with § 200.3.

(4) *Capacity building.* Each State plan shall describe—

(i) How the State educational agency (SEA) will help each LEA and school affected by the State plan to develop the capacity to comply with each of the requirements of sections 1112(c)(1)(D), 1114(b), and 1115(c) of the Act that is applicable to the LEA and school; and

(ii) Other factors the State deems appropriate, which may include opportunity-to-learn standards or strategies developed under the Goals 2000: Educate America Act, to provide students an opportunity to achieve the knowledge and skills described in the challenging content standards developed or adopted by the State.

(Authority: 20 U.S.C. 6311)

§ 200.2 State responsibilities for developing challenging standards.

(a) *Standards in general.* (1) A State shall develop or adopt challenging content and student performance standards that will be used by the State, its LEAs, and its schools to carry out this subpart.

(2) Standards under this subpart must include—

(i) Challenging content standards in academic subjects that—

(A) Specify what children are expected to know and be able to do;

(B) Contain coherent and rigorous content; and

(C) Encourage the teaching of advanced skills; and

(ii) Challenging student performance standards that—

(A) Are aligned with the State's content standards;

(B) Describe two levels of high performance—proficient and advanced—that determine how well children are mastering the material in the State's content standards; and

(C) Describe a third level of performance—partially proficient—to provide complete information to measure the progress of lower-performing children toward achieving to the proficient and advanced levels of performance.

(b) *Standards for all children.* A State that has developed or adopted content standards and student performance standards for all students under Title III of the Goals 2000: Educate America Act or under another process, or will develop or adopt such standards by the beginning of the 1997–1998 school year, shall use those standards, modified, if necessary, to conform with the requirements in paragraph (a) of this section and § 200.3, to carry out this subpart.

(c) *Standards for children served under this subpart.* (1) If a State will not have developed or adopted content and student performance standards for all students by the beginning of the 1997–1998 school year, or does not intend to develop those standards, the State shall develop content and student performance standards for elementary and secondary school children served under this subpart in subject areas as determined by the State, but including at least mathematics and reading/language arts. These standards must—

(i) Include the same knowledge, skills, and levels of performance expected of all children;

(ii) Meet the requirements in paragraph (a) of this section and § 200.3; and

(iii) Be developed by the beginning of the 1997–1998 school year.

(2) If a State has not developed content and student performance standards in mathematics and reading/language arts for elementary and secondary school children served under this subpart by the beginning of the 1997–1998 school year, the State shall then adopt a set of standards in those subjects such as the standards contained in other State plans the Secretary has approved.

(3) If and when a State develops or adopts standards for all children, the State shall use those standards to carry out this subpart.

(Authority: 20 U.S.C. 6311(b))

§ 200.3 Requirements for adequate progress.

(a) Except as provided in paragraph (c) of this section, each State shall determine, based on the State assessment system described in § 200.1, what constitutes adequate yearly progress of—

(1) Any school served under this subpart toward enabling children to meet the State's student performance standards; and

(2) Any LEA that receives funds under this subpart toward enabling children in schools served under this subpart to meet the State's student performance standards.

(b) Adequate yearly progress must be defined in a manner that—

(1) Results in continuous and substantial yearly improvement of each school and LEA sufficient to achieve the goal of all children served under this subpart, particularly economically disadvantaged and limited-English proficient children, meeting the State's proficient and advanced levels of performance;

(2) Is sufficiently rigorous to achieve that goal within an appropriate timeframe; and

(3) Links progress primarily to performance on the State's assessment system under § 200.4, while permitting progress to be established in part through the use of other measures, such as dropout, retention, and attendance rates.

(c) For any year in which a State uses transitional assessments under § 200.4(e), the State shall devise a procedure for identifying schools under § 200.5 and LEAs under § 200.6 that relies on accurate information about the continuous and substantial yearly academic progress of each school and LEA.

(Authority: 20 U.S.C. 6311(b)(2), (7)(B))

§ 200.4 State responsibilities for assessment.

(a) (1) Each State shall develop or adopt a set of high-quality yearly student assessments, including assessments that measure performance in at least mathematics and reading/language arts, that will be used as the primary means of determining the yearly performance of each school and LEA served under this subpart in enabling all children participating under this subpart to meet the State's student performance standards.

(2) A State may satisfy this requirement if the State has developed or adopted a set of high-quality yearly student assessments in other academic subjects that measure performance in mathematics and reading/language arts.

(b) Assessments under this section must meet the following requirements:

(1) Be the same assessments used to measure the performance of all children, if the State measures the performance of all children.

(2)(i) Be aligned with the State's challenging content and student performance standards; and

(ii) Provide coherent information about student attainment of the State's content and student performance standards.

(3)(i)(A) Be used for purposes for which the assessments are valid and reliable; and

(B) Be consistent with relevant, nationally recognized professional and technical standards for those assessments.

(ii) Assessment measures that do not meet these requirements may be included as one of the multiple measures if the State includes in its State plan sufficient information regarding the State's efforts to validate the measures and to report the results of those validation studies.

(4) Measure the proficiency of students in the academic subjects in which a State has adopted challenging content and student performance standards.

(5) Be administered at some time during—

(i) Grades 3 through 5;

(ii) Grades 6 through 9; and

(iii) Grades 10 through 12.

(6) Involve multiple approaches within an assessment system with up-to-date measures of student performance, including measures that assess complex thinking skills and understanding of challenging content.

(7) Provide for—

(i) Participation in the assessment of all students in the grades being assessed;

(ii) Reasonable adaptations and accommodations for students with diverse learning needs necessary to measure the achievement of those students relative to the State's standards; and

(iii) (A) Inclusion of limited-English proficient students who shall be assessed, to the extent practicable, in the language and form most likely to yield accurate and reliable information on what those students know and can do to determine the students' mastery of skills in subjects other than English.

(B) To meet this requirement, the State—

(*1*) Shall make every effort to use or develop linguistically accessible assessment measures; and

(*2*) May request assistance from the Secretary if those measures are needed.

(8) Include, for determining the progress of the LEA only, students who have attended schools in the LEA for a full academic year, but who have not attended a single school in the LEA for a full academic year.

(9) Provide individual student interpretive and descriptive reports that include—

(i) Individual scores; or

(ii) Other information on the attainment of student performance standards.

(10) Enable results to be disaggregated within each State, LEA, and school by—

(i) Gender;

(ii) Each major racial and ethnic group;

(iii) English proficiency status;

(iv) Migrant status;

(v) Students with disabilities as compared to students without disabilities; and

(vi) Economically disadvantaged students as compared to students who are not economically disadvantaged.

(c) (1) If a State has developed or adopted assessments for all students that measure performance in mathematics and reading/language arts under Title III of the Goals 2000: Educate America Act or under another process, the State shall use those assessments, modified, if necessary, to conform with the requirements in paragraph (b) of this section and § 200.3, to carry out this subpart.

(2) Paragraph (c)(1) of this section does not relieve the State from including students served under this subpart in assessments in any other subjects the State has developed or adopted for all children.

(d) (1) Except as provided in paragraph (d) (2) and (3) of this section, if a State has not developed or adopted assessments that measure performance in at least mathematics and reading/language arts that meet the requirements in paragraph (b) of this section, the State shall—

(i) By the beginning of the 2000–2001 school year, develop those assessments and field-test them for one year; and

(ii) Develop a timetable and benchmarks, including reports of validity studies, for completing the development and field testing of those assessments.

(2) The State may request a one-year extension from the Secretary to test its new assessments if the State submits a strategy to correct problems identified in the field testing of its assessments.

(3) If a State has not developed assessments that measure performance in at least mathematics and reading/language arts that meet the requirements in paragraph (b) of this section by the beginning of the 2000–2001 school year and is denied an extension, the State shall adopt a set of assessments in those subjects such as assessments contained in the plans of other States the Secretary has approved.

(e) (1) While a State is developing assessments under paragraph (d) of this section, the State may propose to use a transitional set of yearly statewide assessments that will—(i) Assess the performance of complex skills and challenging subject matter in at least mathematics and reading/language arts, which may be satisfied through assessments in academic subjects other than mathematics and reading/language arts if those assessments measure performance in mathematics and reading/language arts;

(ii) Be administered at some time during—

(A) Grades 3 through 5;

(B) Grades 6 through 9; and

(C) Grades 10 through 12; and

(iii) Include all children in the grades being assessed.

(2) Transitional assessments do not need to meet the other requirements of this section.

(Authority: 20 U.S.C. 6311(b))

§ 200.5 Requirements for school improvement.

(a) *Local review*. (1)(i) Each LEA receiving funds under this subpart shall review annually the progress of each school served under this subpart to determine whether the school is meeting or making adequate progress toward enabling its students to meet the State's student performance standards described in the State plan.

(ii) An LEA may review a targeted assistance school on the progress of only those students that have been or are served under this subpart.

(2) In conducting its review, an LEA shall—

(i) (A) Use the State assessments or transitional assessments described in the State plan; and

(B) Use any additional measures or indicators described in the LEA's plan; or

(ii) If the State assessments are not conducted in a Title I school, use other appropriate measures or indicators to review the school's progress; and

(iii) (A) Disaggregate the results of the review according to the categories specified in § 200.4(b)(10);

(B) Seek to produce, in schoolwide program schools, statistically sound results for each category through the use of oversampling or other means; and

(C) Report disaggregated data to the public only when those data are statistically sound.

(3) The LEA shall—

(i) Publicize and disseminate to teachers and other staff, parents, students, the community, and administrators, including principals, the results of the annual review of all schools served under this subpart in individual school performance profiles; and

(ii) Provide the results of the annual review to schools served under this subpart so that the schools can continually refine their program of instruction to help all children participating under this subpart meet the State's student performance standards.

(Authority: 20 U.S.C. 6317(a))

(Approved by the Office of Management and Budget under control number 1810–0581)

§ 200.6 Requirements for LEA improvement.

(a) *State review*. (1)(i) Each SEA shall review annually the progress of each LEA served under this subpart to determine whether the schools receiving assistance under this subpart are making adequate progress toward enabling their students to meet the State's student performance standards described in the State plan.

(ii) An SEA may review the progress of the schools served by an LEA only for those students that have been or are being served under this subpart.

(2) In conducting its review, an SEA shall—

(i) Disaggregate the results of the review according to the categories specified in § 200.4(b)(10);

(ii) Consider other indicators, if applicable, in accordance with section 1112(b)(1) of the Act; and

(ii) Report disaggregated data to the public only when those data are statistically sound.

(3) The SEA shall publicize and disseminate to LEAs, teachers, and other staff, parents, students, the community, and administrators, including principals, the results of the State review.

(Authority: 20 U.S.C. 6317(d))

(Approved by the Office of Management and Budget under control number 1810–0581)

§ 200.7 [Reserved]

Schoolwide Programs

§ 200.8 Schoolwide program requirements.

(a) *General*. (1) An eligible school, in consultation with its LEA, may use funds or services under this subpart, in combination with other Federal, State, and local funds it receives, to upgrade the entire educational program in the school to support systemic reform in accordance with the provisions of this section.

(2)(i) Except as provided in paragraph (a)(2)(ii) of this section, a school may not start a new schoolwide program until the SEA provides written information to each LEA that the SEA has established a statewide system of support and improvement.

(ii) If a school desires to start a schoolwide program prior to the establishment of a statewide system of support and improvement, the school shall demonstrate to the LEA that the school has received high-quality technical assistance and support from other providers of assistance.

(b) *Eligibility for a schoolwide program*. A school may operate a schoolwide program if—

(1) The LEA determines that the school serves a participating attendance area or is a participating school under section 1113 of the Act; and

(2)(i) For the initial year of the schoolwide program, the school meets either of the following criteria:

(A) For the 1995–1996 school year—

(*1*) The school serves a school attendance area in which not less than 60 percent of the children are from low-income families; or

(*2*) Not less than 60 percent of the children enrolled in the school are from low-income families.

(B) For the 1996–1997 school year and subsequent years, the percentages of children from low-income families in paragraph (b)(2)(i)(A) may not be less than 50 percent.

(ii) The LEA may choose to determine the percentage of children from low-income families under paragraph (b)(2)(i) based on a measure of poverty that is different from the poverty measure or measures used by the LEA to identify and rank school attendance areas for eligibility and participation under this subpart.

(c) *Availability of other Federal funds.* (1) In addition to funds under this subpart, a school may use in its schoolwide program Federal funds under any program administered by the Secretary, except programs under the Individuals with Disabilities Education Act (IDEA), that is included on the most recent notice published by the Secretary in the **Federal Register**.

(2) For the purposes of this section, the authority to combine funds from other Federal programs also applies to services provided to a school with those funds.

(3) (i) Except as provided in paragraph (c)(3)(ii) of this section, a school that combines funds from any other Federal program administered by the Secretary in a schoolwide program—

(A) Is not required to meet the statutory or regulatory requirements of that program applicable at the school level; but

(B) Shall meet the intent and purposes of that program to ensure that the needs of the intended beneficiaries of that program are addressed.

(ii)(A) An LEA or a school that chooses to use funds from other programs shall not be relieved of statutory and regulatory requirements applicable to those programs relating to—

(*1*) Health and safety;

(*2*) Civil rights;

(*3*) Gender equity;

(*4*) Participation and involvement of parents and students; (5) Private school children, teachers, and other educational personnel;

(*6*) Maintenance of effort;

(*7*) Comparability of services;

(*8*) Use of Federal funds to supplement, not supplant non-Federal funds in accordance with paragraph (f)(1) (iii) and (2) of this section; and

(*9*) Distribution of funds to SEAs and LEAs.

(B) A school operating a schoolwide program shall comply with the following requirements if it combines funds from these programs in its schoolwide program:

(*1*) *Migrant education.* A school that combines in its schoolwide program funds received under Part C of Title I of the Act shall—

(*i*) In consultation with parents of migratory children or organizations representing those parents, or both, first address the identified needs of migratory children that result from the effects of their migratory lifestyle or are needed to permit migratory children to participate effectively in school; and

(*ii*) Document that services to address those needs have been provided.

(*2*) *Indian education.* A school may combine funds received under subpart 1 of Part A of Title IX of the Act in its schoolwide program if the parent committee established by the LEA under section 9114(c)(4) of the Act approves the inclusion of those funds.

(iii) This paragraph does not relieve—

(A) An LEA from complying with all requirements that do not affect the operation of a schoolwide program; or

(B) A non-schoolwide program school from complying with all applicable requirements.

(d) *Components of a schoolwide program.* A schoolwide program must include the following components:

(1) A comprehensive needs assessment involving the parties listed in paragraph (e)(2)(ii) of this section of the entire school that is based on—

(i) Information on the performance of children in relation to the State content standards and the State student performance standards under section 1111(b)(1) of the Act; or

(ii) Until the State develops or adopts standards under section 1111(b)(1) of the Act, an analysis of available data on the achievement of students in the school.

(2) Schoolwide reform strategies that—

(i) Provide opportunities, based on best knowledge and practice, for all children in the school to meet the State's proficient and advanced levels of student performance;

(ii) Are based on effective means of improving the achievement of children, such as utilizing research-based teaching strategies;

(iii) Use effective instructional strategies that—

(A) Increase the amount and quality of learning time, such as providing an extended school year and before- and after-school and summer programs;

(B) Provide an enriched and accelerated curriculum; and

(C) Meet the educational needs of historically underserved populations;

(iv) (A) Address the needs of all children in the school, particularly the needs of children who are members of the target population of any program that is included in the schoolwide program under paragraph (c) of this section; and

(B) Address how the school will determine if those needs have been met; and

(v) Are consistent with, and designed to implement, the State and local improvement plans, if any, approved under Title III of the Goals 2000: Educate America Act.

(3) Instruction by highly qualified professional staff.

(4)(i) Professional development, in accordance with section 1119 of the Act, for teachers and aides and, where appropriate, principals, pupil services personnel, other school staff, and parents to enable all children in the school to meet the State's student performance standards.

(ii) The school shall devote sufficient resources to effectively carry out its responsibilities for professional development, either alone or in consortia with other schools.

(5) Strategies to increase parental involvement, such as family literacy services.

(6) Strategies in an elementary school for assisting preschool children in the transition from early childhood programs, such as Head Start, Even Start, or a State-run preschool program, to the schoolwide program.

(7) Strategies to involve teachers in the decisions regarding the use of additional local, high-quality student assessments, if any, under section 1112(b)(1) of the Act to provide information on, and to improve, the performance of individual students and the overall instructional program.

(8) (i) Activities to ensure that students who experience difficulty mastering any of the standards required by section 1111(b) of the Act during the school year will be provided effective, timely additional assistance, which must include—

(A) Strategies to ensure that students' difficulties are identified on a timely basis and to provide sufficient information on which to base effective assistance;

(B) To the extent the school determines feasible using funds under this subpart, periodic training for teachers in how to identify those difficulties and to provide assistance to individual students; and

(C) For any student who has not met those standards, parent-teacher conferences to discuss—

(*1*) What the school will do to help the student meet the standards;

(*2*) What the parents can do to help the student improve the student's performance; and

(*3*) Additional assistance that may be available to the student at the school or elsewhere in the community.

(ii) This provision does not—

(A) Require the school or LEA to develop an individualized education program (IEP) for each student identified under paragraph (d)(8) of this section; or

(B) Relieve the school or LEA from the requirement under the IDEA to develop IEPs for students with disabilities.

(e) *Schoolwide program plan.* (1) An eligible school that desires to operate a schoolwide program shall develop, in

consultation with the LEA and its school support team or other technical assistance provider, a comprehensive plan for reforming the total instructional program in the school that—

(i) Incorporates the components under paragraph (d) of this section;

(ii) Describes how the school will use resources under this subpart and from other sources to implement those components;

(iii) Includes a list of State and local programs and other Federal programs under paragraph (c) of this section that will be included in the schoolwide program; and

(iv) (A) If the State has developed or adopted a State assessment system under section 1111(b)(3) of the Act—

(*1*) Describes how the school will provide individual student assessment results, including an interpretation of those results, to the parents of each child who participates in that assessment; and

(*2*) Provides for the disaggregation of data on the assessment results of students and the reporting of those data in accordance with § 200.5(a); or

(B) If the State has not developed or adopted a State assessment system under section 1111(b)(3) of the Act, describes the data on the achievement of students in the school and effective instructional and school improvement practices on which the plan is based.

(2) The schoolwide program plan must be—

(i) Developed during a one-year period unless—

(A) The LEA, after considering the recommendation of its technical assistance providers, determines that less time is needed to develop and implement the schoolwide program; or

(B) The school is operating a schoolwide program under section 1015 of Chapter 1 of Title I of the Act during the 1994–1995 school year, in which case the school may continue its schoolwide program but shall amend its current plan or develop a new plan in accordance with this section during the first year it receives funds under this part;

(ii) Developed with the involvement of the community to be served and individuals who will carry out the plan, including—

(A) Teachers;

(B) Principals;

(C) Other school staff;

(D) Pupil services personnel, if appropriate;

(E) Parents of students in the school; and

(F) If the plan relates to a secondary school, students from the school;

(iii) Available to the LEA, parents, and the public;

(iv) Translated, to the extent feasible, into any language that a significant percentage of the parents of participating children in the school speak as their primary language; and

(v) If appropriate, developed in coordination with other programs, including those under the School-to-Work Opportunities Act of 1994, the Carl D. Perkins Vocational and Applied Technology Education Act, and the National and Community Service Act of 1990.

(3) The schoolwide program plan remains in effect for the duration of the school's participation under this section.

(4) A school operating a schoolwide program shall review and revise its plan, as necessary, to reflect changes in its schoolwide program or changes to reflect State standards established after the plan was developed.

(f) *Effect of operating a schoolwide program*. (1) No school operating a schoolwide program shall be required to—

(i) Identify particular children under this subpart and under any other Federal program included under paragraph (c) of this section as eligible to participate in the schoolwide program;

(ii) Document that funds available under this subpart and any other Federal program included under paragraph (c) of this section are used to benefit only the intended beneficiaries of the respective programs; or

(iii) Demonstrate that the particular services paid for with funds under this subpart and under any other Federal program included under paragraph (c) of this section supplement the services regularly provided in that school.

(2) A school operating a schoolwide program shall use funds available under this subpart and under any other Federal program included under paragraph (c) of this section only to supplement the total amount of funds that would, in the absence of those funds, be made available from non-Federal sources for that school, including funds needed to provide services that are required by law for children with disabilities and children with limited-English proficiency.

(Authority: 20 U.S.C. 6314, 6396(b))

§ 200.9 [Reserved]

Participation of Eligible Children in Private Schools

§ 200.10 Responsibilities for providing services to children in private schools.

(a) An LEA shall, after timely and meaningful consultation with appropriate private school officials, provide special educational services or other benefits under this subpart, on an equitable basis, to eligible children who are enrolled in private elementary and secondary schools in accordance with the requirements in §§ 200.11 through 200.17 and section 1120 of the Act.

(b) (1) Eligible private school children are children who—

(i) Reside in a participating school attendance area of the LEA; and

(ii) Meet the criteria in section 1115(b) of the Act.

(2) If an LEA identifies a public school as eligible on the basis of enrollment, rather than because it serves an eligible school attendance area, the LEA shall, in consultation with private school officials, determine an equitable way to identify eligible private school children.

(3) Among the eligible private school children, the LEA shall select children to participate in a manner that is consistent with the provisions in § 200.11.

(Authority: 20 U.S.C. 6315(b); 6321(a))

§ 200.11 Factors for determining equitable participation of children in private schools.

(a) *Equal expenditures.* (1) Expenditures of funds made available under this subpart for services for eligible private school children in the aggregate must be equal to the amount of funds generated by private school children from low-income families under § 200.28.

(2) An LEA shall meet this requirement as follows:

(i) Before determining equal expenditures under paragraph (a)(1) of this section, the LEA shall reserve, from the LEA's whole allocation, funds needed to carry out § 200.27.

(ii) The LEA shall reserve the amounts of funds generated by private school children under § 200.28 and, in consultation with appropriate private school officials, may—

(A) Combine those amounts to create a pool of funds from which the LEA provides equitable services to eligible private school children, in the aggregate, in greatest need of those services; or

(B) Provide equitable services to eligible children in each private school with the funds generated by children from low-income families under § 200.28 who attend that private school.

(b) *Services on an equitable basis.* (1) The services that an LEA provides to eligible private school children must be equitable in comparison to the services and other benefits provided to public school children participating under this subpart.

(2) Services are equitable if the LEA—

(i) Addresses and assesses the specific needs and educational progress of eligible private school children on a comparable basis as public school children;

(ii) Meets the equal expenditure requirements under paragraph (a) of this section; and

(iii) Provides private school children with an opportunity to participate that—(A) Is equitable to the opportunity provided to public school children; and

(B) Provides reasonable promise of those children achieving the high levels called for by the State's student performance standards.

(3) The LEA shall make the final decisions with respect to the services to be provided to eligible private school children.

(Authority: 20 U.S.C. 6321(a))

§ 200.12 Requirements to ensure that funds do not benefit a private school.

(a) An LEA shall use funds under this subpart to provide services that supplement, and in no case supplant, the level of services that would, in the absence of Title I services, be available to participating children in private schools.

(b) An LEA shall use funds under this subpart to meet the special educational needs of participating private school children, but not for—

(1) The needs of the private school; or

(2) The general needs of children in the private school.

(Authority: 20 U.S.C. 6321(a), 6322(b))

§ 200.13 Requirements concerning property, equipment, and supplies for the benefit of private school children.

(a) A public agency must keep title to and exercise continuing administrative control of all property, equipment, and supplies that the public agency acquires with funds under this subpart for the benefit of eligible private school children.

(b) The public agency may place equipment and supplies in a private school for the period of time needed for the program.

(c) The public agency shall ensure that the equipment and supplies placed in a private school—

(1) Are used only for Title I purposes; and

(2) Can be removed from the private school without remodeling the private school facility.

(d) The public agency shall remove equipment and supplies from a private school if—

(1) The equipment and supplies are no longer needed for Title I purposes; or

(2) Removal is necessary to avoid unauthorized use of the equipment or supplies for other than Title I purposes.

(e) No funds under this subpart may be used for repairs, minor remodeling, or construction of private school facilities.

(f) For the purpose of this section, the term *public agency* includes the LEA.

(Authority: 20 U.S.C. 6321(c))

§ 200.14 [Reserved]

Capital Expenses

§ 200.15 Payments to SEAs for capital expenses.

(a) From the amount appropriated for capital expenses under section 1002(e) of the Act, the Secretary pays a State an amount that bears the same ratio to the amount appropriated as the number of private school children in the State who received services under this subpart in the most recent year for which data satisfactory to the Secretary are available bears to the total number of private school children served in that same year in all the States.

(b) The Secretary reallocates funds not used by a State for purposes of § 200.16 among other States on the basis of their respective needs.

(Authority: 20 U.S.C. 6321(e)(1))

§ 200.16 Payments to LEAs for capital expenses.

(a)(1)(i) An LEA may apply to the SEA for a payment to cover capital expenses that the LEA, in providing equitable services to eligible private school children—

(A) Is currently incurring; or

(B) Would incur because of an expected increase in the number of private school children to be served.

(ii) An LEA may apply for a payment to cover capital expenses it incurred in prior years for which it has not been reimbursed if the LEA demonstrates that its current needs for capital expenses have been met.

(2) *Capital expenses* means only expenditures for noninstructional goods and services that are incurred as a result of implementation of alternative delivery systems to comply with the requirements of *Aguilar v. Felton*. These expenditures—

(i) Include—

(A) The purchase, lease, and renovation of real and personal property (including mobile educational units, and leasing of neutral sites or space);

(B) Insurance and maintenance costs;

(C) Transportation; and

(D) Other comparable goods and services, including noninstructional computer technicians; and

(ii) Do not include the purchase of instructional equipment such as computers.

(b) An SEA shall distribute funds it receives under § 200.15 to LEAs that apply on the basis of need.

(Authority: 20 U.S.C. 6321(e))

§ 200.17 Use of LEA payments for capital expenses.

(a) Unless an LEA is authorized by the SEA to reimburse itself for capital expenses incurred in prior years, the LEA shall use payments received under § 200.16 to cover capital expenses the LEA is incurring or will incur to maintain or increase the number of private school children being served.

(b) The LEA may not take the payments received under § 200.16 into account in meeting the requirements in § 200.11(a).

(c) The LEA shall account separately for payments received under § 200.16.

(Authority: 20 U.S.C. 6321(e)(3))

§ 200.18–200.19 [Reserved]

Procedures for the Within-State Allocation of LEA Program Funds

§ 200.20 Allocation of funds to LEAs.

(a) *Subcounty allocations.* (1) Except as provided in paragraph (b) of this section, § 200.23(c)(1) and (3)(ii), and § 200.25, an SEA shall allocate the county amounts determined by the Secretary for basic grants, concentration grants, and targeted grants to each eligible LEA within the county on the basis of the number of children counted in § 200.21.

(2) If an LEA overlaps a county boundary, the SEA shall make, on a proportionate basis, a separate allocation to the LEA from the county aggregate amount for each county in which the LEA is located, provided the LEA is eligible for a grant.

(b) *Statewide allocations.* (1) In any State in which a large number of LEAs overlap county boundaries, an SEA may apply to the Secretary for authority to make allocations under basic grants or targeted grants directly to LEAs without regard to counties.

(2) In its application, the SEA shall—

(i) Identify the data in § 200.21(b) the SEA will use for LEA allocations; and

(ii) Provide assurances that—

(A) Allocations will be based on the data approved by the Secretary under this paragraph; and

(B) A procedure has been established through which an LEA dissatisfied with the determination by the SEA may appeal directly to the Secretary for a final determination.

(c) *LEAs containing two or more counties in their entirety.* If an LEA contains two or more counties in their entirety, the SEA shall allocate funds

under paragraphs (a) and (b) of this section to each county as if such county were a separate LEA.

(Authority: 20 U.S.C. 6333–6335)

§ 200.21 Determination of the number of children eligible to be counted.

(a) *General.* An SEA shall count the number of children aged 5–17, inclusive, from low-income families and the number of children residing in local institutions for neglected children.

(b) *Children from low-income families.* (1) An SEA shall count the number of children from low-income families in the school districts of the LEAs using the best available data. The SEA shall use the same measure of low-income throughout the State.

(2) An SEA may use one of the following options to obtain its count of children from low-income families:

(i) The factors under section 1124(c)(1) of the Act (excluding children in local institutions for neglected or delinquent children), which include—

(A) Census data on children in families below the poverty level;

(B) Data on children in families above poverty receiving payments under the program of Aid to Families with Dependent Children (AFDC); and

(C) Data on foster children.

(ii) Alternative data that an SEA determines best reflect the distribution of children from low-income families and that are adjusted to be equivalent in proportion to the total number of children counted under section 1124(c) of the Act (excluding children in local institutions for neglected or delinquent children).

(iii) Data that more accurately reflect the distribution of poverty.

(c) *Children in local institutions for neglected children.*

The SEA shall count the number of children ages 5 to 17, inclusive, in the LEA who resided in a local institution for neglected children—and were not counted under subpart 1 of Part D of Title I (programs for neglected or delinquent children operated by State agencies)—for at least 30 consecutive days, at least one day of which was in the month of October of the preceding fiscal year.

(Authority: 20 U.S.C. 6333(c))

§ 200.22 Allocation of basic grants.

(a) *Eligibility.* An LEA is eligible for a basic grant if—(1) In school year 1995–96, there are at least 10 children counted under § 200.21 in the LEA; and

(2) Beginning in school year 1996–97—

(i) There are at least 10 children counted under § 200.21 in the LEA; and

(ii) The number of those children is greater than two percent of the LEA's total population aged 5 to 17 years, inclusive.

(b) *Amount of the LEA grant.* An SEA shall allocate basic grant funds to eligible LEAs as provided in § 200.20, except that the SEA shall apply the hold-harmless provisions described in § 200.25.

(Authority: 20 U.S.C. 6333)

§ 200.23 Allocation of concentration grants.

(a) *Eligibility.* An LEA is eligible for a concentration grant if—

(1) The LEA is eligible for a basic grant under paragraph § 200.22(a); and

(2) The number of children counted under § 200.21 in the LEA exceeds—

(i) 6,500; or

(ii) 15 percent of the LEA's total population ages 5 to 17, inclusive.

(b) *Amount of the grant.* (1) Except as provided in paragraph (c) of this section, an SEA shall allocate a county's concentration grant funds only to LEAs that—

(i) Lie, in whole or in part, within the county; and

(ii) Meet the eligibility criteria in paragraph (a) of this section.

(2) An SEA shall allocate concentration grant funds to eligible LEAs as provided in § 200.20(a), except that the SEA shall apply the hold-harmless provision described in § 200.25(a).

(c) *Exceptions.* (1) *Eligible LEAs in ineligible counties.*

(i) An SEA may reserve not more than two percent of the amount of concentration grant funds it receives to make direct allocations to eligible LEAs that are located in counties that do not receive a concentration grant allocation.

(ii) If an SEA plans to reserve concentration grant funds under paragraph (c)(1)(i) of this section, the SEA, before allocating any concentration grant funds under paragraph (b) of this section, shall—

(A) Determine which LEAs located in ineligible counties are eligible to receive concentration grant funds;

(B) Determine the appropriate amount to be reserved;

(C) Proportionately reduce the amount available for concentration grants for eligible counties or LEAs to provide the reserved amount, except that for school year 1996–97 an SEA may not reduce an LEA's allocation below the hold-harmless amount determined under § 200.25(a);

(D) Rank order the LEAs eligible for concentration grant funds that are located in ineligible counties according to the number or percentage of children counted under § 200.21;

(E) Select in rank order, those LEAs that the SEA plans to provide concentration grant funds; and

(F) Distribute the reserved funds among the selected LEAs based on the number of children counted under § 200.21.

(2) *Eligible counties with no eligible LEAs.* In a county in which no LEA meets the eligibility criteria in paragraph (a) of this section, an SEA shall—

(i) Identify those LEAs in which either the number or percentage of children counted under § 200.21 exceeds the average number or percentage of those children in the county; and

(ii) Allocate concentration grant funds for the county among the LEAs identified in paragraph (c)(2)(i) of this section based on the number of children counted under § 200.21 in each LEA compared to the number of those children in all those LEAs.

(3) *States receiving minimum allocations.* In a State that receives a minimum concentration grant under section 1124A(d) of the Act, the SEA shall—

(i) Allocate concentration grant funds among LEAs in the State under paragraphs (a), (b), and (c)(1) and (2) of this section; or

(ii) Without regard to the counties in which the LEAs are located-(A) Identify those LEAs in which either the number or percentage of children counted under § 200.21 exceeds the average number or percentage of those children in the State; and

(B) Allocate concentration grant funds among the LEAs identified in paragraph (c)(3)(ii)(A) of this section based on the number of children counted under § 200.21 in each LEA.

(Authority: 20 U.S.C. 6334)

§ 200.24 Allocation of targeted grants.

(a) *Eligibility.* An LEA is eligible for a targeted grant if—

(1) There are at least 10 children counted under § 200.21 in the LEA; and

(2) The number of those children is at least five percent of the LEA's total population ages 5 to 17 years, inclusive.

(b) *Weighted child count.* In determining an LEA's grant, the SEA shall compute a weighted child count in accordance with section 1125(c) of the Act by taking the larger of—

(1) *Percent-weighted child count.* The number of children counted under § 200.21 multiplied by the weights shown in the following table, with the weights applied in a step-wise manner so that only those children above each weighting threshold receive the higher weight:

LEA percentage of children counted under § 200.21 as a percent of total children ages 5 through 17	Weights
0 to 14.265%	1.00
More than 14.265% up to 21.553%	1.75
More than 21.553% up to 29.223%	2.50
More than 29.223% up to 36.538%	3.25
More than 36.538%	4.00

or;

(2) *Number-weighted child count.* The number of children counted under § 200.21 multiplied by the weights shown in the following table, with the weights applied in a step-wise manner so that only those children above each weighting threshold receive the higher weight:

LEA number of children counted under § 200.21	Weights
1 to 575	1.0
576 to 1,870	1.5
1,871 to 6,910	2.0
6,911 to 42,000	2.5
42,001 or more	3.0

(c) *Amount of LEA grant.* An SEA shall allocate targeted grant funds to eligible LEAs as provided in § 200.20 based on the weighted child count determined in paragraph (b) of this section, except that the SEA shall apply the hold-harmless provisions described in § 200.25.

(Authority: 20 U.S.C. 6335)

§ 200.25 Applicable hold-harmless provisions.

(a) *General.* (1) An SEA may not reduce the allocation of an eligible LEA below the hold-harmless amounts established under section 1122(c) of the Act.

(2) The hold-harmless protection limits the maximum reduction in an LEA's allocation when compared to the LEA's allocation for the preceding year.

(3) The hold-harmless shall be applied separately for basic grants, concentration grants, and targeted grants, and shall be applied for each grant formula only in those years authorized under section 1122(c) of the Act, as shown in the table contained in paragraph (a)(4) of this section.

(4) Under section 1122(c) of the Act, the hold-harmless percentage varies based on the year and, for school years 1997–98 and beyond, based on the LEA's number of children counted under § 200.21 as a percentage of the total number of children ages 5–17, inclusive, in the LEA, as shown in the following table:

School year	LEA's § 200.21 children as a percentage of children ages 5–17, inclusive	Hold-harmless percentage	Applicable grant formulas
1995–96	Not applicable	85	Basic Grants.
1996–97	Not applicable	100	Basic Grants and Concentration Grants.
1997–98 and beyond.	30% or more	95	Basic Grants and Targeted Grants.
	15% or more and less than 30%	90	
	Less than 15%	85	

(5) For school year 1995–96, the SEA shall compute each LEA's hold-harmless amount without regard to the amount the LEA received for delinquent children counted under section 1005 of Chapter 1 of Title I of the Elementary and Secondary Education Act of 1965 as in effect on September 30, 1994.

(b) *Adjustment for insufficient funds.* (1) *School year 1995–96.* If the Secretary's allocation for a county is not sufficient to give an LEA 85 percent of the amount it received for school year 1994–95, without regard to the amount the LEA received for delinquent children, the SEA may use funds received under Part D, subpart 2 (local agency programs) of the Act to bring such LEA up to its hold-harmless amount.

(2) *School years 1997–98 and beyond.* If the Secretary's allocation for a county is not sufficient to meet the LEA hold-harmless requirements of paragraph (a) of this section, the SEA shall reallocate funds proportionately from all other LEAs in the State that are receiving funds in excess of the hold-harmless amounts specified in paragraph (a) of this section.

(c) *Eligibility for hold-harmless protection.* An LEA must be eligible for basic grant, concentration grant, and targeted grant funds in order for the respective provisions in paragraphs (a) and (b) of this section to apply.

(Authority: 20 U.S.C. 6332(c))

§ 200.26 [Reserved]

Procedures for the Within-District Allocation of LEA Program Funds

§ 200.27 Reservation of funds by an LEA.

Before allocating funds in accordance with § 200.28, an LEA shall reserve funds as are reasonable and necessary to—

(a) Provide services comparable to those provided to children in participating school attendance areas and schools to serve—

(1) Children in local institutions for neglected children; and

(2) Where appropriate—

(i) Eligible homeless children who do not attend participating schools, including providing educationally related support services to children in shelters;

(ii) Children in local institutions for delinquent children; and

(iii) Neglected and delinquent children in community-day school programs;

(b) Meet the requirements for parental involvement in section 1118(a)(3) of the Act;

(c) Administer programs for public and private school children under this part, including special capital expenses not paid for from funds provided under § 200.16 that are incurred as a result of implementing alternative delivery systems to comply with the requirements of *Aguilar* v. *Felton;* and

(d) Conduct other authorized activities such as professional development, school improvement, and coordinated services.

(Authority: 20 U.S.C. 6313(c)(3), 6317(c), 6319(a)(3), 6320)

§ 200.28 Allocation of funds to school attendance areas and schools.

(a)(1) An LEA shall allocate funds under this subpart to school attendance areas or schools, identified as eligible and selected to participate under section 1113(a) or (b) of the Act, in rank order

on the basis of the total number of children from low-income families in each area or school.

(2)(i) In calculating the total number of children from low-income families, the LEA shall include children from low-income families who attend private schools, using—

(A) The same poverty data, if available, as the LEA uses to count public school children; or

(B) If the same data are not available, comparable data—

(*1*) Collected through alternative means such as a survey; or

(*2*) From existing sources such as AFDC or tuition scholarship programs.

(ii) If complete actual poverty data are not available on private school children, an LEA may extrapolate from actual data on a representative sample of private school children the number of children from low-income families who attend private schools.

(iii) For the 1995–96 school year only, if adequate data on the number of private school children from low-income families are not available under paragraph (a)(2) (i) or (ii) of this section, the LEA shall derive the number of private school children from low-income families by applying the poverty percentage of each participating public school attendance area to the number of private school children who reside in that area.

(3) If an LEA ranks its school attendance areas or schools below 75 percent poverty by grade span groupings, the LEA may determine the percentage of children from low-income families in the LEA as a whole for each grade span grouping.

(b)(1) Except as provided in paragraphs (b)(2) and (d) of this section, an LEA shall allocate to each participating school attendance area or school an amount for each low-income child that is at least 125 percent of the per-pupil amount of funds the LEA received for that year under subpart 2 of Part A of Title I. The LEA shall calculate this per-pupil amount before the LEA reserves any funds under § 200.27, using the poverty measure selected by the LEA under section 1113(a)(5) of the Act.

(2) If an LEA is serving only school attendance areas or schools in which the percentage of children from low-income families is 35 percent or more, the LEA is not required to allocate a per-pupil amount of at least 125 percent.

(c) An LEA is not required to allocate the same per-pupil amount to each participating school attendance area or school provided the LEA allocates higher per-pupil amounts to areas or schools with higher concentrations of poverty than to areas or schools with lower concentrations of poverty.

(d) An LEA may reduce the amount of funds allocated under this section to a school attendance area or school if the area or school is spending supplemental State or local funds for programs that meet the requirements in § 200.62(c).

(e) If an LEA contains two or more counties in their entirety, the LEA shall distribute to schools within each county a share of the LEA's total grant that is no less than the county's share of the child count used to calculate the LEA's grant.

(Authority: 20 U.S.C. 6313(c), 6333(c)(2))

§ 200.29 [Reserved]

Subpart B—Even Start Family Literacy Program

§ 200.30 Migrant Education Even Start Program Definition.

Eligible participants under the Migrant Education Even Start Program (MEES) are those who meet the definitions of a migratory child, a migratory agricultural worker or a migratory fisher in § 200.40.

(Authority: 20 U.S.C. 6362, 6511)

§§ 200.31—200.39 [Reserved]

Subpart C—Migrant Education Program

§ 200.40 Program definitions.

The following definitions apply to programs and projects operated under this subpart:

(a) *Agricultural activity* means—

(1) Any activity directly related to the production or processing of crops, dairy products, poultry or livestock for initial commercial sale or personal subsistence;

(2) Any activity directly related to the cultivation or harvesting of trees; or

(3) Any activity directly related to fish farms.

(b) *Fishing activity* means any activity directly related to the catching or processing of fish or shellfish for initial commercial sale or personal subsistence.

(c) *Migratory agricultural worker* means a person who, in the preceding 36 months, has moved from one school district to another, or from one administrative area to another within a State that is comprised of a single school district, in order to obtain temporary or seasonal employment in agricultural activities (including dairy work) as a principal means of livelihood.

(d) *Migratory child* means a child who is, or whose parent, spouse, or guardian is, a migratory agricultural worker, including a migratory dairy worker, or a migratory fisher, and who, in the preceding 36 months, in order to obtain, or accompany such parent, spouse, guardian in order to obtain, temporary or seasonal employment in agricultural or fishing work—

(1) Has moved from one school district to another;

(2) In a State that is comprised of a single school district, has moved from one administrative area to another within such district; or

(3) Resides in a school district of more than 15,000 square miles, and migrates a distance of 20 miles or more to a temporary residence to engage in a fishing activity.

(e) *Migratory fisher* means a person who, in the preceding 36 months, has moved from one school district to another, or from one administrative area to another within a State that is comprised of a single school district, in order to obtain temporary or seasonal employment in fishing activities as a principal means of livelihood. This definition also includes a person who, in the preceding 36 months, resided in a school district of more than 15,000 square miles, and moved a distance of 20 miles or more to a temporary residence to engage in a fishing activity as a principal means of livelihood.

(f) *Principal means of livelihood* means that temporary or seasonal agricultural or fishing activity plays an important part in providing a living for the worker and his or her family.

(Authority: 20 U.S.C. 6391–6399, 6511)

§ 200.41 Use of program funds for unique program function costs.

An SEA may use the funds available from its State Migrant Education Program to carry out other administrative activities, beyond those allowable under § 200.61, that are unique to the MEP, including those that are the same or similar to those performed by LEAs in the State under subpart A. These activities include but are not limited to—

(a) Statewide identification and recruitment of eligible migratory children;

(b) Interstate and intrastate coordination of the State MEP and its local projects with other relevant programs and local projects in the State and in other States;

(c) Procedures for providing for educational continuity for migratory children through the timely transfer of educational and health records, beyond that required generally by State and local agencies.

(d) Collecting and using information for accurate distribution of subgrant funds; and

(e) Development and implementation of a statewide plan for needs assessment and service delivery.

(f) Supervision of instructional and support staff.

(Authority: 20 U.S.C. 6392, 6511)

§ 200.42 Responsibilities of SEAs and operating agencies for assessing the effectiveness of the MEP.

(a) Each SEA and operating agency receiving funds under the MEP has the responsibility to determine the effectiveness of its program and projects in providing migratory students with the opportunity to meet the same challenging State content and performance standards, required under § 200.2, that the State has established for all children.

(b) To determine the effectiveness of its program and projects, each SEA and operating agency receiving MEP funds shall, wherever feasible, use the same high-quality yearly student assessments or transitional assessments that the State establishes for use in meeting the requirements of § 200.4.

(c) In a project where it is not feasible to use the same student assessments that are being used to meet the requirements of § 200.4 (e.g., in a summer-only project, or in a project where no migratory students are enrolled at the time the State-established assessment takes place), the SEA must ensure that the relevant operating agency carries out some other reasonable process or processes for examining the effectiveness of the project.

(Authority: 20 U.S.C. 6394)

§ 200.43 Responsibilities of SEAs and operating agencies for improving services to migratory children.

While the specific school improvement requirements of section 1116 of the statute do not apply to the MEP, SEAs and local operating agencies receiving MEP funds shall use the results of the assessments carried out under § 200.42 to improve the services provided to migratory children.

(Authority: 20 U.S.C. 6394)

§ 200.44 Use of MEP funds in schoolwide projects.

Funds available under Part C of Title I of the Act may be used in a schoolwide program subject to the requirements of § 200.8(c)(3)(ii)(B)(*1*).

(Authority: 20 U.S.C. 6396)

§ 200.45 Responsibilities for participation of children in private schools.

An SEA and its operating agencies shall conduct programs and projects under this subpart in a manner consistent with the basic requirements of section 1120 of the Act.

(Authority: 20 U.S.C. 6394)

§§ 200.46–200.49 [Reserved]

Subpart D—Prevention and Intervention Programs for Children and Youth Who Are Neglected, Delinquent, or At-Risk of Dropping Out

§ 200.50 Program definitions.

(a) The following definitions apply to the programs authorized in Part D, subparts 1 and 2 of Title I of the Act:

Children and Youth means the same as ''children'' as that term is defined in § 200.65(a).

(b) The following definitions apply to the programs authorized in Part D, subpart 1 of Title I of the Act:

Institution for delinquent children and youth means, as determined by the SEA, a public or private residential facility that is operated primarily for the care of children and youth who—

(1) Have been adjudicated to be delinquent or in need of supervision; and

(2) Have had an average length of stay in the institution of at least 30 days.

Institution for neglected children and youth means, as determined by the SEA, a public or private residential facility, other than a foster home, that is operated primarily for the care of children and youth who—

(1) Have been committed to the institution or voluntarily placed in the institution under applicable State law due to abandonment, neglect, or death of their parents or guardians; and

(2) Have had an average length of stay in the institution of at least 30 days.

Regular program of instruction means an educational program (not beyond grade 12) in an institution or a community day program for neglected or delinquent children that consists of classroom instruction in basic school subjects such as reading, mathematics, and vocationally oriented subjects, and that is supported by non-Federal funds. Neither the manufacture of goods within the institution nor activities related to institutional maintenance are considered classroom instruction.

(c) The following definitions apply to the local agency program authorized in Part D, subpart 2 of Title I of the Act:

Immigrant children and youth and *Limited English Proficiency* have the same meanings as those terms are defined in section 7501 of the Act, except that the terms ''individual'' and ''children and youth'' used in those definitions mean ''children and youth'' as defined in this section.

Locally operated correctional facility means a facility in which persons are confined as a result of a conviction for a criminal offense, including persons under 21 years of age. The term also includes a local public or private institution and community day program or school not operated by the State that serves delinquent children and youth.

Migrant youth means the same as ''migratory child'' as that term is defined in § 200.40(d).

(Authority: 20 U.S.C. 6432, 6472)

§ 200.51 SEA counts of eligible children.

To receive an allocation under Part D, subpart 1 of Title I of the Act, an SEA must provide the Secretary with a count of children and youth under the age of 21 enrolled in a regular program of instruction operated or supported by State agencies in institutions or community day programs for neglected or delinquent children and youth and adult correctional institutions as specified in paragraphs (a) and (b) of this section:

(a) *Enrollment.* (1) To be counted, a child or youth must be enrolled in a regular program of instruction for at least—

(i) 20 hours per week if in an institution or community day program for neglected or delinquent children; or

(ii) 15 hours per week if in an adult correctional institution.

(2) The State agency shall specify the date on which the enrollment of neglected or delinquent children is determined under paragraph (a)(1) of this section, except that the date specified shall be—

(i) Consistent for all institutions or community day programs operated by the State agency; and

(ii) Represent a school day in the calendar year preceding the year in which funds become available.

(b) *Adjustment of enrollment.* The SEA shall adjust the enrollment for each institution or community day program served by a State agency by—

(1) Multiplying the number determined in paragraph (a) of this section by the number of days per year the regular program of instruction operates; and

(2) Dividing the result of paragraph (b)(1) of this section by 180.

(c) *Date of submission.* The SEA must annually submit the data in paragraph (b) of this section no later than January 31.

(Authority: 20 U.S.C. 6432)

§§ 200.52–200.59 [Reserved]

Subpart E—General Provisions

§ 200.60 Reservation of funds for State administration and school improvement.

(a) *State administration.* An SEA may reserve for State administration activities authorized in section 1603 of the Act no more than—

(1) One percent from each of the amounts allocated to the State or Outlying Area under section 1002(a), (c), and (d) of the Act; or

(2)(i) $400,000 ($50,000 for the Outlying Areas), whichever is greater.

(ii) An SEA reserving $400,000 under paragraph (a)(2)(i) of this section shall reserve proportionate amounts from each of the amounts allocated to the State or Outlying Area under section 1002(a), (c), and (d) of the Act.

(b) *School improvement.* (1) To carry out school improvement activities authorized under sections 1116 and 1117 of the Act, an SEA may reserve no more than .5 percent from each of the amounts allocated to the State or Outlying Area under section 1002(a), (c), and (d) of the Act.

(2)(i) An SEA shall have available from funds received under section 1002(f) of the Act or reserved under paragraph (b)(1) of this section no less than $200,000 ($25,000 for the Outlying Areas) to carry out school improvement activities.

(ii)(A) If funds made available for school improvement under section 1002(f) of the Act do not equal $200,000 ($25,000 for Outlying Areas), the SEA shall reserve funds in accordance with paragraph (b)(1) of this section.

(B) If the amount reserved under paragraph (b)(1) when added to funds received under section 1002(f), does not equal $200,000 ($25,000 for the Outlying Areas), the SEA shall reserve additional funds under section 1002(a), (c), and (d) as are necessary to make $200,000 ($25,000 for the Outlying Areas) available to the SEA.

(c) *Reservation from section 1002(a) funds.* In reserving funds for State administration and school improvement under section 1002(a) of the Act, an SEA shall—

(1) Reserve proportionate amounts from each of the State's basic grant, concentration grant, and targeted grant allocations; and

(2) Ensure that from the funds remaining for basic grants, concentration grants, and targeted grants after reserving funds for State administration and school improvement, no eligible LEA receives less than the hold-harmless amounts determined under § 200.25, except when the amounts remaining are insufficient to pay all LEAs the hold-harmless amounts provided in § 200.25, the SEA shall ratably reduce each LEA's hold harmless allocation to the amount available.

(Authority: 20 U.S.C. 6303, 6513(c))

§ 200.61 Use of funds reserved for State administration.

An SEA may use any of the funds that it has reserved under § 200.60(a) to perform general administrative activities necessary to carry out, at the State level, any of the programs authorized under Title I of the Act.

(Authority: 20 U.S.C. 6513(c))

§ 200.62 [Reserved]

§ 200.63 Supplement, not supplant.

(a) Except as provided in paragraph (c) of this section, a grantee or subgrantee under subparts A, C, or D of this part may use funds available under these subparts only to supplement the amount of funds that would be made available, in the absence of funds made available under subparts A, C, and D from non-Federal sources for the education of pupils participating in programs assisted under subparts A, C, and D and in no case may funds available under these subparts be used to supplant those non-Federal funds.

(b) To meet the requirement in paragraph (a) of this section, a grantee or subgrantee under subparts A, C, or D is not required to provide services under subparts A, C, or D through the use of a particular instructional method or in a particular instructional setting.

(c)(1) For purposes of determining compliance with paragraph (a) of this section, a grantee or subgrantee under subparts A or C may exclude supplemental State and local funds spent in any eligible school attendance area or eligible school for programs that meet the requirements of section 1114 or section 1115 of the Act.

(2) A supplemental State or local program will be considered to meet the requirements of section 1114 if the program—

(i) Is implemented in a school that meets the schoolwide poverty threshold for eligibility in § 200.8(b);

(ii) Is designed to upgrade the entire educational program in the school to support students in their achievement toward meeting the State's challenging student performance standards;

(iii) Is designed to meet the educational needs of all children in the school, particularly the needs of children who are failing, or most at risk of failing, to meet the State's challenging student performance standards; and

(iv) Uses the State's system of assessment to review the effectiveness of the program.

(3) A supplemental State or local program will be considered to meet the requirements of section 1115 if the program—

(i) Serves only children who are failing, or most at risk of failing, to meet the State's challenging student performance standards;

(ii) Provides supplementary services designed to meet the special educational needs of the children who are participating to support their achievement toward meeting the State's student performance standards that all children are expected to meet; and

(iii) Uses the State's system of assessment to review the effectiveness of the program.

(4) These conditions also apply to supplemental State and local funds expended under sections 1113(b)(1)(C) and 1113(c)(2)(B) of the Act.

(Authority: 20 U.S.C. 6322(b))

§ 200.64 Maintenance of effort.

(a) *General.* An LEA receiving funds under subparts A or C may receive its full allocation of funds under subparts A and C if it finds that either the combined fiscal effort per student or the aggregate expenditures of State and local funds with respect to the provision of free public education in the LEA for the preceding fiscal year was not less than 90 percent of combined fiscal effort per student or the aggregate expenditures for the second preceding fiscal year.

(b) *Meaning of ''preceding fiscal year''.* For purposes of determining maintenance of effort, the ''preceding fiscal year'' is the Federal fiscal year or the 12-month fiscal period most commonly used in a State for official reporting purposes prior to the beginning of the Federal fiscal year in which funds are available.

Example: For funds first made available on July 1, 1995, if a State is using the Federal fiscal year, the ''preceding fiscal year'' is Federal fiscal year 1994 (which began on October 1, 1993) and the ''second preceding fiscal year'' is Federal fiscal year 1993 (which began on October 1, 1992). If a State is using a fiscal year that begins on July 1, 1995, the ''preceding fiscal year'' is the 12-month period ending on June 30, 1994, and the ''second preceding fiscal year, is the period ending on June 30, 1993.

(c) *Expenditures.* (1) *To be considered.* In determining an LEA's compliance with the maintenance of effort requirement, the SEA shall consider the LEA's expenditures from State and local funds for free public education. These include expenditures

for administration, instruction, attendance and health services, pupil transportation services, operation and maintenance of plant, fixed charges, and net expenditures to cover deficits for food services and student body activities.

(2) *Not to be considered.* The SEA shall not consider the following expenditures in determining an LEA's compliance with the maintenance of effort requirement:

(i) Any expenditures for community services, capital outlay, and debt service; and

(ii) Any expenditures made from funds provided by the Federal Government for which the LEA is required to account to the Federal Government directly or through the SEA.

(Authority: 20 U.S.C. 6322(a))

§ 200.65 Definitions.

The following definitions apply to programs and projects operated under this part:

(a) *Children* means—

(1) Persons up through age 21 who are entitled to a free public education through grade 12; and

(2) Preschool children.

(b) *Fiscal year* means the Federal fiscal year—a period beginning on October 1 and ending on the following September 30—or another 12-month period normally used by the SEA for record-keeping.

(c) *Preschool children* means children who are—

(1) Below the age and grade level at which the agency provides free public education; and

(2) Of an age at which they can benefit from an organized instructional program provided in a school or educational setting.

(Authority: 20 U.S.C. 6315, 6511)

§§ 200.66–200.69 [Reserved]

Appendix—Analysis of Comments and Changes

(**Note:** This appendix will not be codified in the Code of Federal Regulations)

TITLE I—HELPING DISADVANTAGED CHILDREN MEET HIGH STANDARDS

Subpart A—Improving Basic Programs Operated by Local Educational Agencies

Standards, Assessment, and Accountability

Section 200.1 Contents of a State Plan

Comment: One commenter suggested that the regulations include the assurances or a reference to the assurances required by section 1111(c) of Title I to be included in a State plan.

Discussion: The assurances in section 1111(c) relate to the additional responsibilities of States to support teaching and learning. The Department mailed to all States guidance for the development of a Title I State plan and for consolidated applications that include Title I. There is no need also to reference the assurances in the regulations.

Changes: None.

Comment: A number of commenters commented on the requirement in § 200.1(b)(2)(iii) of the regulations to identify the languages other than English for which yearly student assessments are needed but not available, and then develop assessments for all those languages according to a timetable established in the State plan. Several commenters contended that this requirement is unreasonable because it would be very expensive and time consuming. Moreover, in some cases, the assessment would apply only to a few students and might not meet the same standards of validity and reliability established for other assessments. Several commenters suggested that the development of these assessments in languages other than English be required only ''to the extent practicable,'' tied to a minimum percentage of students that speak a certain language in a State, or only be required when instruction is actually given in that language. One commenter suggested that the requirement to develop a timetable for progress towards the development of these assessments is unreasonable because of the large number of languages spoken in a State. Another commenter suggested that a survey rather than a binding regulation be used to identify languages other than English that are spoken by Title I participating students.

On the other hand, several commenters supported this requirement. One commenter emphasized that States have a special obligation with regard to assessing limited-English proficient (LEP) students and must make every effort to develop assessments in languages that will yield accurate information. Another commenter suggested that more specific reporting requirements be included for identifying spoken languages and developing assessments. One commenter suggested that the regulations provide guidelines for inclusion of LEP students in State assessments and another commenter suggested that the regulations address access to assistance from the Department's Office of Bilingual Education and Minority Languages Affairs.

Discussion: Section 1111(b)(3)(F)(iii) of Title I requires that each State's assessments provide for the inclusion of LEP students who shall be assessed, to the extent practicable, in the language and form most likely to yield accurate and reliable information on what such students know and can do to determine such students' mastery of skills in subjects other than English. Also, section 1111(b)(5) of Title I requires that each State plan identify the languages other than English that are present in the participating student population and indicate the languages for which yearly student assessments are not available and are needed.

Section 200.1(b)(2)(iii)(B) of the regulations requires each State plan to include a timetable for progress towards the development of these assessments to ensure that States match their needs for LEP assessments to a workable timetable that, over time, would improve participation of LEP students in high-quality, yearly assessments. The Secretary recognizes that there are many problems that must be addressed in the process, including issues involving time, expense, and usefulness of such assessments. To help address these issues, the Department's Office of Bilingual Education and Minority Languages Affairs and Office of Elementary and Secondary Education are developing nonregulatory guidance on options that States might consider in determining their own policy regarding the development of assessments in other languages and criteria for inclusion of LEP students.

Changes: None.

Comment: Two commenters suggested that Title I State plans include evidence that States used recognized professional and technical knowledge to develop challenging content standards and performance standards that may serve as benchmarks for student performance and as a means of issuing rewards and sanctions for schools and districts. Another commenter recommended that performance standards in Title I schools be comparable to those established for schools that serve middle- and upper-income families.

Discussion: Section 1111(b)(1)(D)(i) of Title I and § 200.2(a)(2)(i) of the regulations require States to demonstrate in their plan that they have established, or will establish, challenging content standards in academic subjects that specify what all children are expected to know and be able to do, contain coherent and rigorous content, and encourage the teaching of advanced skills to all

children. In addition, section 1111(b)(1)(D)(ii) of Title I and § 200.2(a)(2)(ii) of the regulations require States to establish challenging student performance standards that are aligned with the State's content standards and that include two levels of high performance and a third level of partial proficiency against which the progress of students and schools can be measured. Also, § 200.1(b)(1)(i)(B) of the regulations requires that a State plan include evidence that the State's procedure for setting student performance levels applies recognized professional and technical knowledge. Finally, provisions in sections 1116 and 1117 of Title I focus on recognized professional and technical knowledge as a basis for State systems for rewarding school districts and holding them accountable for progress. The Secretary believes these provisions adequately address the concerns of the commenters.

Changes: None.

Comment: Several commenters suggested that § 200.1(b)(2)(ii)(B) of the regulations, which requires the State plan to describe the transitional set of yearly statewide assessments the State will use to assess students' performance in mastering complex skills and challenging subject matter, be replaced with the statutory language in section 1111(b)(7) of Title I that, in the commenters' opinion, makes transitional assessments an option for States instead of a requirement. Two commenters expressed concerns that, because the regulatory provision only requires States to describe transitional assessments, it sends the message that States need not go through the approval process.

Discussion: Section 1111(b)(7) of Title I states that, if a State does not have final assessments that fully meet the statutory requirements, ''the State may propose to use a transitional set of yearly statewide assessments that will assess the performance of complex skills and challenging subject matter.'' The Secretary does not believe that use of the word ''may'' in this context means that transitional assessments are optional. Rather, the Secretary believes that the word ''may'' permits the use of transitional assessments while final assessments are being developed, rather than requiring final assessments immediately. Moreover, because transitional assessments are part of the State plan, they are subject to peer review and approval under section 1111(d) of Title I.

Changes: None.

Section 200.2 State Responsibilities for Developing Challenging Standards

Comment: One commenter suggested that the regulations and guidance need to clarify that a State may adopt or approve locally developed standards and assessments under the Goals 2000 process or another State process for use in the Title I program. Another commenter recommended that the Department clarify whether State standards and assessments must be uniform throughout the State for Title I accountability purposes. This commenter suggested that past experience with LEAs establishing high school graduation standards resulted in high-level proficiencies for affluent communities and low-level proficiencies for poor communities.

Discussion: Section 1111(b)(1)(B) of Title I and §§ 200.2(b) and 200.4(c) of the regulations make clear that, if a State has State content standards or State student performance standards and an aligned set of assessments for *all* students developed under Title III of the Goals 2000: Educate America Act or another process, the State must use those standards and assessments, modified, if necessary, to conform with the requirements of section 1111 of Title I, to carry out Part A. Guidance for Goals 2000 requires that participating States develop or adopt challenging content and performance standards. It does not require that there be a single set of content or performance standards that are applied uniformly to every LEA within the State. A State may choose to develop or adopt model standards or criteria against which locally developed standards would be measured and approved.

Changes: None.

Section 200.3 Requirements for Adequate Progress

Comment: One commenter suggested that the phrase ''except as provided in paragraph (c) of this section'' should be deleted from § 200.3(a) of the regulations, suggesting that it appears to require States to develop two different definitions of adequate yearly progress. The commenter argued that, while Congress intended for States to use different measures in transitional and final assessment periods to determine adequate yearly progress, Congress also intended that States develop one standard for determining adequate yearly progress regardless of the assessment period.

Discussion: The Secretary believes that § 200.3 (a) and (c) of the regulations accurately reflect the statute and is necessary to give each State the flexibility to develop and refine, over the next five years, its own approach for establishing high-quality assessments that will effectively assess learning. The definition of adequate yearly progress must be flexible to accommodate changes in State approaches to assessment. It does not make sense to require one standard for determining adequate progress when assessments used to measure that progress may be different during the transition period. The Secretary, however, does not expect States to establish lower expectations during the transitional period.

Changes: None.

Comment: One commenter suggested that references to adequate yearly progress in different regulatory sections are repetitive and could be confusing.

Discussion: State and local accountability for helping Title I children meet high standards is a central theme in the Title I statute. Adequate yearly progress plays a pivotal role in measuring accountability and it is part of several different statutory sections. The regulations clarify these statutory provisions, first with regard to the State plan and then in subsequent sections devoted to implementation. The Secretary believes that adequate yearly progress needs emphasis in the regulations to help maintain an overall focus on enabling children in Title I programs to meet the same high standards expected of all children.

Changes: None.

Comment: Two commenters argued that repetition of the statute regarding adequate yearly progress without additional explanation provides insufficient guidance to grantees.

Discussion: Section 200.3(b)(2) of the regulations provides that a State's determination of adequate yearly progress must be sufficiently rigorous to achieve the goal of helping all children served under Part A, particularly economically disadvantaged and LEP children, meet the State's proficient and advanced levels of performance within an appropriate timeframe. Each State has the flexibility to develop its own definition within its framework for standards and assessments. Standards and assessments will differ from State to State, along with definitions of adequate progress for each State's schools and LEAs. Some models and examples will be provided through policy guidance.

Changes: None.

Comment: One commenter suggested that adequate yearly progress be based on empirical data on or knowledge about growth in academic performance of schools and LEAs in the State in order to prevent States from arbitrarily using a benchmark.

Discussion: Section 200.3(b)(3) of the regulations requires that adequate yearly progress be defined in a manner that links progress primarily to performance on the State's assessment system under § 200.4, while permitting progress to be established in part through the use of other measures, such as dropout, retention, and attendance rates. The Secretary expects that a State, in developing its definition of adequate progress, would draw on knowledge and empirical data about the degree of progress that should be expected of effective schools.

Changes: None.

Comment: One commenter suggested that the regulations require SEAs and LEAs to make every effort to notify private schools about the SEA's definition of adequate yearly progress.

Discussion: The definition of adequate yearly progress that an SEA establishes will be the standard against which schools and LEAs will be measured as to whether they are enabling children to meet the State's challenging student performance standards. While private schools are not recipients of Title I funds, the Department will issue policy guidance that will, for the purpose of private school student Title I participants, address whether private school students served by Title I, but not private schools, are making adequate yearly progress toward meeting the standards.

Changes: None.

Comment: One commenter expressed concern regarding the statement in the preamble of the Notice of Proposed Rulemaking (NPRM) that the new Title I will shift from ''an evaluation of how individual students are performing to an evaluation of how well schools and LEAs are helping students meet the challenging standards'' since States will be assessing changes in the performance of different cohorts of students. The commenter argued that changes in test scores are likely to reflect differences in the groups of students instead of changes in school or LEA performance, particularly in poor urban districts with high rates of student mobility.

Discussion: The impact of the Title I program cannot be divorced from that of the regular program. This is particularly true as an increasing number of Title I schools develop schoolwide programs. Although the assessment systems operated by States and LEAs generally test only some grades, the Secretary believes that they will provide more revealing data than the current Chapter 1 testing system on the success of Title I schools and children served by Title I because they will be tied to high standards and will show how Title I schools are doing compared to other schools in the district and State. In addition, Chapter assessments, which used gains of individual students, rather than a specified level of expected achievement, often resulted in minimal expectations of gains being set for Chapter 1 children. While the children improved, they were still performing far below a level needed for successful completion of school and employment. Classroom teachers will continue—as they do now—to assess individual children to determine their performance and improvement on an ongoing basis.

Changes: None.

Comment: One commenter requested that the regulations allow a State to define adequate progress in terms of progress made over either a one- or two-year period for the purpose of meeting the requirements of Title I accountability.

Discussion: States have the discretion to define adequate yearly progress over a one- or two-year period as long as the definition is sufficiently rigorous to achieve the goal that all children served under Part A, particularly economically disadvantaged and LEP children, meet the State's proficient and advanced levels of performance within an appropriate timeframe.

Changes: None.

Section 200.4 State Responsibilities for Assessment

Comment: One commenter suggested that the regulations inform SEAs and LEAs of their responsibilities regarding the assessment of participating private school children and specify that the expenses of conducting the assessment are allowable costs under Title I.

Discussion: The assessment requirements in the statute apply to private school students as well as public school students who participate in Title I. The Department will clarify in guidance that Title I funds may be used to assess private school children if they would not otherwise be participating in the State assessment. However, if private school children, in general, are included in the State assessment, Title I funds may not be used to pay for the assessment of those private school children participating in Title I.

Changes: None.

Comment: Many comments were received regarding the issue on which the Secretary specifically invited comments in the NPRM: whether accountability under Title I should be based on all subject areas for which a State has developed or adopted standards and assessments for all children or whether assessments in mathematics and reading/language arts are sufficient for Title I accountability purposes as permitted in § 200.4(c)(1) of the regulations. Many commenters agreed with the regulations that accountability in math and reading/language arts was sufficient for Title I purposes. A number of other commenters, however, recommended that Title I schools be held accountable for all areas in which the State has developed standards and assessments in order to break the mold of Title I as a remedial reading and math program with lower expectations for the children served. A handful of commenters recommended a different resolution—that science be assessed in addition to reading and math to reflect the importance of that subject or that Title I accountability be based on those subject areas in which Title I services are provided.

Discussion: This issue continues to be one of the most difficult to resolve because each of the two major options has important advantages but also significant drawbacks. A major goal of the reauthorization is to redirect Title I from a low-level reading and math add-on program to a significant resource for high-poverty Title I schools to use to promote comprehensive schoolwide improvement in teaching and learning geared to the same challenging standards expected of all children. There is significant and legitimate concern that permitting Title I accountability to be limited to reading and math will stymie the shift toward comprehensive schoolwide reform, reinforce lower expectations for Title I schools, and send a message that other subjects are not important for children in high-poverty schools to learn. There is also the concern that this provision will lead States, LEAs, and schools to abrogate their responsibility for the performance of students served by Part A in all other subject areas besides reading and math. Extending Title I accountability to include all subjects in which a State has standards and assessments, including applying Title I assessment requirements to each of those subjects, however, also raises significant concerns about federal overreaching and the imposition of unwarranted and excessive burden. In addition, it risks creating additional disincentives to developing new State standards and limits the ability of States and LEAs to take advantage of innovations in performance assessments since, in the short run, many of those assessments will not be able to satisfy the Title I assessment requirements—at least in a timely and cost-efficient way.

Needing to give effect to the statutory language that a State must have

developed or adopted a set of assessments in at least mathematics and reading/language arts while not imposing additional requirements at the Federal level, the Secretary has retained the requirement that a State must use assessments that measure performance in math and reading/language arts to determine accountability under Part A. Nevertheless, the Secretary is concerned that Title I not continue to be viewed as solely a remedial program in math and reading. In addition, he wishes to afford appropriate flexibility to States as they begin to implement Goals 2000 plans. Therefore, the Secretary has revised § 200.4 to clarify that a State's assessments need not be focused solely on math and reading/language arts. Rather, a State may meet Title I's assessment requirements by developing or adopting assessments in other academic subjects as long as those assessments sufficiently measure performance in math and reading/language arts. For example, an assessment in an academic subject such as social studies may sufficiently measure performance in reading/language arts. Particularly at the secondary level, the Secretary believes it may be especially appropriate to measure performance in reading/language arts through assessments in content areas.

The Secretary emphasizes the importance of all children attaining high levels of performance in all core academic subjects. Limiting the focus of Title I accountability to math and reading/language arts in no way is intended to alter the overall responsibility of States, LEAs, and schools for the success of all students in the core academic subjects determined by the State. If a State has standards and assessments for all students in subjects beyond math and reading/language arts, the regulations do not preclude a State from including, for accountability purposes, additional subject areas, and the Secretary encourages them to do so.

Changes: Section 200.4(a)(1) of the regulations has been revised to clarify that a State may satisfy the requirement to develop or adopt a set of high-quality yearly assessments, including assessments that measure performance in at least mathematics and reading/language arts if the State has developed or adopted a set of high-quality yearly student assessments in other academic subjects that measure the performance in mathematics and reading/language arts. Likewise, § 200.4(e)(1)(i) has been revised to clarify that a State's transitional set of yearly statewide assessments may be assessments in academic subjects other than mathematics and reading/language arts that measure performance in mathematics and reading/language arts. References to these clarifications are reflected in § 200.1 regarding State plan requirements and throughout § 200.4 in provisions related to the development or adoption of State assessments.

Comment: A number of commenters proposed that some or all of the criteria applicable to the final assessments under Title I be applied to the transitional assessments. The commenters were concerned that, without additional transitional requirements, States would be relieved of accountability during the entire reauthorization period. A number of commenters recommended that the regulations require all, or at least one, transitional assessment to be valid and reliable and consistent with existing professional and technical standards. A number of commenters also proposed that disaggregated data be required during the transition period, particularly for LEP children and poor children and for schoolwide programs. Other transitional assessment criteria that commenters recommended include; that all students, including LEP, minority, and poor students, be included in transitional assessments; that transitional assessments be aligned with State standards once these standards are developed; that LEP criteria for assessments be provided; that there be individual student and interpretive reports; and that parents receive the achievement information they need to be involved in the education of their children. In addition, three commenters supported applying all of the requirements of the final assessments to the interim assessments, although one would be willing to exempt specific technical requirements that need to be field tested, while the two others would only grant narrow exceptions after careful examination.

Discussion: Section 1111(a)(3)(7) of Title I allows States developing final assessments to use a transitional set of yearly statewide assessments that assesses the performance of complex skills and challenging subject matter. The Act itself contains no other criteria for these assessments and § 200.4(e) of the regulations only clarifies that these assessments must be at least in mathematics and reading/language arts and be administered during the grade spans required of the final assessments. Neither the statute nor the legislative history supports the application of other requirements on transitional assessments. In fact, the Secretary believes that requiring transitional assessments to meet a host of requirements, particularly those relating to validity, reliability, and disaggregation, may end up frustrating Title I's longer-term goal of promoting high-quality innovative assessments aligned with challenging standards. Developing new, high-quality assessments that conform with these requirements will require time—time that the transition period is precisely designed to provide. If the same criteria are applied to transitional assessments as to the final assessments, this purpose would be nullified and States, in effect, may have to develop two systems.

Title I and the regulations, however, clearly intend that all children within the grades tested during the transition period participate in the assessment. Moreover, section 1111(b)(7)(B) of Title I and § 200.3(c) make clear that LEAs and schools must be identified for improvement during the transitional period based on accurate information about the academic progress of each such local education agency and school.

Changes: Section 200.4(e)(1)(iii) has been added to clarify that transitional assessments must include all students in the grades assessed.

Comment: One commenter recommended that the reliability and validity of assessments used to evaluate Title I programs be established and described for each specific purpose or use of the scores. Another commenter emphasized the importance of conducting and reporting on validation studies to ensure that accountability decisions are not based on flawed results, and another suggested that the Department make clear that following a particular validation process is not required.

Discussion: Section 200.4(b)(3)(i) of the regulations requires that each State's assessments be used for purposes for which they are valid and reliable and to be consistent with relevant, nationally recognized professional and technical standards for those assessments. The Secretary believes that this provision adequately addresses the commenters' concerns yet does not require a particular validation process.

Changes: None.

Comment: One commenter expressed concern that the individual, group, total school, and district reports required by the regulations will be subject to error from several sources, including measurement and sampling error: many schools will have too few students in some of the groups for which disaggregated reporting is required to provide reliable estimates of group performance (let alone reliable estimates of change). The requirements also overlook that some State assessment

programs are designed to provide school-level rather than student-level estimates of performance. At a minimum, the commenter recommends: adding language in § 200.4(b)(9) requiring that individual student reports include estimates of measurement error for the scores and any limitations of the results to permit accurate interpretation; adding language in § 200.4(b)(10) that reports of disaggregated data should be modified when the results would be unreliable or invalid due to inadequate numbers of students in the categories; or permitting a school to report annual results in a three-year rolling average to reflect that estimates from individual years contain too much error to be interpreted in isolation.

Discussion: Section 200.5(a)(2)(iii)(C) of the regulations clarifies that disaggregated data should be reported to the public only when those data would be statistically sound. It is appropriate for a State to have considerable flexibility in determining the content of its assessment reports so long as those reports conform with the requirements of the law.

Changes: None.

Comment: One commenter described some of the difficulties involved in disaggregating data by economically disadvantaged children: the definition is subject to various interpretations; schools currently do not collect these data in disaggregated form; collection of such data would be very difficult; and current USDA guidelines limit the use of individual student eligibility free and reduced price lunch data to USDA purposes only. Another commenter, reinforcing this position, suggested that the regulations provide as much flexibility as possible regarding disaggregation of data by poverty status.

Discussion: The Secretary recognizes that there are difficulties involved in complying with this requirement. However, the need to determine how well Title I is assisting poor children to meet challenging standards is acute.

Changes: None.

Comment: One commenter suggested deleting the phrase ''in the grades being assessed'' from § 200.4(b)(7)(i) of the regulations on the grounds that it may cause unnecessary problems for students who are placed in ''ungraded'' classes, or who have disabilities and are not in the age-appropriate grade. According to the commenter, this phrase is not necessary to clarify that students in all grades need not be assessed and might create perverse incentives for schools wanting to exclude students from assessments. Another commenter suggested that § 200.4(b)(7)(i) of the regulations be modified to read ''participation in the assessment of all students, including students served under this subpart, in the grades being assessed.''

Discussion: Inclusion of the phrase ''in the grades being assessed'' in § 200.4(b)(7)(i) of the regulations is necessary to clarify that assessments used for Title I purposes do not have to assess all students in a school or all students served by Title I, but only those students in the specific grades being assessed. Within the grades being assessed, however, students being served under Title I must be included in the assessment.

Changes: None.

Comment: One commenter stated that the requirement in § 200.4(b) of the regulations that the ''same assessments be used to measure the performance of all children'' should be relaxed to permit appropriate modifications for children with diverse learning needs. The commenter recommended regulatory language stating that ''reasonable adaptations may require modifications in item format, item content, test structure, administrative procedures and time limits that result in a different test form and/or procedure.'' The commenter would also require those modifications to be described and the validity and reliability of those assessments estimated and reported. Another commenter suggested that the regulations state that all students, including those who are limited English proficient, have a disability, or otherwise might not always be included in State and local assessment systems, be included under Title I assessment requirements, with appropriate modifications.

Discussion: Section 1111(b)(3)(A) of Title I and § 200.4(b)(1) of the regulations make clear that assessments used for Title I purposes must be the same assessments used to measure the performance of all children, if the State measures the performance of all children. These provisions remedy the situation under Chapter 1, in which a separate testing system was often used to assess only Chapter 1 participants. Section 200.4(b)(7)(i) of the regulations makes clear that State assessments must provide for the participation of *all* students in the grades being assessed. Section 200.4(b)(7)(ii) further clarifies that *all* students includes students with diverse learning needs. However, it also makes clear that reasonable adaptations and accommodations must be made for students with diverse learning needs so that the State's assessment measures the achievement of those students relative to the State's content and performance standards. Moreover, under § 200.4(b)(7)(iii), children with limited English proficiency must be assessed, to the extent practicable, in the language and form most likely to yield accurate and reliable information on what those students know and can do to determine the students' mastery of skills in subjects other than English. The Secretary believes these provisions effectively address the commenters' concerns.

Changes: None.

Comment: Several commenters focused specifically on § 200.4(b)(7)(iii) concerning the assessment of limited English proficient children. One commenter recommended modifying this section to make clear that the State must make every effort to use or develop linguistically accessible assessment measures and develop appropriate modifications to test formats and administration procedures for LEP students assessed in English. Another commenter recommended deleting ''to the extent practicable'' from § 200.4(b)(7)(iii)(A) to ensure the assessment of all students without regard to primary language.

Discussion: The Secretary believes that § 200.4(b)(7) of the regulations, which replicates, by and large, the language in section 1111(b)(3)(F) of Title I is clear in its requirements that all students participate in the assessments, that reasonable adaptations and accommodations be provided where necessary, and that children with limited English proficiency be assessed, to the extent practicable, in the language and form most likely to yield accurate and reliable information on what those students know and can do to determine the students' mastery of skills in subjects other than English.

Changes: None.

Comment: Several commenters expressed concerns about the addition of the phrase ''to meet this requirement'' in § 200.4(b)(7)(iii)(B) of the regulations. To some, it suggests that States can meet the requirement that they include LEP students in their assessment by making every effort to use linguistically accessible assessment measures even though these are two distinct and important provisions. To another commenter, the provision gives the impression that assessment of LEP students is required only when assessments are available in the students' native languages. Recommendations included either deleting the phrase, or substituting the words ''in meeting'' for ''to meet'' in § 200.4(b)(7)(iii)(B).

Discussion: The Secretary agrees with the commenter that, as proposed, the provision did not make clear the

requirement for including LEP students in the State assessments. In meeting this requirement, States must make every effort to develop linguistically accessible assessments. However, even without such assessments, LEP students must be included in the State's assessments.

Changes: Section 200.4(b)(7)(iii)(B) has been modified by deleting the phrase ''to meet this requirement'' and inserting ''in meeting this requirement.''

Comment: One commenter suggested that clarification is needed in § 200.4(b)(8) of the regulations regarding determining of those children from mobile families who have attended schools in the LEA for ''a full academic year.'' Specifically, in districts operating year-round programs, the commenter suggested that students who have attended school in the district for the amount of time required of any particular student must be included in determining the progress of the LEA.

Discussion: The Secretary agrees that students from mobile families must be included in determining an LEA's progress if they have attended school in that LEA for the period of time necessary to meet the State's annual requirement for compulsory education.

Changes: None.

Comment: One commenter recommended that the regulations expressly state that group-administered, norm-referenced tests below grade 4 are inappropriate. The same commenter recommended that LEAs, not SEAs, select the particular approaches to assess children's school performance during the first 3–4 years of elementary school.

Discussion: Under Title I, States are provided with the responsibility of developing assessments aligned with State-developed standards. LEAs may also implement any additional assessments. The Secretary, therefore, believes it is inappropriate to prescribe the type of assessments that SEAs and LEAs should use.

Changes: None.

Section 200.5 Requirements for school improvement

Comment: One commenter requested that §§ 200.5 and 200.6 of the regulations be expanded to cover the numerous interrelated and complex provisions of Title I on which no regulations for program improvement have been included.

Discussion: The Secretary is committed to issuing regulations only where absolutely necessary and, when regulating, to promoting flexible approaches to meeting the requirements of the law. As a result, the Secretary has not expanded the provisions on school improvement through regulations. The Secretary intends, however, to issue nonregulatory guidance on these provisions, including examples to illustrate possible approaches to school improvement.

Changes: None.

Comment: One commenter suggested that, when an LEA reviews a targeted assistance school to determine if the school has made adequate progress, the State should have the flexibility to decide whether to include only students served by Title I or all students who participate in the assessment.

Discussion: Section 1116(c)(1)(B)(ii) of Title I states that an LEA shall identify for school improvement any school served under this part that has not made adequate progress as defined in the State's plan for two consecutive school years, except that, in the case of a targeted assistance school, such school may be reviewed on the progress of only those students that have been or are served under this part. Additionally, section 1116(d)(3)(A)(i) of Title I provides a State some flexibility in reviewing the progress of an LEA. In a State's review of an LEA, schools served by the LEA that are operating targeted assistance programs may be reviewed on the basis of the progress of only those students served under Part A.

Changes: None.

Comment: One commenter suggested that language be added to § 200.5(a)(2) to include parental involvement in the annual review of the progress of each school for school improvement since parental involvement is a key theme in Title I of the Act.

Discussion: The Secretary strongly supports parental involvement efforts and participation by parents in their children's learning process and believes that such participation is crucial to the children's success in school. However, the progress of a school is measured on the basis of student achievement, not the process to elicit that achievement. Section 1118 of Title I contains comprehensive parental involvement requirements, including a requirement for the yearly review of the effectiveness of the parental involvement policy in increasing the participation of parents.

Changes: None.

Comment: One commenter supported the Secretary's position in § 200.5(a)(2)(iii)(c) that in conducting its annual review, an LEA must report disaggregated data to the public only when those data are statistically sound. This commenter explained that reporting data that are not statistically sound will mislead policymakers and the public regarding how well schools are performing.

Discussion: The Secretary supports reporting data to teachers and other staff, parents, students, and the community annually so that this information may be used to determine the effectiveness of the program and for school improvement purposes. However, informed decisions can be made only if the data are accurate and statistically sound.

Changes: None.

Schoolwide Programs

Section 200.8 Schoolwide Program Requirements

Comment: Some commenters recommended that § 200.8(a)(1) of the regulations be changed to indicate that the decision to operate a schoolwide program is an LEA decision or an LEA decision after consultation with school-level staff as opposed to a school decision after consultation with the LEA. According to one of the commenters, this change would respect the role of the LEA and, at the same time, reinforce the concept that schoolwide programs should be undertaken in a building on a voluntary basis.

Discussion: Both section 1114 of Title I on schoolwide programs and section 1115 of Title I on targeted assistance schools emphasize greater decisionmaking authority at the school level so that schools, in consultation with their LEA, determine how to use their Title I funds in ways that best meet the needs of their students. Section 1114 contains many provisions addressing a school's responsibility for conducting a schoolwide program should the school choose to operate one. By emphasizing that an eligible school makes the decision to operate a schoolwide program, in consultation with its LEA, § 200.8(a)(1) recognizes that schoolwide programs will be successful only when the school community is fully behind that decision and that accountability at the school level must be coupled with decisionmaking authority.

Changes: None.

Comment: One commenter requested that the following language be added to § 200.8(a)(2)(ii): ''If a district selects a provider of School Support from another entity outside of the statewide system, it must be subject to the State Validation System before the SWP plan is approved by the local board.''

Discussion: A State may choose to include, as part of its State support system addressed in section 1117 of Title I, provisions allowing its LEAs to select technical assistance providers

other than those provided by the State. Because the responsibility is placed upon a State to design its system of support, this is an individual State decision.

Changes: None.

Comment: Numerous comments were received on § 200.8(c) of the regulations combining other Federal education program funds to support schoolwide programs and exempting those funds from their specific program requirements. Two commenters viewed the proposed regulations as going beyond what Congress authorized and did not believe that the ability to combine funds exempts schools from other Federal education laws and regulations. Several commenters asked that the authority to combine funds not extend to Title VII bilingual programs. They also stated that § 200.8(c)(ii)(B), which requires only that the intent and purposes of Federal education programs whose funds are combined be met, is too vague and will allow LEAs to evade the intent of Congress. Some commenters suggested deleting § 200.8(c)(3)(i)(A) because they believe that provision misconstrues the statute by exempting ''programs'' as opposed to the statutory term ''provisions.'' Other commenters suggested deleting all references to ''and any other Federal program included under (c) in this section.'' One commenter expressed concern that protection of services children receive will be eliminated, especially if parents are not specifically informed about funding and program design.

Discussion: One of the most promising changes in the recent reauthorization of Title I is the expansion of schoolwide programs to include other Federal programs. A schoolwide program permits a school to use funds under Part A of Title I to upgrade the entire educational program of the school and to raise academic achievement for all children in the school, in contrast to categorical programs in which Federal funds may generally be used only for supplementary educational services for specific target populations.

The Secretary strongly believes that schoolwide programs hold the greatest promise for raising the achievement of *all* children in high-poverty schools. He also believes the success of schoolwide programs depends on the ability of the schools to combine other Federal education program funds along with Part A funds and State and local funds to support their overall instructional programs. This authority affords a schoolwide program school significant flexibility to serve more effectively all children in the school and their families through comprehensive reforms of the entire instructional program, rather than by providing separate services to specific target populations.

The Secretary emphasizes that a school with a schoolwide program must address the needs of *all* children in the school, particularly the needs of children who are members of the target population of any other Federal education program that is included in the schoolwide program and that accountability is based on how well children in the target populations perform with respect to State standards. The Secretary has not included additional provisions in the regulations because he does not want to impede a schoolwide program school from serving all children through comprehensive reforms of its entire instructional program.

Changes: None.

Comment: One commenter stated that § 200.8(c)(3)(ii)(A)(*8*) and (f)(1)(iii) and (2) of the regulations concerning application of the supplement, not supplant requirement in schoolwide program schools are contradictory and confusing.

Discussion: Consistent with section 1114(a)(4)(B) of Title I, § 200.8(c)(3)(ii)(A)(*8*) of the regulations does not relieve an LEA or school operating a schoolwide program from applicable supplement, not supplant requirements. On the other hand, consistent with section 1114(a)(3), § 200.8(f)(1)(iii) and (2) exempts a schoolwide program school from providing supplemental services to eligible children, although it requires the school to demonstrate that Part A funds and any other Federal education funds that are combined for use in a schoolwide program supplement the total amount of funds that would, in the absence of such funds, be made available to the school from non-Federal sources. Thus, the regulations do not contradict one another. Rather, paragraph (f) clarifies paragraph (c): schoolwide program schools must comply with the modified supplement, not supplant requirements in section 1114(a)(3) of Title I and § 200.8 (f)(1)(iii) and (2) of the regulations.

Changes: None.

Comment: One commenter suggested that § 200.8(e)(1)(iv)(A)(*2*) of the regulations conform to the statutory requirement for the collection of disaggregated achievement and assessment results, which the commenter argues is required during the transitional assessment period.

Discussion: Section 1111(b)(3)(I) of Title I requires that final assessment systems enable assessment results to be disaggregated. Section 1111(b)(7), which authorizes transitional assessments, does not include the requirement for disaggregation. Therefore, disaggregating assessment data for schoolwide programs during the transitional assessment period is not required by the statute. Moreover, the Secretary believes that requiring disaggregation during the transition period would frustrate Title I's long-term goal of promoting high-quality, innovative assessments aligned with challenging standards. If there are data that can be disaggregated in a schoolwide program, an LEA may certainly disaggregate that data during the transitional assessment period. Furthermore, the Secretary encourages LEAs and schools to use information available from other sources such as teacher-made assessments to determine the progress of intended beneficiaries in the programs included in the schoolwide program.

Changes: None.

Comment: One commenter requested that language be added to § 200.8(d)(8)(C) of the regulations permitting Title I funds to be used to conduct parent-teacher conferences in parents' native language in order to help LEP parents be more involved.

Discussion: The use of Title I funds to conduct parent-teacher conferences, including in a parent's native language, is an allowable and appropriate use of Title I funds. Given that many funding sources may be combined to conduct schoolwide programs, any of the funding sources, including Title I, could provide such language-related services. The Department is planning to issue guidance on schoolwide programs that covers additional issues, including this one. Furthermore, the Department is consulting with many groups with knowledge on and experience with issues concerning the specific needs of children and their parents with limited-English proficiency and will produce specific guidance on activities related to working with LEP children and their families.

Changes: None.

Comment: One commenter requested that § 200.8(c)(3)(ii)(B)(*1*) of the regulations concerning a special rule for migratory children in schoolwide programs be expanded to include students from homeless, highly mobile, and isolated families.

Discussion: Part C of Title I includes a specific provision with respect to migratory children in schoolwide programs, which is reflected in the regulations. There is no authority to

expand that provision to cover other target populations.

Changes: None.

Comment: One commenter requested that § 200.8(c)(3)(ii)(B)(*1*)(*i*) of the regulations be revised to refer to parents of migratory children ''and/or'' organizations representing those parents.

Discussion: The Secretary agrees that an LEA may consult with both parents of migratory children and organizations representing those parents. These parties are not mutually exclusive.

Changes: The Secretary has revised § 200.8(c)(3)(ii)(B)(*1*)(*i*) to include ''or both.''

Comment: One commenter recommended that § 200.8(d)(8)(ii)(A) and (B) of the regulations be deleted, arguing that the language on Individualized Education Programs (IEP) is an unnecessary clarification that unfairly targets an effective strategy that helps children with special needs improve their academic achievement.

Discussion: This provision is included to prevent misinterpretation of the statutory provision that requires a schoolwide program to discuss with parents what the school will do to help students meet the standards and identify additional assistance that may be available. Section 200.8(d)(8)(ii)(A) of the regulations makes clear the statute does not require that IEPs, like those required under the Individuals with Disabilities Education Act, be developed for children not served in special education. This clarification does not, however, prohibit IEPs from being developed should a schoolwide program school elect to do so.

Changes: None.

Comment: One commenter suggested that the Secretary focus on curriculum and instruction in its guidance to States, school districts, and schools regarding the development of schoolwide plans. The commenter also suggested that schools be required to explain how and why they designed their instructional program and to describe any evidence that their approach has been researched and evaluated in peer-reviewed publications. In addition, the commenter suggested that the Secretary ask schools to explain how their schoolwide programs will help students master the knowledge and skills outlined in the State content standards. Further, the commenter suggested that the Secretary urge schools to include a timetable in their schoolwide plans showing what changes will take place immediately and what other changes will follow.

Discussion: Section 1114(b)(1) of Title I contains the components required of a schoolwide program, including, among other things, schoolwide reform strategies that provide opportunities for all children to meet the State's proficient and advanced levels of student performance, that are based on effective means of improving the achievement of children, and that use effective instructional strategies. Further, section 1114(b)(2) provides that a school operating a schoolwide program must develop a comprehensive plan for reforming the school that incorporates the components required in section 1114(b)(1). Therefore, the statute already sufficiently ensures that the schoolwide program plan include information on those areas critical to the improvement of teaching and learning.

Changes: None.

Participation of Eligible Children in Private Schools

Section 200.10 Responsibilities for Providing Services to Children in Private Schools

Comment: Two commenters suggested that § 200.10(a) of the regulations be augmented to clarify that timely and meaningful consultation must occur before decisions are made that affect the opportunities of participating private school children and that a unilateral offer of services would not suffice.

Discussion: Section 1120(a) of Title I requires an LEA to provide equitable services to eligible private school children *after* timely meaningful consultation with private school officials. Section 1120(b) further elaborates on what constitutes timely and meaningful consultation. Paragraph (b)(2) requires consultation to occur ''before the [LEA] makes any decision that affects the opportunities of eligible private school children to participate'' in Part A programs. These statutory provisions clearly preclude an LEA from making a unilateral offer of services or consulting after services are already being provided, and no further regulations are needed.

Changes: None.

Comment: Several commenters argued that the definition of eligible students in section 1115 of Title I does not require eligible Title I children attending private schools to reside in a participating attendance area as stated in § 200.10(b)(1) of the regulations. They argued that the poverty of a private school is reflective of a larger area such as an entire LEA and, therefore, the attendance areas of the public school system are not relevant.

Discussion: Section 1113(a) of Title I defines a public school attendance area as the geographic area in which children who are normally served by the school reside. To be eligible for Title I services, a school attendance area must have a higher percentage of poverty than the LEA as a whole. The degree of poverty in a private school is irrelevant because private schools do not participate in Title I. Rather, private school children are eligible because they reside in a public school attendance area that is participating in Title I; thus, they would have been eligible for services had they attended the public school. In essence, Title I puts private school children in the same place they would have been in had they attended a public school.

Changes: None.

Section 200.11 Factors for Determining Equitable Participation of Children in Private Schools

Comment: Several commenters commented on § 200.11(a)(2)(ii) (A)–(B) of the regulations, which provides two options to an LEA for determining which eligible private school children to serve. One commenter suggested that a combination of the options should be allowed as a third option. Another commenter recommended that paragraph (A), which permits the pooling of funds generated by poor private school children in all participating areas, be deleted because it provides greater flexibility in serving private school children than exists for serving public school children. Other commenters recommended that paragraph (B) be deleted, arguing that it is administratively burdensome and appears to directly benefit private schools.

Discussion: The regulations provide two options for utilizing the funds allocated on the basis of the number of low-income children who reside in participating Title I attendance area. In consultation with private school officials, an LEA may select one option or combine the options to best serve eligible private school children. Thus, an LEA does not need to select the option in paragraph (B) if the LEA believes it is administratively burdensome. The Secretary does not believe the option for pooling funds in paragraph (A) favors private school children. Rather, it adds needed flexibility, particularly because the number of poor children who reside in participating public school attendance areas and attend a particular private school may be so small that the funds those children generate are not commensurate with the educational needs of eligible children in that school.

Changes: None.

Comment: One commenter suggested that § 200.11(b)(2)(iii) of the regulations

be modified to require that private school children be provided with an opportunity to participate in Title I in a manner that addresses the particular needs of the private school children.

Discussion: Section 1120 of Title I clearly provides private school children an opportunity to participate in Title I in a way that addresses their particular educational needs. It requires that equitable services be provided and requires an LEA to consult with private school officials about how private school children's needs will be identified and what services will be provided. Moreover, because there is no longer a districtwide needs assessment, the needs of private school children can be determined independently from the needs of public school children.

Changes: None.

Section 200.13 Requirements Concerning Property, Equipment, and Supplies for the Benefit of Private School Children

Comment: Several commenters recommended that § 200.13(d) of the regulations be revised to afford LEAs discretion in deciding whether to remove equipment and materials no longer needed to provide services to private school children if there is the possibility that the program would be resumed in a subsequent year. The commenters explained that new zoning ordinances in many districts make it very expensive, once portable units, for example, are removed, to resituate the units.

Discussion: The Secretary recognizes that, under the new law, services to eligible private school children may differ from those provided under Chapter 1. The Secretary has attempted in § 200.28 of the regulations to provide maximum flexibility to ease the transition to the new law. Consistent with that flexibility, however, if equipment is no longer needed to provide equitable services to private school children, it must be removed as required in § 200.13(d).

Changes: None.

Capital Expenses

Section 200.16 Payments to LEAs for Capital Expenses

Comment: Two commenters recommended amending § 200.16(a)(1)(i)(B) of the regulations to also allow capital expenses to pay for costs that would be incurred to improve the quality of services provided to private school students.

Discussion: Capital expenses funds may pay the costs of noninstructional goods and services needed to improve the quality of equitable services provided to private school children. The Secretary did not amend the regulations because these costs would be covered under § 200.16(a)(1)(i)(A)—that is, capital expenses an LEA ''is currently incurring'' to provide equitable services.

Changes: None.

Comment: One commenter suggested that § 200.16(a)(1)(ii) of the regulations be revised to allow an LEA to apply for a payment to cover capital expenses it incurred in prior years for which it has not been reimbursed ''only'' if the LEA demonstrates that its current needs for capital expenses have been met.

Discussion: The Secretary believes that the regulatory language in § 200.16(a)(1)(ii) clearly does not permit payments for previously incurred capital expenses if the LEA cannot demonstrate that its current needs for capital expenses have been met.

Changes: None.

Section 200.17 Use of LEA Payments for Capital Expenses

Comment: One commenter supported the use of capital expenses for reimbursement of costs in prior years but suggested that such reimbursement not be contingent upon approval by the SEA.

Discussion: Section 200.16(a)(1)(ii) of the regulations makes clear that an LEA may apply to the SEA for capital expense funds to cover expenses it incurred in prior years only if the LEA has demonstrated that its current needs for capital expenses have been met. Section 200.17 reflects this provision.

Changes: None.

Procedures for the Within-State Allocation of LEA Program Funds

Section 200.20 Allocation of Funds to LEAs

Comment: One commenter asked why Sections 1124(a)(2) and 1125(d) of Title I and § 200.20(b)(2)(ii)(B) of the regulations concerning direct allocations to LEAs require the SEA to establish appeal procedures for an LEA dissatisfied with the determination by the SEA when section 14401(c) of the ESEA prohibits the Secretary from waiving any statutory or regulatory requirement relating to the allocations or distribution of funds to States, LEAs, or other recipients of funds under the ESEA.

Discussion: Section 200.20(b)(2)(ii)(B) of the regulations follows the statute, which requires that a State applying for authorization to allocate funds directly to LEAs without regard to counties assure that its SEA has established procedures through which LEAs dissatisfied with the SEA's determination may appeal directly to the Secretary. In reviewing an LEA's appeal, the Secretary would consider whether the SEA's allocation procedures in general comply with the statute and regulations. The Secretary could not waive any of the statutory or regulatory requirements related to allocating funds, however.

Changes: None.

Comment: One commenter requested clarification of the provision in § 200.20(c) of the regulations concerning LEAs that contain two or more counties in their entirety. In the case of New York City, for example, the SEA is required to allocate funds to each county within the city school system as if each county were a separate LEA. The commenter asked whether the LEA or SEA could adjust individual county allocations within New York City to account for poor children who live in one county but attend school in another county. The commenter believes that the Title I allocation procedures would be more equitable if adjustments could be made to county allocations in cases where poor children who live in one county attend school in another county, even though those poor children are in the same LEA.

Discussion: The situation described by the commenter is similar to that provided for in section 1126(b) of Title I. Section 1126(b) allows an SEA, in cases where an LEA provides free public education for children who reside in the school district of another LEA, to adjust the amount of grants among the affected LEAs. Because the statute requires an SEA to treat the individual counties within a single school district as separate LEAs for allocation purposes, section 1126(b) authorizes an SEA to adjust the counties' amounts because they are treated as LEAs. Therefore, the SEA may adjust amounts made available to the counties within a single LEA to account for poor children who live in one county but attend school in another county.

Changes: None.

Comment: Because of the disruption the ''one LEA with two or more counties'' provision in § 200.20(c) of the regulations will cause the New York City school system, one commenter recommended that the regulations allow such LEAs to use current Chapter 1 allocation procedures for two more years in order to minimize disruption to ongoing projects and make the transition to the new law smoother.

Discussion: Section 3(a)(1)(A) of the IASA provides that Title I shall take effect on July 1, 1995. The Secretary

does not have authority to delay this effective date.

Changes: None.

Section 200.25 Applicable Hold-Harmless Provisions

Comment: One commenter opposed the provision in § 200.25(c) of the regulations that requires an LEA to be eligible for basic, concentration, or targeted grants in order for the respective hold-harmless provisions to apply. The commenter believes this provision penalizes poor students with educational needs who live in wealthy districts.

Discussion: Sections 1124 (basic grants), 1124A (concentration grants), and 1125 (targeted grants) of Title I all contain requirements limiting the eligibility of certain LEAs to receive grants under those sections. The hold-harmless provisions in section 1122(c) of Title I apply to ''the amount made available to each local educational agency'' under sections 1124, 1124A, and 1125. If an LEA is not eligible, no funds would be ''made available'' to it and, thus, the hold-harmless protection would not apply. These sections help implement the statute's purpose to target funds more effectively on LEAs with the highest concentrations of poverty and are supported by research findings that show children from low-income families attending schools in relatively wealthy school districts tend on average to do better academically than similar children attending schools in school districts with high concentrations of poverty.

Changes: None

Procedures for the Within-District Allocation of LEA Program Funds

Section 200.27 Reservation of Funds by an LEA

Comment: One commenter asked for clarification about how the reservation of funds provision in § 200.27 of the regulations works with regard to calculating 125 percent of an LEA's allocation per poor child and how this provision affects an LEA that serves only attendance areas or schools with poverty rates of 35 percent or more.

Discussion: Section 1113(c)(2)(A) of Title I requires that, in allocating funds to eligible attendance areas or schools, an LEA provide an amount per poor child for each area or school that is at least 125 percent of the amount per poor child that the LEA received under Part A of Title I. Thus, an LEA must calculate 125 percent of its allocation per poor child based on its total allocation before reserving any funds. An LEA that serves only attendance areas or schools with poverty rates of 35 percent or more is not subject to this requirement.

Changes: A change has been made. The Secretary has amended § 200.27(b)(1) of the regulations to make clear that an LEA subject to the 125 percent rule must calculate its minimum per pupil allocation before the LEA reserves any funds.

Comment: One commenter believed the reference to capital expenses in § 200.27(c) of the regulations is incorrect because it is a separate Title I program that the SEA subgrants to LEAs. Several other commenters recommended that a separate provision be included for reserving funds for capital expenses.

Discussion: Although capital expenses is a separate Title I program, LEAs must apply to the SEA for these funds. There is no guarantee an LEA that applies will receive capital expense funds or that the amount received will be enough to cover all capital expense costs associated with implementing alternative delivery systems needed to serve private school students and comply with the requirements of *Aguilar* v. *Felton*. Thus, an LEA may still need to reserve administrative funds for the costs of noninstructional goods and services incurred because of the *Felton* decision.

Change: A change has been made. The Secretary has added language in § 200.27(c) of the regulations to make clear that an LEA may reserve off the top of its Part A allocation funds necessary to pay those capital expenses not reimbursed under § 200.16.

Section 200.28 Allocation of Funds to School Attendance Areas and Schools

Comment: Several commenters stated that requirements to allocate funds to schools based on poverty rather than educational need undermine the original purpose of Title I by making it a poverty program rather than an educational program. The commenters argued that basing Title I allocations on the number of poor children residing in an eligible school attendance area adversely affects the number of educationally needy public and private school students who can participate.

Discussion: Section 1113(c) of Title I requires an LEA to allocate funds to participating attendance areas and schools based on the number of children from low-income families. Congress enacted this provision to target funds on areas with the highest concentrations of poverty, recognizing the close relation between high concentrations of poverty and low academic achievement and realizing that successful schools have been penalized in the past by losing Title I funds because their children made academic gains. Even though funds are allocated to participating areas and schools on the basis of poverty, however, educationally needy children in those schools do not need to be poor to receive services. Title I continues to be an education program.

Changes: None

Comment: One commenter stated that the Secretary should not regulate how LEAs distribute funds to schools with poverty rates of at least 35 percent. According to the commenter, the decision on how to allocate funds in such cases should be an LEA decision; regulations in this area represent a Federal intrusion into local school decisionmaking.

Discussion: LEAs that serve only schools with poverty rates of 35 percent or more do, in fact, have more flexibility in allocating funds than other LEAs. Nevertheless, the statute does place certain requirements concerning the allocation of funds on all LEAs. Section 1113(a) of Title I requires that an LEA with more than 1,000 students rank its school attendance areas in order of poverty based on the percentage of children from low-income families in each area. Section 1113(c) requires an LEA to allocate funds to eligible school attendance areas or schools in rank order based on the number of children from low-income families. The Secretary believes that regulations are needed to clarify that an LEA serving only school attendance areas or schools with poverty rates of 35 percent or more has the flexibility to use an amount per poor child that the LEA deems appropriate and is not required to allocate an amount based on 125 percent of the LEA's allocation per poor child. However, for an LEA that serves any school with a poverty level under 35 percent, this provision applies to all its schools. The regulations further clarify that an LEA is not required to allocate the same amount per poor child to each participating school attendance area or school, provided that the LEA allocates higher amounts per poor child to areas or schools with higher concentrations of poverty than to areas or schools with lower concentrations of poverty.

Changes: None.

Comment: One commenter raised the issue that schools with similar allocations may need to spend different amounts because of variations in salaries and benefits of Title I staff. The commenter suggested that the regulations be modified to allow for the use of a pupil-teacher ratio instead of a funding ratio or to allow a 15 to 20

percent leeway among schools in the per-pupil allocation.

Discussion: Section 1113(c) of Title I requires that Part A funds be allocated to school attendance areas and schools based on the number of children from low-income families in each area or school. The provision assumes, for example, that two schools with the same number of poor children need similar amounts of funds to provide comparable education programs to participating children. The Secretary recognizes that an inequity may occur, however, if schools with similar allocations offering similar instructional programs need to spend different amounts due the salary and fringe benefit costs of the staff providing the instruction. To address this situation, the Secretary has issued guidance that allows an LEA to consider variations in personnel costs, such as seniority pay differentials or fringe benefits differentials, as LEA-wide administrative costs, rather than as part of the funds allocated to school attendance areas or schools. The LEA would pay the differential salary and fringe benefit costs from its administrative funds taken off the top of the LEA's Part A allocation. This policy would have to be applied consistently to staff serving both public and private school children throughout the LEA.

Changes. None.

Comment: One commenter noted that § 200.28 of the regulations does not specifically address the issue of variations in per-pupil amounts by grade spans.

Discussion: The Secretary has clarified this issue in guidance. An LEA opting to serve schools below 75 percent poverty using grade span groupings may determine different amounts per poor child for different grade spans as long as those amounts do not exceed the amount allocated to any area or school above 75 percent poverty. Amounts per poor child within grade spans may also vary as long as the LEA allocates higher amounts per poor child to areas or schools with higher poverty rates than it allocates to areas or schools with lower poverty rates.

Changes: None.

Comment: For LEAs that select eligible school attendance areas according to grade spans, a commenter recommended that the poverty percentage to determine eligibility be based on the districtwide average for the grade span rather than the overall districtwide poverty percentage.

Discussion: Section 1113(a)(4) of Title I allows an LEA, after ranking eligible attendance areas or schools above 75 percent, to rank its remaining eligible school attendance areas by grade span. Sections 1113(a)(2) defines an eligible school attendance area as one in which the percentage of poor children is at least as high as the percentage of such children in the LEA as a whole. The Secretary has determined that it is reasonable to continue the flexibility contained in the current Chapter 1 regulations. Thus, an LEA may base school eligibility on (1) the overall poverty percentage for the LEA as a whole or (2) the districtwide poverty percentage for each grade span.

Changes: The Secretary has added § 200.28(a)(3) of the regulations, which permits an LEA that ranks its school attendance areas or schools at or below 75 percent poverty by grade span to determine the percentage of children from low-income families in the LEA as a whole for each grade span grouping.

Comment: One commenter noted that proposed regulations do not address how LEAs may handle carryover funds when allocating funds to school attendance areas.

Discussion: LEAs have considerable discretion in handling carryover funds. For example, an LEA may: (1) allow each school to retain its carryover funds for use in the subsequent year; (2) add carryover funds to the LEA's subsequent year's allocation and distribute to participating areas and schools in accordance with allocation procedures; or (3) designate carryover funds for particular activities that could best benefit from additional funding (examples: parental involvement activities or for schools with the highest concentrations of poverty). The Secretary has provided guidance to clarify this issue.

Changes: None.

Comment: A number of commenters raised issues concerning the within-district allocation of funds to provide for children residing in participating public school attendance areas but attending private schools. Virtually all of the comments focused on problems with the availability for the 1995–96 school year of adequate poverty data on those children. Because of the difficulty in obtaining reliable poverty data for private school children, several commenters suggested that there be a one-year delay in implementing the within-district allocation procedures and that the procedures used during the 1994–95 school year be used for one more year. Other commenters recommended that, if reliable poverty data on private school children residing in a participating school attendance area are not available, an LEA be allowed to apply the poverty percentage of public school children residing in the participating school attendance area to the number of children from that attendance area attending private schools to determine a count of poor private school children.

Discussion: Under Part A of Title I, an LEA must distribute funds generally to participating school attendance areas based on the total number of children from low-income families residing in those attendance areas, including children from low-income families attending private schools. The level of services available for eligible private school children will be determined by the amount of funds generated by poor private school children residing in participating areas. The Secretary realizes that the collection of data needed to implement these provisions becomes complicated because many private schools do not participate in the free and reduced price lunch program, whose data will likely be used by most LEAs.

Section 200.28(a)(2) of the proposed regulations addressed this issue by making clear that, if poverty data are not available for private school children as are available for public school children, an LEA may use comparable data for private school children collected through an alternative means such as a survey. The Secretary has expanded this provision in the final regulations to also make clear that an LEA may use data from existing sources such as Aid to Families with Dependent Children or tuition scholarship programs. The Secretary has also added paragraph (a)(2)(ii), which provides that, if complete actual poverty data are not available on private school children, an LEA may extrapolate from actual data on a representative sample of private school children the number of poor private school children residing in a particular attendance area. For example, if parents of half the private school children who reside in a participating school attendance area respond to a survey and 50 percent of the private school children whose parents respond are poor, the LEA may project from this sample that 50 percent of the private school children residing in that attendance area are poor. The sample size should be large enough to draw a reasonable conclusion that the poverty estimate is accurate.

Even with this additional flexibility, however, an LEA may still not have adequate poverty data on private school children that it needs for the 1995–96 school year in time to make allocations to participating school attendance areas, complete the planning process with respect to services for both public and private school children, and submit timely plans to their SEA for approval.

Thus, *for the 1995–96 school year only*, an LEA that does not have adequate poverty data on private school children must apply the poverty percentage of each participating public school attendance area to the number of private school children in that area. For example, if a participating public school area has 50 percent poverty and 100 children who reside in that area attend private schools, 50 private school children would be deemed to be poor and thus generate Title I funds. For school years after 1995–96, actual poverty data (or a reasonable estimate based on an adequate sample) will be required.

The Secretary realizes that there may be issues about the adequacy of the poverty data available for private school children. These issues need to be resolved in consultation with private school officials. Because sampling would be permitted, an LEA would not need to have actual data on each private school child residing in a participating school attendance area for the data to be adequate. Moreover, to allay privacy concerns, an LEA does not need to collect or maintain the names of individual poor children attending private schools or signatures of their parents or guardians. In determining the adequacy of the data, an LEA should take into consideration factors such as the reliability of the data, the response rate, and whether the data are comparable to the data on public school children.

The Secretary urges public and private school officials to continue their efforts to collect actual poverty data for the 1995–96 school year, particularly in light of the flexibility to use sampling. To facilitate these efforts, SEAs and LEAs may wish to extend deadlines and amend applications, as necessary. Assuming adequate poverty data on private school children are not available for the 1995–96 school year, efforts to collect actual data should continue, because the alternative method requiring an LEA to apply the poverty rate for each public school attendance area to the private school children in that area will be allowed only for the 1995–96 school year.

Changes: Several changes have been made. The Secretary has added § 200.28(a)(2)(i)(B)(*2*) to make clear that an LEA may use data from existing sources such as Aid to Families with Dependent Children or tuition scholarship programs. The Secretary has also added paragraph (a)(2)(ii), which provides that, if complete actual poverty data on private school children are not available, an LEA may extrapolate from actual data on a representative sample of private school children the number of poor private school children. Finally, the Secretary has added paragraph (a)(2)(iii) to require, for the 1995–96 school year only, an LEA that does not have adequate data on the actual number of private school children from low-income families under either paragraph (a)(2) (i) or (ii) to derive the number of those children by applying the poverty percentage of each participating public school attendance area to the number of private school children who reside in that area.

Comment: Several commenters recommended that § 200.28 of the regulations permit an LEA, in order to provide services to eligible private school children, to reserve an amount of funds that is proportionate to the number of children from low-income families who attend private school in the entire LEA compared to the number of children from low-income families who attend public schools in the LEA.

Discussion: The clear meaning of the statute requires an LEA to allocate Title I funds based on the number of poor private school children residing in participating public school attendance areas. Under section 1113(c)(1) of Title I, funds are allocated to participating school attendance areas ''on the basis of the total number of children from low-income families in each area or school.'' The ''total number of children from low-income families'' includes both poor public and private school children residing in each public school attendance area. Consistent with this provision, section 1120(a)(4) of Title I requires expenditures for services to eligible private school children to be ''equal to the proportion of *funds allocated to participating school attendance areas* based on the number of children from low-income families who attend private schools (emphasis added).'' Determining the amount of funds available for services to private school children at the LEA level would be inconsistent with allocating funds to participating areas based on the number of poor public and private school children in each area.

Changes: None.

Comment: One commenter interpreted § 200.28 of the regulations to require only that the allocation of funds to school attendance areas be based on the number of children from low-income families from both public and private schools. According to the commenter, § 200.28 would allow an LEA to select and rank eligible attendance areas or schools based only on the number of public school poor children.

Discussion: Section 200.28 deals only with the allocation of funds to participating school attendance areas and schools and makes clear that funds must be allocated on the basis of the total number of children—public and private—from low-income families in each area or school. Thus, adequate data on the number of private school children from low-income families in participating school attendance areas is essential. To include numbers of private school children in identifying and selecting eligible school attendance areas and schools, however, would require adequate poverty data on private school children throughout the LEA. Because obtaining these data for the entire LEA may be extremely difficult, an LEA may identify and rank its eligible school attendance areas and schools on the basis of children from low-income families attending public schools only.

Changes: None.

Comment: Several commenters raised the issue of how private school children would be identified as residing in a participating attendance area if an LEA is operating under an open enrollment, a desegregation, or magnet school plan where there are no geographically defined attendance areas. A number of commenters recommended that the regulations allow LEAs to allocate Title I funds for poor private school children based on their relative share of the total population of public and private school children for the LEA as a whole.

Discussion: An LEA operating under an open enrollment, desegregation, or magnet school plan must still offer equitable services to eligible private school children. Determining which private school children are eligible, however, is often very difficult because it is not clear to which public school they would have gone were they not in a private school. Because of the wide variety of open enrollment arrangements, the Secretary was unable to fashion a regulation that would appropriately govern each situation. Rather, the Secretary will assist SEAs and LEAs on a case-by-case basis to design reasonable approaches that will allow for the provision of equitable services for eligible private school children.

Changes: The Secretary has added § 200.10(b)(2) to make clear that an LEA that identifies a school as eligible on the basis of enrollment because the school is operating, for example, under an open enrollment or desegregation plan, must determine an equitable way to identify eligible private school children.

Comment: Several commenters recommended that Title I expenditures

for private school children be set at 85 percent of the Title I amount spent on them in the previous year.

Discussion: The statute does not authorize a hold harmless for services to private school students based on the prior year's expenditures.

Changes: None.

Subpart C—Migrant Education Program

Section 200.40 Program Definitions

Comment: One hundred and sixty-seven letters were received objecting to the proposal to require that, to be a migratory agricultural worker or fisher, temporary or seasonal employment in an agricultural or fishing activity must be a ''principal means of livelihood.'' Most of the commenters on this issue read into the proposed language a requirement that, for a child to qualify for services under the Migrant Education Program (MEP), the child's parents or guardians either must derive the majority of their income from, or spend the majority of their time performing, agricultural or fishing activities. Most of the commenters were concerned that the proposed language imposed a specific recordkeeping burden on migratory workers. Specifically, they believed that, for a child to be determined eligible under the MEP, his/her parent or guardian now would be required to maintain, and produce for inspection by State and local MEP staff, records documenting the percentage of time or income associated with their agricultural or fishing work.

Many commenters also suggested that the proposed language would place an unreasonable burden on local MEP staff, by requiring them to make subjective determinations of eligibility based on review of parents' income or occupational history records. Several commenters noted that these determinations would vary from place to place and from MEP staff member to staff member.

While the majority of commenters suggested eliminating the proposed language, several commenters suggested that the Secretary should clarify the proposed language and/or issue clear guidance on how to determine whether a migratory worker's agricultural or fishing work constitutes ''a principal means of livelihood.''

Discussion: The commenters have misinterpreted the scope and intent of the proposed language regarding what constitutes ''a principal means of livelihood.'' As noted in the preamble to the NPRM, the Secretary proposed this language to better focus MEP services on children of persons with an actual, significant dependency on migratory agricultural or fishing work.

The Secretary never intended the proposed language to mean that agricultural or fishing activities had to constitute the principal means of livelihood for a worker. That is to say, this work need not be the only type of work performed by a worker during the year, nor the one which provides the largest portion of income or which employed the worker for a majority of time. Additionally, the Secretary never intended the proposed language to require a worker or his or her family to maintain, or an SEA or operating agency to review, written documentation on income or work history as a condition of determining the eligibility of children for the MEP.

With regard to the concern about the burden the proposed language might place on State and local MEP staff, the Secretary believes that it is necessary for SEAs and operating agencies receiving MEP funds to determine that children eligible for the MEP are those for whom temporary or seasonal employment in an agricultural or fishing activity constitutes an important part of their families' livelihood. However, this determination should be no more difficult than the determinations currently made by State and local MEP staff regarding the reasonableness of other eligibility information provided by a parent or guardian as to work activities and mobility. State and local officials responsible for determining MEP eligibility often rely on oral information from parents, guardians, as well as employers and others regarding a move to seek or obtain seasonal agricultural or fishing employment. State and local MEP staff currently use their best judgment regarding the accuracy of this information, especially in cases where agricultural or fishing work was sought but not found. The Secretary's interpretation of eligibility requirements under the MEP will continue to permit reliance on any credible source, without the need to secure written documentation from a parent or guardian. The Secretary only intends, with this new eligibility requirement, that State and local staff be reasonably assured that, in view of a family's circumstances, it is sensible to conclude that temporary or seasonal employment in an agricultural or fishing activity is one important way of providing a living for the worker and his or her family.

Changes: In order to clarify the meaning of the new language, the Secretary has revised the regulatory definition in § 200.40(f) of the regulations to clarify that the term ''principal means of livelihood'' as used in § 200.40 (c) and (e) of the regulations means that ''temporary or seasonal employment in an agricultural or fishing activity plays an important part in providing a living for the worker and his or her family.'' The Secretary will issue guidance regarding how SEAs and their operating agencies may exercise flexibility in the ways in which they identify and recruit migratory children consistent with this regulatory requirement.

Comment: Thirty-four commenters noted that the ''principal means of livelihood'' language included in the proposed MEP regulatory definitions was not found in the statute. Seven commenters suggested that the inclusion of this language in the regulations would violate the Department's principles for regulating insofar as the proposed language was not absolutely necessary and/or contrary to the intent of the statute to give flexibility to States and local operating agencies in implementing the new statute.

Discussion: The Secretary believes that the proposed language regarding ''principal means of livelihood'' is a necessary addition to the longstanding definitions of ''migratory agricultural worker'' and ''migratory fisher'' and, therefore, conforms to the Department's regulatory principles. Because the existing definitions had been frozen by prior statutes, children have been identified and served as migratory children simply because they moved with or to join a parent or guardian who, though having another full-time occupation, indicated that he or she moved across a school district line to perform, however briefly, an agricultural or fishing activity. ESEA has removed this statutory freeze. Continuing to allow children to be served as migratory children on the basis of a purely technical application of the definition would perpetuate an injustice against those children whose lives are disrupted by moves made because their families are truly dependent, to a significant degree, on temporary or seasonal agricultural or fishing activities. In this way, the Secretary continues to believe that this change in the MEP definitions is absolutely necessary.

Changes: None.

Comment: None.

Discussion: In order to conform to the statutory language, the Secretary has revised the definition of a ''migratory child'' in § 200.40(d) by replacing the term, ''has moved,'' in subsection (3) with the term, ''migrates.''

Changes: Section 200.40(d)(3) is changed accordingly.

Comment: None.

Discussion: The second sentence of the definition of a ''migratory fisher'' in § 200.40(e) notes that the definition also includes a person who resides in a school district of more than 15,000 square miles, and moves a distance of 20 miles or more to a temporary residence to engage in a fishing activity. As purely an editorial clarification, the Secretary has revised this sentence to read, ''This definition also includes a person who, in the preceding 36 months, resided in a school district of more than 15,000 square miles, and moved a distance of 20 miles or more to a temporary residence to engage in a fishing activity as a principal means of livelihood.''

Changes: Section 200.40(e) is changed accordingly.

Section 200.41 Use of Program Funds for Unique Program Function Costs

Comment: Two commenters addressed this section of the proposed regulations. Both commenters agreed that it was appropriate to use program funds to address those administrative functions that are unique to the MEP; however, one commenter questioned why the proposed regulation also mentioned the use of program funds for ''administrative activities * * * that are the same or similar to those performed by LEAs in the State under subpart A.'' This commenter suggested deleting the language or providing examples of what these activities might include.

Discussion: The MEP is a State-operated as well as a State-administered program. In cases where it directly operates aspects of the program, rather than having local operating agencies do so, an SEA has to perform the same kind of administrative activities that an LEA carries out when it administers a project under subpart A. While these activities could be described as unique to the nature of the MEP, the Secretary believes deleting the term, which has been in the prior regulations, would create unnecessary confusion about the scope of permissible uses of funds under § 200.41 of the regulations. Instead, the Secretary has decided to make minor modifications to clarify that those ''administrative activities * * * that are unique to the MEP'' include ''administrative activities * * * that are the same or similar to those performed by LEAs in the State under subpart A.'' The list of permissible activities has also been expanded to include an example of this type of administrative activity.

Changes: Section 200.41 is changed accordingly.

Section 200.42 Responsibilities of SEAs and Operating Agencies for Assessing the Effectiveness of the MEP

Comment: Two commenters addressed this section of the proposed regulations. One commenter agreed with the proposed language. The other commenter noted that the schoolwide program requirements in § 200.8 of the regulations do not require the identification of particular children as eligible to participate, and questioned how an operating agency can meet its responsibility under § 200.42 of the regulations to evaluate the effectiveness of how a school within the agency which combines MEP funds in a schoolwide program serves migratory children.

Discussion: The commenter misconstrues the applicable provisions of § 200.8, regarding schoolwide programs. While § 200.8(f)(1) does not require a schoolwide program to identify particular children *as eligible to participate* (emphasis added), a schoolwide program will have to identify a given child in terms of needs. This is necessary in order for the school to meet other schoolwide program requirements to (1) employ instructional strategies which address the needs of children who are members of the target population of any program whose funds are included in the schoolwide program [§ 200.8(d)(2)(iv)(A)]; and 2) address the identified needs of migratory children specifically, and document how these needs have been met in the schoolwide program [§ 200.8(c)(3)(ii)(B)(*1*)]. A schoolwide program is also required, under § 200.8(e)(1)(iv)(A)(*2*), to disaggregate assessment data according to specific categories, including migrant status. In this way, a schoolwide program which includes MEP funds will be able to meet the requirements of § 200.42 to determine the effectiveness of the program for migratory students.

Changes: None.

Section 200.44 Use of MEP Funds in Schoolwide Programs

Comment: Nine comments were received regarding the inclusion of MEP funds in schoolwide programs. Seven of the commenters expressed support for the continued inclusion of the proposed language in § 200.8(c)(3)(ii)(B)(*1*) of the regulations. As developed through the negotiated rulemaking process, this subsection requires schoolwide programs to (1) first address, in consultation with parents and other representatives, or both, of migratory children, the identified needs of those children that result from the effects of their migratory lifestyle or are needed to permit them to function effectively in school; and (2) document that services to address those needs have been provided. One commenter expressed concern that the special needs of migratory children will not be addressed in a schoolwide program without a requirement to ''identify and document the services that supplemented the regular academic program.'' Another commenter suggested that the language of § 200.8(c)(3)(ii)(B) of the regulations was too vague and flexible, and would ''allow school districts to evade the intentions of Congress.''

Discussion: The Secretary continues to believe that the language in § 200.8(c)(3)(ii)(B)(*1*) of the regulations, as drafted in negotiated rulemaking, provides an adequate safeguard that the special needs of migratory children will be addressed in schoolwide programs. In particular, subsection (*1*)(*B*) requires that schoolwide programs document that services have been provided to address the identified needs of migratory children. The Secretary continues to believe that it is neither necessary nor desirable—and, in fact, is contrary to the purpose of schoolwide programs—for schoolwide programs to have a requirement to demonstrate that services provided using Federal funds, e.g. MEP funds, combined under the schoolwide program authority supplement the services regularly provided in that school.

Changes: None.

Subpart D—Prevention and Intervention Programs for Children and Youth Who Are Neglected, Delinquent, or At-Risk of Dropping Out

Comment: One commenter indicated that the regulations do not adequately address many of the statutory changes, particularly as they relate to prevention and intervention. The commenter suggests organizing the regulations into State agency and locally operated program categories.

Discussion: In developing regulations for programs authorized by Title I, the Department sought to regulate only where absolutely necessary, and when regulating, to promote flexible approaches to meeting the requirements of the law. The Secretary believes that the statute provides sufficient direction to State agencies (SAs) and local educational agencies (LEAs) operating Part D subpart 1 and 2 programs for children and youth who are neglected, delinquent, or at-risk of dropping out and does not require regulations. The Department, however, is developing more detailed guidance to help SAs and LEAs design programs that meet the

needs of this population. This guidance will be organized to provide guidance related specifically to the Part D, Subpart 1 State agency N or D program and the Subpart 2 local agency program.

Changes: None.

Comment: For the Part D, Subpart 2 local agency program, a commenter asked for clarification about the distinction in funds and services between delinquent and at-risk children and youth. The commenter further asked if LEAs may reserve a portion of their funds for at-risk students who have not been adjudicated delinquent or must LEAs use those funds only for delinquent youth transferring from institutions into the district's schools.

Discussion: LEAs must use a portion of its Title I, Part D, Subpart 2 funds to operate a dropout prevention program for at-risk youth in local schools in the LEA. At the same time, the LEA must also use some of its Subpart 2 funds for programs that will serve children and youth in locally operated correctional facilities and in locally operated institutions or community day programs for delinquent children and youth in accordance with the requirements in section 1425 of Title I.

The statute, however, provides that if more than 30 percent of the children or youth in a local correctional facility or delinquent institution within an LEA do not reside in the LEA after leaving the facility or institution, the LEA is not required to operate a dropout prevention program in a local school.

Changes: None.

Comment: One commenter expressed concern about the low status of ''prison education,'' particularly in his State, where the lack of support for juvenile institutions has reduced both the number and the quality of course offerings and has relegated correctional education to a supplemental or support role. The commenter indicated that there should be more recognition of the status of correctional education and hopes that the Title 1 program in these institutions will help N or D children and youth attain the high standards expressed in Goals 2000 and State school reform initiatives.

Discussion: The Secretary expects consolidated State plans for ESEA programs or individual State plans for Part D funds to provide an overall plan for meeting the needs of N or D children and youth and, where applicable, youth at-risk of dropping out of school that is integrated with the State's other educational programs.

Changes: None.

Comment: One commenter expressed concern that section 1603 of Title I does not require that the membership of the State's Committee of Practitioners include a representative from State agencies (SAs) operating N or D institutions.

Discussion: Section 1603 of Title I requires that the Committee of Practitioners review and comment on all proposed rules, regulations, and policies relating to programs authorized in Title I, including Part D. The Secretary expects that a representative from SAs operating Title I N or D programs will be included on the Committee of Practitioners so it can address issues related to the State agency N or D program.

Changes: None.

Comment: A commenter noted that the regulations do not address how an SEA awards Part D, Subpart 2 grants to LEAs with high numbers or percentages of youth residing in locally operated correctional facilities for youth (including institutions and community day programs or schools that serve delinquent children and youth).

Discussion: The SEA has flexibility in establishing the criteria used to determine which LEAs have high numbers or percentages of children and youth in local correctional facilities or institutions and community day programs for delinquent children. Once an SEA determines which LEAs are eligible, the SEA may award Part D, Subpart 2 subgrant to eligible LEAs through a formula or on a discretionary basis.

Changes: None.

Section 200.50 Program Definitions

Comment: One commenter expressed concern that the definition for locally operated correctional facility does not include institutions or community day programs that serve neglected children and that the Part D, Subpart 2 local agency program does not address the educational needs of these neglected children.

Discussion: The specific educational needs of neglected children are met through several Title I programs. The State agency N or D program, authorized in Part D, Subpart 1 of Title I, serves the needs of neglected children in State-operated or supported institutions or community day programs. Part A, section 1113 of Title I requires that an LEA receiving Title I funds reserve funds to meet the educational needs of children in local institutions for neglected children. If the LEA is unable or unwilling to provide services to children in local institutions for neglected children, the State educational agency must reduce the LEA's allocation by the amount generated by the neglected children and assign those funds to another agency or LEA that agrees to assume educational responsibility for those children.

Changes: None.

Section 200.51 SEA Counts of Eligible Children

Comment: One commenter strongly supported the change requiring the use of enrollment rather than average daily attendance.

Discussion: Section 200.51 of the regulations follows the statute, which requires that counts used for allocating Part D, State agency N or D funds be based on the number of children and youth under aged 21 enrolled in a regular program of instruction for 20 hours per week if in a institution or community day program for N or D children and youth and 15 hours per week if in an adult correctional facility.

Changes: None.

Comment: One commenter objected to requirements in the proposed regulations that State agency N or D allocations be based on counts of children enrolled in a regular program of instruction for 20 hours per week if in an institutions or community day program for N or D children; and only children and youth in institutions with an average length of stay of 30 days or more can be counted. The commenter argued these requirements will result in an under count of the children and youth that State institutions serve and does not take turnover into account.

Discussion: The criteria that children be enrolled in a regular program of instruction for 15 or 20 hours of instruction per week, depending on the type of institution, reflect statutory requirements. The statute, however, addresses the issue of turnover in part by requiring that enrollment be adjusted to take into consideration the relative length of the program's school year.

Although short-term institutions such as detention, diagnostic, and reception centers provide basic education services for youth, the Secretary believes that Title I services are most effective when their duration is longer and is requiring in regulations that the average length of stay in institutions and programs eligible for Title I funds average at least 30 days.

Changes: None .

Subpart E—General Provisions

Section 200.60 Reservation of Funds for State Administration and School Improvement

Comment: One commenter argued that Congress appropriated fiscal year 1995 funds specifically for School Improvement as a limitation or cap on

the amount that could be spent by States for this activity in the same manner that Congress provided funds specifically for State Administration in prior years. According to the commenter, the line item appropriation, therefore, provides the entire amount that may be expended for school improvement activities for 1995–96, and SEAs have no authority to reserve any additional funds for that purpose from their allocations under sections 1002 (a), (c), and (d) of Title I in 1995–96.

Discussion: In the 1995 Appropriations Act (P.L. 103–333), Congress appropriated funds for activities authorized by Title I and specifically provided $27,560,000 for ''program improvement activities.'' Because the ESEA had not been enacted at the time P.L. 103–333 became law, these funds were not appropriated under the authority in section 1002(f) of Title I. However, legislative history accompanying the 1995 Appropriations Act (Senate Report 318, p. 177) indicates that Congress provided a specific amount for program improvement grants with the knowledge that the Senate ESEA bill, S. 1513, also authorized each State to reserve a portion of its Title I LEA and State agency grants for school improvement. Thus, the Secretary believes that Congress intended to provide funds for school improvement as a separate line item and still allow States to reserve additional funds under sections 1003 (a), (c), and (d) from its LEA and State agency grants.

Changes: None.

Section 200.61 Use of Funds Reserved for State Administration

Comment: One commenter believed § 200.61 of the regulations should be expanded to address the use of funds reserved for school improvement. The commenter recommended that any alternative system established by the State should be addressed in its State plan and thereby subject to peer review. The commenter argued that States may be tempted to use school improvement funds to support SEA staff costs that should otherwise be funded with State Administration funds.

Discussion: The Secretary believes that sections 1116 and 1117 of Title I adequately address how States must use school improvement funds. States are expected to address in individual State plans how they will monitor LEA school improvement activities, provide technical assistance, identify LEAs in need of school improvement assistance, take necessary corrective action, and establish a State school improvement support system.

Changes: None.

Comment: One commenter asked what the phrases ''any of the funds'' and ''general administrative activities'' mean in § 200.61 of the regulations.

Discussion: Section 200.61 of the regulations provides that an SEA may use any of the funds it has reserved under § 200.60(a) to perform general administrative activities necessary to carry out, at the State level, any of the programs authorized under Title I. This authority, provided under section 1603 of Title I, is very broad and includes activities that the SEA considers necessary to the proper and efficient performance of its duties under Title I. Such activities may, for example, include reviewing plans submitted by LEAs and State agencies, monitoring program activities at the local level, providing technical assistance, and developing rules and policy guidance needed to implement the law.

Changes: None.

Subpart E—General Provisions

Comment: One commenter strongly supported the language in § 200.63 of the regulations concerning the supplement, not supplant requirement and believed that it clarifies the language of the Title I statute. Another commenter suggested that the regulations further clarify section 1120A(b)(1)(B) of Title I pertaining to the exclusion of supplemental State and local funds from supplement, not supplant determinations, given the likelihood of unintended noncompliance in the near future.

Discussion: Although the Title I legislation on the exclusion of supplemental State and local funds from Title I supplement, not supplant and comparability determinations is different from that in the Chapter 1 legislation, the Secretary believes that the statutory language does not need further clarification beyond that contained in § 200.63(c) of the regulations. To the extent additional clarification becomes necessary, the Department will provide it in policy guidance.

Changes: None.

Comment: One commenter suggested that § 200.65 of the regulations include definitions of terms and requirements that are not clearly described in the statute so that wide variation in State and local interpretation does not result. The commenter suggested that States and LEAs need examples or minimum standards that can be used to interpret and measure terms such as ''joint development,'' ''comprehensive needs assessment,'' ''adequate progress,'' ''high quality,'' ''sufficient,'' and ''compacts''.

Discussion: The Secretary believes that including specific definitions of these terms in the regulations would lessen State and local flexibility. To the extent clarification is needed, the Department will include it in policy guidance.

Changes: None.

Comment: One commenter suggested that sections 14401 and 14501 of Title XIV regarding ESEA waivers and maintenance of effort waivers, respectively, appear contradictory; under section 14401, maintenance of effort may not be waived yet under section 14501, the Secretary has the authority to waive maintenance of effort under certain circumstances.

Discussion: Because section 14501 contains specific maintenance of effort provisions, including the authority to waive those provisions under certain circumstances, that section takes precedence over the general waiver provisions in section 14401. Thus, the Secretary may waive maintenance of effort requirements under programs covered by section 14501, if the jurisdiction meets the statutory criteria for a waiver. If a jurisdiction does not meet those criteria or is not covered under section 14501, the Secretary may not waive maintenance of effort under section 14401.

Changes: None.

Comments on Issues Not Addressed in Final Regulations

Comment: One commenter requested that the Secretary specify a date by which an SEA must distribute its plan to its LEAs (suggesting July 1, 1995) and further specify that the draft plan and final plan be made public, stressing that, because of the LEAs' heavy reliance on the SEA plan, it is imperative that LEAs have access to the SEA plan for review prior to the plan becoming final.

Discussion: The Secretary agrees that an SEA must adequately communicate with its LEAs. In fact, the SEA must consult with LEAs, teachers and other school staff, and parents in developing its State plan. Given the variation among States, however, the Secretary does not believe establishing a national ''due date'' would be appropriate.

Changes: None.

Comment: One commenter recommended that regulations be added to address the provisions of section 1115(b) of Title I that are designed to ensure that students with educational needs are not excluded on the basis of English proficiency, family income, disability, or migrant status. The commenter found that many LEP

students were inappropriately excluded from Chapter 1 participation.

Discussion: Section 1115(b)(2) makes clear that children who are economically disadvantaged, children with disabilities, migrant children, and LEA children are eligible for services under Part A on the same basis as other children selected to receive services. The Secretary does not believe that regulations are needed to enforce this statutory provision.

Changes: None.

Comment: One commenter recommended that the regulations encourage the use of technology to increase learning, parental involvement, and professional development and cited the Conference Report on the legislation, which states: ''The conferees intend to allow maximum flexibility for the use of funds under this Act to encourage schools to think of new ways to use technology to expand the learning day in the home, increase parental involvement with their children's education, and provide readily accessible professional development for teachers and staff.''

Discussion: As reflected in the Improving America's Schools Act (IASA), the use of technology is certainly strongly encouraged. Because the design of Title I programs is a responsibility of schools and LEAs, however, the Secretary believes it is inappropriate to regulate on this issue.

Changes: None.

Comment: One commenter expressed concern that parental involvement is hardly addressed in the regulations. Specifically, because LEA and school-level parent involvement policies must be developed jointly with and agreed upon with parents, the commenter suggested that the terms ''joint development'' and ''agreement'' be defined in the regulations. Two commenters also suggested that the regulations specify the manner in which these activities are to be carried out to ensure that (1) parents and school system personnel can understand concretely the steps for implementing the provisions; and (2) the parental involvement policies provide the SEA and LEA with sufficient information to enable them to determine that the policies are fully adequate to meet the statutory requirements. The commenters also recommended that the regulations make clear that the SEA and LEAs are responsible for ensuring that the parent involvement policies and processes are sufficient to meet Title I's parent involvement requirements.

One commenter suggested that the regulations provide additional clarification regarding school-parent compacts, specifying that the compact must be agreed upon, through informed consent, by parents as part of the school-level parent involvement policy. The commenter also asked that the regulations contain qualifying language providing that nothing in the school-parent compact section shall permit school officials to limit or deny families' rights to privacy and to determine the upbringing of their children. The commenter also suggested that the regulations connect parental involvement sections with other related sections so that parent involvement provisions are not used in isolation.

One commenter strongly supported the terms ''broad-based'' and ''throughout the planning process'' that are contained in the provisions related parental involvement in the development of the State plan and suggested the same language be added in the regulations with respect to parent involvement in local plan and policy development. Another commenter recommended that the regulations outline a framework for parent involvement as described in section 1118 of Title I and, in addition to repeating the statute, expand on the newer parent involvement provisions such as ''Shared Responsibilities for High Student Performance'' and ''Building Capacity for Involvement.''

Discussion: The Secretary strongly agrees that parental involvement is essential for the education of children; the many detailed statutory provisions on parental involvement reflect this belief. Because the statute is very detailed, however, the Secretary does not believe additional regulations are necessary.

Changes: None.

Comment: Two commenters noted that the regulations did not contain complaint procedures. One commenter offered very detailed language to be added. The other commenter expressed concern that, without complaint procedures, many low-income parents would have nowhere to turn to attempt to redress individual and systemic wrongs, and also that LEAs and schools would receive a message that compliance is not important.

Discussion: The Secretary will be issuing in the near future proposed regulations implementing Title XIV of the ESEA and covering other general areas. These proposed regulations will contain provisions on complaint procedures that would apply to Title I.

Changes: None.

[FR Doc. 95–16355 Filed 6–29–95; 10:48 am]

BILLING CODE 4000–01–P

federal register

Monday
July 3, 1995

Part VIII

Department of Agriculture

Animal and Plant Health Inspection Service

7 CFR Part 319

Importation of Fresh Hass Avocado Fruit Grown in Michoacan, Mexico; Proposed Rule

DEPARTMENT OF AGRICULTURE

Animal and Plant Health Inspection Service

7 CFR Part 319

[Docket No. 94–116–3]

Importation of Fresh Hass Avocado Fruit Grown in Michoacan, Mexico

AGENCY: Animal and Plant Health Inspection Service, USDA.

ACTION: Proposed rule and notice of public hearings.

SUMMARY: We are proposing to amend the regulations governing the importation of fruits and vegetables to allow fresh Hass avocado fruit grown in approved orchards in approved municipalities in Michoacan, Mexico, to be imported into certain areas of the United States, subject to certain conditions. We are proposing this action in response to a request from the Mexican Government and following a review of public comments received regarding that request. The conditions to which the proposed importation of fresh Hass avocado fruit would be subject, including pest surveys and pest risk-reducing cultural practices, packinghouse procedures, inspection and shipping procedures, and restrictions on the time of year shipments may enter the United States, would reduce the risk of pest introduction to an insignificant level. Furthermore, climatic conditions in those areas of the United States into which the avocados would be allowed would preclude the establishment in the United States of any of the plant pests known to attack avocados in Michoacan, Mexico.

DATES: Consideration will be given only to comments received on or before October 16, 1995. We also will consider comments made at five public hearings to be held between August 17, 1995, and August 31, 1995. Hearings will be held in Washington, DC, on August 17 and 18, 1995, and in southern California on August 30 and 31, 1995. A notice detailing the specific dates of the remaining hearings will be published in a future issue of the **Federal Register**.

ADDRESSES: Please send an original and three copies of your comments to Docket No. 94–116–3, Regulatory Analysis and Development, PPD, APHIS, Suite 3C03, 4700 River Road Unit 118, Riverdale, MD 20737–1238. Please state that your comments refer to Docket No. 94–116–3. Comments received may be inspected at USDA, room 1141, South Building, 14th Street and Independence Avenue SW., Washington, DC, between 8 a.m. and 4:30 p.m., Monday through Friday, except holidays. Persons wishing to inspect comments are requested to call ahead on (202) 690–2817 to facilitate entry into the comment reading room. The public hearings will be held in Washington, DC; southern Florida; New York, NY; Chicago, IL; and southern California. A notice detailing the specific location of each hearing will be published in a future issue of the **Federal Register**.

FOR FURTHER INFORMATION CONTACT: Mr. Victor Harabin, Head, Permit Unit, Port Operations, PPQ, APHIS, 4700 River Road Unit 136, Riverdale, MD 20737–1236, (301) 734–8645, or FAX (301) 734–5786.

SUPPLEMENTARY INFORMATION:

Public Hearings

Five public hearings will be held on this notice of proposed rulemaking. The Animal and Plant Health Inspection Service (APHIS) will hold one public hearing dedicated exclusively to the scientific basis for this proposed rule. The first hearing will be open to the public, but participation will be limited to experts in the fields of pest risk assessment and pest risk mitigation measures. Four additional hearings will be held to provide a full opportunity to all interested parties to address every aspect of the proposed rule.

The First Public Hearing—Presentations by Experts in Risk Assessment

The first public hearing, on the scientific basis for this proposed rule, is scheduled to be held in Washington, DC, on August 17 and 18, 1995. A notice will be published in a future issue of the **Federal Register** detailing the specific location of the Washington, DC, hearing. This hearing will focus exclusively on the APHIS pest risk assessment documents upon which the proposed rule is based, and will provide an opportunity for experts in relevant disciplines to present their views on those documents and the scientific issues raised by them.

The APHIS pest risk assessment documents upon which this proposal is based identify the plant pest risks associated with the importation of Hass avocados grown in approved orchards in approved municipalities in Michoacan, Mexico, discuss the mitigation measures identified as reasonable and necessary to prevent the introduction of plant pests into the United States, and contain a quantitative risk analysis examining the likelihood of plant pest introduction into the United States if Hass avocados are allowed to be imported as proposed in this document.

Participation in the Washington, DC, hearing will be limited to those who register and who identify themselves as having expertise in the areas of pest risk assessment and mitigation measures. Experts wishing to participate will be asked to furnish for the record their educational background and their expertise and qualifications relevant to pest risk assessment and mitigation measures. Such experts include scientists, technical experts, and academicians expert in entomology, plant health, plant pathology, risk assessment, and risk mitigation. Federal, State, and local officials, growers, and handlers who have experience with risk assessment, plant protection, quarantine, or risk mitigation measures will also be welcome to participate in this first public hearing.

Presenters are welcome to register as a panel if they believe a panel of experts from several fields would foster a more complete discussion and evaluation of issues related to the pest risk assessment underlying this proposal.

Additional Public Hearings

Four additional hearings will be held during the period between August 21, 1995, and August 31, 1995, to address all aspects of this proposed rule. These four public hearings are scheduled to be held in southern Florida; New York, NY; Chicago, IL; and southern California. The California hearing is scheduled to be held on August 30 and 31, 1995; the exact dates of the other three hearings and the specific locations of all four hearings will be announced in a notice published in a future issue of the **Federal Register**.

Any interested party may appear and be heard in person, or through an attorney or other representative. We are interested in obtaining the views of the public on all aspects of this proposed rule, including the APHIS pest risk assessment documents and the conclusions contained therein.

General Information Applicable to All Five Public Hearings

The APHIS pest risk assessment documents upon which this proposal is based are available. Parties interested in receiving copies may obtain them by contacting APHIS' Legislative and Public Affairs Staff at (301) 734–3256 or by writing to Legislative and Public Affairs, 4700 River Road Unit 51, Riverdale, Maryland 20737–1232. Copies of the risk assessment documents will be available at each of the scheduled public hearings.

Persons who wish to speak at the hearings will be asked to provide their names and their affiliations. Those who wish to form a panel to present their views will be asked to provide the name of each member of the panel and the organizations the panel members represent. Parties wishing to make oral presentations may register in advance by calling the Regulatory Analysis and Development voice mail at (301) 734–4346 and leaving a message stating their name, telephone number, organization, and location of the hearing at which they wish to speak. If a party is registering for a panel, the party will also be asked to provide the name of each member of the panel and the organization each panel member represents.

The hearings will begin at 9 a.m. and are scheduled to end at 5 p.m. each day. The Washington, DC, and California hearings may conclude at any time on the second day if all persons who have registered to participate have been heard. Similarly, the other three hearings may conclude earlier than 5 p.m. if all persons who have registered have been heard. The presiding officer may extend the time of any hearing or limit the time for each presentation so that everyone is accommodated and all interested persons appearing on the scheduled dates have an opportunity to participate.

Registration for each hearing may be accomplished in advance in accordance with the above-described instructions, or by registering with the presiding officer between 8:30 a.m. and 9 a.m. on any hearing day.

A representative of APHIS will preside at each public hearing. Written statements are encouraged, but not required. Any written statement submitted will be made part of the record of the public hearing. Anyone who reads a written statement should provide two copies to the presiding officer at the hearing. A transcript will be made of each public hearing and the transcript will be placed in the rulemaking record and will be available for public inspection.

The purpose of these public hearings is to give all interested parties an opportunity to present data, views, and information to the Department concerning this proposed rule. Questions about the content of the proposal may be part of a commenter's oral presentation. However, neither the presiding officer nor any other representative of the Department will respond to the comments at the hearing, except to clarify or explain the proposed rule and the documents upon which the proposal is based.

Background

The Fruits and Vegetables regulations contained in 7 CFR 319.56 through 319.56–8 (referred to below as the regulations) prohibit or restrict the importation of fruits and vegetables into the United States to prevent the introduction and dissemination of injurious insects that are new to or not widely distributed within and throughout the United States. The regulations do not provide for the importation of fresh avocado fruits grown in Mexico into the United States, except to Alaska under the conditions specified in § 319.56–2bb.

On November 15, 1994, we published an advance notice of proposed rulemaking in the **Federal Register** (59 FR 59070–59071, Docket No. 94–116–1) announcing that APHIS had received a request from the Government of Mexico that we allow, under certain conditions, the importation of fresh Hass avocado fruit grown in approved orchards in approved municipalities in Michoacan, Mexico, into certain areas of the United States. The advance notice solicited public comment on the Mexican Government request and advised the public that two public meetings would be held to provide interested persons with an opportunity to present their views regarding the possible importation of fresh Hass avocado fruit grown in Mexico.

We solicited comments concerning the Mexican Government request for 28 days ending on December 13, 1994. During that period, we received over 100 comments (including those given at the hearings), several of which requested that we extend the comment period so that interested persons would have additional time to analyze the Mexican Government request before submitting comments. On December 19, 1994, we published a document in the **Federal Register** (59 FR 65280, Docket No. 94–116–2) informing the public that we had reopened the comment period and would continue to accept comments until January 3, 1995, including any comments received between December 13—the close of the original comment period—and December 19. By the close of the extended comment period, we had received over 300 comments.

Twenty of the comments favored allowing the importation of fresh Hass avocado fruit grown in Mexico; the remainder objected. We carefully considered all of the comments during the formulation of this proposed rule and have included proposed phytosanitary requirements that we believe address many of the concerns expressed in the comments. Other issues raised in the comments that are not addressed by the proposed phytosanitary requirements are discussed below, following the explanation of our proposal.

Mexican Government Request

In July 1994, Sanidad Vegetal, the plant protection branch of the Mexican Ministry of Agriculture and Water Resources, requested that APHIS consider allowing the importation of fresh Hass avocado fruit grown in approved orchards in approved municipalities in Michoacan, Mexico, into Connecticut, Delaware, Illinois, Indiana, Kentucky, Maine, Maryland, Massachusetts, Michigan, New Hampshire, New Jersey, New York, Ohio, Pennsylvania, Rhode Island, Vermont, Virginia, West Virginia, and Wisconsin. A detailed plan that accompanied the request contained specific phytosanitary guidelines for mitigating the risk of plant pest introduction associated with the importation of Mexican avocados into the United States. The risk mitigation plan was based, in part, on research conducted in 1993 by Sanidad Vegetal to determine the susceptibility of Hass avocados to fruit fly infestation; it was also based on historical avocado pest survey data for Michoacan and recent Sanidad Vegetal surveys of Michoacan for pests specific to avocados.

The insect pests of concern are three species of fruit flies (*Anastrepha ludens*, *A. serpentina*, and *A. striata*), four species of avocado weevils (*Conotrachelus perseae*, *C. aguacatae*, *Heilipus lauri*, and *Copturus aguacatae*), and one species of avocado seed moth (*Stenoma catenifer*). These pests would present a significant pest risk to U.S. crops if introduced, particularly in the southeastern and southwestern United States.

Risk Management Analysis and Pest Risk Analysis Documents

This proposed rule is based in part on a document prepared by APHIS entitled ''Risk Management Analysis: A Systems Approach for Mexican Avocado,'' which assesses the pest risks and risk management options associated with the proposed importation of fresh Hass avocado fruit grown in Michoacan, Mexico. Risk mitigation measures discussed in that document are included in this proposed rule as requirements for the proposed importation. APHIS has also prepared a quantitative pest risk analysis for the proposed importation of fresh Hass avocado fruit grown in Michoacan, Mexico, that examines the likelihood of pest introduction into susceptible areas

of the United States. Copies of those documents may be obtained by contacting APHIS' Legislative and Public Affairs staff at (301) 734–3256 or by writing to Legislative and Public Affairs, Public Affairs, 4700 River Road Unit 51, Riverdale, MD 20737–1232.

Systems Approaches

Using systems approaches to phytosanitary security, APHIS establishes growing, packing, shipping, and other conditions whereby fruits and vegetables may be imported into the United States from countries that are not free of certain plant pests. APHIS has used systems approaches to establish conditions for the importation of several commodities, including Unshu oranges from Japan (7 CFR 319.28), tomatoes from Spain (7 CFR 3119.56–2dd), and peppers from Israel (7 CFR 319.56–2u).

For the Unshu oranges mentioned above, APHIS used a systems approach to establish growing, treatment, packing, and inspection requirements designed to prevent the introduction of citrus canker, which exists in Japan and can infect Unshu oranges. The rule requires Japanese growers and agricultural agencies to survey groves for citrus canker, undertake measures to exclude citrus canker from groves of Unshu oranges intended for export, and apply surface sanitary treatments to Unshu oranges being exported to the United States. For the tomatoes and peppers mentioned above, APHIS used a systems approach to develop measures to prevent the introduction of Mediterranean fruit fly (Medfly), which exists in Spain and Israel and can infest tomatoes and peppers. These rules require Spanish and Israeli agricultural agencies and growers to periodically survey growing areas for Medfly, undertake measures to exclude Medfly from growing and packing areas, and pack tomatoes and peppers in flyproof packaging to prevent infestation. Each of these programs has performed successfully.

APHIS also uses systems approaches to establish growing, packing, shipping, and other conditions whereby domestic fruits and vegetables may be exported from areas in the United States that are not free of certain plant pests. Systems approaches are currently used to establish export conditions for certain citrus fruit from Florida and Texas, apples from Washington, and stonefruit from California. Each of these programs has performed successfully.

In developing this proposal to allow the importation of fresh Hass avocado fruit grown in Michoacan, Mexico, APHIS again has used a systems approach to phytosanitary security. Using a systems approach, APHIS developed a series of complementary phytosanitary measures, including pest surveys and pest risk reducing cultural practices, packinghouse procedures, a limited shipping season, inspection and shipping procedures, and restrictions on distribution within the United States, all intended to prevent the introduction of avocado seed and stem weevils, an avocado seed moth, and three species of fruit flies that can infest avocados and other host fruits and vegetables.

Proposed Import Requirements for Hass Avocados Grown in Mexico

We are proposing to allow fresh Hass variety avocados to be imported into the United States from Michoacan, Mexico, if they are grown, packed, and shipped under specified phytosanitary conditions designed to mitigate the risk of plant pest introduction. The conditions for importation would be set out in a new section of the regulations, § 319.56–2ff. Some of our proposed requirements were originally suggested in the mitigation plan that accompanied the request submitted by the Mexican Government. Other proposed requirements go beyond those suggested in the plan and are based in part on comments we received in response to our November 1994 advance notice of proposed rulemaking, as we agree with many of the comments that some additional safeguards would be necessary to prevent the introduction of plant pests if Mexican avocados were imported into the United States.

Permit Required

Section 319.56–3 of the regulations requires that a person who wishes to import fruits or vegetables under the regulations must first apply for a permit from APHIS' Plant Protection and Quarantine Programs. Section 319.56–4 states that, upon receipt of an application and approval by an inspector, a permit will be issued that specifies the conditions of entry and the port of entry. Therefore, our proposed regulations would require that the avocados be imported under a permit issued in accordance with § 319.56–4.

Commercial Shipments

We would allow only commercial shipments of Hass avocados to be imported from Michoacan into the United States. Wild or ''backyard'' avocados generally grow under very different conditions than commercial produce. Avocados growing in the wild or in backyard gardens usually grow among different varieties of plants and produce, with little or no pest control and a lack of sanitary controls during both growing and packing. Therefore, the importation of wild or backyard avocados would present a greater risk of pest introduction than would the importation of commercially produced avocados.

Seasonal Restrictions

We would allow Hass avocados to be imported into the United States from Michoacan only from November through February. The risk of *Anastrepha* fruit flies infesting avocados and subsequently being introduced into the United States through importation is virtually eliminated by restricting avocado importation to these months. *Anastrepha* fruit flies reduce mating and oviposition activities when temperatures drop below 70 °F. Generally, temperatures in the growing areas in Michoacan are below 70 °F between November and February. Furthermore, any risk that fruit flies and other pests of avocados could become established in the United States during these months would be greatly reduced because of low temperatures and subsequent lack of host material in the areas proposed for distribution.

Distribution Within the United States

Hass avocados imported from Michoacan could be distributed only in Connecticut, Delaware, the District of Columbia, Illinois, Indiana, Kentucky, Maine, Maryland, Massachusetts, Michigan, New Hampshire, New Jersey, New York, Ohio, Pennsylvania, Rhode Island, Vermont, Virginia, West Virginia, and Wisconsin. We do not believe that any of the pests of concern could become established if introduced into these States, due to the cold climate and a lack of suitable host material during the months imports would be allowed. As noted below, we would require that the boxes in which the avocados are shipped be marked with the statement ''Distribution limited to the following States: CT, DC, DE, IL, IN, KY, ME, MD, MA, MI, NH, NJ, NY, OH, PA, RI, VA, VT, WV, and WI.''

Trust Fund Agreement and APHIS Participation

APHIS would be directly involved with Sanidad Vegetal in the monitoring and supervision of avocado exports to the United States. APHIS would not be involved in a preclearance program for the fruit in Mexico; rather, APHIS would monitor orchard surveys, trapping, harvest, and packinghouse operations to ensure that our export requirements are met. The costs of APHIS' involvement during each shipping season would be covered by a trust fund agreement between APHIS

and an industry association representing Mexican avocado growers, packers, and exporters. Under the agreement, the Mexican industry association would pay in advance all estimated costs that APHIS expected to incur through its involvement in the required trapping, survey, harvest, and packinghouse operations prescribed in proposed § 319.56–2ff(c). Those costs would include administrative expenses incurred in conducting the services and all salaries (including overtime and the Federal share of employee benefits), travel expenses (including per diem expenses), and other incidental expenses incurred by the inspectors in performing those services. The agreement would require the Mexican industry association to deposit a certified or cashier's check with APHIS for the amount of the costs, as estimated by APHIS. If the deposit was not sufficient to meet all costs incurred by APHIS, the agreement would further require the Mexican industry association to deposit another certified or cashier's check with APHIS for the amount of the remaining costs, as determined by APHIS, before APHIS' services would be completed. After a final audit at the conclusion of each shipping season, any overpayment of funds would be returned to the Mexican industry association or held on account until needed.

Safeguards in Mexico

We are proposing to require that the avocados be grown in the Mexican State of Michoacan in an orchard located in a municipality that has been surveyed for certain pests and found to be free from those pests. A trapping program would also have to be in place in the municipality to detect the presence of certain fruit flies. We would require that Sanidad Vegetal submit an annual workplan to APHIS that detailed the activities Sanidad Vegetal would carry out to meet the surveying, trapping, and other phytosanitary requirements of the proposed regulations. Sanidad Vegetal would be required to supervise all of the trapping and pest surveys required of municipalities and orchards wishing to export Hass avocados to the United States. Although Hass avocado growers could pay for trapping and survey expenses, Sanidad Vegetal would be responsible for hiring, training, and supervision of all personnel involved in trapping and conducting the pest surveys. APHIS would be directly involved with Sanidad Vegetal in the monitoring and supervision of the trapping and surveying activities.

Municipality Requirements

A municipality would have to be listed as an approved municipality in the annual work plan provided to APHIS by Sanidad Vegetal and would have to be determined to be free from the seed weevils *Heilipus lauri, Conotrachelus perseae,* and *C. aguacatae,* and the seed moth *Stenoma catenifer* before Hass avocados could be exported to the United States from orchards in that municipality. Sanidad Vegetal would determine the pest status of municipalities by conducting annual surveys during the growing season that would have to be completed before harvest. We would require that Sanidad Vegetal survey at least 300 hectares in any municipality with orchards wishing to export to the United States. Portions of each registered orchard would have to be included in these surveys. Also, areas with backyard and wild fruit would have to be included. We have determined that surveying 300 hectares within a municipality results in a 95 percent confidence level that an infestation of one percent or greater within the municipality would be detected. As stated above, APHIS would monitor these pest surveys.

Also, APHIS would require Sanidad Vegetal to trap for Medfly at a rate of one trap per 1 to 4 square miles throughout each Michoacan municipality containing orchards growing avocados for export to the United States. Although Medfly outbreaks have occurred only in southern Mexico, we feel such trapping is necessary as a safeguard against the possible migration of the pest to Michoacan.

Sanidad Vegetal Avocado Export Program

Only growers, orchards, and packinghouses participating in the avocado export program administered by Sanidad Vegetal could export Hass avocados to the United States. The Sanidad Vegetal avocado export program has been in place for more than 7 years to monitor the export of avocados to several European countries, Japan, and elsewhere. Sanidad Vegetal requires participants to comply with inspection, packing, and shipping practices to ensure that seed weevils and other pests are not present in avocados exported from Mexico.

The Sanidad Vegetal avocado export program has been very successful in ensuring that only pest-free avocados are exported from Michoacan. For example, during the last 3 years, over 5 million kilograms of avocados were exported from Michoacan to Japan. Over this same period, the Japanese Ministry of Agriculture, Forestry, and Fisheries, which extensively samples and cuts avocados imported from Mexico, recorded no interceptions of any of the pests of concern (*Anastrepha ludens, A. serpentina, A. striata, Conotrachelus perseae, C. aguacatae, Heilipus lauri, Copturus aguacatae, Stenoma catenifer*).

While our proposed regulations would place conditions on avocado growers, orchards, and packinghouses beyond those required by the Sanidad Vegetal program, we believe that requiring participation in the Sanidad Vegetal avocado export program would help minimize the risk that Hass avocados infested with weevils or other pests would be exported to the United States.

Orchard and Grower Requirements

The orchard and the grower would have to be registered with the Sanidad Vegetal avocado export program discussed above and would have to be listed as an approved orchard or an approved grower in the annual work plan provided to APHIS by Sanidad Vegetal.

We are proposing to require that Sanidad Vegetal conduct surveys, at least annually, for the avocado stem weevil *Copturus aguacatae* in each orchard wishing to export avocados to the United States and in all contiguous orchards and properties. These surveys would have to be conducted during the growing season and completed before harvest. Orchards would have to be free of this pest in order to be eligible to export avocados to the United States.

To monitor the fruit fly population within avocado production areas, APHIS would require Sanidad Vegetal to conduct trapping throughout the year for the three *Anastrepha* fruit fly species of concern at a rate of one trap per 10 hectares within certified avocado orchards. If one fruit fly were captured within an orchard, export could continue, but 10 traps would have to be deployed in the 50-hectare area immediately surrounding the find. If additional fruit flies were caught within 30 days within the 260-hectare area surrounding the first find, exports could continue only after malathion bait treatments of the orchards involved. The purpose of this pesticide treatment would be to lower fruit fly populations in avocado production areas, thus lessening the chances of infestation. APHIS uses similar procedures in citrus fruit production areas of Florida and Texas where *Anastrepha* fruit flies exist.

Growers would be required to undertake regular field sanitation

measures. APHIS would require that fallen avocado fruit be removed from orchards prior to harvest and that the fallen fruit not be included in shipments of fruit to be packed for export. Fallen avocado fruit can be overripe or damaged, and such fruit is more likely to be infested by pests. Also, dead branches on avocado trees would have to be cut back periodically and the dead branches removed from the orchard. Pruning discourages stem weevil infestations. Both APHIS and Sanidad Vegetal would periodically inspect field sanitation in certified avocado orchards.

APHIS would require harvested avocados to be moved from the orchard to the packinghouse within 3 hours of harvest; if more than 3 hours pass between the time the avocados are harvested and the time they are moved to the packinghouse, the avocados would have to be protected from fruit fly infestation while awaiting transport. For movement, the avocados would have to be placed in field boxes or containers marked with the Sanidad Vegetal registration number of the orchard of origin and, during their movement from the orchard to the packinghouse, the avocados would have to be protected from fruit fly infestation. Vehicles transporting the avocados would be required to carry a field record specifying that the fruit is from a certified orchard.

Packinghouse Requirements

Under our proposed regulations, the packinghouse would have to be registered with the Sanidad Vegetal avocado export program and listed as an approved packinghouse in the annual work plan provided to APHIS by Sanidad Vegetal. Fruit from orchards that are not certified by Sanidad Vegetal for participation in the avocado export program would not be allowed on the premises of a packinghouse while avocados intended for export to the United States were being packed.

All openings in the packinghouse would have to be covered by screening with openings of not more than 1.6 mm to prevent the entry of insects. Also, packinghouses would have to have double door systems at the entrances to the facility, as well as at the entrance to the packing area for avocados intended for export to the United States.

Prior to the culling process, Sanidad Vegetal would have to select, cut, and inspect a sample of 250 avocados per shipment to detect the presence of weevils, fruit flies, or other pests (e.g., a shipment of 500 boxes would have a fruit selected from every second box). We have determined that sampling 250 avocados in this manner would yield a 95 percent confidence level of detecting one percent or greater infestation.

The identity of the avocados would have to be maintained from the field boxes or containers, which would bear the Sanidad Vegetal registration of the orchard of origin, to the shipping boxes. The fruit would have to be packed in new, clean boxes, with the grower, packer, and exporter clearly identified on those boxes. Maintaining the identity of the avocados from the field boxes or containers to the shipping boxes would ensure that any infested fruit could be traced back to the orchard where it was grown. Also, the shipping boxes would have to be clearly labeled to indicate the restrictions on the distribution of the avocados in the United States.

After being loaded into the boxes, the avocados would have to be placed into a refrigerated truck or refrigerated container for transit through Mexico to the port of first arrival in the United States. After the avocados had been inspected, packed, and loaded into a refrigerated truck or refrigerated container, Sanidad Vegetal personnel would be required to secure the refrigerated truck or refrigerated container with a seal before the truck or container left the packinghouse. Any avocados that had not been loaded into a refrigerated truck or refrigerated container by the end of the work day would have to be kept in the screened packing area.

A phytosanitary certificate issued by Sanidad Vegetal certifying that all of these conditions have been met would have to accompany each shipment of avocados.

Avocado Pest Interception

As discussed above, we are proposing that Hass avocado fruit be imported only from orchards located in municipalities in Michoacan certified free of the four seed pests *Heilipus lauri, Conotrachelus perseae, C. aguacatae,* and *Stenoma catenifer,* and only from orchards in Michoacan certified free of the stem weevil *Copturus aguacatae.* We are also proposing that Sanidad Vegetal undertake certain actions in the event any of these avocado pests are discovered during the required annual pest survey or during other monitoring or inspection activities in the orchards or packinghouses.

Upon the discovery of any of the four avocado seed pests, Sanidad Vegetal would be required to immediately initiate an investigation and take measures to isolate and eradicate the pests. Sanidad Vegetal would also have to notify APHIS and provide information regarding the origin of the circumstances of the infestation and the pest risk mitigation measures taken. The municipality in which the infestation occurred would lose its pest-free certification, and avocado exports from that municipality would be suspended until APHIS and Sanidad Vegetal agreed that the pest eradication measures taken had been effective and that the pest risk within that municipality had been eliminated.

If Sanidad Vegetal discovered the stem weevil *Copturus aguacatae* in an orchard during an orchard survey or other monitoring or inspection activity in the orchard, Sanidad Vegetal would have to provide APHIS with information regarding the circumstances of the infestation and the pest risk mitigation measures taken. Similarly, if the stem weevil *Copturus aguacatae* was discovered in fruit at a packinghouse, Sanidad Vegetal would have to investigate the origin of the infested fruit and provide APHIS with information regarding the circumstances of the infestation and the pest risk mitigation measures taken. In either instance, the orchard where the infested fruit originated would lose its export certification immediately for the entire shipping season of November through February.

Shipping Requirements and Restrictions

Although the safeguards discussed above make it unlikely that avocados infested with seed pests or fruit flies would enter into the United States, we propose to require the following safeguards for movement of the avocados to the northeastern United States in order to prevent the escape and establishment of an insect pest outside of the northeast should any be present on the fruit.

We propose to allow Hass avocados from Mexico to enter the United States at any port within the 20 northeastern States that would be allowed to receive Hass avocados from Michoacan. We are also proposing to allow Hass avocados from Michoacan to enter the United States at certain additional ports provided the avocados are moved within a specified transit corridor to the 20 northeastern States that would be allowed to receive the avocados. We would allow the avocados to enter at the ports of Galveston and Houston, TX, and the border ports at Nogales, AZ; Brownsville, Eagle Pass, El Paso, Hidalgo, and Laredo, TX, all of which are staffed by APHIS inspectors. These ports are among those currently listed for avocados from Mexico moved through the United States to destinations outside the United States under the plant quarantine safeguard

regulations in 7 CFR 352.29, so the inspectors at these ports are experienced in dealing with avocado shipments. We would also allow the avocados to enter at other ports located within that area of the United States bordered by the proposed transit corridor discussed below.

We also propose to establish boundaries restricting the corridor through which the avocados may transit the United States en route to the northeastern United States. Except as explained below for avocados entering the United States at Nogales, AZ, avocados moved by truck or rail car would be allowed to transit only that area of the United States bounded on the west by a line extending from El Paso, TX, to Denver, CO, and due north from Denver; and on the east and south by a line extending from Brownsville, TX, to Galveston, TX, to Kinder, LA, to Memphis, TN, to Knoxville, TN, following Interstate 40 to Raleigh, NC, and due east from Raleigh. All cities on these boundary lines would be included in this area. If the avocados are moved by air, the aircraft would not be allowed to land outside this area. Avocados that enter the United States at Nogales, AZ, would have to be moved to El Paso, TX, by the route specified on the permit, and would then have to remain within the shipping area described above. These proposed boundaries are similar to those currently in effect for Mexican avocados moved through the United States to destinations outside the United States (see 7 CFR 352.29(f)), but differ in two significant ways. First, because avocados imported under this proposed rule could be distributed only in the northeastern United States, the proposed western boundary would not provide for movement through the northwestern United States. Second, the southeastern boundary would be situated further to the south to give shippers access to the entire States of Kentucky, West Virginia, and Virginia, which are among the States in which the avocados could be distributed under this proposed rule; those States are not fully included in the transit corridor described in 7 CFR 352.29(f). These boundaries would provide protection to the western and southeastern regions of the United States, where avocados and other hosts of fruit flies and are grown, while allowing shippers to utilize the most direct interstate routes to the northeastern United States.

Further, we propose that when moving within these boundaries to the northeastern United States, avocados would have to be moved either by air or in a refrigerated truck or refrigerated rail car or in refrigerated containers on a truck or rail car. If the avocados are moved in refrigerated containers on a truck or rail car, an APHIS inspector would have to seal the containers with a serially numbered seal at the port of first arrival in the United States. If the avocados are moved in a refrigerated truck or a refrigerated rail car, an APHIS inspector would have to seal the truck or rail car with a serially numbered seal at the port of first arrival in the United States. If the avocados are transferred to another vehicle or container in the United States, an APHIS inspector would have to be present to supervise the transfer and would have to apply a new serially numbered seal. The avocados would have to be moved through the United States under Customs bond. These safeguards are the same as those currently in effect for avocados from Mexico that are moved through the United States to destinations outside the United States (see 7 CFR 352.29(e)). Because this proposed rule and the avocado transit regulations in 7 CFR 352.29 share a similar purpose (i.e., the avocados must move through areas of the United States considered to be low-risk areas for the establishment of tropical and subtropical fruit pests), we believe it is reasonable that the safeguards required by both regulations should be the same.

Inspection

The avocados would be subject to APHIS inspection at the port of first arrival, at any stops in the United States en route to the Northeast, and upon arrival at the terminal market to ensure they are being moved in compliance with APHIS regulations. At the port of first arrival, APHIS would sample and cut avocado fruit to detect infestation by fruit flies, avocado seed and stem weevils, the avocado seed moth, and other pests. The number of avocados that the inspectors would sample and cut in any given shipment would depend upon the size of the shipment. Inspectors also would ensure that a valid phytosanitary certificate was present, that the limited distribution statement appeared on all boxes, and that the shipment was consigned to a State allowed to receive Hass avocados from Michoacan.

Responses to Comments

As stated above, we received over 300 comments by the closing date of the comment period for the advance notice of proposed rulemaking. The comments were submitted by avocado growers, processors, packers, and importers; trade and grower associations; grocers; and State and local departments of agriculture. Twenty of the comments favored allowing the importation of Mexican avocados. The remainder raised objections, most of which are summarized, with our responses, below.

Most of the comments assert that research conducted in 1993 by the Sanidad Vegetal concerning Hass avocado susceptibility to *Anastrepha* fruit flies was inconclusive and did not demonstrate that Hass avocados are non-hosts to the fruit flies. The comments contend that before APHIS considers any proposal to import Hass avocados from Mexico, Sanidad Vegetal should (1) replicate and expand laboratory and field research regarding host status of Hass avocados under fully controlled conditions and (2) undertake a multi-site, multi-year trapping program to establish the population and seasonal abundance of *Anastrepha* fruit flies in Michoacan. Only after examining the results of such research, according to the comments, could APHIS and Sanidad Vegetal develop effective measures for preventing the introduction of *Anastrepha* fruit flies into the United States through the importation of Hass avocados.

We agree that the 1993 research was limited in scope and did not prove the Hass avocado to be a non-host for *Anastrepha* fruit flies. However, after considering the 1993 research and other available evidence, including interception data and past studies, we believe the Hass avocado to be a non-preferred host for *Anastrepha* fruit flies prior to harvest. Although we believe Hass avocados become better hosts for *Anastrepha* fruit flies shortly following harvest, we are confident that the phytosanitary requirements we would place on harvesting, packing, transport, and distribution, which are more extensive and redundant than those proposed by Sanidad Vegetal, would prevent infested Hass avocado fruit from being exported from Michoacan into the United States.

Several comments specifically questioned the laboratory testing conducted in 1993 by Sanidad Vegetal to determine the susceptibility of Hass avocados to *Anastrepha* fruit flies. The comments claim that induced infestation tests both in the laboratory and under controlled field conditions were conducted improperly (e.g., allegedly, laboratory climatic conditions were not controlled, sample sizes of fruit were too small, inappropriate cages were used in field testing), thus invalidating any results of those tests. Furthermore, these comments maintain that because *Anastrepha* fruit flies did infest Hass avocados during these tests, the host status of Hass avocados is confirmed.

We agree that the induced infestation research was limited in scope and did not prove Hass avocado to be a non-host for *Anastrepha* fruit flies. However, we do not agree that the infestation that did occur during the testing proves Hass avocados to be preferred hosts. Under artificial laboratory conditions, females of some *Anastrepha* species, including *A. ludens*, will oviposit in almost any fruit available, or even in wax spheres (Norrbom, Allen L., and Ke Chung Kim, ''A List of the Reported Host Plants of the Species of *Anastrepha* (Diptera: Tephritidae),'' APHIS, 1988). Moreover, other evidence indicates that Hass avocados are non-preferred hosts while on the tree. In the cage studies conducted in the field by Sanidad Vegetal, which we feel were conducted properly, Hass avocados on the tree were shown to be non-preferred hosts to *Anastrepha*. Also, APHIS records from interceptions of avocados smuggled into the United States from Mexico indicate that the Hass avocado is a non-preferred host to *Anastrepha*. In fact, according to APHIS and Agricultural Research Service records, *Anastrepha* fruit flies have never been found in Hass avocados outside of laboratory tests. We are confident that the phytosanitary measures we are proposing would prevent infested Hass avocado fruit from being exported from Michoacan into the United States.

Several of the comments claim that the fruit fly trapping conducted in 1993 by Sanidad Vegetal was inadequate to accurately determine fruit fly populations in production areas in Michoacan and subsequently develop effective pest mitigation measures based on the population data. These comments maintain that:

- Traps were not moved frequently enough or maintained correctly;
- Trapping was conducted for too short a duration;
- Trapping density was too low, especially considering that the McPhail trap was used;
- Some trapping was conducted while trees were being sprayed with methyl parathion, thus distorting trapping results, as populations in sprayed areas would be unnaturally low; and
- No trapping was conducted with regard to wild or alternative commercial hosts.

We agree that the trapping conducted by Sanidad Vegetal in 1993 was flawed in its execution; many traps were neither moved often enough nor maintained properly. Initial quality control problems occur in most trapping programs. If we allow the importation of Hass avocados from Michoacan, we will require trapping year-round. We would hold such trapping to a higher quality standard and monitor its execution. Also, we believe that the trapping conducted by Sanidad Vegetal, although it was conducted imperfectly and for a short duration, does provide valuable preliminary data regarding the population of *Anastrepha* fruit flies in avocado production areas in Michoacan.

The density of the 1993 trapping—one McPhail trap per 10 hectares—is standard for population monitoring and was approved by APHIS prior to the trapping. Trapping at this rate is currently required by APHIS in Sonora, Mexico, to maintain the fruit-fly free zone in that State. We are proposing that Sanidad Vegetal trap at the rate of 1 trap per 10 hectares throughout the year and that this trapping be monitored by APHIS.

Some trapping was conducted while trees were being treated with pesticides. However, since this sort of pesticide treatment is routine in Michoacan, and since similar pesticide treatment would occur in orchards growing avocados for export to the United States, we believe that trapping conducted during or after pesticide treatment provided accurate population data.

We agree that Sanidad Vegetal did not conduct trapping with regard to wild or alternative commercial hosts. However, our interest in the 1993 Sanidad Vegetal study is to determine populations in the production areas, not in areas where wild or alternative hosts were being grown.

Because of our reservations concerning Sanidad Vegetal's 1993 fruit fly trapping, we have proposed to allow the Hass avocados from Michoacan to be imported only between November and February, when temperatures in Michoacan significantly lower the level of fruit fly activity.

Several comments expressed concerns that Sanidad Vegetal studies of the pests *Heilipus lauri, Stenoma catenifer, Conotrachelus perseae, C. aguacatae,* and *Copturus aguacatae* did not attempt to identify their seasonal abundance or geographical distribution in Michoacan. Furthermore, the comments claim that Sanidad Vegetal surveys for these pests in Hass avocado production areas in Michoacan were too limited to produce meaningful results, were not supervised by APHIS, and were not conducted carefully, that is, the surveys were not conducted in accord with scientific standards or in the context of pest biology. Finally, the comments maintain that the data reflect significant finds of these pests in production areas.

We believe that the design of the 1993 pest surveys was appropriate for detecting infestation and that Sanidad Vegetal took pest biology into account while conducting the surveys. Data from these surveys is of varying quality, but we believe inconsistencies are indicative of authentic pest survey data. While we did not supervise the surveys, we did observe several as they were being conducted.

It is important to remember that the phytosanitary requirements we propose to place on the avocado imports from Michoacan are not based solely upon the pest surveys and other studies conducted by Sanidad Vegetal in 1993. Much of their findings were of a limited quality and only supplement the data we have used in developing this proposal. If this proposal is finalized, we will monitor closely the pest surveys we are proposing to require for determining municipality and orchard freedom from the avocado pests.

Several comments raised concerns that the Sanidad Vegetal studies did not address risks presented by *Anastrepha distincta, A. leptozona, or A. obliqua,* or several other possible pests of avocados known to inhabit Mexico. Avocado is not a host to these other pests (Norrbom, Allen L., and Ke Chung Kim, ''A List of the Reported Host Plants of the Species of *Anastrepha* [Diptera: Tephritidae],'' APHIS, 1988).

Other comments argue that APHIS should not allow Hass avocado imports from Michoacan until Sanidad Vegetal can establish Michoacan as a pest-free zone.

As explained above, APHIS uses systems approaches to phytosanitary security to allow fruits and vegetables to be imported safely into the United States from countries that are not free of certain plant pests. APHIS has successfully used systems approaches to establish conditions for the importation of several commodities, including Unshu oranges from Japan, tomatoes from Spain, and peppers from Israel. APHIS also uses systems approaches to establish conditions whereby domestic fruits and vegetables may be exported from areas in the United States that are not free of certain plant pests, such as citrus fruit from Florida and Texas, apples from Washington, and stonefruit from California. We now are proposing to use a systems approach to allow Hass avocado fruit to be imported into the northeastern United States from Michoacan, Mexico, an area where fruit flies and certain avocado pests are known to exist. We believe this systems approach would prevent the introduction of plant pests into the United States from Michoacan and that therefore, it is unnecessary to establish

Michoacan as a pest-free zone prior to importing Hass avocados.

Several comments maintain that prior to allowing the importation of Hass avocados from Mexico, APHIS should develop treatments able to eliminate all exotic pests from avocado fruit at a ''probit 9'' mortality level. (A treatment yielding a probit 9 mortality effects a 99.9968 percent mortality in a population of live organisms, that is, a population of pests in fruit.)

Currently, there is no effective treatment for eliminating *Anastrepha* fruit flies or any of the avocado pests of concern from Hass avocado fruit. We believe the multiple safeguards that we are proposing for the importation of Hass avocados from Michoacan, Mexico, into the northeastern United States would mitigate pest risk at a level equivalent to that provided by a treatment yielding a probit 9 mortality. If a treatment for Hass avocado fruit from Michoacan were developed, APHIS would consider its use.

One comment criticized the conclusion drawn by Sanidad Vegetal that a 1993–1994 orchard and packinghouse fruit sampling research study indicated that there was zero risk of live immature stages of fruit flies entering the United States in Hass avocados. We agree that such a conclusion is unsupported by statistical analysis, since it is statistically impossible to prove zero risk for any commodity. Accordingly, this proposed rule contains no provisions that are based on an assumption of zero risk regarding the possibility of live immature stages of fruit flies entering the United States in Hass avocados.

One comment concluded that APHIS must prove Hass avocados to be non-hosts to *Anastrepha* fruit flies before we allow their importation from Michoacan.

As stated above, we believe Hass avocados to be a non-preferred host to *Anastrepha* fruit flies while on the tree and better hosts following harvest. The phytosanitary requirements we are proposing, especially in light of the Hass avocado's poor host status, would prevent *Anastrepha* flies from being introduced into the United States through the importation of Hass avocados.

One comment states that Sanidad Vegetal's conclusions regarding a correlation between maturity of Hass avocado fruit (measured by the percent of dry matter) and fruit immunity to *Anastrepha* fruit fly infestation are invalid.

We agree that Sanidad Vegetal research did not prove that there is a correlation between dry matter content of Hass avocados and immunity to *Anastrepha* infestation. The APHIS avocado interception records and past research mentioned above do indicate, however, that the Hass avocado may have some natural physiological resistance to infestation by *Anastrepha* fruit flies. Further research must be conducted before any such conclusions can be applied to the quarantine status of Hass avocados from Michoacan.

One comment expresses concerns that pests known to attack Hass avocados in Mexico could be introduced into the northeastern United States through importation from Michoacan, colonize the area, and damage fruit crops grown there.

We are proposing to allow Hass avocados to be imported into the Northeastern United States only during the winter, from November through February. The cold temperatures during these months would preclude colonization by these tropical and subtropical pests, because they could not survive under the climatic conditions and/or because there would be no host material.

Several comments state that avocado growers in Michoacan use pesticides not approved for use on avocados in the United States, such as methyl parathion, and that avocados imported from Michoacan containing residues of these pesticides would, therefore, be prohibited from importation.

The United States Food and Drug Administration samples and tests imported fruits and vegetables for pesticide residues. If residue of a pesticide unapproved in the United States is found in a shipment of imported fruit or vegetables, the shipment is denied entry into the United States.

Many of the comments argue that APHIS lacks the resources to enforce phytosanitary restrictions on Hass avocado imports from Michoacan, particularly restrictions on the distribution of Mexican Hass avocados within the United States.

We agree that adequate resources and personnel, especially inspectors, would have to be devoted to prevent the introduction of avocado and other plant pests into the United States. Adjustments in the level of personnel and resources devoted to APHIS programs are a normal part of management in the agency. Duties and staffing levels would be adjusted, in Michoacan, at ports, and elsewhere, to satisfy the needs of a new avocado import program. While APHIS would assign some additional personnel to monitor trapping and surveys and compliance with phytosanitary requirements in Michoacan orchards and packinghouses, we believe much of the resources needed for this program are already in place, in the form of existing APHIS overseas and port personnel. Funding levels and agency personnel may vary from year to year. Import authorizations would not be provided if the level of resources decreases below the level needed to ensure that all imported regulated articles are subject to the level of inspection and monitoring necessary to prevent the introduction of plant pests into the United States. In terms of enforcing the restrictions on the distribution of Mexican Hass avocados within the United States, APHIS would be assisted by the Fruit and Vegetable Division of the Agricultural Marketing Service, which has agreed to notify us if Mexican avocado fruit, which they would grade, showed up at terminal markets in prohibited States.

One comment criticizes the Sanidad Vegetal proposal to have growers hire the technical personnel involved in surveys and trapping, citing a conflict of interests.

As explained above, we would not allow growers to hire or supervise the technical personnel involved in trapping or pest surveys, but they would be allowed to pay expenses.

Several comments question Sanidad Vegetal's claim that *Anastrepha* fruit flies have never infested Hass avocados in Mexico and that *Anastrepha* fruit flies have never been intercepted in Hass avocados intended for export.

According to APHIS and Agricultural Research Service records, *Anastrepha* fruit flies have never been found in Hass avocados outside of laboratory tests, in which infestation was artificially induced.

Executive Order 12866 and Regulatory Flexibility Act

This proposed rule has been reviewed under Executive Order 12866. The rule has been determined to be not significant for purposes of Executive Order 12866, and, therefore, has not been reviewed by the Office of Management and Budget.

In accordance with 5 U.S.C. 603, we have performed an Initial Regulatory Flexibility Analysis, which is set out below, regarding the impact of this rule on small entities. However, we do not currently have all the data necessary for a comprehensive analysis of the effects of this rule on small entities. Therefore, we are inviting comments concerning potential effects. In particular, we are interested in determining the number and kind of small entities that may

incur benefits or costs from implementation of this proposed rule.

Under the Plant Quarantine Act and the Federal Plant Pest Act (7 U.S.C. 150dd, 150ee, 150ff, 151–167), the Secretary of Agriculture is authorized to regulate the importation of fruits and vegetables to prevent the introduction of injurious plant pests.

We are proposing to amend the regulations governing the importation of fruits and vegetables to allow fresh Hass avocado fruit grown in approved orchards in approved municipalities in Michoacan, Mexico, to be imported into certain areas of the United States, subject to certain conditions.

Mexico is the largest producer of avocados in the world, accounting for approximately 45 percent of total production. Mexican growers produced about 696,000 tons of avocados in 1990. Additionally, Mexico is the world's largest consumer of avocados; per capita consumption is close to 17 pounds. Because of this large domestic demand, exports remain small, at approximately 3 percent of production, or 20,880 tons.

Most of the avocado production in Mexico occurs in the state of Michoacan, where approximately 77 percent of the total crop is grown. Ninety-five percent of the avocados grown in Michoacan are of the Hass variety. In 1990, therefore, the total export of Hass variety avocados from Michoacan was approximately 15,000 tons.

In comparison, domestic growers produced 151,650 tons of avocados in 1993; California growers produced approximately 97 percent (147,000 tons), Florida growers produced a little less than 3 percent (4,400 tons), and Hawaiian growers produced less than 1 percent (250 tons) of the 1993 total. In Florida and Hawaii non-Hass varieties are predominant, while in California the Hass variety accounts for approximately 85 percent of the total production.

Although Mexico has well established export markets in Europe, Japan, and Canada, shipping avocados to these markets involves traversing great distances, thus incurring high transportation costs. As in Mexico, a substantial proportion of U.S. production of avocados is consumed internally. In 1993 the United States exported 15,292 tons, while it imported 8,232 tons. However, the U.S. per capita consumption, which is approximately 1.36 pounds, is much smaller than the per capita consumption in Mexico. The demand for avocados in the United States is inelastic (-0.48). In other words, a reduction in the price of avocados would not result in a proportionate increase in the purchase of avocados. For example, a 10 percent decline in avocado price would likely induce only a 4.8 percent increase in avocado consumption. In the case of avocados, quality considerations might have greater impact on consumer purchase decisions than the price of the product.

As the preceding paragraphs indicate, both California and Michoacan are large producers of Hass variety avocados. However, here the similarity between the two states ceases, with marked differences in avocado price, cost structure, and expansion capacity. The weighted average wholesale price for California production was $0.48 per pound between 1991 and 1993 while the Michoacan price was $0.28. Land and labor costs are much lower in Michoacan than in California. Development costs and costs of caring for avocado-bearing trees average $26,000 per acre in California, those same costs are only about $8,000 per acre in Michoacan. Furthermore, the labor share of production costs is 52 percent in California, while the average labor share is only 35 percent in Michoacan. Finally, the two states differ in their capacity to expand production. California has little or no non-bearing acreage remaining while Michoacan has 30 percent non-bearing acreage.

Michoacan producers face three additional costs in order to deliver their products to the U.S. border. These include the cost of transportation ($0.03 per pound), the border crossing cost ($0.027 per pound), and a tariff rate of $0.054 per pound. Taking these factors into consideration, the break-even point for California production is $0.48 (the average wholesale price per pound in California); Michoacan Hass avocados could be delivered to the U.S. border for $0.34 (the price of avocado sold domestically in Mexico ($0.23 per pound) plus the cost of placing Michoacan avocados at the U.S. border ($0.11 per pound). Thus, at the U.S. border the Mexican producers would have a cost advantage over U.S. Hass avocado producers. However, which of these two would gain the market for avocados in the 20 northeastern States would depend on their respective ability to deliver the best quality avocado in the most efficient way.

Allowing the importation of fresh Hass avocado fruit from Michoacan, Mexico, would directly affect avocado growers, mainly in California. There were 7,300 avocado growers in the United States in 1993, most of which were located in California. Of these, 6,729 are considered to be small entities. The importation of Hass avocados from Mexico would likely increase the U.S. supply of fresh avocados by about 12 percent, reducing the average price for U.S. avocados to about $0.42 per lb. The U.S. producers would thus be negatively affected. However, current Interstate Commerce Commission regulations forbid Mexican carriers from hauling the product beyond the border zone, so there would be some benefit to small U.S. specialized transport companies and brokerage houses. At present, the cost of transporting a truckload (40,000 lb) of avocados from Michoacan to the U.S. border at El Paso is $1,080. This includes the margin for truckers and brokerage houses. The number of these entities is difficult to determine at this time. The total impact would depend upon the volume of export from Michoacan to the United States. Finally, even with the low elasticity of demand for avocado, consumers could be positively affected by the increased competition and expanded choices that would be induced by this proposal.

The alternative to this proposed rule was to make no changes in the fruits and vegetables regulations. After consideration, we rejected this alternative since there appeared to be no pest risk reason to maintain the prohibition on the avocados in light of the safeguards that would be applied to their importation.

This proposed rule contains no paperwork or recordkeeping requirements.

Executive Order 12778

This proposed rule would allow fresh Hass avocado fruit to be imported into the United States from the Mexican State of Michoacan. If this proposed rule is adopted, State and local laws and regulations regarding fresh Hass avocado fruit imported under this rule would be preempted while the fruit is in foreign commerce. Fresh avocados are generally imported for immediate distribution and sale to the consuming public, and would remain in foreign commerce until sold to the ultimate consumer. The question of when foreign commerce ceases in other cases must be addressed on a case-by-case basis. If this proposed rule is adopted, no retroactive effect will be given to this rule, and this rule will not require administrative proceedings before parties may file suit in court challenging this rule.

Paperwork Reduction Act

This document contains no new information or recordkeeping requirements under the Paperwork Reduction Act of 1980 (44 U.S.C. 3501 *et seq.*).

List of Subjects in 7 CFR Part 319

Bees, Coffee, Cotton, Fruits, Honey, Imports, Nursery Stock, Plant diseases and pests, Quarantine, Reporting and recordkeeping requirements, Rice, Vegetables.

Accordingly, 7 CFR part 319 would be amended as follows:

PART 319—FOREIGN QUARANTINE NOTICES

1. The authority citation for part 319 would continue to read as follows:

Authority: 7 U.S.C. 150dd, 150ee, 150ff, 151–167; 7 CFR 2.17, 2.51, and 371.2(c), unless otherwise noted.

2. A new § 319.56–2ff would be added to read as follows:

§ 319.56–2ff Administrative instructions governing movement of Hass avocados from Mexico to the northeastern United States.

Fresh Hass variety avocados (*Persea americana*) may be imported from Mexico into the United States for distribution in the northeastern United States only under a permit issued in accordance with § 319.56–4, and only under the following conditions:

(a) *Shipping restrictions.* (1) The avocados may be imported in commercial shipments only;

(2) The avocados may be imported only during the months of November, December, January, and February; and

(3) The avocados may be distributed only in the following northeastern States: Connecticut, Delaware, the District of Columbia, Illinois, Indiana, Kentucky, Maine, Maryland, Massachusetts, Michigan, New Hampshire, New Jersey, New York, Ohio, Pennsylvania, Rhode Island, Vermont, Virginia, West Virginia, and Wisconsin.

(b) *Trust fund agreement.* The avocados may be imported only if the Mexican avocado industry association representing Mexican avocado growers, packers, and exporters has entered into a trust fund agreement with APHIS for that shipping season. That agreement requires the Mexican avocado industry association to pay in advance all estimated costs that APHIS expects to incur through its involvement in the trapping, survey, harvest, and packinghouse operations prescribed in paragraph (c) of this section. These costs will include administrative expenses incurred in conducting the services and all salaries (including overtime and the Federal share of employee benefits), travel expenses (including per diem expenses), and other incidental expenses incurred by the inspectors in performing these services. The agreement requires the Mexican avocado industry association to deposit a certified or cashier's check with APHIS for the amount of those costs, as estimated by APHIS. If the deposit is not sufficient to meet all costs incurred by APHIS, the agreement further requires the Mexican avocado industry association to deposit with APHIS a certified or cashier's check for the amount of the remaining costs, as determined by APHIS, before the services will be completed. After a final audit at the conclusion of each shipping season, any overpayment of funds would be returned to the Mexican avocado industry association or held on account until needed.

(c) *Safeguards in Mexico.* The avocados must have been grown in the Mexican State of Michoacan in an orchard located in a municipality that meets the requirements of paragraph (c)(1) of this section. The orchard in which the avocados are grown must meet the requirements of paragraph (c)(2) of this section. The avocados must be packed for export to the United States in a packinghouse that meets the requirements of paragraph (c)(3) of this section. Sanidad Vegetal must provide an annual work plan to APHIS that details the activities that Sanidad Vegetal will carry out to meet the requirements of this section; APHIS will be directly involved with Sanidad Vegetal in the monitoring and supervision of those activities. The personnel conducting the trapping and pest surveys must be hired, trained, and supervised by Sanidad Vegetal.

(1) *Municipality requirements.* (i) The municipality must be listed as an approved municipality in the annual work plan provided to APHIS by Sanidad Vegetal.

(ii) The municipality must be surveyed at least annually and found to be free from the large avocado seed weevil *Heilipus lauri*, the avocado seed moth *Stenoma catenifer*, and the small avocado seed weevils *Conotrachelus persea* and *C. aguacatae*. The survey must cover at least 300 hectares in the municipality and include portions of each registered orchard and areas with wild or backyard avocado trees. The survey must be conducted during the growing season and completed prior to the harvest of the avocados.

(iii) Trapping must be conducted in the municipality for Mediterranean fruit fly (Medfly) (*Ceratitis capitata*) at the rate of 1 trap per 1 to 4 square miles. Any findings of Medfly must be reported to APHIS.

(2) *Orchard and grower requirements.* The orchard and the grower must be registered with Sanidad Vegetal's avocado export program and must be listed as an approved orchard or an approved grower in the annual work plan provided to APHIS by Sanidad Vegetal. The operations of the orchard must meet the following conditions:

(i) The orchard and all contiguous orchards and properties must be surveyed annually and found to be free from the avocado stem weevil *Copturus aguacatae*. The survey must be conducted during the growing season and completed prior to the harvest of the avocados.

(ii) Trapping must be conducted in the orchard for the fruit flies *Anastrepha ludens*, *A. serpentina*, and *A. striata* at the rate of one trap per 10 hectares. If one fruit fly is trapped, at least 10 additional traps must be deployed in a 50-hectare area immediately surrounding the trap in which the fruit fly was found. If within 30 days of the first finding any additional fruit flies are trapped within the 260-hectare area surrounding the first finding, malathion bait treatments must be applied in the affected orchard in order for the orchard to remain eligible to export avocados.

(iii) Avocado fruit that has fallen from the trees must be removed from the orchard prior to harvest and may not be included in field boxes of fruit to be packed for export.

(iv) Dead branches on avocado trees in the orchard must be pruned and removed from the orchard.

(v) Harvested avocados must be placed in field boxes or containers of field boxes that are marked to show the Sanidad Vegetal registration number of the orchard. The avocados must be moved from the orchard to the packinghouse within 3 hours of harvest or they must be protected from fruit fly infestation until moved.

(vi) The avocados must be protected from fruit fly infestation during their movement from the orchard to the packinghouse and must be accompanied by a field record indicating that the avocados originated from a certified orchard.

(3) *Packinghouse requirements.* The packinghouse must be registered with Sanidad Vegetal's avocado export program and must be listed as an approved packinghouse in the annual work plan provided to APHIS by Sanidad Vegetal. The operations of the packinghouse must meet the following conditions:

(i) During the time the packinghouse is used to prepare avocados for export to the United States, the packinghouse may accept fruit only from orchards certified by Sanidad Vegetal for participation in the avocado export program.

(ii) All openings to the outside must be covered by screening with openings of not more than 1.6 mm or by some other barrier that prevents insects from entering the packinghouse.

(iii) The packinghouse must have double doors at the entrance to the facility and at the interior entrance to the area where the avocados are packed.

(iv) Prior to the culling process, a sample of 250 avocados per shipment must be selected, cut, and inspected by Sanidad Vegetal and found free from pests.

(v) The identity of the avocados must be maintained from field boxes or containers to the shipping boxes so the avocados can be traced back to the orchard in which they were grown if pests are found at the packinghouse or the port of first arrival in the United States.

(vi) The avocados must be packed in clean, new boxes. The boxes must be clearly marked with the identity of the grower, packinghouse, and exporter, and the statement ''Distribution limited to the following States: CT, DC, DE, IL, IN, KY, ME, MD, MA, MI, NH, NJ, NY, OH, PA, RI, VA, VT, WV, and WI.''

(vii) The boxes must be placed in a refrigerated truck or refrigerated container and remain in that truck or container while in transit through Mexico to the port of first arrival in the United States. Prior to leaving the packinghouse, the truck or container must be secured by Sanidad Vegetal with a seal that will be broken when the truck or container is opened.

(viii) Any avocados that have not been packed or loaded into a refrigerated truck or refrigerated container by the end of the work day must be kept in the screened packing area.

(d) *Certification.* All shipments of avocados must be accompanied by a phytosanitary certificate issued by Sanidad Vegetal certifying that the conditions specified in this section have been met.

(e) *Pest detection.* (1) If any of the avocado seed pests *Heilipus lauri, Conotrachelus perseae, C. aguacatae,* or *Stenoma catenifer* are discovered in a municipality during an annual pest survey, orchard survey, packinghouse inspection, or other monitoring or inspection activity in the municipality, Sanidad Vegetal must immediately initiate an investigation and take measures to isolate and eradicate the pests. Sanidad Vegetal must also provide APHIS with information regarding the circumstances of the infestation and the pest risk mitigation measures taken. The municipality in which the pests are discovered will lose its pest-free certification and avocado exports from that municipality will be suspended until APHIS and Sanidad Vegetal agree that the pest eradication measures taken have been effective and that the pest risk within that municipality have been eliminated.

(2) If Sanidad Vegetal discovers the stem weevil *Copturus aguacatae* in an orchard during an orchard survey or other monitoring or inspection activity in the orchard, Sanidad Vegetal must provide APHIS with information regarding the circumstances of the infestation and the pest risk mitigation measures taken. The orchard in which the pest was found will lose its export certification immediately and will be denied export certification for the entire shipping season of November through February.

(3) If Sanidad Vegetal discovers the stem weevil *Copturus aguacatae* in fruit at a packinghouse, Sanidad Vegetal must investigate the origin of the infested fruit and provide APHIS with information regarding the circumstances of the infestation and the pest risk mitigation measures taken. The orchard where the infested fruit originated will lose its export certification immediately and will be denied export certification for the entire shipping season of November through February.

(f) *Ports.* The avocados may enter the United States at:

(1) Any port located in the northeastern States specified in paragraph (a)(3) of this section;

(2) The ports of Galveston or Houston, TX, or the border ports of Nogales, AZ, or Brownsville, Eagle Pass, El Paso, Hidalgo, or Laredo, TX; or

(3) Other ports within that area of the United States specified in paragraph (g) of this section.

(g) *Shipping areas.* Except as explained below for avocados that enter the United States at Nogales, AZ, avocados moved by truck or rail car may transit only that area of the United States bounded on the west by a line extending from El Paso, TX, to Denver, CO, and due north from Denver; and on the east and south by a line extending from Brownsville, TX, to Galveston, TX, to Kinder, LA, to Memphis, TN, to Knoxville, TN, following Interstate 40 to Raleigh, NC, and due east from Raleigh. All cities on these boundary lines are included in this area. If the avocados are moved by air, the aircraft may not land outside this area. Avocados that enter the United States at Nogales, AZ, must be moved to El Paso, TX, by the route specified on the permit, and then must remain within the shipping area described above.

(h) *Shipping requirements.* The avocados must be moved through the United States either by air or in a refrigerated truck or refrigerated rail car or in refrigerated containers on a truck or rail car. If the avocados are moved in refrigerated containers on a truck or rail car, an inspector must seal the containers with a serially numbered seal at the port of first arrival in the United States. If the avocados are moved in a refrigerated truck or a refrigerated rail car, an inspector must seal the truck or rail car with a serially numbered seal at the port of first arrival in the United States. If the avocados are transferred to another vehicle or container in the United States, an inspector must be present to supervise the transfer and must apply a new serially numbered seal. The avocados must be moved through the United States under Customs bond.

(i) *Inspection.* The avocados are subject to inspection by an inspector at the port of first arrival, at any stops in the United States en route to the northeastern States, and upon arrival at the terminal market in the northeastern States. At the port of first arrival, an inspector will sample and cut avocados from each shipment to detect pest infestation.

Done in Washington, DC, this 29th day of June 1995.

Lonnie J. King,

Acting Administrator, Animal and Plant Health Inspection Service.

[FR Doc. 95–16405 Filed 6–30–95; 8:45 am]

BILLING CODE 3410–34–P

Reader Aids

Federal Register

Vol. 60, No. 127

Monday, July 3, 1995

INFORMATION AND ASSISTANCE

Federal Register

Index, finding aids & general information	**202–523–5227**
Public inspection announcement line	**523–5215**
Corrections to published documents	**523–5237**
Document drafting information	**523–3187**
Machine readable documents	**523–4534**

Code of Federal Regulations

Index, finding aids & general information	**523–5227**
Printing schedules	**523–3419**

Laws

Public Laws Update Service (numbers, dates, etc.)	**523–6641**
Additional information	**523–5230**

Presidential Documents

Executive orders and proclamations	**523–5230**
Public Papers of the Presidents	**523–5230**
Weekly Compilation of Presidential Documents	**523–5230**

The United States Government Manual

General information	**523–5230**

Other Services

Data base and machine readable specifications	**523–4534**
Guide to Record Retention Requirements	**523–3187**
Legal staff	**523–4534**
Privacy Act Compilation	**523–3187**
Public Laws Update Service (PLUS)	**523–6641**
TDD for the hearing impaired	**523–5229**

ELECTRONIC BULLETIN BOARD

Free **Electronic Bulletin Board** service for Public Law numbers, Federal Register finding aids, and list of documents on public inspection. **202–275–0920**

FAX-ON-DEMAND

You may access our Fax-On-Demand service. You only need a fax machine and there is no charge for the service except for long distance telephone charges the user may incur. The list of documents on public inspection and the daily Federal Register's table of contents are available using this service. The document numbers are 7050-Public Inspection list and 7051-Table of Contents list. The public inspection list will be updated immediately for documents filed on an emergency basis.
NOTE: YOU WILL ONLY GET A LISTING OF DOCUMENTS ON FILE AND NOT THE ACTUAL DOCUMENT. Documents on public inspection may be viewed and copied in our office located at 800 North Capitol Street, N.W., Suite 700. The Fax-On-Demand telephone number is: **301–713–6905**

FEDERAL REGISTER PAGES AND DATES, JULY

34453–34842.....3

CFR PARTS AFFECTED DURING JULY

At the end of each month, the Office of the Federal Register publishes separately a List of CFR Sections Affected (LSA), which lists parts and sections affected by documents published since the revision date of each title.

CFR CHECKLIST

This checklist, prepared by the Office of the Federal Register, is published weekly. It is arranged in the order of CFR titles, stock numbers, prices, and revision dates.

An asterisk (*) precedes each entry that has been issued since last week and which is now available for sale at the Government Printing Office.

A checklist of current CFR volumes comprising a complete CFR set, also appears in the latest issue of the LSA (List of CFR Sections Affected), which is revised monthly.

The annual rate for subscription to all revised volumes is $883.00 domestic, $220.75 additional for foreign mailing.

Mail orders to the Superintendent of Documents, Attn: New Orders, P.O. Box 371954, Pittsburgh, PA 15250–7954. All orders must be accompanied by remittance (check, money order, GPO Deposit Account, VISA, or Master Card). Charge orders may be telephoned to the GPO Order Desk, Monday through Friday, at **(202) 512–1800** from 8:00 a.m. to 4:00 p.m. eastern time, or FAX your charge orders to **(202) 512-2233**.

Title	Stock Number	Price	Revision Date
1, 2 (2 Reserved)	(869–026–00001–8)	$5.00	Jan. 1, 1995
3 (1994 Compilation and Parts 100 and 101)	(869–026–00002–6)	40.00	[1] Jan. 1, 1995
4	(869–026–00003–4)	5.50	Jan. 1, 1995
5 Parts:			
1–699	(869–026–00004–2)	23.00	Jan. 1, 1995
700–1199	(869–026–00005–1)	20.00	Jan. 1, 1995
1200–End, 6 (6 Reserved)	(869–026–00006–9)	23.00	Jan. 1, 1995
7 Parts:			
0–26	(869–026–00007–7)	21.00	Jan. 1, 1995
27–45	(869–026–00008–5)	14.00	Jan. 1, 1995
46–51	(869–026–00009–3)	21.00	Jan. 1, 1995
52	(869–026–00010–7)	30.00	Jan. 1, 1995
53–209	(869–026–00011–5)	25.00	Jan. 1, 1995
210–299	(869–026–00012–3)	34.00	Jan. 1, 1995
300–399	(869–026–00013–1)	16.00	Jan. 1, 1995
400–699	(869–026–00014–0)	21.00	Jan. 1, 1995
700–899	(869–026–00015–8)	23.00	Jan. 1, 1995
900–999	(869–026–00016–6)	32.00	Jan. 1, 1995
1000–1059	(869–026–00017–4)	23.00	Jan. 1, 1995
1060–1119	(869–026–00018–2)	15.00	Jan. 1, 1995
1120–1199	(869–026–00019–1)	12.00	Jan. 1, 1995
1200–1499	(869–026–00020–4)	32.00	Jan. 1, 1995
1500–1899	(869–026–00021–2)	35.00	Jan. 1, 1995
1900–1939	(869–026–00022–1)	16.00	Jan. 1, 1995
1940–1949	(869–026–00023–9)	30.00	Jan. 1, 1995
1950–1999	(869–026–00024–7)	40.00	Jan. 1, 1995
2000–End	(869–026–00025–5)	14.00	Jan. 1, 1995
8	(869–026–00026–3)	23.00	Jan. 1, 1995
9 Parts:			
1–199	(869–026–00027–1)	30.00	Jan. 1, 1995
200–End	(869–026–00028–0)	23.00	Jan. 1, 1995
10 Parts:			
0–50	(869–026–00029–8)	30.00	Jan. 1, 1995
51–199	(869–026–00030–1)	23.00	Jan. 1, 1995
200–399	(869–026–00031–0)	15.00	[6] Jan. 1, 1993
400–499	(869–026–00032–8)	21.00	Jan. 1, 1995
500–End	(869–026–00033–6)	39.00	Jan. 1, 1995
11	(869–026–00034–4)	14.00	Jan. 1, 1995
12 Parts:			
1–199	(869–026–00035–2)	12.00	Jan. 1, 1995
200–219	(869–026–00036–1)	16.00	Jan. 1, 1995
220–299	(869–026–00037–9)	28.00	Jan. 1, 1995
300–499	(869–026–00038–7)	23.00	Jan. 1, 1995
500–599	(869–026–00039–5)	19.00	Jan. 1, 1995
600–End	(869–026–00040–9)	35.00	Jan. 1, 1995
13	(869–026–00041–7)	32.00	Jan. 1, 1995
14 Parts:			
1–59	(869–026–00042–5)	33.00	Jan. 1, 1995
60–139	(869–026–00043–3)	27.00	Jan. 1, 1995
140–199	(869–026–00044–1)	13.00	Jan. 1, 1995
200–1199	(869–026–00045–0)	23.00	Jan. 1, 1995
1200–End	(869–026–00046–8)	16.00	Jan. 1, 1995
15 Parts:			
0–299	(869–026–00047–6)	15.00	Jan. 1, 1995
300–799	(869–026–00048–4)	26.00	Jan. 1, 1995
800–End	(869–026–00049–2)	21.00	Jan. 1, 1995
16 Parts:			
0–149	(869–026–00050–6)	7.00	Jan. 1, 1995
150–999	(869–026–00051–4)	19.00	Jan. 1, 1995
1000–End	(869–026–00052–2)	25.00	Jan. 1, 1995
17 Parts:			
1–199	(869–022–00054–3)	20.00	Apr. 1, 1994
200–239	(869–022–00055–1)	23.00	Apr. 1, 1994
240–End	(869–022–00056–0)	30.00	Apr. 1, 1994
18 Parts:			
1–149	(869–026–00057–3)	16.00	Apr. 1, 1995
150–279	(869–026–00058–1)	13.00	Apr. 1, 1995
280–399	(869–026–00059–0)	13.00	Apr. 1, 1995
400–End	(869–022–00060–8)	11.00	Apr. 1, 1994
19 Parts:			
1–140	(869–026–00061–1)	25.00	April 1, 1995
*141–199	(869–026–00062–0)	21.00	Apr. 1, 1995
200–End	(869–026–00063–8)	12.00	Apr. 1, 1995
20 Parts:			
1–399	(869–026–00064–6)	20.00	Apr. 1, 1995
400–499	(869–022–00064–1)	34.00	Apr. 1, 1994
500–End	(869–026–00066–2)	34.00	Apr. 1, 1995
21 Parts:			
1–99	(869–022–00066–7)	16.00	Apr. 1, 1994
100–169	(869–022–00067–5)	21.00	Apr. 1, 1994
170–199	(869–026–00068–7)	22.00	Apr. 1, 1995
200–299	(869–026–00070–1)	7.00	Apr. 1, 1995
300–499	(869–026–00071–9)	39.00	Apr. 1, 1995
500–599	(869–022–00071–3)	16.00	Apr. 1, 1994
600–799	(869–022–00072–1)	8.50	Apr. 1, 1994
800–1299	(869–022–00073–0)	22.00	Apr. 1, 1994
1300–End	(869–026–00075–1)	13.00	Apr. 1, 1995
22 Parts:			
1–299	(869–022–00075–6)	32.00	Apr. 1, 1994
300–End	(869–026–00077–8)	24.00	Apr. 1, 1995
23	(869–022–00077–2)	21.00	Apr. 1, 1994
24 Parts:			
0–199	(869–022–00078–1)	36.00	Apr. 1, 1994
200–499	(869–022–00079–9)	38.00	Apr. 1, 1994
500–699	(869–022–00080–2)	20.00	Apr. 1, 1994
700–1699	(869–022–00081–1)	39.00	Apr. 1, 1994
1700–End	(869–026–00085–9)	17.00	Apr. 1, 1995
25	(869–026–00086–7)	32.00	Apr. 1, 1995
26 Parts:			
§§ 1.0-1–1.60	(869–026–00087–5)	21.00	Apr. 1, 1995
*§§ 1.61–1.169	(869–026–00088–3)	34.00	Apr. 1, 1995
§§ 1.170–1.300	(869–022–00086–1)	24.00	Apr. 1, 1994
§§ 1.301–1.400	(869–022–00087–0)	17.00	Apr. 1, 1994
§§ 1.401–1.440	(869–022–00088–8)	30.00	Apr. 1, 1994
§§ 1.441-1.500	(869-022-00089-6)	22.00	Apr. 1, 1994
§§ 1.501–1.640	(869–022–00090–0)	21.00	Apr. 1, 1994
§§ 1.641–1.850	(869–022–00091–8)	24.00	Apr. 1, 1994
§§ 1.851–1.907	(869–022–00092–6)	26.00	Apr. 1, 1994
§§ 1.908–1.1000	(869–022–00093–4)	27.00	Apr. 1, 1994
§§ 1.1001–1.1400	(869–022–00094–2)	24.00	Apr. 1, 1994
*§§ 1.1401–End	(869–026–00098–1)	33.00	Apr. 1, 1995
2–29	(869–022–00096–9)	24.00	Apr. 1, 1994
30–39	(869–022–00097–7)	18.00	Apr. 1, 1994
40–49	(869–022–00098–4)	14.00	Apr. 1, 1994
50–299	(869–026–00102–2)	14.00	Apr. 1, 1995
300–499	(869–022–00100–1)	24.00	Apr. 1, 1994

Title	Stock Number	Price	Revision Date
500–599	(869–026–00104–9)	6.00	[4] Apr. 1, 1990
600–End	(869–022–00102–7)	8.00	Apr. 1, 1994
27 Parts:			
1–199	(869–022–00103–5)	36.00	Apr. 1, 1994
200–End	(869–026–00107–3)	13.00	[8] Apr. 1, 1994
28 Parts:			
1-42	(869–022–00105–1)	27.00	July 1, 1994
43-end	(869-022-00106-0)	21.00	July 1, 1994
29 Parts:			
0–99	(869–022–00107–8)	21.00	July 1, 1994
100–499	(869–022–00108–6)	9.50	July 1, 1994
500–899	(869–022–00109–4)	35.00	July 1, 1994
900–1899	(869–022–00110–8)	17.00	July 1, 1994
1900–1910 (§§ 1901.1 to 1910.999)	(869–022–00111–6)	33.00	July 1, 1994
1910 (§§ 1910.1000 to end)	(869–022–00112–4)	21.00	July 1, 1994
1911–1925	(869–022–00113–2)	26.00	July 1, 1994
1926	(869–022–00114–1)	33.00	July 1, 1994
1927–End	(869–022–00115–9)	36.00	July 1, 1994
30 Parts:			
1–199	(869–022–00116–7)	27.00	July 1, 1994
200–699	(869–022–00117–5)	19.00	July 1, 1994
700–End	(869–022–00118–3)	27.00	July 1, 1994
31 Parts:			
0–199	(869–022–00119–1)	18.00	July 1, 1994
200–End	(869–022–00120–5)	30.00	July 1, 1994
32 Parts:			
1–39, Vol. I		15.00	[2] July 1, 1984
1–39, Vol. II		19.00	[2] July 1, 1984
1–39, Vol. III		18.00	[2] July 1, 1984
1–190	(869–022–00121–3)	31.00	July 1, 1994
191–399	(869–022–00122–1)	36.00	July 1, 1994
400–629	(869–022–00123–0)	26.00	July 1, 1994
630–699	(869–022–00124–8)	14.00	[5] July 1, 1991
700–799	(869–022–00125–6)	21.00	July 1, 1994
800–End	(869–022–00126–4)	22.00	July 1, 1994
33 Parts:			
1–124	(869–022–00127–2)	20.00	July 1, 1994
125–199	(869–022–00128–1)	26.00	July 1, 1994
200–End	(869–022–00129–9)	24.00	July 1, 1994
34 Parts:			
1–299	(869–022–00130–2)	28.00	July 1, 1994
300–399	(869–022–00131–1)	21.00	July 1, 1994
400–End	(869–022–00132–9)	40.00	July 1, 1994
35	(869–022–00133–7)	12.00	July 1, 1994
36 Parts:			
1–199	(869–022–00134–5)	15.00	July 1, 1994
200–End	(869–022–00135–3)	37.00	July 1, 1994
37	(869–022–00136–1)	20.00	July 1, 1994
38 Parts:			
0–17	(869–022–00137–0)	30.00	July 1, 1994
18–End	(869–022–00138–8)	29.00	July 1, 1994
39	(869–022–00139–6)	16.00	July 1, 1994
40 Parts:			
1–51	(869–022–00140–0)	39.00	July 1, 1994
52	(869–022–00141–8)	39.00	July 1, 1994
53–59	(869–022–00142–6)	11.00	July 1, 1994
60	(869-022-00143-4)	36.00	July 1, 1994
61–80	(869–022–00144–2)	41.00	July 1, 1994
81–85	(869–022–00145–1)	23.00	July 1, 1994
86–99	(869–022–00146–9)	41.00	July 1, 1994
100–149	(869–022–00147–7)	39.00	July 1, 1994
150–189	(869–022–00148–5)	24.00	July 1, 1994
190–259	(869–022–00149–3)	18.00	July 1, 1994
260–299	(869–022–00150–7)	36.00	July 1, 1994
300–399	(869–022–00151–5)	18.00	July 1, 1994
400–424	(869–022–00152–3)	27.00	July 1, 1994
425–699	(869–022–00153–1)	30.00	July 1, 1994
700–789	(869–022–00154–0)	28.00	July 1, 1994
790–End	(869–022–00155–8)	27.00	July 1, 1994
41 Chapters:			
1, 1–1 to 1–10		13.00	[3] July 1, 1984
1, 1–11 to Appendix, 2 (2 Reserved)		13.00	[3] July 1, 1984
3–6		14.00	[3] July 1, 1984
7		6.00	[3] July 1, 1984
8		4.50	[3] July 1, 1984
9		13.00	[3] July 1, 1984
10–17		9.50	[3] July 1, 1984
18, Vol. I, Parts 1–5		13.00	[3] July 1, 1984
18, Vol. II, Parts 6–19		13.00	[3] July 1, 1984
18, Vol. III, Parts 20–52		13.00	[3] July 1, 1984
19–100		13.00	[3] July 1, 1984
1–100	(869–022–00156–6)	9.50	July 1, 1994
101	(869–022–00157–4)	29.00	July 1, 1994
102–200	(869–022–00158–2)	15.00	July 1, 1994
201–End	(869–022–00159–1)	13.00	July 1, 1994
42 Parts:			
1–399	(869–022–00160–4)	24.00	Oct. 1, 1994
400–429	(869–022–00161–2)	26.00	Oct. 1, 1994
430–End	(869–022–00162–1)	36.00	Oct. 1, 1994
43 Parts:			
1–999	(869–022–00163–9)	23.00	Oct. 1, 1994
1000–3999	(869–022–00164–7)	31.00	Oct. 1, 1994
4000–End	(869–022–00165–5)	14.00	Oct. 1, 1994
44	(869–022–00166–3)	27.00	Oct. 1, 1994
45 Parts:			
1–199	(869–022–00167–1)	22.00	Oct. 1, 1994
200–499	(869–022–00168–0)	15.00	Oct. 1, 1994
500–1199	(869–022–00169–8)	32.00	Oct. 1, 1994
1200–End	(869–022–00170–1)	26.00	Oct. 1, 1994
46 Parts:			
1–40	(869–022–00171–0)	20.00	Oct. 1, 1994
41–69	(869–022–00172–8)	16.00	Oct. 1, 1994
70–89	(869–022–00173–6)	8.50	Oct. 1, 1994
90–139	(869–022–00174–4)	15.00	Oct. 1, 1994
140–155	(869–022–00175–2)	12.00	Oct. 1, 1994
156–165	(869–022–00176–1)	17.00	[7] Oct. 1, 1993
166–199	(869–022–00177–9)	17.00	Oct. 1, 1994
200–499	(869–022–00178–7)	21.00	Oct. 1, 1994
500–End	(869–022–00179–5)	15.00	Oct. 1, 1994
47 Parts:			
0–19	(869–022–00180–9)	25.00	Oct. 1, 1994
20–39	(869–022–00181–7)	20.00	Oct. 1, 1994
40–69	(869–022–00182–5)	14.00	Oct. 1, 1994
70–79	(869–022–00183–3)	24.00	Oct. 1, 1994
80–End	(869–022–00184–1)	26.00	Oct. 1, 1994
48 Chapters:			
1 (Parts 1–51)	(869–022–00185–0)	36.00	Oct. 1, 1994
1 (Parts 52–99)	(869–022–00186–8)	23.00	Oct. 1, 1994
2 (Parts 201–251)	(869–022–00187–6)	16.00	Oct. 1, 1994
2 (Parts 252–299)	(869–022–00188–4)	13.00	Oct. 1, 1994
3–6	(869–022–00189–2)	23.00	Oct. 1, 1994
7–14	(869–022–00190–6)	30.00	Oct. 1, 1994
15–28	(869–022–00191–4)	32.00	Oct. 1, 1994
29–End	(869–022–00192–2)	17.00	Oct. 1, 1994
49 Parts:			
1–99	(869–022–00193–1)	24.00	Oct. 1, 1994
100–177	(869–022–00194–9)	30.00	Oct. 1, 1994
178–199	(869–022–00195–7)	21.00	Oct. 1, 1994
200–399	(869–022–00196–5)	30.00	Oct. 1, 1994
400–999	(869–022–00197–3)	35.00	Oct. 1, 1994
1000–1199	(869–022–00198–1)	19.00	Oct. 1, 1994
1200–End	(869–022–00199–0)	15.00	Oct. 1, 1994
50 Parts:			
1–199	(869–022–00200–7)	25.00	Oct. 1, 1994
200–599	(869–022–00201–5)	22.00	Oct. 1, 1994
600–End	(869–022–00202–3)	27.00	Oct. 1, 1994
CFR Index and Findings Aids	(869–026–00053–1)	36.00	Jan. 1, 1995

Title	Stock Number	Price	Revision Date
Complete 1995 CFR set		883.00	1995
Microfiche CFR Edition:			
Complete set (one-time mailing)		188.00	1992
Complete set (one-time mailing)		223.00	1993
Complete set (one-time mailing)		244.00	1994
Subscription (mailed as issued)		264.00	1995
Individual copies		1.00	1995

[1] Because Title 3 is an annual compilation, this volume and all previous volumes should be retained as a permanent reference source.

[2] The July 1, 1985 edition of 32 CFR Parts 1–189 contains a note only for Parts 1–39 inclusive. For the full text of the Defense Acquisition Regulations in Parts 1–39, consult the three CFR volumes issued as of July 1, 1984, containing those parts.

[3] The July 1, 1985 edition of 41 CFR Chapters 1–100 contains a note only for Chapters 1 to 49 inclusive. For the full text of procurement regulations in Chapters 1 to 49, consult the eleven CFR volumes issued as of July 1, 1984 containing those chapters.

[4] No amendments to this volume were promulgated during the period Apr. 1, 1990 to Mar. 31, 1995. The CFR volume issued April 1, 1990, should be retained.

[5] No amendments to this volume were promulgated during the period July 1, 1991 to June 30, 1994. The CFR volume issued July 1, 1991, should be retained.

[6] No amendments to this volume were promulgated during the period January 1, 1993 to December 31, 1994. The CFR volume issued January 1, 1993, should be retained.

[7] No amendments to this volume were promulgated during the period October 1, 1993, to September 30, 1994. The CFR volume issued October 1, 1993, should be retained.

[8] No amendments to this volume were promulgated during the period April 1, 1994 to March 31, 1995. The CFR volume issued April 1, 1994, should be retained.

[9] Note: Title 19, CFR Parts 141-199, revised 4-1-95 volume is being republished to restore inadvertently omitted text.

CFR ISSUANCES 1995
January—July 1995 Editions and Projected October, 1995 Editions

This list sets out the CFR issuances for the January–July 1995 editions and projects the publication plans for the **October, 1995** quarter. A projected schedule that will include the **January, 1996** quarter will appear in the first **Federal Register** issue of October.

For pricing information on available 1994–1995 volumes consult the CFR checklist which appears every Monday in the Federal Register.

Pricing information is not available on projected issuances. The weekly CFR checklist and the monthly List of CFR Sections Affected will continue to provide a cumulative list of CFR titles and parts, revision date and price of each volume.

Normally, CFR volumes are revised according to the following schedule:

Titles 1–16—January 1
Titles 17–27—April 1
Titles 28–41—July 1
Titles 42–50—October 1

All volumes listed below will adhere to these scheduled revision dates unless a notation in the listing indicates a different revision date for a particular volume.

Titles revised as of January 1, 1995:

Title

CFR Index

1–2

3 (Compilation)

4

5 Parts:
1–699
700–1199
1200–End

6 [Reserved]

7 Parts:
0–26
27–45
46–51
52
53–209
210–299
300–399
400–699
700–899
900–999
1000–1059
1060–1119
1120–1199
1200–1499
1500–1899
1900–1939
1940–1949
1950–1999
2000–End

8

9 Parts:
1–199
200–End

10 Parts:
0–50
51–199
200–399 (Cover only)
400–499
500–End

11

12 Parts:
1–199
200–219
220–299
300–499
500–599
600–End

13

14 Parts:
1–59
60–139
140–199
200–1199
1200–End

15 Parts:
0–299
300–799
800–End

16 Parts:
0–149
150–999
1000–End

Titles revised as of April 1, 1995:

Title

17 Parts:
1–199
200–239
240–End

18 Parts:
1–149
150–279
280–399
400–End

19 Parts:
1–140
141–199
200–End

20 Parts:
1–399
400–499
500–End

21 Parts:
1–99
100–169
170–199
200–299
300–499
500–599
600–799
800–1299
1300–End

22 Parts:
1–299
300–End

23

24 Parts:
0–199
200–499
500–699
700–1699
1700–End

25

26 Parts:
1 (§§ 1.0-1–1.60)
1 (§§ 1.61–1.169)
1 (§§ 1.170–1.300)
1 (§§ 1.301–1.400)
1 (§§ 1.401–1.440)
1 (§§ 1.441–1.500)
1 (§§ 1.501–1.640)
1 (§§ 1.641–1.850)
1 (§§ 1.851–1.907)
1 (§§ 1.908–1.1000)
1 (§§ 1.1001–1.1400)
1 (§ 1.1401–End)
2–29
30–39
40–49
50–299
300–499
500–599 (Cover only)
600–End

27 Parts:
1–199
200–End (Cover only)

Titles revised as of July 1, 1995:

Title

28 Parts:
0–42
43–End

29 Parts:
0–99
100–499
500–899
900–1899
1900–1910 (§§ 1901.1–1910.999)
1910 (§§ 1910.1000–End)
1911–1925
1926
1927–End

30 Parts:
1–199
200–699
700–End

31 Parts:
0–199
200–End

32 Parts:
1–190
191–399
400–629
630–699 (Cover only)
700–799
800–End

33 Parts:
1–124
125–199
200–End

34 Parts:
1–299
300–399
400–End

35

36 Parts:
1–199
200–End

37

38 Parts:
0–17
18–End

39

40 Parts:
1–51
52
53–59
60
61–71
72–85
86
87–149
150–189
190–259
260–299
300–399
400–424
425–699
700–789
790–End

41 Parts:

Chs. 1–100
Ch. 101
Chs. 102–200
Ch. 201–End

Projected October 1, 1995 editions:

Title

42 Parts:
1–399
400–429
430–End

43 Parts:
1–999
1000–3999
4000–End

44

45 Parts:
1–199
200–499
500–1199
1200–End

46 Parts:
1–40
41–69
70–89
90–139
140–155
156–165
166–199
200–499
500–End

47 Parts:
0–19
20–39
40–69
70–79
80–End

48 Parts:
Ch. 1 (1–51)
Ch. 1 (52–99)
Ch. 2 (201–251)
Ch. 2 (252–299)
Chs. 3–6
Chs. 7–14
Ch. 15–28
Ch. 29–End

49 Parts:
1–99
100–177
178–199
200–399
400–999
1000–1199
1200–End

50 Parts:
1–199
200–599
600–End

TABLE OF EFFECTIVE DATES AND TIME PERIODS—JULY 1995

This table is used by the Office of the Federal Register to compute certain dates, such as effective dates and comment deadlines, which appear in agency documents. In computing these dates, the day after publication is counted as the first day.

When a date falls on a weekend or holiday, the next Federal business day is used. (See 1 CFR 18.17)

A new table will be published in the first issue of each month.

DATE OF FR PUBLICATION	15 DAYS AFTER PUBLICATION	30 DAYS AFTER PUBLICATION	45 DAYS AFTER PUBLICATION	60 DAYS AFTER PUBLICATION	90 DAYS AFTER PUBLICATION
July 3	July 18	August 2	August 17	September 1	October 2
July 5	July 20	August 4	August 21	September 5	October 3
July 6	July 21	August 7	August 21	September 5	October 4
July 7	July 24	August 7	August 21	September 5	October 5
July 10	July 25	August 9	August 24	September 8	October 10
July 11	July 26	August 10	August 25	September 11	October 10
July 12	July 27	August 11	August 28	September 11	October 10
July 13	July 28	August 14	August 28	September 11	October 11
July 14	July 31	August 14	August 28	September 12	October 12
July 17	August 1	August 16	August 31	September 15	October 16
July 18	August 2	August 17	September 1	September 18	October 16
July 19	August 3	August 18	September 5	September 18	October 17
July 20	August 4	August 21	September 5	September 18	October 18
July 21	August 7	August 21	September 5	September 19	October 19
July 24	August 8	August 23	September 7	September 22	October 23
July 25	August 9	August 24	September 8	September 25	October 23
July 26	August 10	August 25	September 11	September 25	October 24
July 27	August 11	August 28	September 11	September 25	October 25
July 28	August 14	August 28	September 11	September 26	October 26
July 31	August 15	August 30	September 14	September 29	October 30